Series AM15EW-NZ

15 Watt | DC-DC Converter

Picture coming soon

FEATURES:

- Efficiency up to 89%
- Ultra wide 4:1 Input range
- Continuous short circuit protection
- Operating Temperature: -40ºC to +85ºC
- On/Off Remote Control
- Over Voltage Protection
- Input / Output Isolation 1500VDC
- Over Current protection

RoHS

Models

Single output

Model	Input Voltage (V)	Output Voltage (V)	Output Current max (mA)	Isolation (VDC)	Max Capacitive Load(uF)	Efficiency (%)
AM15EW-11003S-NZ	40-160	3.3	4000	1500	4020	87
AM15EW-11005S-NZ	40-160	5	3000	1500	4020	89
AM15EW-11012S-NZ	40-160	12	1250	1500	1600	88
AM15EW-11015S-NZ	40-160	15	1000	1500	1000	88
AM15EW-11024S-NZ	40-160	24	625	1500	470	88

Add suffix "-K" for optional heat sink

NOTE: All specifications in this datasheet are measured at an ambient temperature of 25°C, humidity<75%, nominal input voltage and at rated output load unless otherwise specified.

Input Specifications

Parameters	Nominal	Typical	Maximum	Units
Voltage range	110	40-160		VDC
Filter		π(Pi) Network		
Start up time		10		ms
Absolute Maximum Rating	110		200	VDC
Peak Input Voltage time			100	ms
On/Off control		ON – open or 3.5-12VDC ; OFF – short to –Vin or 0-1.2VDC, Idle current 1mA		
No load Input Current			15	mA
Input reflected current		25		mA

Isolation Specifications

Parameters	Conditions	Typical	Maximum	Units
Tested I/O voltage	60 sec, 1mA	1500		VDC
Resistance		>1000		MOhm
Capacitance		2000		pF

Output Specifications

Parameters	Conditions	Typical	Maximum	Units
Voltage accuracy		±3		%
Over voltage protection	Zener Diode Clamp			%
Over current protection		130	170	% of Io
Short Circuit protection		Continuous		
Short circuit restart		Auto-Recovery		
Line voltage regulation	Full load, LL-HL	±0.5		% of Vin
Load voltage regulation	5% to 100% load	±1		%
Temperature coefficient			±0.02	%/ºC
Ripple & Noise	20MHz Bandwidth		100	mV p-p
Voltage adjustment range			±10	%
Minimum Load Current		5		% of Max
Transient recovery time	25% load step change		800	µS
Transient recovery deviation	25% load step change	±5		%

General Specifications

Parameters	Conditions	Typical	Maximum	Units
Switching frequency	100% load	300		KHz
Operating temperature	See derating curve	-40 to +85		ºC
Storage temperature	-55 to +125			ºC
Maximum case temperature			105	ºC
Cooling	Free air convection			
Humidity			95	% RH
Case material	Aluminum Alloy			
Weight	28 without heat sink/ 36 with heat sink			g
Dimensions (L x W x H)	2 x 1 x 0.47 inches 50.8 x 25.4 x 11.8 mm			
MTBF	>1,000,000 hours (MIL-HDBK -217F, Ground Benign, t=+25°C)			
Maximum soldering temperature	1.5mm from case for 10 sec		300	ºC

Safety Specifications

Parameters	
Standards	Meets EN60950-1
	EN 55022, class B (with the recommended EMC circuit)

Pin Out Specifications

Pin	Single
1	On/Off Control
2	-Vin
3	+Vin
4	-Vout
5	Trim
6	+Vout

Dimensions

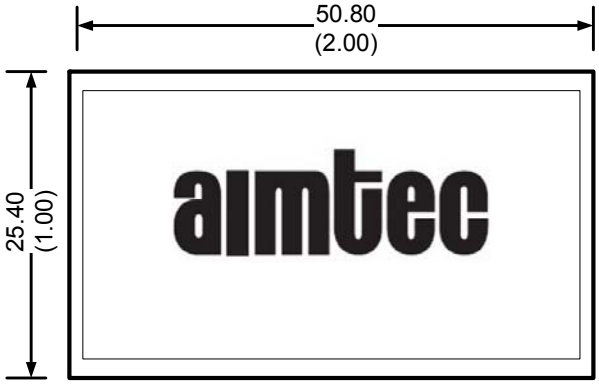

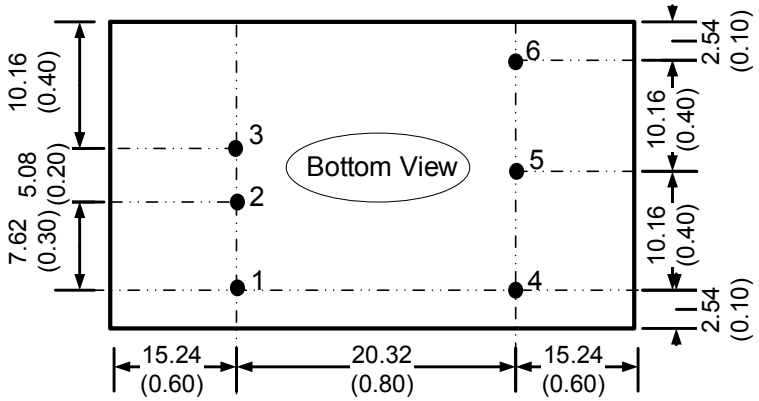

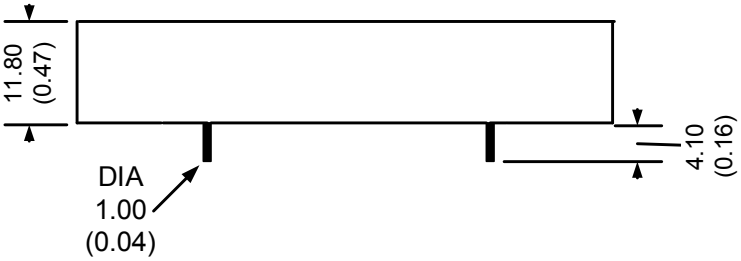

Notes:
All dimensions are typical in millimeters (inches).
Pin diameter Tolerance ±0.35 (±0.014)
Case Tolerance ±0.50 (±0.02)

Trimming

Output voltage can be externally trimmed by utilizing the methods as shown below

Fixed Resistor Variable Potentiometer

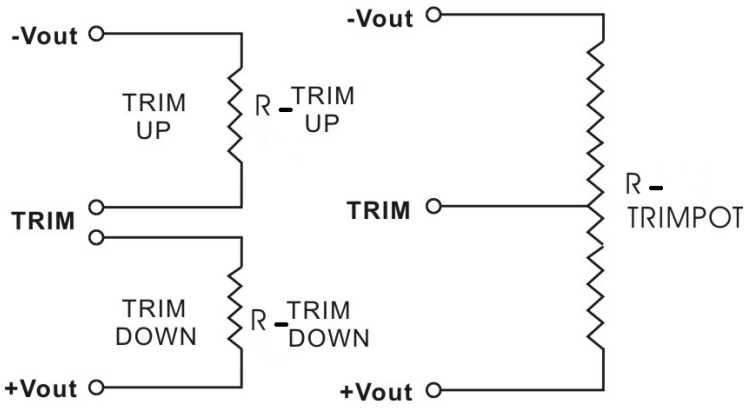

Leave open if not used.

AM15EW-11003S-NZ

Trim down %	1	2	3	4	5	6	7	8	9	10
Vout (VDC)	3.267	3.234	3.201	3.168	3.135	3.102	3.069	3.036	3.003	2.970
Rt down (KΩ)	173.432	98.098	65.027	46.445	34.541	26.263	20.174	15.507	11.815	8.823
Trim up %	1	2	3	4	5	6	7	8	9	10
Vout (VDC)	3.333	3.366	3.399	3.432	3.465	3.498	3.531	3.564	3.597	3.63
Rt up (KΩ)	399.723	110.716	59.087	37.519	25.677	18.193	13.034	9.264	6.387	4.12

AM15EW-11005S-NZ

Trim down %	1	2	3	4	5	6	7	8	9	10
Vout (VDC)	4.95	4.9	4.85	4.8	4.75	4.7	4.65	4.6	4.55	4.5
Rt down (KΩ)	96.08	49.349	30.67	20.616	14.333	10.034	6.909	4.533	2.667	1.162
Trim up %	1	2	3	4	5	6	7	8	9	10
Vout (VDC)	5.05	5.1	5.15	5.2	5.25	5.3	5.35	5.4	5.45	5.5
Rt up (KΩ)	205.698	76.406	44.023	29.296	20.879	15.431	11.617	8.798	6.63	4.91

AM15EW-11012S-NZ

Trim down %	1	2	3	4	5	6	7	8	9	10
Vout (VDC)	11.88	11.76	11.64	11.52	11.4	11.28	11.16	11.04	10.92	10.8
Rt down (KΩ)	505.529	303.041	211.851	159.978	126.504	103.114	85.849	72.581	62.066	53.527
Trim up %	1	2	3	4	5	6	7	8	9	10
Vout (VDC)	12.12	12.24	12.36	12.48	12.6	12.72	12.84	12.96	13.08	13.2
Rt up (KΩ)	614.769	150.097	78.994	50.198	34.607	24.832	18.13	13.249	9.536	6.616

AM15EW-11015S-NZ

Trim down %	1	2	3	4	5	6	7	8	9	10
Vout (VDC)	14.85	14.7	14.55	14.4	14.25	14.1	13.95	13.8	13.65	13.5
Rt down (KΩ)	570.165	371.335	271.179	210.846	170.524	141.673	120.008	103.142	89.638	78.584
Trim up %	1	2	3	4	5	6	7	8	9	10
Vout (VDC)	15.15	15.3	15.45	15.6	15.75	15.9	16.05	16.2	16.35	16.5
Rt up (KΩ)	3208.668	231.297	104.85	63.553	43.061	30.815	22.672	16.865	12.516	9.136

AM15EW-11024S-NZ

Trim down %	1	2	3	4	5	6	7	8	9	10
Vout (VDC)	23.76	23.52	23.28	23.04	22.8	22.56	22.32	22.08	21.84	21.6
Rt down (KΩ)	1135.537	730.699	532.922	415.701	338.146	283.038	241.862	209.929	184.441	163.624
Trim up %	1	2	3	4	5	6	7	8	9	10
Vout (VDC)	24.24	24.48	24.72	24.96	25.2	25.44	25.68	25.92	26.16	26.4
Rt up (KΩ)	2871.219	219.961	106.182	66.054	45.551	33.104	24.745	18.744	14.226	10.703

Derating

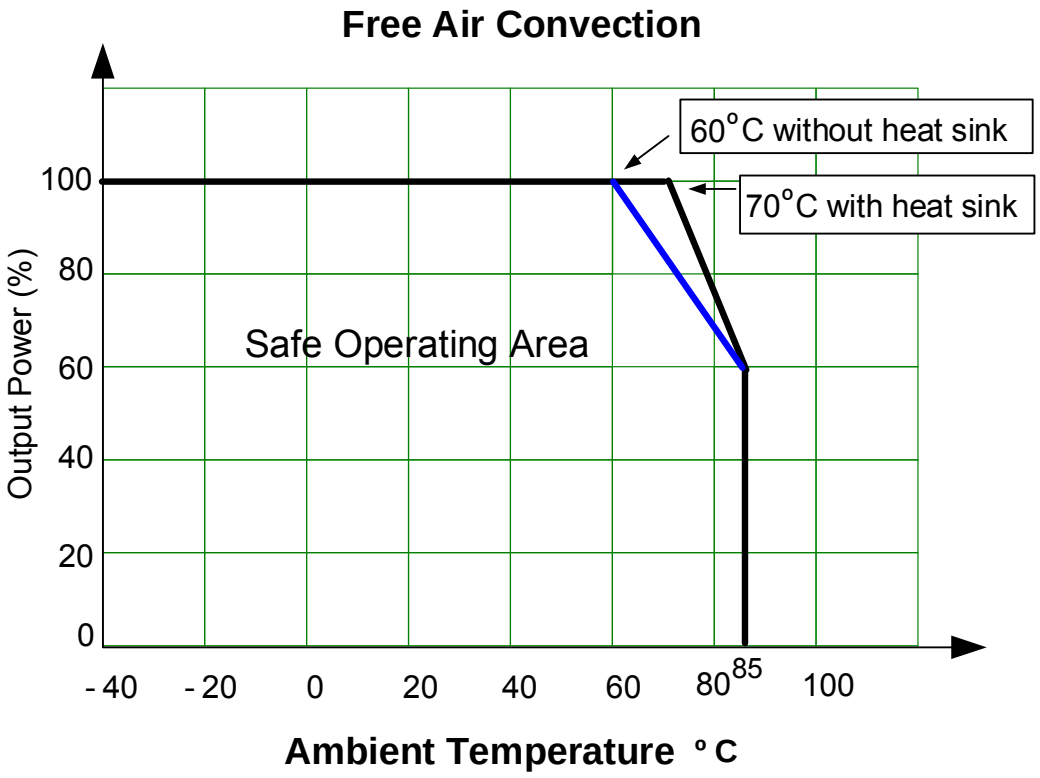

NOTE: 1. Datasheets are updated as needed and as such, specifications are subject to change without notice. Once printed or downloaded, datasheets are no longer controlled by Aimtec; refer to www.aimtec.com for the most current product specifications. **2.** Product labels shown, including safety agency certifications on labels, may vary based on the date manufactured. **3.** Mechanical drawings and specifications are for reference only. **4**. All specifications are measured at an ambient temperature of 25°C, humidity<75%, nominal input voltage and at rated output load unless otherwise specified. **5.**Aimtec may not have conducted destructive testing or chemical analysis on all internal components and chemicals at the time of publishing this document. CAS numbers and other limited information are considered proprietary and may not be available for release. **6.** This product is not designed for use in critical life support systems, equipment used in hazardous environments, nuclear control systems or other such applications which necessitate specific safety and regulatory standards other the ones listed in this datasheet. **7.** Warranty is in accordance with Aimtec's standard Terms of Sale available at www.aimtec.com.