26–33 GHz Surface Mount Double Balanced Down Converter Mixer

Alpha

AM028D1-A2

Patent Pending

Features

- Surface Mount Package
- Low Conversion Loss, 7 dB
- High Isolation, 25 dB
- Wide IF Bandwidth, 0–6 GHz
- No DC Bias Required
- 100% RF Testing for Conversion Loss

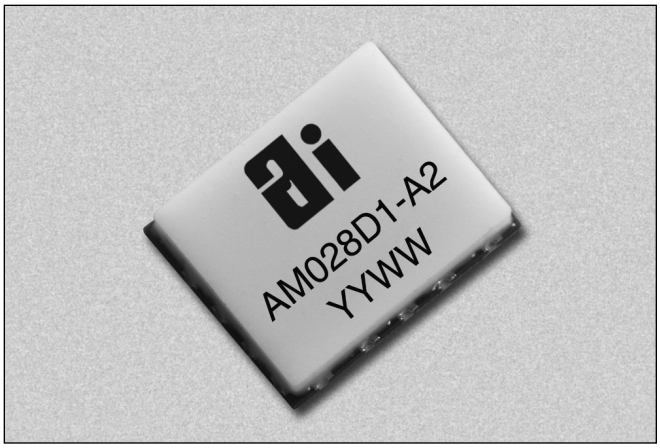

Description

The AM028D1-A2 is a broadband millimeterwave mixer in a rugged surface mount package which is compatible with high volume solder installation. The double balanced down converter mixer is designed for use in millimeterwave communication and sensor systems as a frequency converter in the receiver chain when wide dynamic range and high isolation are required. The robust ceramic surface mount package provides excellent electrical performance and a high degree of environmental protection for long-term reliability. All mixers are screened at the operating frequencies prior to shipment for guaranteed performance. Mixer is targeted for high volume millimeterwave applications such as point-to-point and point-to-multipoint wireless communications systems.

Pin Out

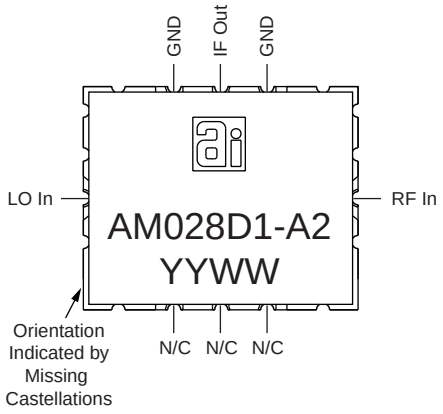

Electrical Specifications at 25°C

Parameter	Symbol	Min.	Typ.	Max.	Unit
RF and LO Frequency Range[2]	F_{RF}, F_{LO}		26–33		GHz
IF Frequency Range[2]	F_{IF}		0–6		GHz
LO Power Level[2]	P_{LO}		11–21		dBm
Conversion Loss[1]	L_C		7	9	dB
RF, LO and IF Return Loss[2]	RL		10		dB
LO to RF Isolation[2]	ISO_{LO-RF}		25		dB
LO to IF Isolation[2]	ISO_{LO-IF}		30		dB
RF to IF Isolation[2]	ISO_{RF-IF}		30		dB
RF Input 1 dB Compression Point[2]	$P_{1\ dB}$		11		dBm

1. Conversion loss is measured at F_{RF} = 28 GHz, F_{LO} = 26 GHz, P_{LO} = 13 dBm on 100% of parts.
2. Not measured on a 100% basis.

Typical Performance Data

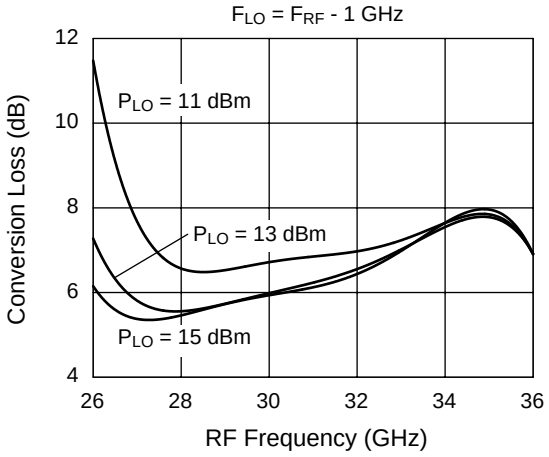

Conversion Loss

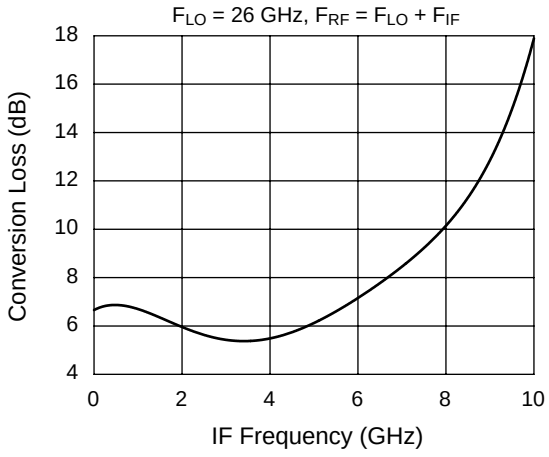

IF Bandwidth

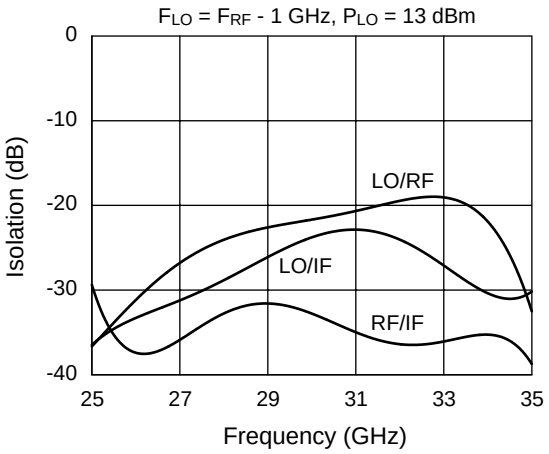

Isolation

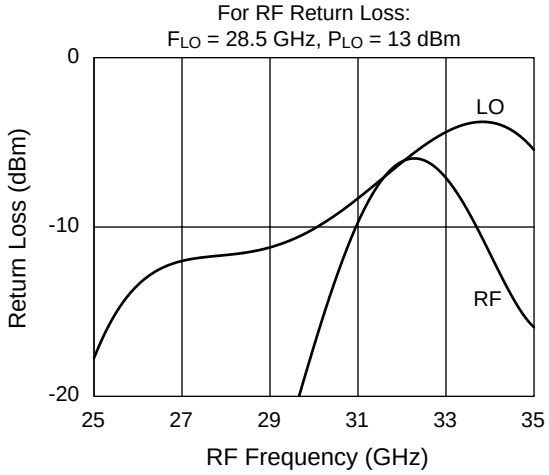

RF and LO Return Loss

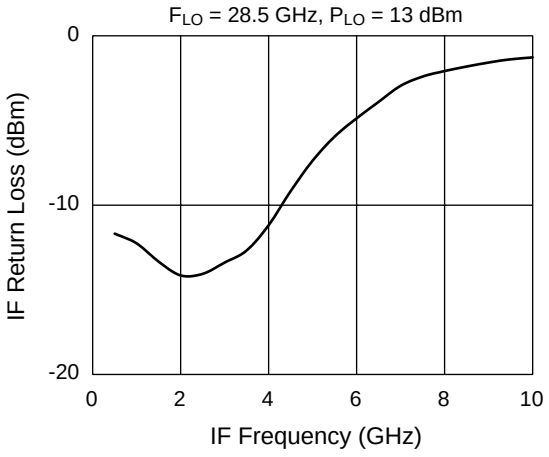

IF Return Loss

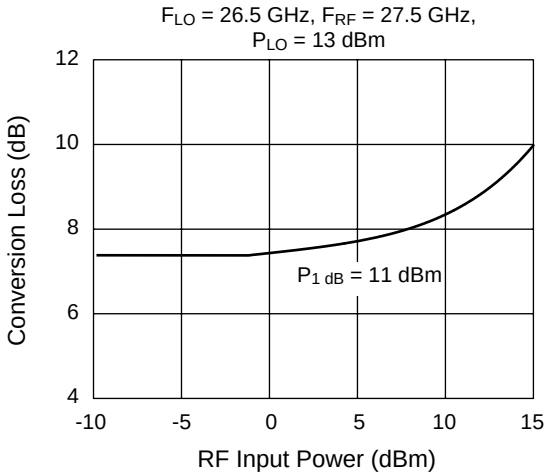

Input Power

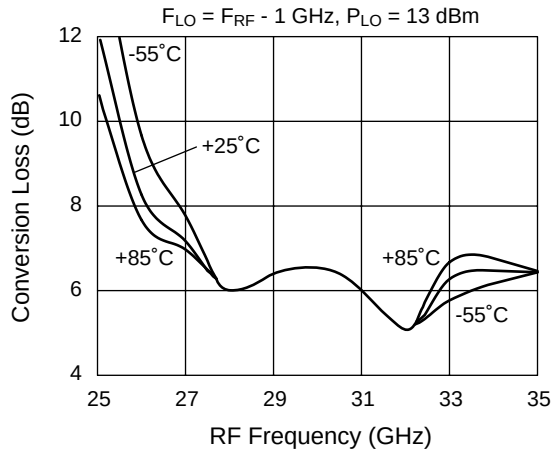

Temperature

Absolute Maximum Ratings

Characteristic	Value
Operating Temperature (T_C)	-55°C to +85°C
Storage Temperature (T_{ST})	-65°C to +125°C
Total Input Power (RF + LO)	+23 dBm

-A2

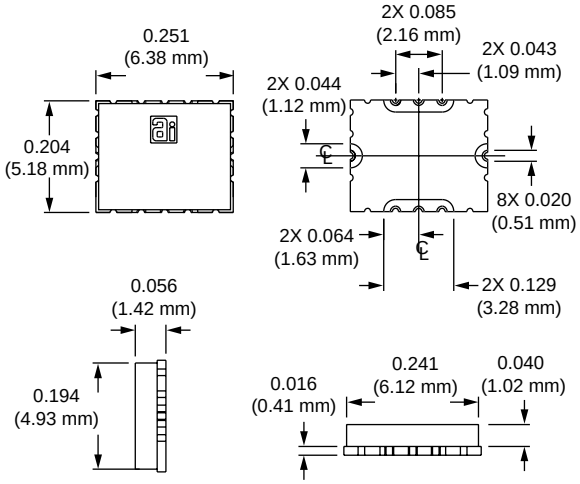

"Alpha Two" Surface Mount Package Handling and Mounting

Millimeterwave components require careful mounting design to maintain optimal performance. The Alpha Two surface mount package (patent pending) provides a rugged and repeatable electrical connection using standard solder techniques.

Handling

The Alpha Two surface mount package is very rugged. However, due to ceramic's brittle nature, one should exercise care when handling with metal tools. Do not apply heavy pressure to the lid. Vacuum tools may be used to pick and place this part.

Only personnel trained in both ESD precautions and handling precautions should be allowed to handle these packages.

Package Construction

The Alpha Two surface mount package consists of a base and a lid. The package base is ceramic with filled vias and plated castellations. The package lid is unplated alumina. The lid seal is epoxy.

Mounting Design

The Alpha Two surface mount package is installed on top of a printed circuit board on a specially designed footprint.

Mounting footprint geometry will be supplied by Alpha Industries in electronic formats or paper drawing.

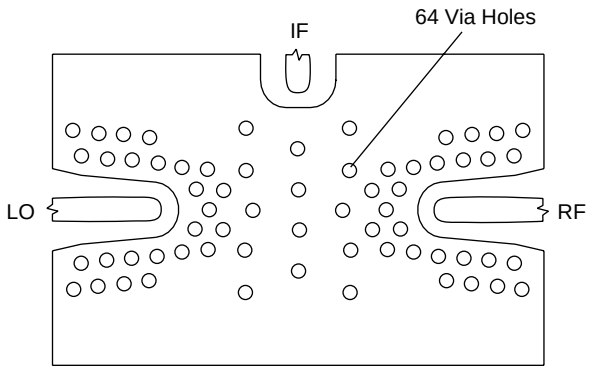

Footprint Geometry for Alpha Two Surface Mount Package (for AM028D1-A2 mixer only)

Mounting the Package

The Alpha Two surface mount package is compatible with high-volume surface mount installation using solder. RF, LO and IF connections are accomplished with metallized edge castellations that hold solder fillets. Ground connections are accomplished by both metallized edge castellations and filled vias to the bottom of the package. Care should be taken to ensure that there are no voids or gaps in the solder so that good RF, LO, IF, and ground contact is maintained.

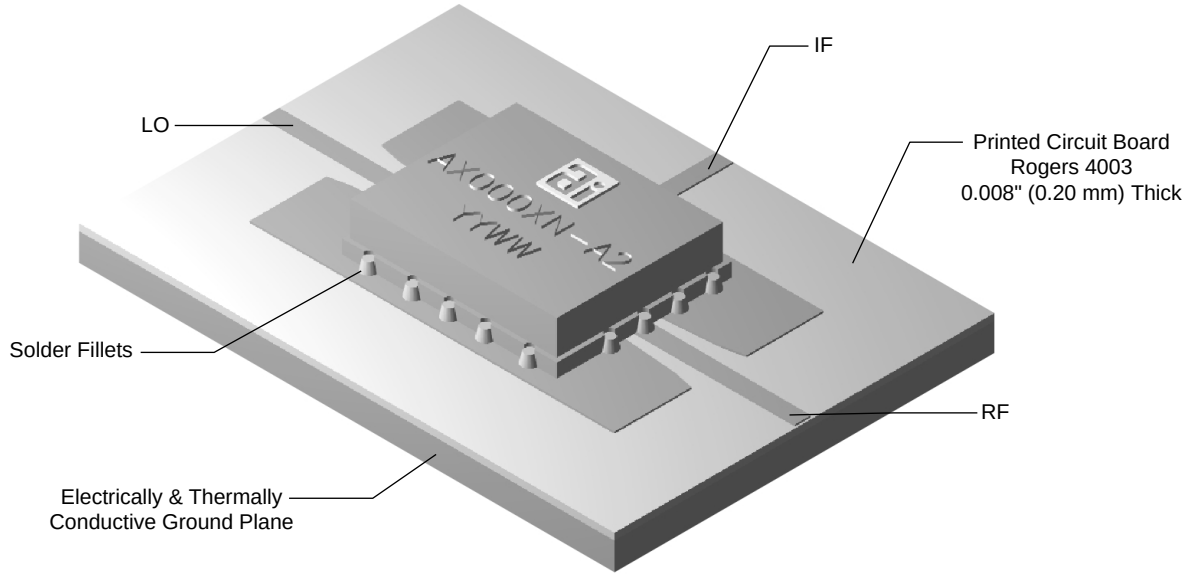

Alpha Two Surface Mount Package Installation