ALF60 SERIES 60 Watts

KEY FEATURES

- IP65/67 Design for Indoor or LED Outdoor Installations
- Universal Input: 90-305 VAC or 120-430 VDC
- Three in one dimming function
  (1~10VDC & PWM Signal or resistance)
- Bulit-in Active PFC Function
- Free Air Convection
- High Reliability
- With Constant Current & Constant Voltage
- Output Voltage and Constant Current Level can Be Adjusted Through Internal Potential Meter
- LED Power Application
- 3-Years Product Warranty



IP65/67 CE

ELECTRICAL SPECIFICATIONS

Model No.		ALF60-12S	ALF60-15S	ALF60-24S	ALF60-48S	ALF60-54S
Max Output Wattage (W)		60W				
Input	Voltage	90-305 VAC or 120-430 VDC				
	Frequency (Hz)	47-63 Hz				
	Current (Full load)	0.64 A max. (115 VAC) / 0.32 A max. (230 VAC) / 0.3 A max. (277 VAC)				
	Inrush Current (<2ms)	40 A max. (115 VAC) / 70 A max. (230 VAC)				
	Leakage Current	<0.75 mA max.				
	Power Factor	PF>0.97 (115 VAC) / PF>0.9 (230 VAC) at Full Load				
Output	Voltage (V.DC.)	12V	15V	24V	48V	54V
	Constant Current Range (V.DC.)	6 ~ 12V	7.5 ~ 15V	12 ~ 24V	24 ~ 48V	27 ~ 54V
	Voltage Accuracy	±2%				
	Current (Convection) (mA) max	5000	4000	2500	1250	1111
	Current ADJ Range (mA)	2500 ~ 5000	2000 ~ 4000	1250 ~ 2500	625 ~ 1250	556 ~ 1111
	Voltage ADJ Range (V.DC.) (for IP65 Design)	10.8 ~ 13.5V	13.5 ~ 17V	22 ~ 27V	43 ~ 53V	49 ~ 58V
	Line Regulation	±1%				
	Load Regulation	±1%				
	Minimum Load					
	Maximum Capacitive Load					
	Ripple & Noise (max.)	150mVp-p	150mVp-p	150mVp-p	300mVp-p	300mVp-p
	Efficiency (typ.)	87%	87%	88%	89%	89%
	Hold-up Time	25 ms min.				
	Switching Frequency					
Protection	Over Power Protection	Auto recovery				
	Over Voltage Protection	Auto recovery				
	Overt Temperature Protection	Auto recovery				
	Short Circuit Protection	Auto recovery				
Isolation	Input-Output (V.AC)	3750V				
	Input-FG (V.AC)	1880V				
	Output-FG (V.AC)	500V				
Environment	Operating Temperature	-40°C…+70°C (with derating)				
	Storage Temperature	-40°C…+85°C				
	Temperature Coefficient	±0.02%/°C (0~50°C)				
	Humidity	95% RH				
	MTBF	>100,000 h @ 25°C (MIL-HDBK-217F)				
	Vibration	10~500Hz, 5G 10min./1cycle, 60min. each along X, Y, Z axes.				

1. All specifications valid at normal input voltage, full load and +25°C after warm-up time unless otherwise stated.
2. Ripple & Noise are measured at 20MHz of bandwidth with 0.1uF & 47uF parallel capacitor.

ALF60 SERIES 60 Watts

Model No.		ALF60-12S	ALF60-15S	ALF60-24S	ALF60-48S	ALF60-54S
Physical	Dimension (L x W x H)	6.1 x 2.17 x 1.38 Inches (155.0 x 55.0 x 35.0 mm) Tolerance ±0.5 mm				
	Weight	g				
	Cooling Method	Free air convection				
Safety	Agency Approvals	EN61347-1:2008、 EN61347-2-13:2006 (Pending)				
EMC	EMI (Conducted & Radiated Emission)	EN 55015、Class B (Pending)				
	EMS (Noise Immunity)	EN 61547 (Pending)				
	Surge	2KV L-L, 4KV L-E				

1. All specifications valid at nominal input voltage, full load and +25°C after warm-up time unless otherwise stated.
2. Ripple & Noise are measured at 20MHz of bandwidth with 0.1uF & 47uF parallel capacitor.

MECHANICAL DIMENSION (Top View)

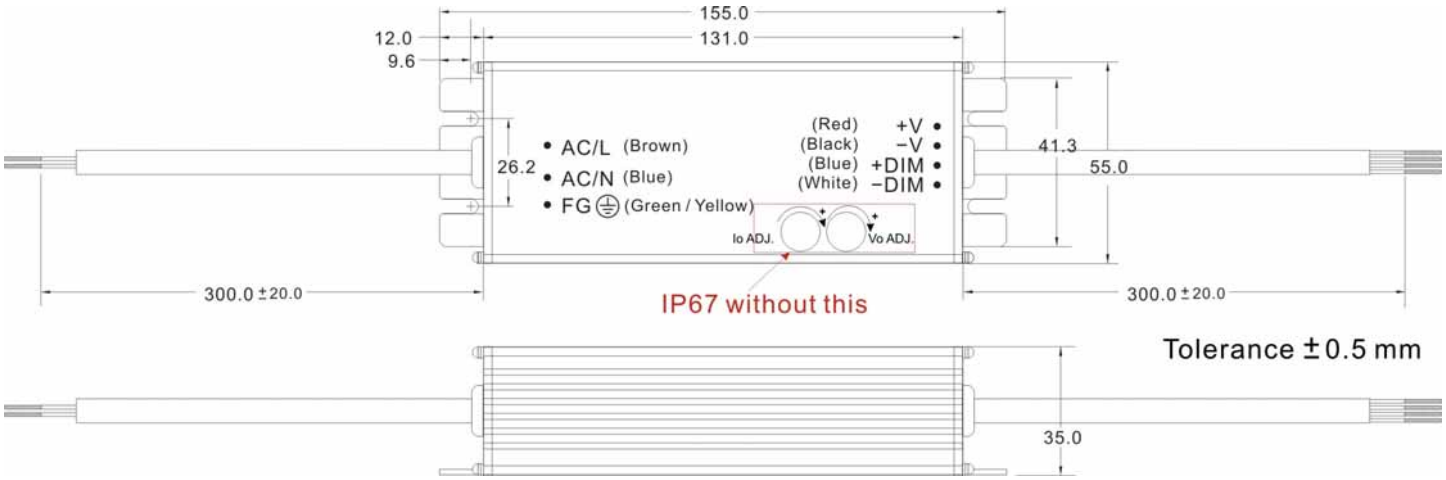

DERATING

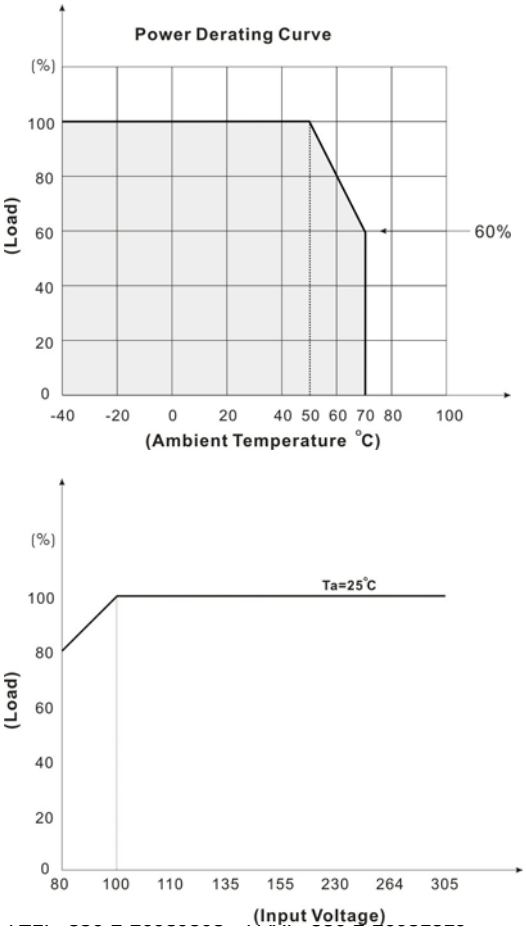

ASSEMBLY INSTRUCTIONS

*U Case T=2.5mm

Customer screws into the length of the case no higher than 0.5mm
(Namely screw length for load plate thickness plus 3.0mm

BLOCK DIAGRAM

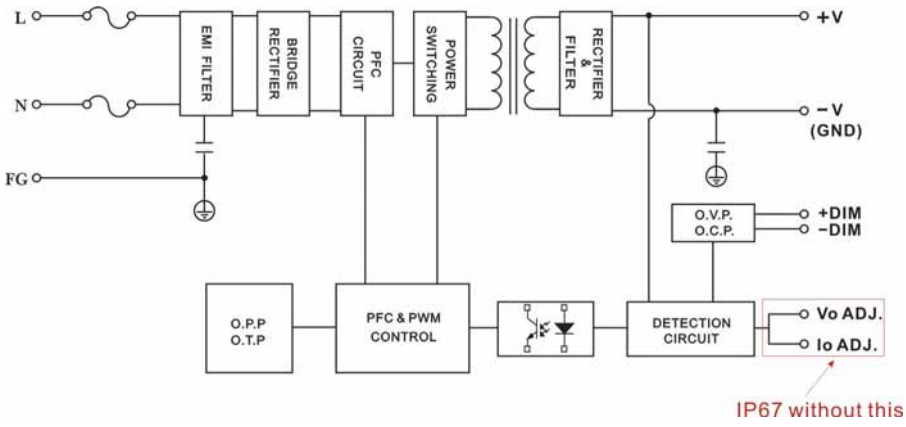

EFFICIENCY VERSUS LOAD

ALF60-12S

VIN VS Efficiency

Input Voltage (V)	90	115	180	230	264
Efficiency (%)					
Input Voltage (V)	277	305			
Efficiency (%)					

LOAD VS Efficiency

Load (%)	0	10	20	30	40	50
115V (%)						
230V (%)						
Load (%)	60	70	80	90	100	
115V (%)						
230V (%)						

ALF60-15S

VIN VS Efficiency

Input Voltage (V)	90	115	180	230	264
Efficiency (%)					
Input Voltage (V)	277	305			
Efficiency (%)					

LOAD VS Efficiency

Load (%)	0	10	20	30	40	50
115V (%)						
230V (%)						
Load (%)	60	70	80	90	100	
115V (%)						
230V (%)						

EFFICIENCY VERSUS LOAD

ALF60-24S

VIN VS Efficiency

Input Voltage (V)	90	115	180	230	264
Efficiency (%)					
Input Voltage (V)	277	305			
Efficiency (%)					

LOAD VS Efficiency

Load (%)	0	10	20	30	40	50
115V (%)						
230V (%)						
Load (%)	60	70	80	90	100	
115V (%)						
230V (%)						

ALF60-48S

VIN VS Efficiency

Input Voltage (V)	90	115	180	230	264
Efficiency (%)					
Input Voltage (V)	277	305			
Efficiency (%)					

LOAD VS Efficiency

Load (%)	0	10	20	30	40	50
115V (%)						
230V (%)						
Load (%)	60	70	80	90	100	
115V (%)						
230V (%)						

EFFICIENCY VERSUS LOAD

ALF60-54S

VIN VS Efficiency

Input Voltage (V)	90	115	180	230	264
Efficiency (%)					
Input Voltage (V)	277	305			
Efficiency (%)					

LOAD VS Efficiency

Load (%)	0	10	20	30	40	50
115V (%)						
230V (%)						
Load (%)	60	70	80	90	100	
115V (%)						
230V (%)						