ALD-310012PJ125

DC-DC Converter for LC Panels with LED Backlights

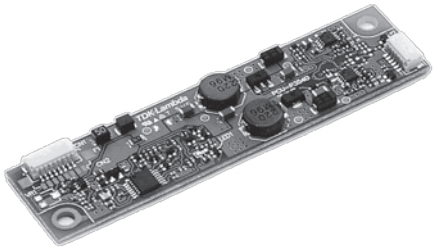

■ Features

- ●Three Outputs
- ●Low profile and compact
- ●High efficiency
- ●Usable in a wide range of temperatures
- ●Applicable panel size: 8 to 15 inches (rough guide)
- ●Combined use of PWM modulated light and analog modulated light (ADIM) assures universality
- ●Equipped with load (LED) open detection (alarm output) function

■ Applications



MED MEASURE FA SEMI LED driver Others

ALD-310012PJ125 Specifications (Please refer to each specification before use)

Electrical Characteristics

Item	Unit	Symbol	Specification			Condition						
			min	typ	max	Vin(V)	Vrmt(V)	Vbr1(V)	Rbr2(kΩ)	Ta(°C)	RL1-3(Ω)	Remarks
Output Current	mA	Iout1,2,3 (Maximum brightness)	85	100	115	12±0.5	5±0.25	2.5	10	25±10	380	(*1)
		Iout1,2,3 (Minimum brightness)	25	40	55	12±0.5	5±0.25	1	10	25±10	380	PWM modulated light (*1)(*2)
			25	40	55	12±0.5	5±0.25	2.5	1	25±10	380	ADIM modulated light (*1)(*2)
Input Current	A	Iin1	-	1.1	1.5	12±0.5	5±0.25	2.5	10	25±10	380	Remote ON
	mA	Iin2	-	-	1	12±0.5	0	2.5	10	25±10	380	Remote OFF
Modulated light frequency	Hz	F	180	225	270	12±0.5	5±0.25	1	10	25±10	380	
Alarm Signal	V	Vst	-	-	1	12±0.5	5±0.25	2.5	10	25±10	380	On a normal operation (*3)
			4.5	5.0	5.5	12±0.5	5±0.25	2.5	10	25±10	∞	In case of lamp anomaly (*3)

Other Specifications

Modulated light system		PWM/ADIM (*2)
Operating Temperature	°C	-30 to +80
Storage Temperature	°C	-40 to +85
Operating Humidity Ratio	RH%	95Max
Weight	g	9 max.
Dimensions (WxDxH)	mm	85x21.5x5.5 (*4)
Fused Input		Yes
Remote ON / OFF		Yes
Lamp open detection function		Yes

■ Conformity to RoHs Directive

This means that, in conformity with EU Directive 2002/95/EC, lead, cadmium, mercury, hexavalent chromium, and specific bromine-based flame retardants, PBB and PBDE, have not been used, except for exempted applications.

(*1) When output is open, the output voltage of that series is restricted, and other series operate normally.
(*2) See “Connections” as well as “Analog Modulation Light (ADIM) and PWM Modulation Light” for details about modulation light.
(*3) See “Connections” for details about alarm output.
(*4) These dimensions are indicated the maximum only H. Others are typical values.

・All specifications are subject to change without notice.

Outline Drawing

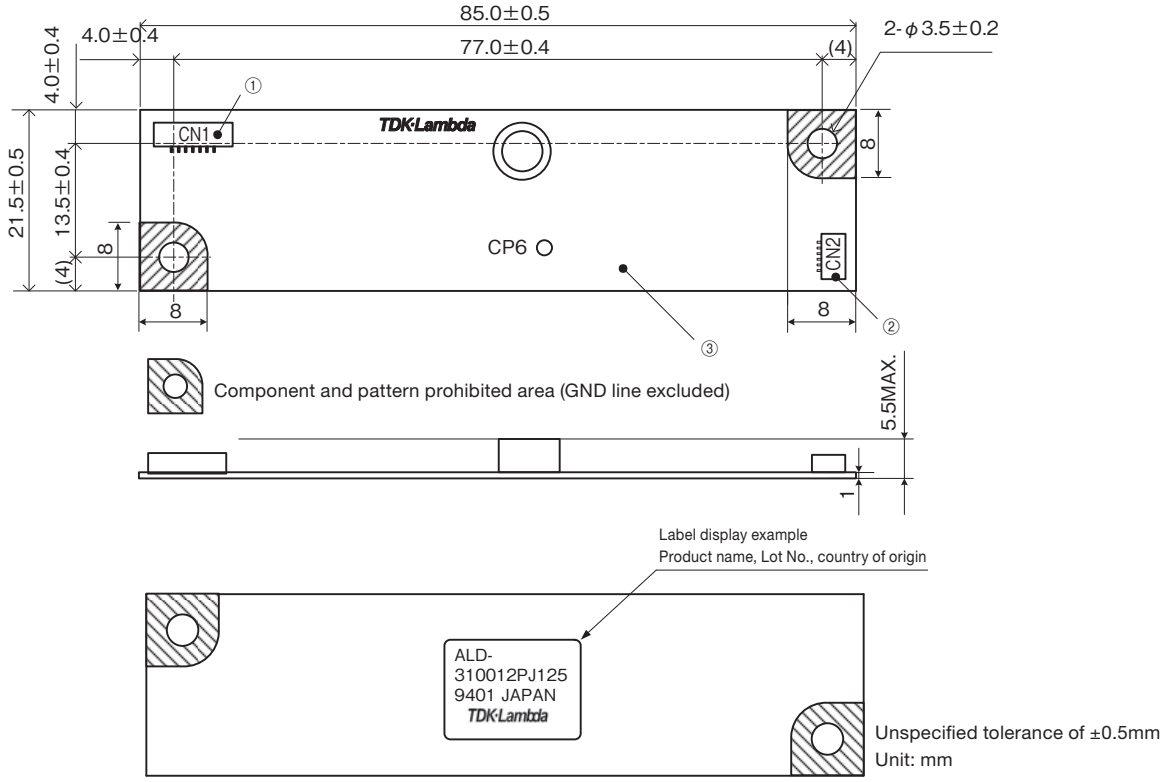

When securing LED driver, check to make sure crowns and plates (including uneven parts) fit inside the above prohibited areas (diagonal lined areas).

Connector

No.	Component name	Type name	Qty	Remarks	Recommended suitable connector
①	Input connector CN1	53261-0871	1	Molex	51021-0800
②	Output connector CN2	SM06B-SRSS-TB(LF)(SN)	1	J.S.T Mfg., Co., Ltd	SHR-06V-S-B
③	Printed circuit board PCB	Glass epoxy (FR-4)	1	UL94V-0 t=1.0mm	—

Terminal Number & Function

Input side CN1

Terminal No.	Symbol	Rating	Remarks
CN1-1	Vin	12±1.2V	Power source input
CN1-2			
CN1-3	GND	0V	Ground
CN1-4			
CN1-5	Vrmt	0-0.4V/2.5-VinV	OFF / ON
CN1-6	Vbr1 Vpwm* /Rbr1	0.4V/2.5V Min. ON time 50us 750Ω/10kΩ	PWM modulated light MIN/MAX Modulated light function using output PWM modulation
CN1-7	ADIM	1.6V/4.0V 1kΩ/10kΩ	ADIM modulated light MIN/MAX Modulated light function using output current variation
CN1-8	Vst	0V/5.0V	At time of normal load/ at time of abnormal load

Output side CN2

Terminal No.	Symbol	Remarks
CN2-1	+CH3	CH3 – anode side
CN2-2	+CH2	CH2 – anode side
CN2-3	+CH1	CH1 – anode side
CN2-4	-CH1	CH1 – cathode side
CN2-5	-CH2	CH2 – cathode side
CN2-6	-CH3	CH3 – cathode side

*With Vpwm, 0V is OFF and 3.3V is ON.

*Using variable resistance (Rbr2) is recommended for modulating light. Depending on the power source, there is a possibility that voltage will not drop to 0V.

· All specifications are subject to change without notice.

Connections

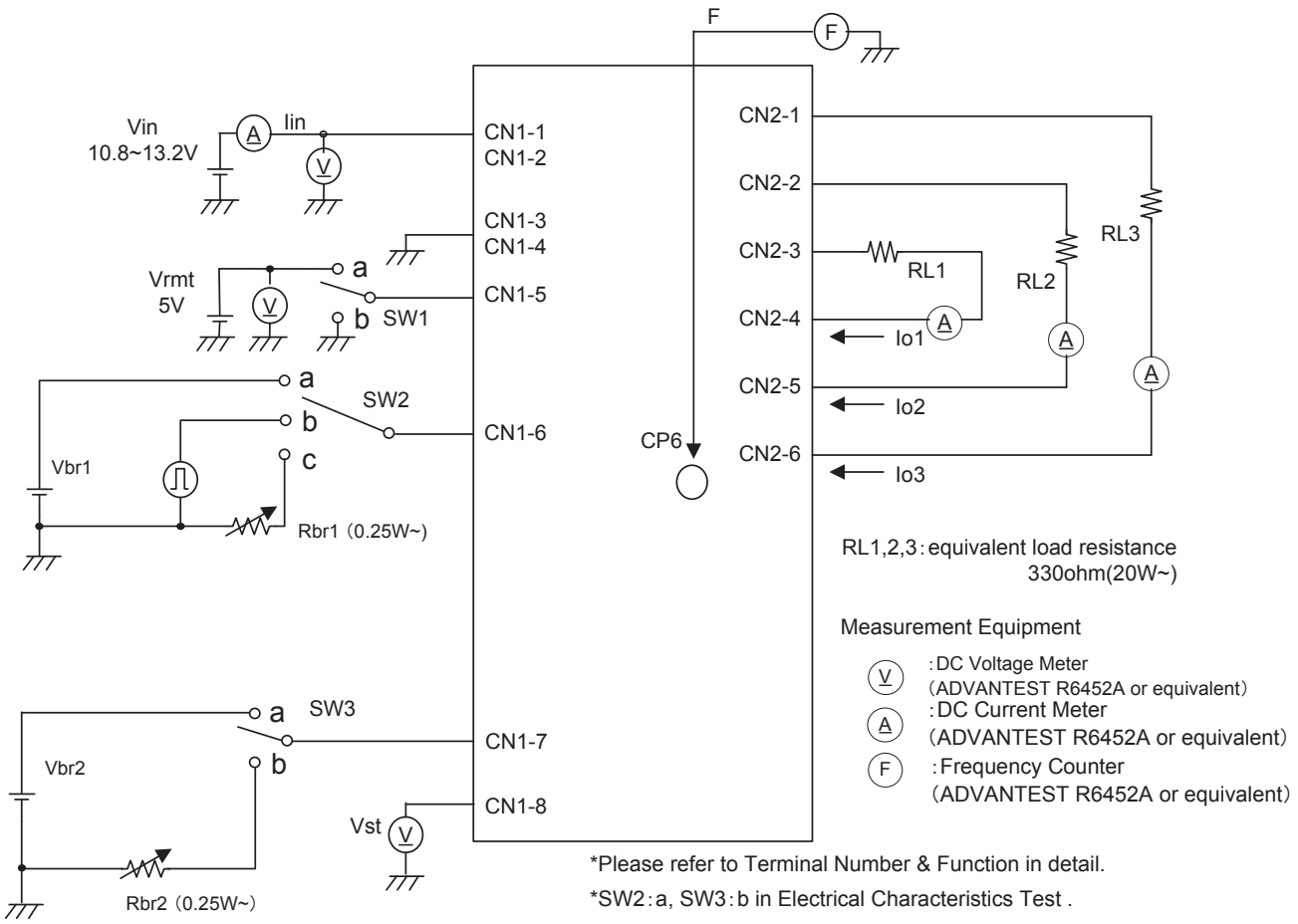

*Please refer to Terminal Number & Function in detail.

*SW2：a, SW3：b in Electrical Characteristics Test .

SW1 function

SW1	ON/OFF control
a	Operating
b	Not operating
Open	Not operating

SW2 function

SW2	PWM Dimming
a	DC input Vbr1=2.5V : brightness MAX Vbr1=0.4V : brightness MIN
b	Pulse input ON : 3.3~5V OFF : 0V 180Hz~500Hz MIN ON time : 50us
c	VR input Rbr1=10kohm : brightness MAX Rbr1=750ohm : brightness MIN
Open	Brightness MAX

* In b, LED may occur a flicker according to the input frequency or jitter level.
* Please confirm the LED may not occur a flicker or a black out in the outside of the range above when it uses it.

SW3 function

SW3	Analog Dimming
a	DC input Vbr2=4.0V : brightness MAX Vbr2=1.6V : brightness MIN
b	VR input Rbr2=10kohm : brightness MAX Rbr2=1kohm : brightness MIN

* Do not open SW3.
* Please confirm the LED may not occur a flicker or a black out in the outside of the range above when it uses it.

Protection Circuit Behaviour

Load Condition	Alarm output (CN1-6)*1	Remarks
normal	1V max.	Nomal operation
1 strings open	4.5V min.	Other string are nomal operation
2 strings open	4.5V min.	Other string are nomal operation
3 strings open	4.5V min.	Maintain minimum control operation

* In steady state of Ala rm output keeps under 1V.
If any stirings open or all strings open condition occurs, alarm output goes high around 5V.

Analog Modulated Light (ADIM) and PWM Modulated Light Combination Example

Determines maximum value for output current in analog modulated light, to enable brightness control at that range, using PWM modulated light.

<Modulated Light Example 1 (blue in diagram below)>
Set output current value to 100%, in cases where PWM modulated light is desired at a modulated light range of 100% to 0%

<Modulated Light Example 2 (red in diagram below)>
Set output current value to 50%, in cases where PWM modulated light is desired at a modulated light range of 100% to 0%

PWM Modulated Light Voltage and Output Current Examples

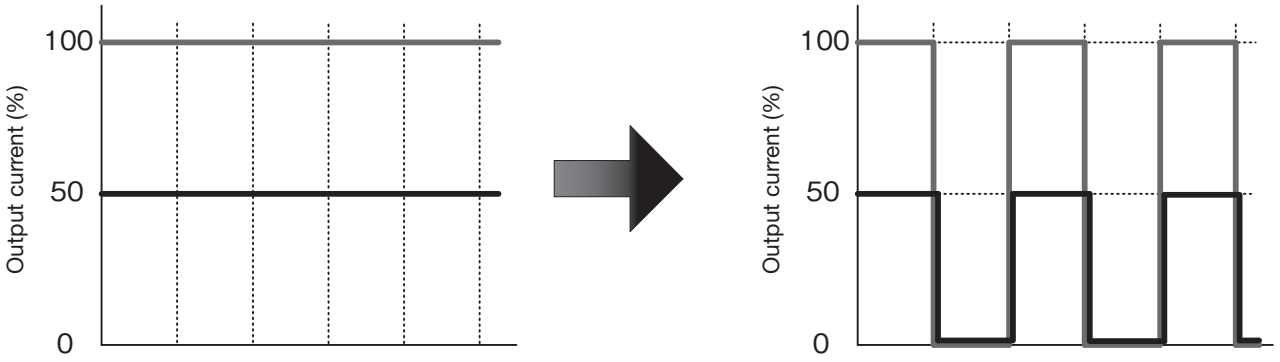

Analog modulated light is the modulated light system for changing current amplitude. The benefits this system offer are that low frequency noise hardly occurs because it does not have an intermittent action and input power source load is small because input current variation is small. Conversely, because it changes the LED action point, chromaticity varies according to the modulated light.
PWM modulated light is the system where intermittent actions are made at low frequency in the range of 100Hz to 1kHz, and this on duty is varied to modulate light. Although this system leaves concern about low frequency noise and the demand for excessive answering to accommodate input power source, it offers the benefit of small chromaticity variations according to the modulated light because the LED action point does not change. PWM modulated light comes in two forms: a built-in PWM modulated light system (this is inside the LED driver generating chopping and sawtooth waves, which are compared against the external DC voltage to form a modulated light pulse) and an external PWM modulated light system (this directly applies the pulse from outside to modulate light).
The ALD Series combines analog modulated light and PWM modulated light to enable the generation of modulated light that suits your needs.

・All specifications are subject to change without notice.