60V, 150mA ADJUSTABLE LINEAR LED DRIVER

NEW PRODUCT

Description

The AL5812 is an adjustable Linear LED driver offering excellent temperature stability and output handling capability. The AL5812 simplifies the design of linear and isolated or non-isolated LED drivers by setting the LED current with standard value resistors.

The AL5812 has an open drain output that can swing from 1V up to 60V enabling it drive long LED chains. Its low 0.5V R_{SET} pin is outside of the LED current path and so accuracy is maintained while minimizing the required overheads to regulate the LED current. This reduces its power dissipation when compared to traditional linear LED drivers. This makes it ideal for driving LEDs up to 150mA (commonly referred to as ½W LEDs).

Longer LED chains can be driven by tapping V_{CC} from the chain, where the chain voltage may exceed 60V.

The AL5812 is available in the exposed pad MSOP-8EP and U-DFN3030-6 packages.

Features

- Low Reference Voltage (V_{RSET} = 0.5V)
- -40°C to +125°C Temperature Range
- ±3% LED Current Tolerance
- Low Temperature Drift
- 1V to 60V Open-Drain Output
- High Power Supply Rejection
- MSOP-8EP and U-DFN3030-6
- **Totally Lead-Free & Fully RoHS Compliant (Notes 1 & 2)**
- **Halogen and Antimony Free. "Green" Device (Note 3)**

Pin Assignments

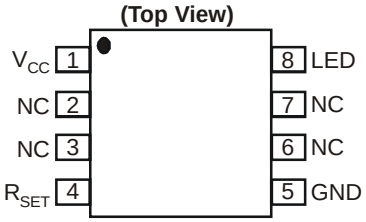

MSOP-8EP

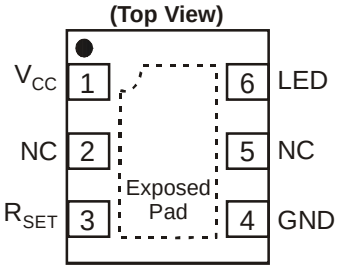

U-DFN3030-6

Applications

- Isolated Offline LED Converters
- Linear LED Driver
- LED Signs
- Instrumentation Illumination

Notes:
1. No purposely added lead. Fully EU Directive 2002/95/EC (RoHS) & 2011/65/EU (RoHS 2) compliant.
2. See http://www.diodes.com for more information about Diodes Incorporated's definitions of Halogen- and Antimony-free, "Green" and Lead-free.
3. Halogen- and Antimony-free "Green" products are defined as those which contain <900ppm bromine, <900ppm chlorine (<1500ppm total Br + Cl) and <1000ppm antimony compounds.

Typical Applications Circuit

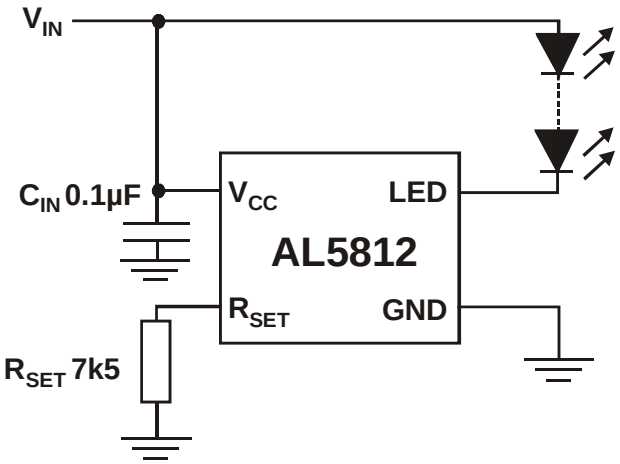

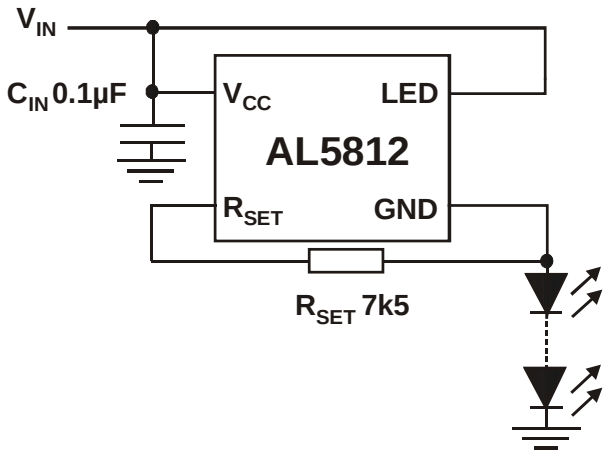

© Diodes Incorporated

NEW PRODUCT

Pin Descriptions

Pin Name	Pin Number (MSOP8-EP)	Pin Number (U-DFN3030-6)	Function
V_{CC}	1	1	Power Supply Input. Connect a 0.1µF ceramic capacitor between V_{CC} and GND as close as possible to the device.
R_{SET}	4	3	LED Current Setting Pin. Connect a resistor from this pin to GND: $I_{LED} = 750/R_{SET}$ May also be used to provide PWM dimming functionality.
GND	5	4	Ground Reference Point of Device.
LED	8	6	LED Current Sink Output.
NC	2, 3, 6, 7	2, 5	No Connection.
EP	EP	EP	Exposed Pad (bottom). Used to improve thermal impedance of package. It must be connected to GND directly underneath the package but not used as sole GND potential terminal.

Functional Block Diagram

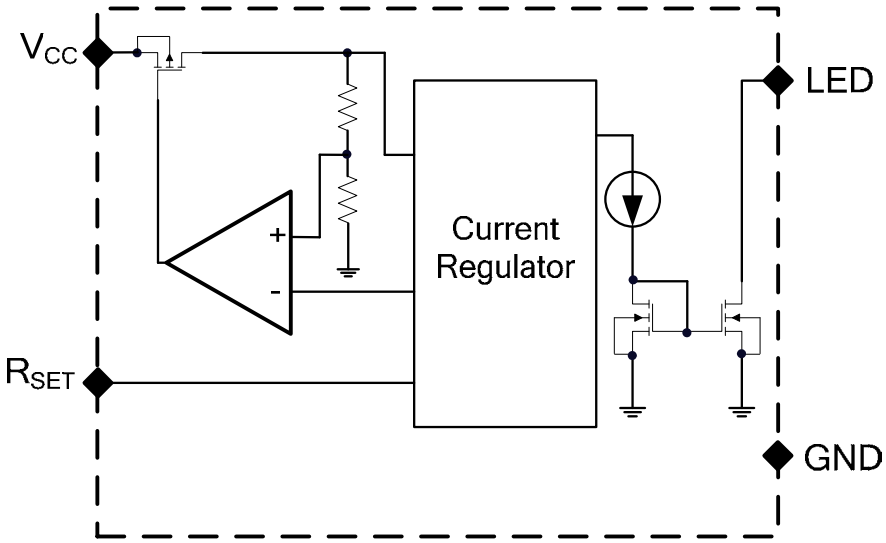

© Diodes Incorporated

NEW PRODUCT

Absolute Maximum Ratings (@T_A = +25°C, unless otherwise specified.)

Symbol	Parameters	Ratings	Unit
V_{CC}	Supply Voltage Relative to GND Pin (Note 4)	-0.3 to +66	V
V_{LED}	LED Pin Voltage Relative to GND Pin (Note 4)	-0.3 to +66	V
V_{RSET}	R_{SET} Pin Voltage Relative to GND	-0.3 to +6	V
I_{LED}	LED Pin Current Sink Current Range	165	mA
ESD HBM	Human Body Model ESD Protection	1	kV
ESD CDM	Charged Device Model ESD Protection	1.2	kV
T_J	Operating Junction Temperature	-40 to +150	°C
T_{ST}	Storage Temperature	-55 to +150	°C

Note: 4.V_{CC} pin can be greater or smaller than V_{LED}; neither should go below GND.

Caution: Stresses greater than the 'Absolute Maximum Ratings' specified above, may cause permanent damage to the device. These are stress ratings only; functional operation of the device at these or any other conditions exceeding those indicated in this specification is not implied. Device reliability may be affected by exposure to absolute maximum rating conditions for extended periods of time.
Semiconductor devices are ESD sensitive and may be damaged by exposure to ESD events. Suitable ESD precautions should be taken when handling and transporting these devices.

Package Thermal Data

Package	θ_{JC} Thermal Resistance Junction-to-Case (Note 7)	θ_{JA} Thermal Resistance Junction-to-Ambient (Note 7)	P_{DIS} T_A = +25°C, T_J = +125°C (Note 7)
MSOP-8EP	39	90°C/W (Note 5)	1.1W
U-DFN3030-6	14	69°C/W (Note 6)	1.47W

Notes:
5. Test condition for MSOP-8EP: Device mounted on FR-4 PCB (51mm x 51mm 2oz copper, minimum recommended pad layout on top layer and thermal vias to bottom layer ground plane. For better thermal performance, larger copper pad for heat-sink is needed.
6. Test condition for U-DFN3030-6: Device mounted on FR-4 PCB (51mm x 51mm 2oz copper, minimum recommended pad layout on top layer and thermal vias to bottom layer with maximum area ground plane. For better thermal performance, larger copper pad for heat-sink is needed
7. Dominant conduction path via exposed pad.

Recommended Operating Conditions (@T_A = +25°C, unless otherwise specified.)

Symbol	Parameter	Min	Max	Unit
V_{CC}	Supply Voltage Range Relative to GND Pin	3.5	60	V
V_{LED}	LED Pin Output Voltage Range Relative to GND Pin	1	60	
I_{LED}	LED Pin Current (Notes 8 & 9)	10	150	mA
T_A	Operating Ambient Temperature Range	-40	+125	°C

Notes:
8. For improved accuracy LED current should be greater than 60mA.
9. Maximum LED current is also limited by ambient temperature and power dissipation such that junction temperature should be kept less than or equal to +125°C.

© Diodes Incorporated

NEW PRODUCT

Electrical Characteristics (@T_A = +25°C, V_{CC}= 3.5V, V_{LED}=1V (Note 10), R_{SET} = 7.5kΩ unless otherwise specified.)

Symbol	Parameter	Conditions		Min	Typ	Max	Unit
V_{RSET}	R_{SET} Voltage		T_A = -40°C to +125°C		0.5		V
I_{LED}	I_{LED} Current Accuracy	R_{SET} = 12.5kΩ	T_A = +25°C	57	60	63	mA
		R_{SET} = 4.99kΩ		142.5	150	157.5	
		R_{SET} = 7.5kΩ		97	100	103	
			T_A = -40°C to +125°C	95		105	
REG_{LINE}	LED Current Line Regulation	V_{CC} = 3.5V to 60V	T_A = +25°C		0.25		%
UVLO	Under Voltage Lockout		T_A = -40°C to +125°C		2		V
I_{CC}	Supply Current	3.5V ≤ V_{CC} ≤ 60V	T_A = +25°C		320	400	μA
			T_A = -40°C to +125°C			500	
I_{LEAK}	LED Pin Leakage Current	V_{CC} = V_{LED} = 60V R_{SET} = Open Circuit	T_A = +125°C			1	μA
T_{SHDN}	Thermal Shutdown				155		°C
T_{HYS}	Thermal Shutdown Hysteresis				20		°C

Note: 10. All voltages unless otherwise stated are measured with respect to GND pin.

© Diodes Incorporated

NEW PRODUCT

Typical Performance Characteristics

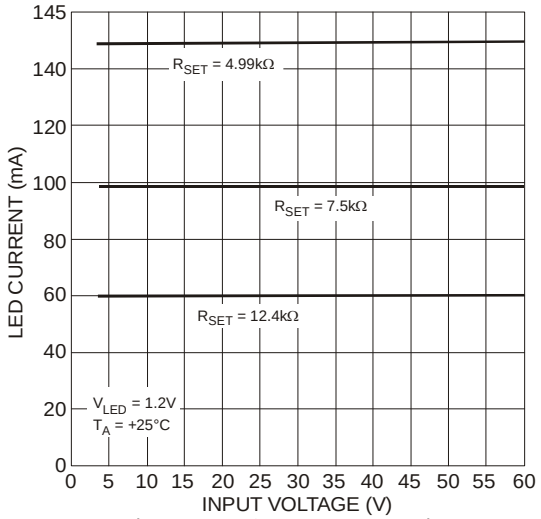

Figure 1 LED Current vs. Input Voltage

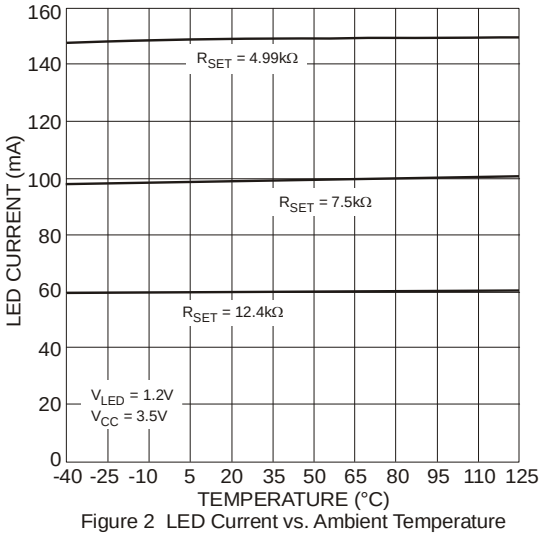

Figure 2 LED Current vs. Ambient Temperature

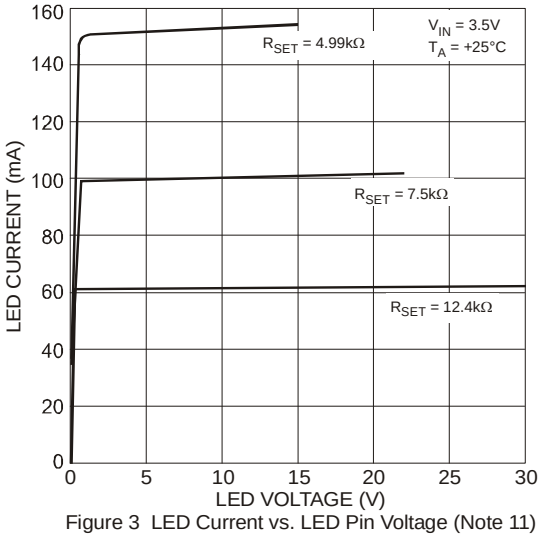

Figure 3 LED Current vs. LED Pin Voltage (Note 11)

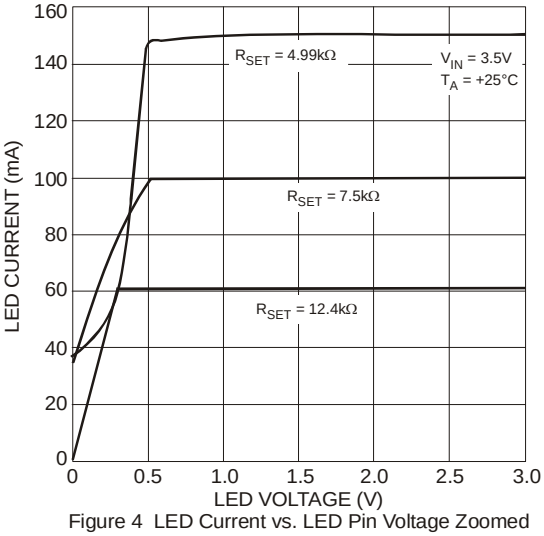

Figure 4 LED Current vs. LED Pin Voltage Zoomed

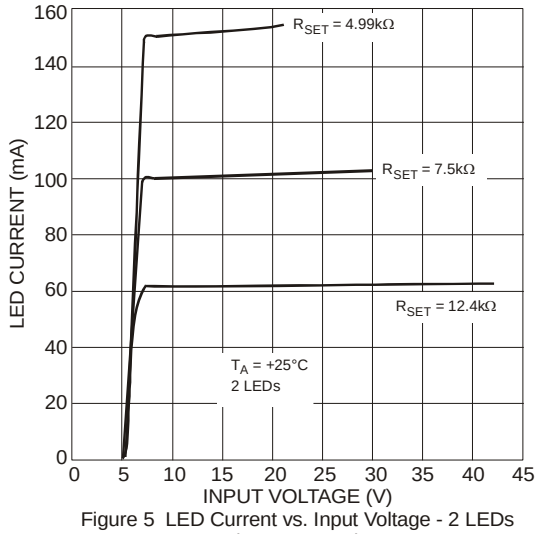

Figure 5 LED Current vs. Input Voltage - 2 LEDs (Note 11 & 12)

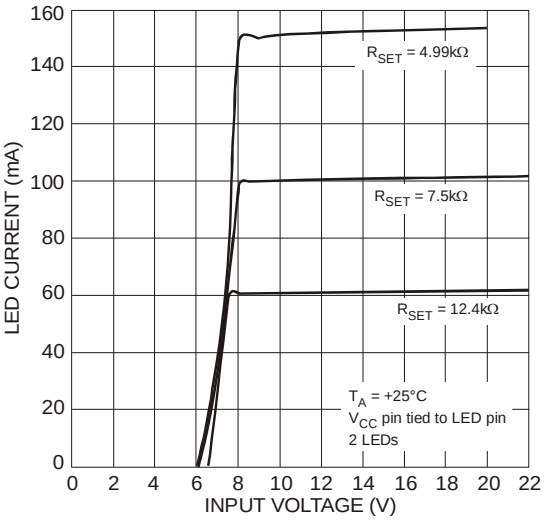

Figure 6 LED Current vs. Input Voltage 2 LEDs - High Side Drive (Notes 11, 12 &13)

Notes:
11. These curves have been limited at larger input voltages due to power dissipation.
12. Lower input voltage range is limited by the LED chain voltage
13. The AL5812 has its V_{CC} pin connected to its LED pin, which are connected to the positive input supply voltage. R_{SET} is connected to AL5812 GND pin, which is connected to the anode of the LED chain. This creates a high side driver of the LED chain. See Figure 15.

© Diodes Incorporated

NEW PRODUCT

Typical Performance Characteristics (cont.)

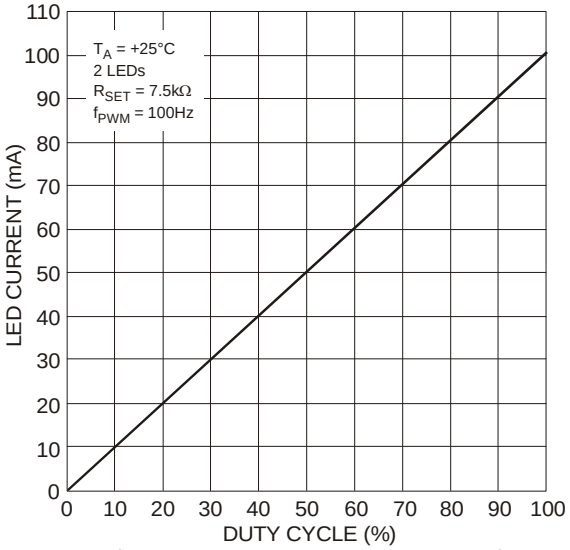

Figure 7 LED Current vs. PWM Duty Cycle

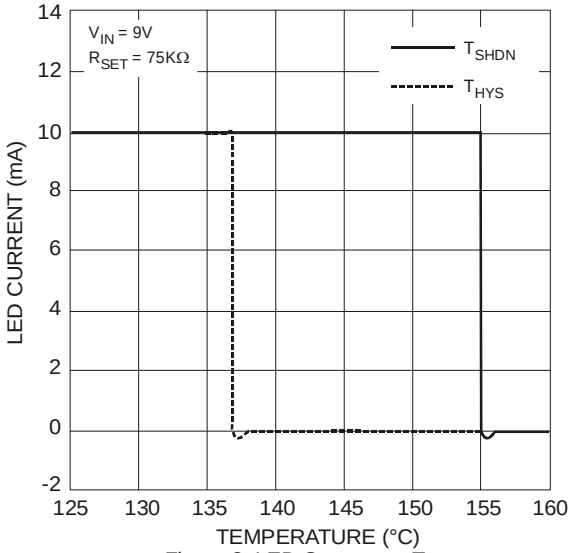

Figure 8 LED Current vs. T_{SHDN}

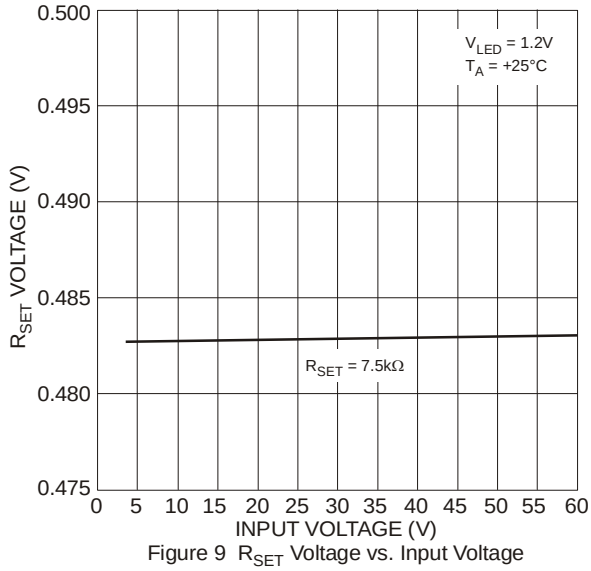

Figure 9 R_{SET} Voltage vs. Input Voltage

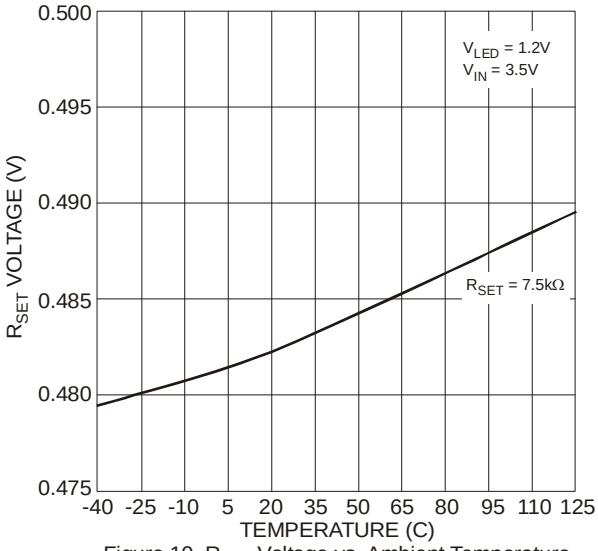

Figure 10 R_{SET} Voltage vs. Ambient Temperature

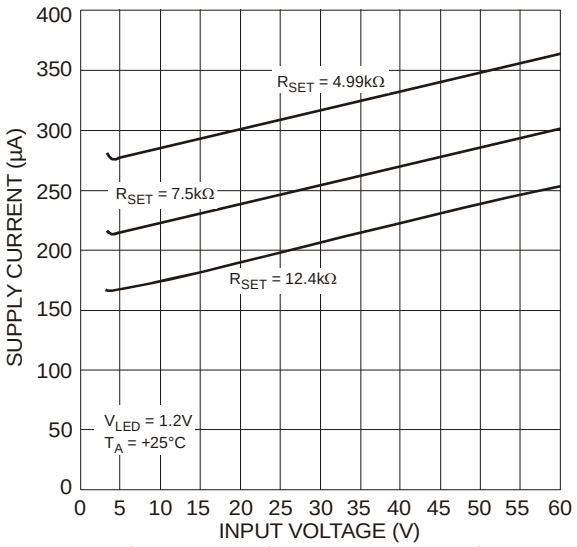

Figure 11 Supply Current vs. Input Voltage

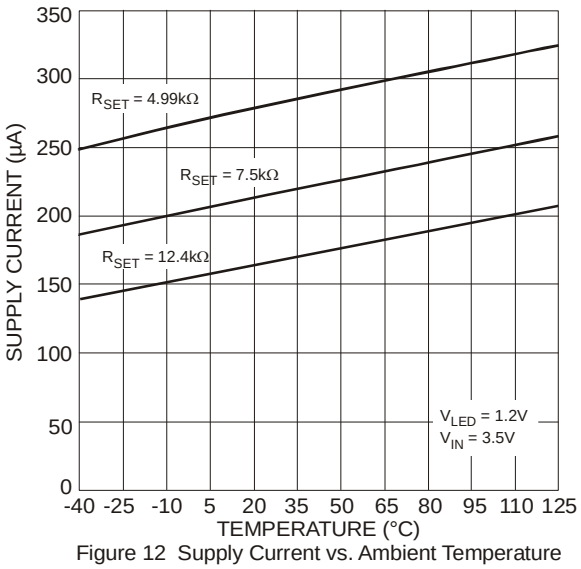

Figure 12 Supply Current vs. Ambient Temperature

© Diodes Incorporated

NEW PRODUCT

Application Information

Description

The AL5812 is a Linear LED driver and in normal operation has the LEDs connected to the same potential as its V_{CC} pin and regulates the LED current by sinking current into to its LED pin see Figure 13.

The LED current is set by the use of an external resistor, R_{SET}, connected from the R_{SET} pin to GND. This resistor supplies the bias current of the AL5812 together with current regulator to set the LED current.

The nominal LED current is determined by this equation:

$$I_{LED} = 1500 * \frac{0.5}{R_{SET}}$$ where 1500 is the current ratio between the LED pin current and R_{SET} pin current.

With R_{SET} = 7.5k

$$I_{LED} = 1500 * \frac{0.5}{7.5k} = 100mA$$

The AL5812 with its 60V capability on its supply pin, V_{CC}, and its LED drive pin allows it to operate from supply rails up to 60V and/or directly drive LED chains up to 60V as shown in Figures 13 and 14. The voltage applied to the V_{CC} pin can be greater or lower than the voltage applied to the LED string. Figure 14 shows where you might control it from a 5-V rail but power the rails from a 12V rail.

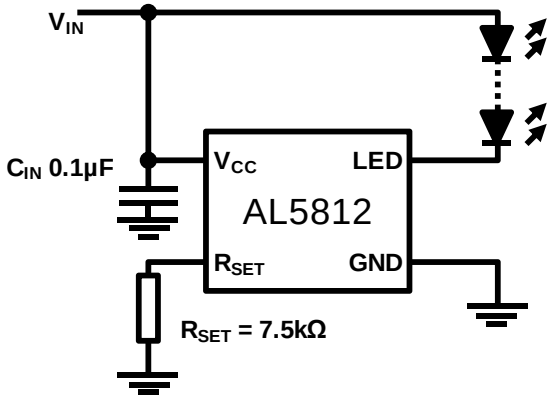

Figure 13 Low Side Current LED Setting

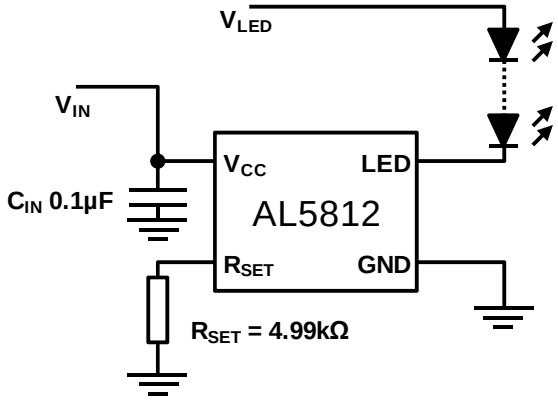

Figure 14 Low Side Drive – Separate Supplies

High Voltage Operation

An extension of Figure 14 is to derive the power for the AL5812 from the LED chain itself see Figure 15. LED chains greater than 60V can be driven in this manner as long PWM dimming is not utilized.

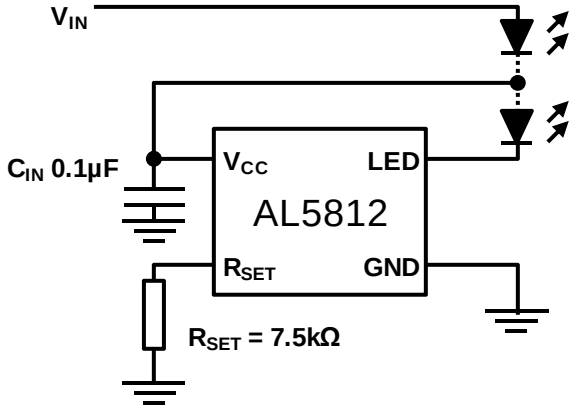

Figure 15 Low Side LED String Tapping

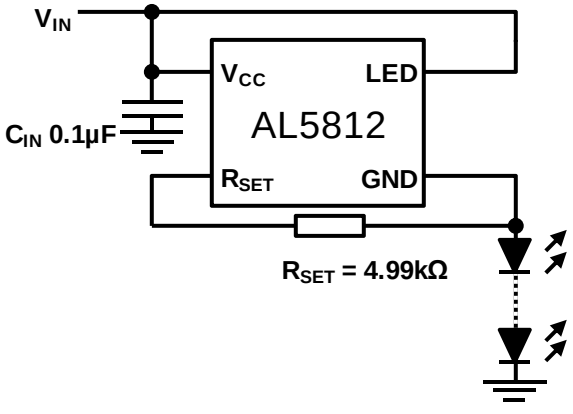

Figure 16 High Side Current LED String

The AL5812 can also be used on the high side of the LEDs, see Figure 16. This is a simple way of extending the maximum LED chain voltage, however, it does increase the minimum system input voltage to:

$V_{IN(min)} = V_{LED_CHAIN} + 3.5V$.

Where

V_{LED_CHAIN} is the LED chain voltage.

© Diodes Incorporated

NEW PRODUCT

Application Information (cont.)

PWM Dimming

The AL5812 can be used to provide LED current dimming driving the R_{SET} pin via the current setting resistor (R_{SET}) and a series MOSFET switch to ground (Figure 17). The R_{SET} pin current is then effectively switched on and off causing the LED current to turn on and off. The linearity is shown in Figure 18.

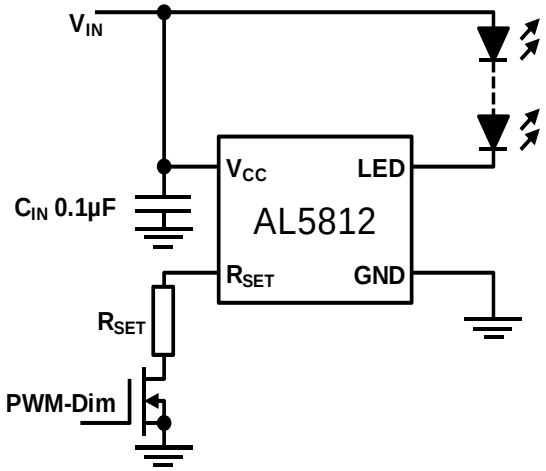

Figure 17 PWM Dimming

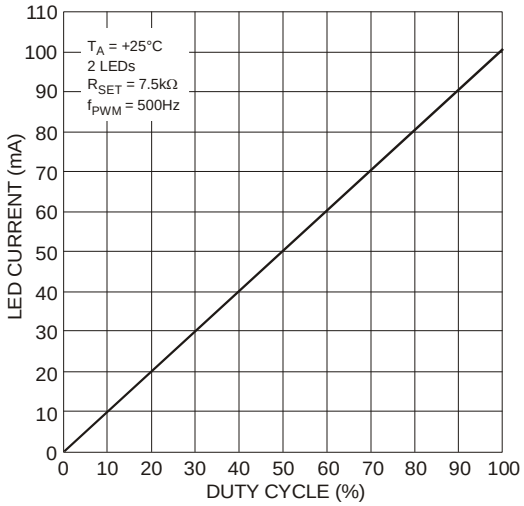

Figure 18 PWM Dimming Linearity

Thermal Considerations

When designing linear LED drivers careful consideration must be given to:

1. the power dissipation within the LED driver
   and
2. PCB layout/heat sinking.

A Linear LED driver has to be able to handle the large potential input voltage variations due to the supply voltage tolerance and also the variation in LED forward voltage due to binning and temperature.

This can result in a large potential difference across the LED driver resulting in a larger than anticipated power dissipation.

For example in an 12V powered system with a 5% output voltage tolerance; the input voltage could typically vary from 12.6V down to 11.4V driving 3 LEDs with a voltage varying from 3V to 3.5V at 100mA. This means that the LED driver has to cope with a voltage drop across varying from approximately 3.6V to 0.9V. This means that the power dissipation of the AL5812 could be as much as 366mW.

Figure 19 below shows how the AL5812's power dissipation capability varies with package; these values will vary with PCB size and area of metal associated with the ground plane used for heat sinking. By increasing the area on the top layer the thermal impedance of both packages could be improved.

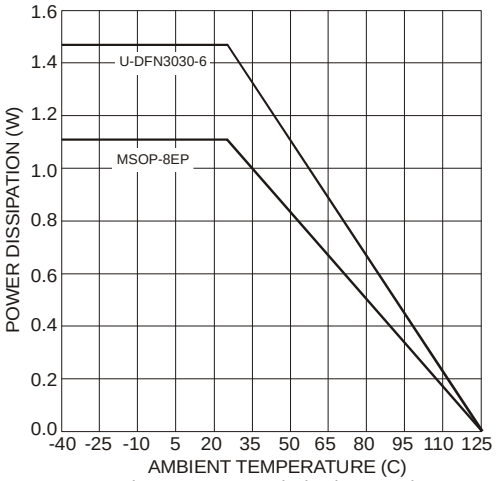

Figure 19 Power Dissipation Derating

© Diodes Incorporated

NEW PRODUCT

Ordering Information

AL5812 XX - XX

Package	Packing
FF : U-DFN3030-6	7 : 7” Tape & Reel
MP : MSOP-8EP	13 : 13” Tape & Reel

Device	Package Code	Packaging	7”/13” Tape and Reel	
			Quantity	Part Number Suffix
AL5812MP-13	MP	MSOP-8EP	2500/Tape & Reel	-13
AL5812FF-7	FF	U-DFN3030-6	3000/Tape & Reel	-7

Marking Information

(1) MSOP-8EP

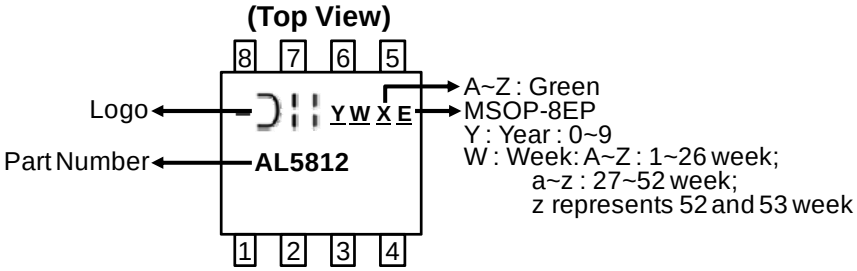

(2) U-DFN3030-6

(Top View)

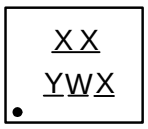

XX : Identification Code
Y : Year : 0~9
W : Week : A~Z : 1~26 week;
a~z : 27~52 week; z represents
52 and 53 week
X : A~Z : Green

Part Number	Package	Identification Code
AL5812FF-7	U-DFN3030-6	B9

© Diodes Incorporated

NEW PRODUCT

Package Outline Dimensions (All dimensions in mm.)

Please see AP02002 at http://www.diodes.com/datasheets/ap02002.pdf for latest version.

(1) MSOP-8EP

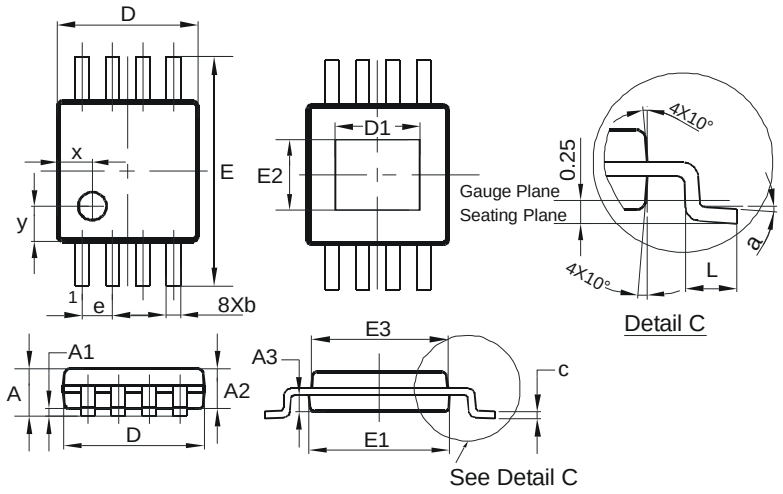

MSOP-8EP			
Dim	**Min**	**Max**	**Typ**
A	-	1.10	-
A1	0.05	0.15	0.10
A2	0.75	0.95	0.86
A3	0.29	0.49	0.39
b	0.22	0.38	0.30
c	0.08	0.23	0.15
D	2.90	3.10	3.00
D1	1.60	2.00	1.80
E	4.70	5.10	4.90
E1	2.90	3.10	3.00
E2	1.30	1.70	1.50
E3	2.85	3.05	2.95
e	-	-	0.65
L	0.40	0.80	0.60
a	0°	8°	4°
x	-	-	0.750
y	-	-	0.750
All Dimensions in mm			

(2) U-DFN3030-6

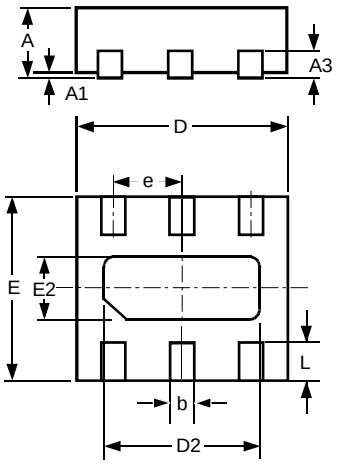

U-DFN3030-6			
Dim	**Min**	**Max**	**Typ**
A	0.57	0.63	0.60
A1	0	0.05	0.02
A3	—	—	0.15
b	0.29	0.39	0.34
D	2.9	3.1	3.0
D2	2.65	2.85	2.75
E	2.9	3.1	3.0
e	—	—	1.205
E2	1.76	1.96	1.86
L	0.30	0.60	0.45
All Dimensions in mm			

© Diodes Incorporated

NEW PRODUCT

Suggested Pad Layout

Please see AP02001 at http://www.diodes.com/datasheets/ap02001.pdf for latest version.

(1) MSOP-8EP

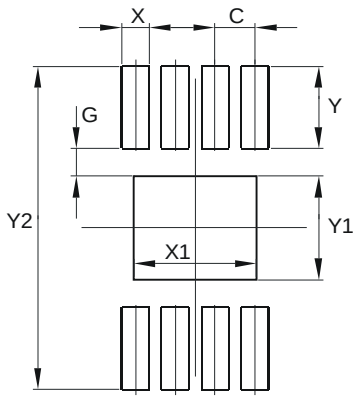

Dimensions	Value (in mm)
C	0.650
G	0.450
X	0.450
X1	2.000
Y	1.350
Y1	1.700
Y2	5.300

(2) U-DFN3030-6

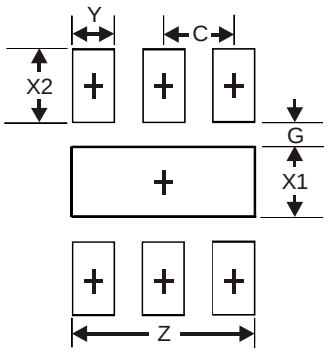

Dimensions	Value (in mm)
Z	2.75
G	0.57
X1	1.86
X2	0.45
Y	0.34
C	1.205

© Diodes Incorporated

NEW PRODUCT

IMPORTANT NOTICE

DIODES INCORPORATED MAKES NO WARRANTY OF ANY KIND, EXPRESS OR IMPLIED, WITH REGARDS TO THIS DOCUMENT, INCLUDING, BUT NOT LIMITED TO, THE IMPLIED WARRANTIES OF MERCHANTABILITY AND FITNESS FOR A PARTICULAR PURPOSE (AND THEIR EQUIVALENTS UNDER THE LAWS OF ANY JURISDICTION).

Diodes Incorporated and its subsidiaries reserve the right to make modifications, enhancements, improvements, corrections or other changes without further notice to this document and any product described herein. Diodes Incorporated does not assume any liability arising out of the application or use of this document or any product described herein; neither does Diodes Incorporated convey any license under its patent or trademark rights, nor the rights of others. Any Customer or user of this document or products described herein in such applications shall assume all risks of such use and will agree to hold Diodes Incorporated and all the companies whose products are represented on Diodes Incorporated website, harmless against all damages.

Diodes Incorporated does not warrant or accept any liability whatsoever in respect of any products purchased through unauthorized sales channel. Should Customers purchase or use Diodes Incorporated products for any unintended or unauthorized application, Customers shall indemnify and hold Diodes Incorporated and its representatives harmless against all claims, damages, expenses, and attorney fees arising out of, directly or indirectly, any claim of personal injury or death associated with such unintended or unauthorized application.

Products described herein may be covered by one or more United States, international or foreign patents pending. Product names and markings noted herein may also be covered by one or more United States, international or foreign trademarks.

LIFE SUPPORT

Diodes Incorporated products are specifically not authorized for use as critical components in life support devices or systems without the express written approval of the Chief Executive Officer of Diodes Incorporated. As used herein:

A. Life support devices or systems are devices or systems which:

1. are intended to implant into the body, or
2. support or sustain life and whose failure to perform when properly used in accordance with instructions for use provided in the labeling can be reasonably expected to result in significant injury to the user.

B. A critical component is any component in a life support device or system whose failure to perform can be reasonably expected to cause the failure of the life support device or to affect its safety or effectiveness.

Customers represent that they have all necessary expertise in the safety and regulatory ramifications of their life support devices or systems, and acknowledge and agree that they are solely responsible for all legal, regulatory and safety-related requirements concerning their products and any use of Diodes Incorporated products in such safety-critical, life support devices or systems, notwithstanding any devices- or systems-related information or support that may be provided by Diodes Incorporated. Further, Customers must fully indemnify Diodes Incorporated and its representatives against any damages arising out of the use of Diodes Incorporated products in such safety-critical, life support devices or systems.

Copyright © 2012, Diodes Incorporated

www.diodes.com