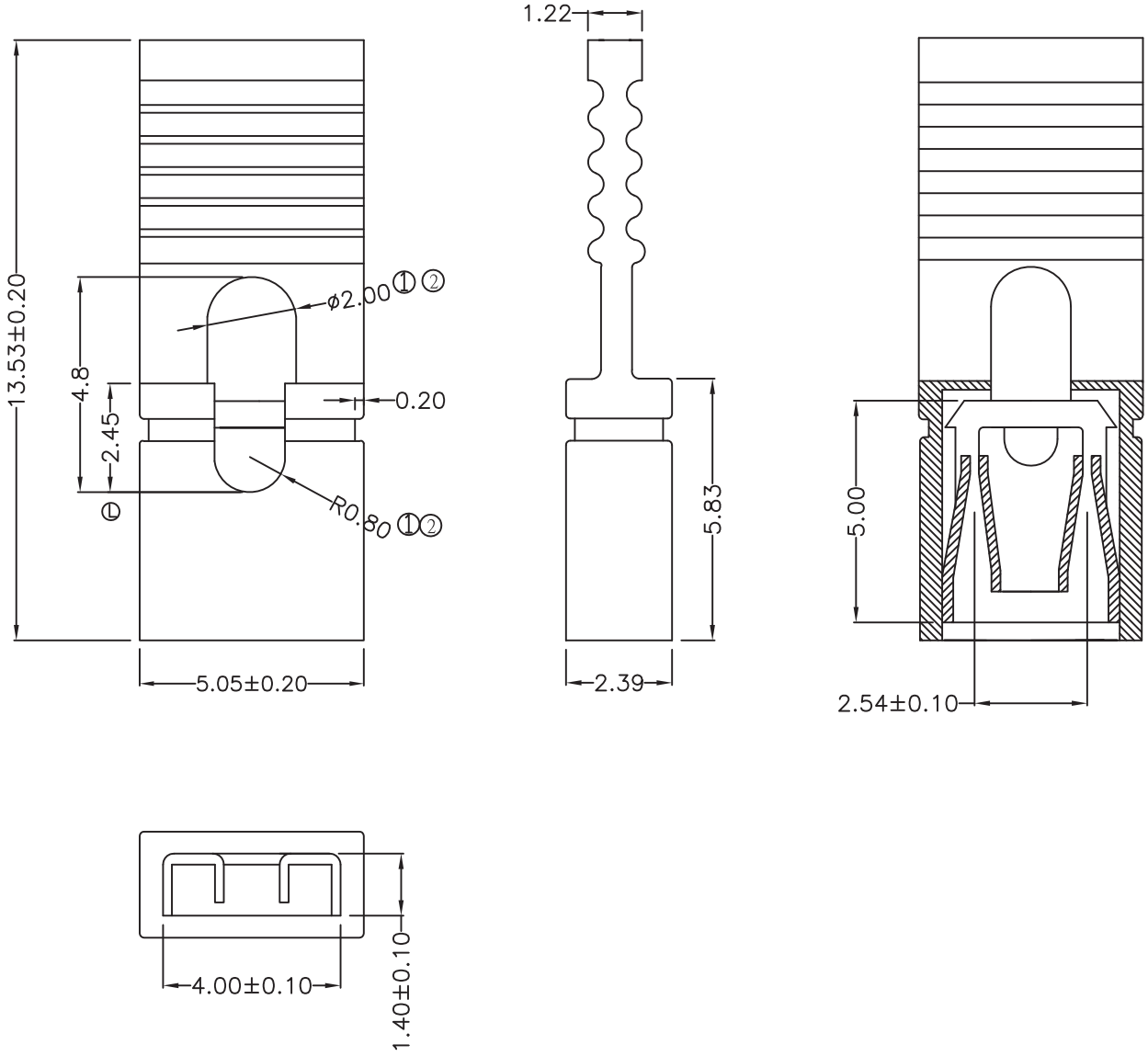

Material:

- Insulation: Nylon 66, UL94V-0
- Contact: Brass

Electrical:

- Current Rating: 3.0A Max.
- Contact Resistance: 30MΩ Max.
- Insulation Resistance: 1,000MΩ Min.
- Dielectric Voltage: 1,000V R.M.S. @1min.
- Operating and Storage Temperature: -40°C~+105°C

Unit: MM±0.10MM

RoHS Compliant

ITEM NO.

AKSPLT-G-BLK-30-R

TITLE Mini Jumper - w/Removal Grip, 2.54MM pitch, 30µ" contact plating, Black

ASSMANN Electronics, Inc.
1840 W. Drake Drive, Suite 101 • Tempe, AZ 85283
Toll Free: 1-877-277-6266 • Email: info@usa-assmann.com

THIS DRAWING IS UNPUBLISHED
©Copyright 2010 by Assmann Electronic Components
All International Rights Reserved