ACCUTEK
MICROCIRCUIT CORPORATION

AK591024AS / AK591024AG
1,048,576 Word X 9 bit, CMOS Dynamic Random Access Memory

DESCRIPTION

The Accutek AK591024 high density memory modules is a random access memory organized in 1 Meg x 9 bit words. The assembly consists of two 1 Meg x 4 and one 1 Meg x 1 DRAMs in surface mount packages mounted on the front side of a printed circuit board. The module can be configured as a leadless 30 pad SIM or a leaded 30 pin SIP. This packaging approach provides a better than 6 to 1 density increase over standard DIP packaging.

The operation of the AK591024 is identical to two 1 Meg x 4 plus one 1 Meg x 1 DRAMs. For the lower eight bits, the data input is tied to data output and brought out separately for each 1 Meg x 4 device, with common $\overline{RAS}$, $\overline{CAS}$ and $\overline{WE}$ control. The $\overline{OE}$ pins are tied to Vss which dictates the use of early-write cycles to prevent contention of D and Q. Since the Write-Enable ($\overline{WE}$) signal must always go low before $\overline{CAS}$ in a write cycle, Read-Write and Read-Modify-Write operation is not possible. For the ninth bit, the data input (D_9) and data output (Q_9) pins are brought out separately and controlled by a separate $\overline{PCAS}$ for that bit. Bit nine is generally used for parity.

Front View

30-Pin SIM

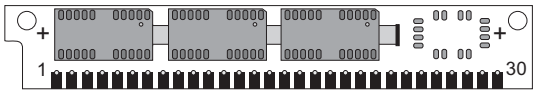

30-Pin SIP

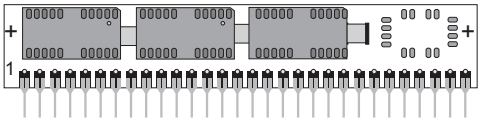

FEATURES

- 1,048,576 x 9 bit organization
- Optional 30 Pad SIM (Single In-Line Module) or 30 Pin leaded SIP (Single In-Line Package)
- JEDEC standard pinout
- Common $\overline{CAS}$, $\overline{RAS}$ and $\overline{WE}$ control for the lower eight bits
- 1024 refresh cycles/16ms
- Separate $\overline{PCAS}$ control for D_9 and Q_9
- Power:
  1.650 Watt Max Active (60 nS)
  1.485 Watt Max Active (70 nS)
  1.265 Watt Max Active (80 nS)
  23.5 mWatt Standby (max)
- Operating free air temperature: 0° to 70^oC
- Upward compatible with and AK594096 and AK5916384
- Downward compaitble with AK59256
- Functionally and Pin compatible with AK491024

PIN NOMENCLATURE

DQ_1 - DQ_8	Data In / Data Out
D_9	Data In
Q_9	Data Out
A_0 - A_9	Address Inputs
$\overline{CAS}$, $\overline{PCAS}$	Column Address Strobe
$\overline{RAS}$	Row Address Strobe
$\overline{WE}$	Write Enable
Vcc	5v Supply
Vss	Ground
NC	No Connect

PIN ASSIGNMENT

PIN #	SYMBOL	PIN #	SYMBOL
1	Vcc	16	DQ5
2	$\overline{CAS}$	17	A8
3	DQ1	18	A9
4	A0	19	NC
5	A1	20	DQ6
6	DQ2	21	$\overline{WE}$
7	A2	22	Vss
8	A3	23	DQ7
9	Vss	24	NC
10	DQ3	25	DQ8
11	A4	26	Q9
12	A5	27	$\overline{RAS}$
13	DQ4	28	$\overline{PCAS}$
14	A6	29	D9
15	A7	30	Vcc

FUNCTIONAL DIAGRAM

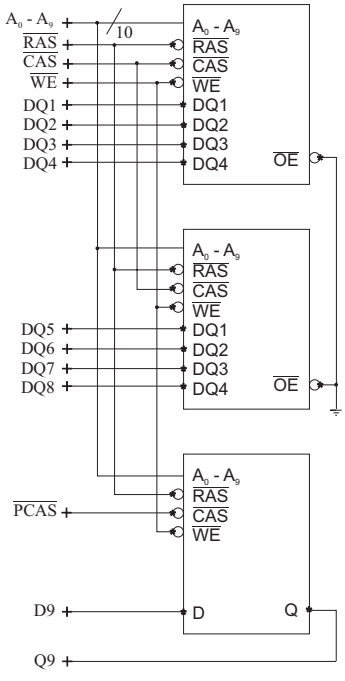

MODULE OPTIONS

Leadless SIM: AK591024ASP
Leaded SIP: AK591024AGP

ORDERING INFORMATION

PART NUMBER CODING INTERPRETATION

Position	1	2	3	4	5	6	7	8

1 Product

AK = Accutek Memory

2 Type

4 = Dynamic RAM
5 = CMOS Dynamic RAM
6 = Static RAM

3 Organization/Word Width

1 = by 1 16 = by 16
4 = by 4 32 = by 32
8 = by 8 36 = by 36
9 = by 9

4 Size/Bits Depth

64 = 64K 4096 = 4 MEG
256 = 256K 8192 = 8 MEG
1024 = 1 MEG 16384 = 16 MEG

5 Package Type

G = Single In-Line Package (SIP)
S = Single In-Line Module (SIM)
D = Dual In-Line Package (DIP)
W = .050 inch Pitch Edge Connect
Z = Zig-Zag In-Line Package (ZIP)

6 Special Designation

P = Page Mode
N = Nibble Mode
K = Static Column Mode
W = Write Per Bit Mode
V = Video Ram

7 Separator

- = Commercial 0^0C to +70^0C
M = Military Equivalent Screened (-55^0C to +125^0C)
I = Industrial Temperature Tested (-45^0C to +85^0C)
X = Burned In

8 Speed (first two significant digits)

DRAMS			SRAMS		
50	=	50 nS	8	=	8 nS
60	=	60 nS	10	=	10 nS
70	=	70 nS	12	=	12 nS
80	=	80 nS	15	=	15 nS

The numbers and coding on this page do not include all variations available but are show as examples of the most widely used variations. Contact Accutek if other information is required.

EXAMPLES:

AK591024AGP-60

1 Meg x 9, 60 nSEC, DRAM, SIP Configuration, 30 Pin

AK591024ASP-70

1 Meg x 9, 70 nSEC, DRAM, SIM Configuration, 30 Pin

ACCUTEK
MICROCIRCUIT CORPORATION

5 NEW PASTURE ROAD
NEWBURYPORT, MA 01950-4040
PHONE: 978-465-6200 FAX: 978-462-3396
Email: sales@accutekmicro.com
Internet: www.accutekmicro.com

MECHANICAL DIMENSIONS

Inches

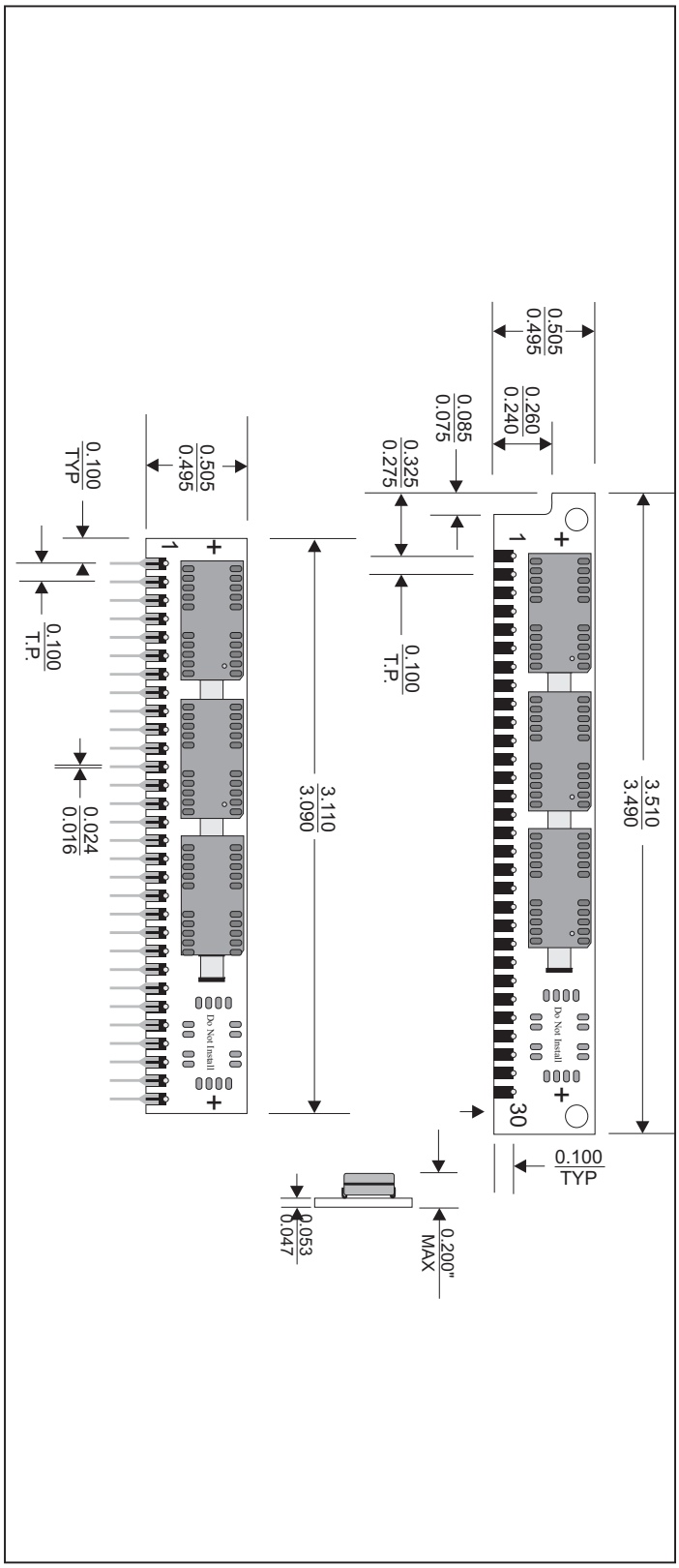

Accutek reserves the right to make changes in specifications at any time and without notice. Accutek does not assume any responsibility for the use of any circuitry described; no circuit patent licenses are implied. Preliminary data sheets contain minimum and maximum limits based upon design objectives, which are subject to change upon full characterization over the specific operating conditions.