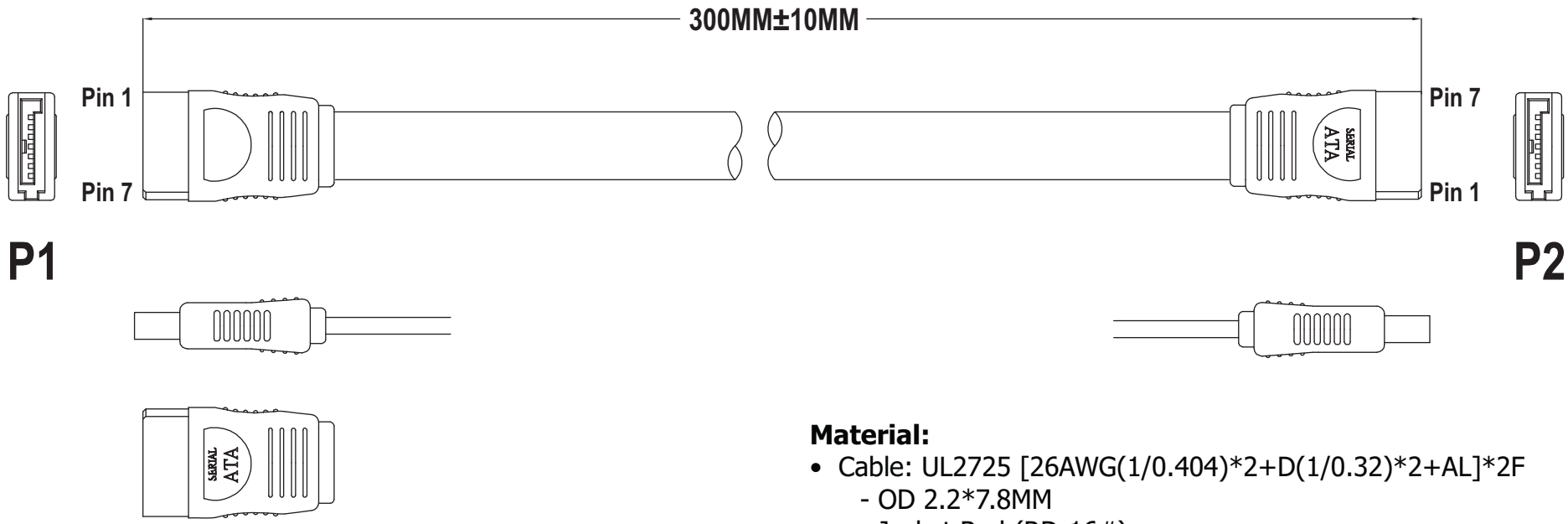

Material:

- Cable: UL2725 [26AWG(1/0.404)*2+D(1/0.32)*2+AL]*2F
  - OD 2.2*7.8MM
  - Jacket Red (RD-16#)
- P1 & P2 Connectors: Serial ATA 7-pin/Female Crimp Type
  - Pin 15μ"
  - Insulator Black
- Jacket: PVC 45P, Black
- Unplug/Plug cycles is 50 times

Electrical:

- 100% Open, Short, MisWire Test
- Contact Resistance: 1Ω Min.
- Insulation Resistance: 10MΩ Min.
- Hi-Pot 300V DC/0.1 Sec

Unit: MM±0.25MM

Pin Assignment

P1		P2
1	GND	1
2		2
3		3
4	GND	4
5		5
6		6
7	GND	7

RoHS Complaint

Scale	1:1
TOLERANCE	
X.X	±0.40
X.XX	±0.25
X.XXX	±0.15
Angle	±3°

Modification	Date	Name

		Name
Drawn	12.29.11	Chappell
Approved		

ASSMANN WSW components

Item No.

AK-SATA-030-R

Title: Serial ATA (SATA) Connection Cable - 0.30 Meter

Drawing No.

rev00

Replace

Sheet