SURFACE MOUNT UNSHIELDED POWER INDUCTORS

AISC - 1210H



FEATURES:

- Construction: Ceramic or Ferrite
- Excellent SRF
- High Frequency Design
- Excellent Q values

OPTIONS:

- Tape & Reel is standard
- Add L for no Cap, F for Ferrite Base
- Add G for Gold Plated Terminal
- Add S for Solder Plated Terminal

APPLICATIONS:

- Wireless Communications Equipment
- Networking System
- Computer Products and Peripherals

ELECTRICAL SPECIFICATIONS:

Part Number	L (µH)	L Test Freq (MHz)	Q Min	Q Test Freq (MHz)	SRF Min (MHz)	R_{DC} Max (Ω)	I_{DC} Max (mA)
1210H Series							
AISC-1210H-R10M	0.10	1	20	25.2	198	0.25	720
AISC-1210H-R18M	0.18	1	20	25.2	198	0.25	660
AISC-1210H-R27M	0.24	1	25	25.2	198	0.25	620
AISC-1210H-R39M	0.39	1	25	25.2	198	0.25	550
AISC-1210H-R56M	0.56	1	30	25.2	160	0.25	550
AISC-1210H-R68M	0.68	1	30	25.2	160	0.25	480
AISC-1210H-R82M	0.82	1	30	25.2	120	0.25	460
AISC-1210H-1R0M	1.0	1	20	1	100	0.40	450
AISC-1210H-1R2M	1.2	1	20	1	100	0.50	130
AISC-1210H-1R5K	1.5	1	20	1	75	0.60	400
AISC-1210H-1R8K	1.8	1	20	1	60	0.70	390
AISC-1210H-2R2K	2.2	1	20	1	50	0.80	370
AISC-1210H-2R7K	2.7	1	20	1	44	0.90	330
AISC-1210H-3R3K	3.3	1	20	1	40	1.0	300
AISC-1210H-3R9K	3.9	1	20	1	35	1.1	290
AISC-1210H-4R7K	4.7	1	20	1	32	1.2	270
AISC-1210H-5R6K	5.6	1	20	1	28	1.3	250
AISC-1210H-6R8K	6.8	1	20	1	25	1.5	240
AISC-1210H-8R2K	8.2	1	20	1	23	1.6	225
AISC-1210H-100K	10	1	35	1	20	1.8	190
AISC-1210H-120K	12	1	35	1	18	2.0	180
AISC-1210H-150K	15	1	35	1	16	2.2	170
AISC-1210H-180K	18	1	35	1	15	2.5	165
AISC-1210H-220K	22	1	35	1	14	2.8	150
AISC-1210H-270K	27	1	35	1	13	3.1	125
AISC-1210H-330K	33	1	35	1	12	3.5	115
AISC-1210H-390K	39	1	40	1	11	3.9	110
AISC-1210H-470K	47	1	40	1	11	4.3	100
AISC-1210H-560K	56	1	40	1	10	4.9	90
AISC-1210H-680K	68	1	40	1	9	5.5	85
AISC-1210H-820K	82	1	40	1	9	6.2	80
AISC-1210H-101K	100	1	40	0.796	8	6.8	78
AISC-1210H-121K	120	1	40	0.796	8	7.8	72
AISC-1210H-151K	150	1	40	0.796	7	9.2	70
AISC-1210H-181K	180	1	40	0.796	7	10	70
AISC-1210H-221K	220	1	40	0.796	6	12	65
AISC-1210H-271K	270	1	40	0.796	6	13	65
AISC-1210H-331K	330	1	40	0.796	5	13	65
AISC-1210H-391K	390	1	50	0.796	5	22	50
AISC-1210H-471K	470	0.1	50	0.796	5	25	45
AISC-1210H-561K	560	0.1	50	0.796	5	28	40

Note: 1. J=±5%, K=±10%, M=±20%

OUTLINE DRAWING:

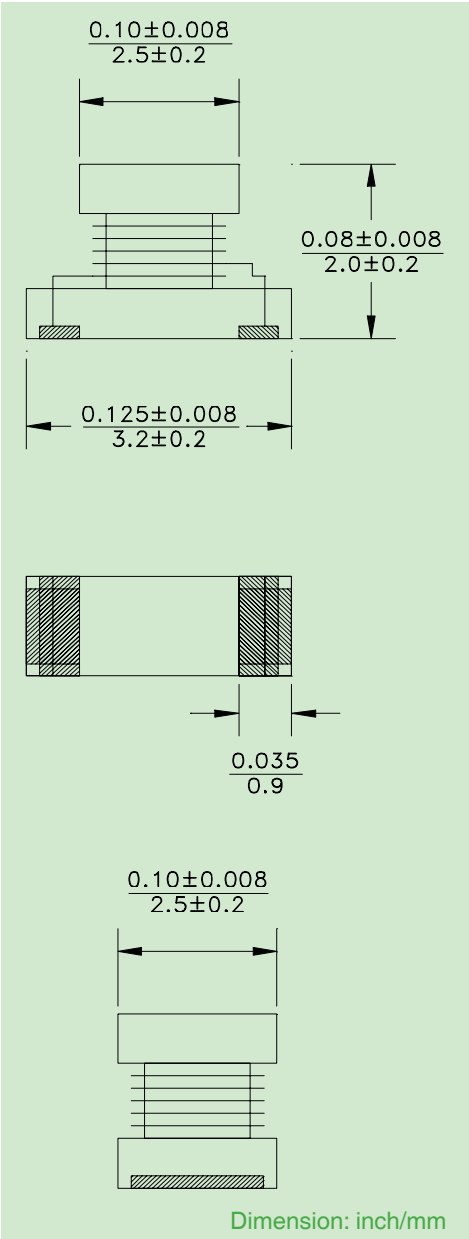

Dimension: inch/mm

TECHNICAL INFORMATION:

- AISC-1210H-XXXK Typcial Values Only (-XXX equal inductance value)
- Add -T for tape and reel
- Operating Temperature: **-40°C to +125°C**
- Inductance drop 10% typical at I_{DC}

TOLERANCES:
UNLESS OTHERWISE SPECIFIED:
inch: .XX: ± 0.015 .XXX: ± 0.010
mm: X,X: ±0,38 X,XX: ± 0.25

30332 Esperanza, Rancho Santa Margarita, California 92688
tel 949-546-8000 | fax 949-546-8001 | www.abracon.com