AIMB-272

Intel® Core™ i7/i5/i3/Celeron uFC-PGA988 Mini-ITX with CRT/DVI/HDMI/LVDS, 6 COM, Dual LAN, PCIe x16

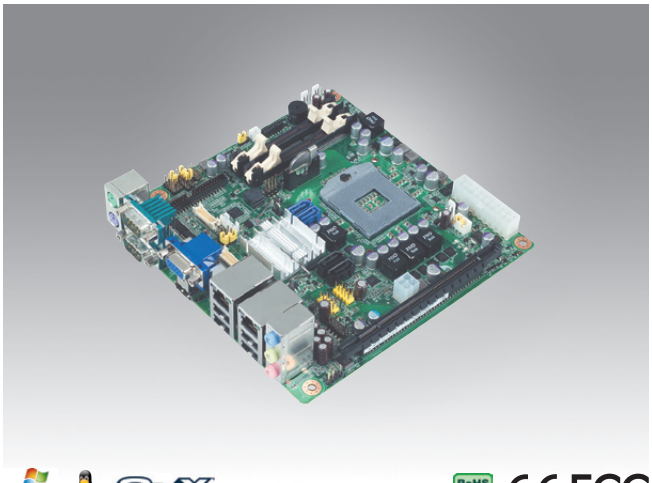

Features

- Supports Intel® Core™ i7/i5/i3 mobile processor (PGA) with Intel QM67/HM65 chipset
- Supports dual display of DVI, HDMI, LVDS, CRT
- Supports PCIe x16 (Gen 2) and mini PCIe
- Supports Inel vPro, AMT 7.0, PECI 3.0, Software RAID 0,1,5,10, TPM 1.2 (optional)
- Supports embedded software APIs and Utilities

Software APIs: SMBus, H/W Monitor, Watchdog, GPIO, Brightness

Utilities: BIOS flash, Monitoring, Flash Lock

Specifications

Processor System	CPU	Intel Core i7-2710QE	Core i5-2510E	Core i3-2330E	Celeron B810	
	Core Number	4	2	2	2	
	Max Speed	2.1 GHz	2.5 GHz	2.2 GHz	1.6 GHz	
	L3 Cache	6 MB	3 MB	3 MB	2 MB	
	Chipset	QM67/HM65				
	BIOS	AMI EFI 64 Mbit SPI				
Expansion Slot	PCI	-				
	Mini-PCIe	1				
	PCIe x16 (Gen2)	8 GB/s per direction, 1 slot				
Memory	Technology	Dual Channel DDR3 1066/1333 MHz SDRAM				
	Max. Capacity	8 GB				
	Socket	2x 204 PIN DDR3 SODIMM (Non-ECC)				
Graphics	Controller	Integrated Gfx Gen5.75, supports DirectX 10 and OpenGL 2.1				
	VRAM	Shared system memory, 2 GB and above, total system memory shared 1 GB maximum video memory				
	CRT	Yes, supports max. resolution 2048 x 1536				
	LVDS	Single channel 24-bit/dual channel 48-bit LVDS				
	HDMI	Supports HDMI 1.4, 1650 Mbps/channel with 165 MHz				
	DVI	Yes, supports max resolution 1920 x 1200				
	Dual Display	CRT+LVDS, CRT+DVI, DVI+HDMI, LVDS+HDMI, CRT+HDMI, DVI+LVDS				
Ethernet	Interface	10/100/1000 Mbps				
	Controller	GbE LAN1: Intel 82579LM, LAN2: Intel 82583V				
	Connector	RJ-45 x 2				
SATA	Max Data Transfer Rate	600 MB/s (SATA 3.0)/ 300 MB/s (SATA 2.0)				
	Channel	2/2				
Rear I/O	VGA	1				
	HDMI	1				
	Ethernet	2				
	USB	4 (USB 2.0 compliant)				
	Audio	3 (Mic-in, Line-out, Line-in)				
	Serial	2 (RS-232)				
	PS/2	2 (1 x keyboard and 1 x mouse)				
Internal Connector	USB	4 (USB 2.0 compliant)				
	LVDS/inverter	1				
	DVI	1				
	Serial	4 (RS-232)				
	IDE	-				
	SATA	2 (SATA 3.0), 2 (SATA 2.0)				
	Mini-PCIe	1				
	Cfast	1				
	Parallel	-				
	IrDA	-				
	GPIO	8-bit				
Watchdog Timer	Output	System reset				
	Interval	Programmable 1 ~ 255 sec/min				
Power Requirements	Power On	Intel Core i7-2710QE 2.1 GHz, 8 GB DDR3 1333 MHz SDRAM				
		5 V	3.3 V	12 V	5 Vsb	-12 V
		1.514 A	1.063 A	3.9 A	0.78 A	0.08 A
Environment		Operating		Non-Operating		
	Temperature	0 ~ 60° C (32 ~ 140° F), depends on CPU speed and cooler solution		-20 ~ 70° C (-4 ~ 158° F)		
Physical Characteristics	Dimensions	170 mm x 170 mm (6.69" x 6.69")				

All product specifications are subject to change without notice

Last updated : 20-Jun-2012

Block Diagram

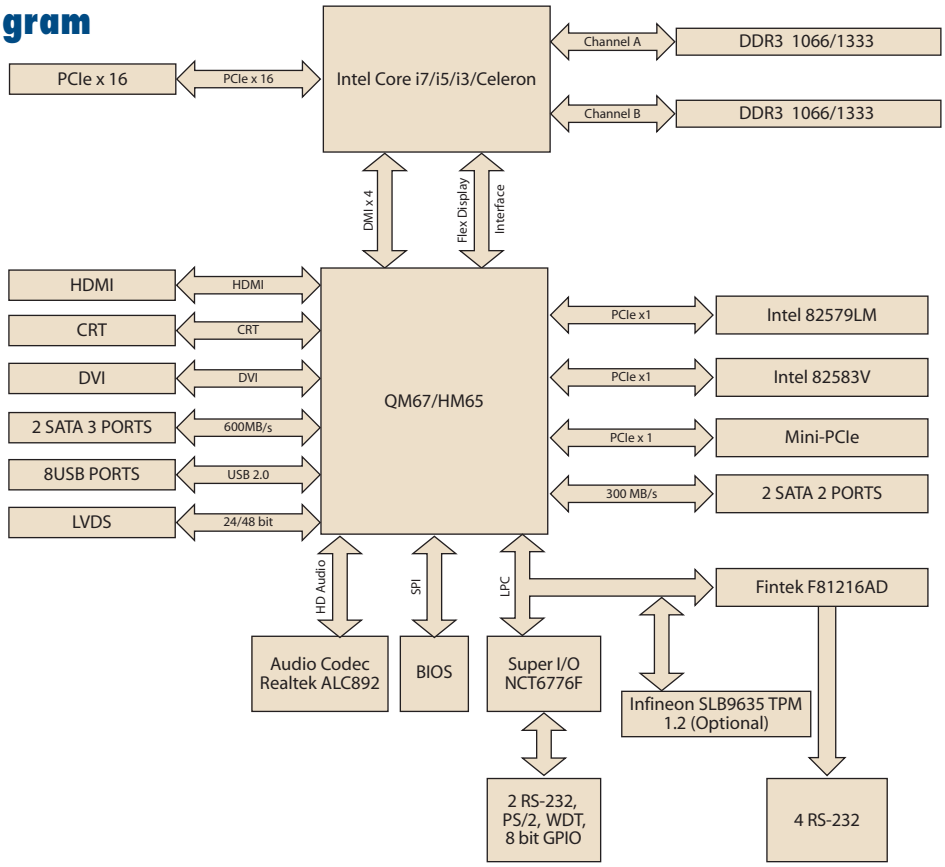

Ordering Information

Part Number	Chipset	CRT	DVI	LVDS	HDMI	GbE LAN	COM
AIMB-272G2-00A1E	QM67	Yes	Yes	Yes	Yes	2	6
AIMB-272VG-00A1E	HM65	Yes	Yes	No	Yes	1	6

Packing List

Part Number	Description	Quantity
1700003194	SATA HDD cable	2
1703150102	SATA power cable	2
1960051292N001	CPU cooler	1
1701400181	1-to-4 serial ports cable kit, 18cm	1
1960019192T100	I/O port bracket	1
2002027210	Startup manual	1
20660272000	Driver CD	1

Optional Accessories

Part Number	Description
1700003195	USB cable with two ports, 17.5 cm
1700002204	USB cable with two ports, 27 cm
1700008461	USB cable with four ports, 30.5 cm
1700008822	DVI cable

Embedded OS/API

OS/API	Part Number	Description
Win XPE	2070010799	XPE WES2009 AIMB-272 V4.0 ENG with Acronis
	2070011030	IMG WES09 AIMB-272 V4.0 ENG RUS ATIP
Software API	TBD	SUSI V3.0 SW API for AIMB-272 XP

I/O View



AIMB-272G2-00A1E
AIMB-272VG-00A1E