AIF Series

600 Watts

Total Power: **600 Watts (12V@50Amps)**
Input Voltage: **300V**
# of Outputs: **Single**



Special Features

- 600W Continuous power at 100°C baseplate temperature
- 108W/in^3 (6.6W/cm^3)
- High efficiency - up to 90%
- Low output ripple and noise
- Positive and Negative enable function
- Excellent transient response
- OVP, OCP, V Adj control with ALP™ analog mode linear control, or through I^{2}C bus with digital mode control.
- Paralleable with accurate current sharing
- EU Directive 2002/95/EC compliant for RoHS

Safety

UL	60950 Recognized
cUL	60950 Recognized
TUV	EN60950 Licensed
CE	CE Mark

Electrical Specifications

Input	
Input range	250 - 420 VDC
Input surge	450V / 100ms
Efficiency	90%@5.0V (Typical)
Output	
Load Regulation	0.2% typical down to no load
Line Regulation	0.2% typical
Noise / Ripple	100mV typical (below 5V); 2% typical (5V and above)
Remote sense	Up to 0.5V
Output voltage adjust range	+/-20% for 5V and above; +10%/ -50% for below 5V
Transient Response	5% max for 3.3V and above, 150mV for 1.8V, deviation with 25% to 75% full load 250 μS (max) recovery
Current Share Accuracy	3% typical
Overvoltage Protection	115% Vo (nominal)
Current Limit	115% Io maximum
Control	
Voltage Adjust	80 to 120% Vo linear programming for 12V, 15V, 24V, 48V 50% to 110% for 1.8V - 5.0V
Enable	TTL compatible (positive & negative enable options)
Current Limit Adjust	20 to 100% Io linear programming or digital mode control
Clock Input (external sync)	3.3 to 5.5Vp-p @ 800KHz ±10%
Clock Output (internal clock)	4.5Vp-p typical@ 800KHz ±5%
Power Good Identification	High (Vo) = power good
Temperature Monitor Output	10mV/°K (2.73 = 0°C)
Current Monitor Output	0 to 1mA (1mA = 100% $I_{o\ rated}$)
Over Voltage Protection Adjust	110 to 150% Vo linear programming by voltage or resistor, or digital mode control
Notes	

Nominal values apply with sense pins connected and other control pin unconnected.
ALP: Astec Linear Programming

ASTEC

EMERSON Network Power

Environmental Specifications

Operating temperature	-20°C to +100°C (Case temperature)
Start up temperature	-40°C to +100°C (Case temperature)
Storage temperature	-40°C to +125°C
Overtemperature protection	110°C max

Ordering Information

Input Voltage	Output Voltage	Efficiency	Model Number
300V	1.8V @ 120A	80% (Typ)	AIF120Y300
300V	3.3V @ 120A	87% (Typ)	AIF120F300
300V	5.0V @ 80A	90% (Typ)	AIF80A300
300V	12V @ 50A	90% (Typ)	AIF50B300
300V	15V @ 40A	90% (Typ)	AIF40C300
300V	24V @ 25A	90% (Typ)	AIF25H300
300V	48V @ 12.5A	90% (Typ)	AIF12W300

1. For Negative enable, add suffix "-N".
2. For Non-thread hole, add suffix "-NT".
3. For RoHS 6, add suffix "-L". Default is RoHS 5.

Pin Assignments

Input (AC)	Output (DC)	Control Pins
31. Positive	21. Positive	1. +Sense
32. Negative	22. Positive	2. Temp Mon
	23. Positive	3. C Mon
	24. Positive	4. C Share
	25. Negative	5. Clk Out
	26. Negative	6. Clk In
	27. Negative	7. PG/ID
	28. Negative	8. C Lim Adj
		9. OVP Adj
		10. V Adj
		11. Enable
		12. -Sense

Mechanical Drawing

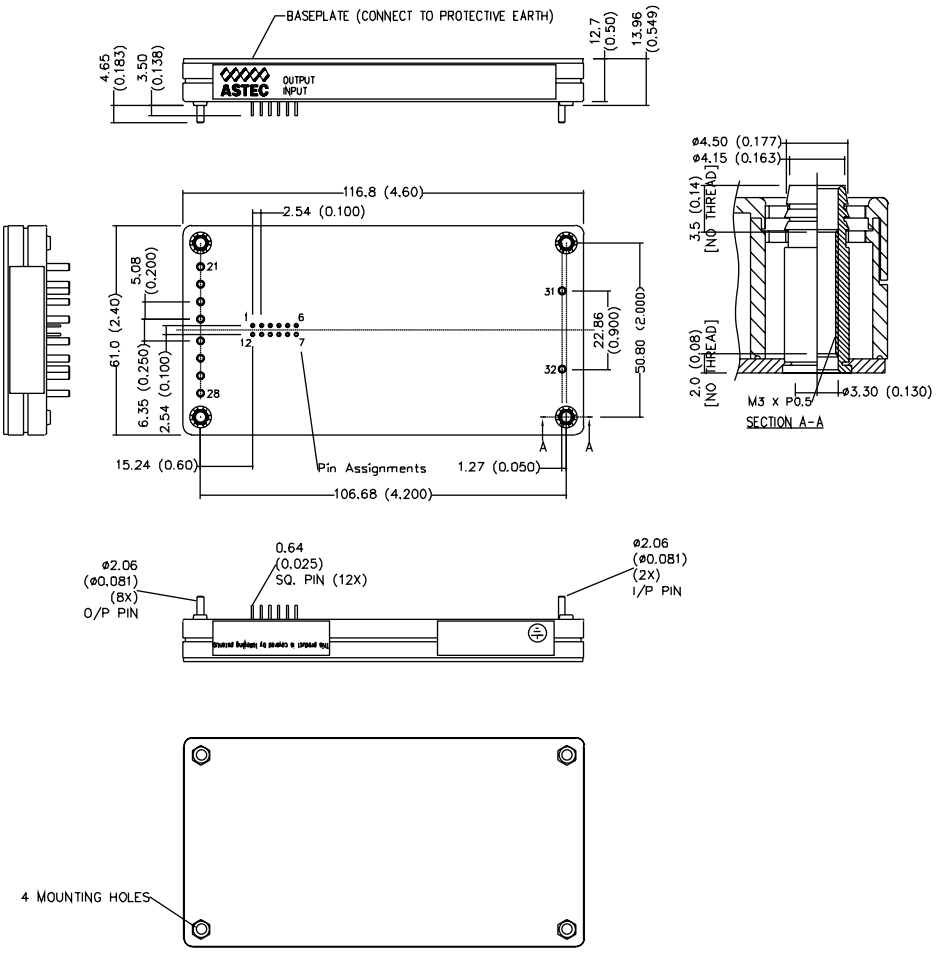

Astec Power

5810 Van Allen Way
Carlsbad, CA 92008
USA
Telephone: +1 760 930 4600
Facsimile: +1 760 930 0698
Technical Support: +1 888 41 ASTEC
or +1 407 241 2752

Waterfront Business Park
Merry Hill, Dudley
West Midlands, DY5 1LX
United Kingdom
Telephone: +44 (0) 1384 842 211
Facsimile: +44 (0) 1384 843 355

Units 2111-2116, Level 21
Tower 1, Metroplaza
223, Hing Fong Road
Kwai Fong, New Territories
Hong Kong
Telephone: +852 2437 9662
Facsimile: +852 2402 4426

For global contact, visit:
www.astecpower.com
technicalsupport@astec.com

While every precaution has been taken to ensure accuracy and completeness in this literature, Astec Power assumes no responsibility, and disclaims all liability for damages resulting from use of this information or for any errors or omissions.

Printed in USA

Emerson Network Power.
The global leader in enabling business-critical continuity.

- AC Power
- Connectivity
- DC Power
- **Embedded Power**
- Inbound Power
- Integrated Cabinet Solutions
- Outside Plant
- Precision Cooling
- Site Monitoring and Services

EmersonNetworkPower. com

Emerson Network Power and the Emerson Network Power logo are trademarks and service marks of Emerson Electric Co.
©2005 Emerson Electric Co.