Dual Output Low ESR Cap. Low-Dropout 300mA Linear Regulator

FEATURES

- Up to 300mA Output Current for Each LDO.
- Low Quiescent Current：50μA (V_{OUT1} and V_{OUT2} Enable Mode).
- Low Dropout：200mV at 300mA Load Current and 3.3V Output Voltage.
- High PSRR：70dB at 1kHz.
- Independent Shutdown Controls.
- Current Limit and Thermal Protection.
- Tiny SOT-23-6, DFN 6L-2X2 Package.

APPLICATIONS

- Cellular Phones.
- PDAs.
- Digital Still Cameras.
- Portable Consumer Equipments.

DESCRIPTION

The AIC1952 is a dual output linear regulator in a tiny SOT-23-6, DFN 6L-2X2 package. It is optimized for low ESR ceramic capacitors operation and up to 300mA continuous current on each output.

The AIC1952 offers high precision output voltage of ±2%. At 300mA load current, a 200mV dropout is performed when output voltage is equal to 3.3V. The quality of low quiescent current and low dropout voltage makes this device ideal for battery power applications. The high ripple rejection and low noise of the AIC1952 provide enhanced performances for critical applications such as cellular phones, and PDAs.

The AIC1952 includes current limit and thermal shutdown protection. Each of the output is controlled independently.

TYPICAL APPLICATION CIRCUIT

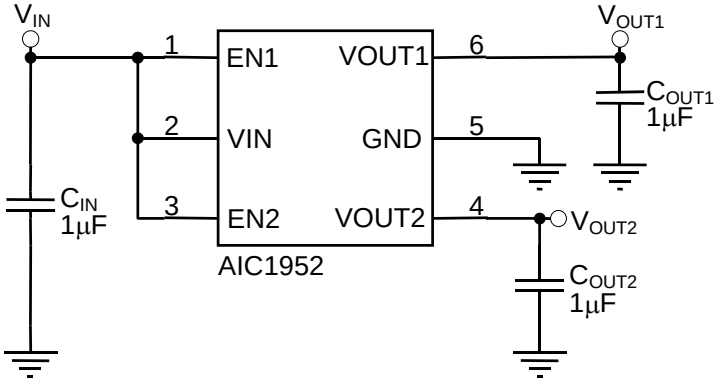

ORDERING INFORMATION

AIC1952-XXXXXXXX

- PACKING TYPE
  TR: TAPE & REEL
  BG: BAG
- PACKAGE TYPE
  G6T: SOT-23-6
  G6A: SOT-23-6
  DA: DFN 6L-2X2
- G: GREEN PACKAGE
- OUTPUT2 VOLTAGE:

	VOUT2
A	0.8V
:	:
:	:
Z	3.3V
3	2.85V
4	3.4V
5	3.5V
6	3.6V
7	3.7V
8	3.8V

- OUTPUT1 VOLTAGE:

	VOUT1
A	0.8V
:	:
:	:
Z	3.3V
3	2.85V
4	3.4V
5	3.5V
6	3.6V
7	3.7V
8	3.8V

(Internally set VOUT1、VOUT2 and PACKAGE TYPE, refer to the "designator xxxxxx" table below. For other combinations, a unit of 0.1V within 0.8~3.8V, additional voltage versions and package type are available on demand.)

Example: AIC1952-KEGG6TTR

→ Vout1 = 1.8V, Vout2 = 1.2V, with G6T type pin configuration in SOT-23-6 Green package and TAPE & REEL packing.

AIC1952-ZKGG6ATR

→ Vout1 = 3.3V, Vout2 = 1.8V, with G6A type pin configuration in SOT-23-6 Green package and TAPE & REEL packing.

PACKAGE TYPE	PIN CONFIGURATION
G6T (SOT-23-6)	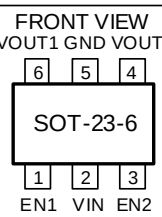
G6A (SOT-23-6)	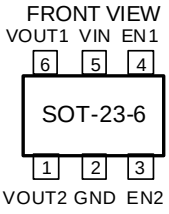
DA (DFN 6L-2x2)	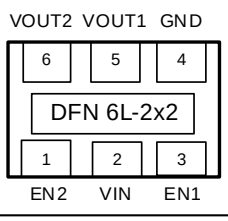

●Designator xxxxxx

Designator	Output Voltage		Designator	Output Voltage	
xxxxxx	VOUT1	VOUT2	xxxxxx	VOUT1	VOUT2
WWGG6T WWGG6A	3.0	3.0	DEGG6T DEGG6A	1.1	1.2
EZGG6T EZGG6A	1.2	3.3	KHGG6T KHGG6A	1.8	1.5
W3GG6T W3GG6A	3.0	2.85	KEGG6T KEGG6A	1.8	1.2
ZKGG6T ZKGG6A	3.3	1.8	ZWGG6T ZWGG6A	3.3	3.0
UHGG6T UHGG6A	2.8	1.5	ZZGG6T ZZGG6A	3.3	3.3
33GG6T 33GG6A	2.85	2.85	KZGG6T KZGG6A	1.8	3.3
KUGG6T KUGG6A	1.8	2.8	UKGG6T UKGG6A	2.8	1.8
HUGG6T HUGG6A	1.5	2.8	ZUGG6T ZUGG6A	3.3	2.8
WRGG6T WRGG6A	3.0	2.5	ERGG6T ERGG6A	1.2	2.5
UZGG6T	2.8	3.3			

●SOT-23-6 Marking

Part No.	Marking	Output Voltage
AIC1952-xxGG6T	GQxxG	1st X -> Vout1, 2nd X -> Vout2 X=A,B,C…Y, Z, 3~8 (A=0.8V, B=0.9V,…Y=3.2V, Z=3.3V, 3=2.85V, 4=3.4V, 5=3.5V,...8=3.8V), 0.1V a step
AIC1952-xxGG6A	GPxxG	1st X -> Vout1, 2nd X -> Vout2 X=A,B,C…Y, Z, 3~8 (A=0.8V, B=0.9V,…Y=3.2V, Z=3.3V, 3=2.85V, 4=3.4V, 5=3.5V,...8=3.8V), 0.1V a step

●DFN 6L-2X2 Marking

Part No.	Marking	Output Voltage
AIC1952-xxGDA	GTxxG	1st X -> Vout1, 2nd X -> Vout2 X=A,B,C…Y, Z, 3~8 (A=0.8V, B=0.9V,…Y=3.2V, Z=3.3V, 3=2.85V, 4=3.4V, 5=3.5V,...8=3.8V), 0.1V a step

ABSOLUTE MAXIMUM RATINGS

Input Voltage 7V

EN Pin Voltage 7V

Operating Ambient Temperature Range T_A ..... -40ºC~85ºC

Operating Maximum Junction Temperature T_J 150ºC

Storage Temperature Range T_{STG} ..... -65ºC~150ºC

Lead Temperature (Soldering 10 Sec.) 260ºC

Thermal Resistance Junction to Case	SOT-23-6	115°C/W
	DFN 6L-2X2*	30°C/W
Thermal Resistance Junction to Ambient	SOT-23-6	250°C/W
	DFN 6L-2X2*	165°C/W

(Assume no ambient airflow)

Absolute Maximum Ratings are those values beyond which the life of a device may be impaired.

*The package is place on a two layers PCB with 2 ounces copper and 2 square inch, connected by 8 vias.

■ ELECTRICAL CHARACTERISTICS

(V_{IN} = V_{OUT} + 1V, V_{EN1}=V_{EN2}= V_{IN}, T_J=25°C, unless otherwise specified) (Note 1)

PARAMETER	TEST CONDITIONS		SYMBOL	MIN.	TYP.	MAX.	UNIT
Input Voltage (Note 2)			V_{IN}	1.6		6.0	V
Output Voltage Tolerance	V_{IN}= 6V, I_{OUT} = 1mA		V_{OUT}	-2		2	%
Continuous Output Current			I_{OUT}	300			mA
Quiescent Current	V_{EN2} = V_{EN1} = V_{IN}		I_Q		50	80	μA
GND Pin Current	I_{OUT1} = 300mA & I_{OUT2} = 300mA, V_{EN2} = V_{EN1} = V_{IN}		I_{GND}		55	80	μA
Standby Current	V_{EN1}=V_{EN2}= 0		I_{STBY}			0.1	μA
Output Current Limit	V_{IN}= 5V, V_{OUT} = GND		I_{IL}	340	500	720	mA
Dropout Voltage	I_{OUT} = 300mA	V_{OUT}=1.2V	V_{DROP}		640	700	mV
		V_{OUT}=1.8V			380	440	
		V_{OUT}=2.5V			270	330	
		V_{OUT}=3.3V			200	250	
Line Regulation	V_{IN} = V_{OUT} + 1V to 6V		ΔV_{LIR}		3	16	mV
Load Regulation	I_{OUT} = 1mA to 300mA		ΔV_{LOR}		2	10	mV
Ripple Rejection	f=1kHz, Ripple=0.5Vp-p,		PSRR		70		dB
Output Noise Voltage	f= 10~100KHz				24		μVrms
Temperature Coefficient			TC		50		ppm/℃
Thermal Shutdown Temperature	V_{IN} = V_{OUT} + 1V				150		℃
Thermal Shutdown Hysteresis					35		℃
EN Pin SPECIFICATIONS							
EN Pin Current	V_{EN1} = V_{EN2} = V_{IN}		I_{EN}			0.1	μA
Shutdown Exit Delay Time			Δt		100		μS
Max Output Discharge Resistance to GND during shutdown			RDSON_CLMP		20		Ω
EN Input Threshold	Output ON		V_{ENH}	1.6			V
	Output OFF		V_{ENL}			0.25	

Note 1: Specifications are production tested at T_A=25°C. Specifications over the -40°C to 85°C operating temperature range are assured by design, characterization and correlation with Statistical Quality Controls (SQC).

Note 2: V_{IN}(min) is the higher value of Vout + Dropout Voltage or 1.6V.

TYPICAL PERFORMANCE CHARACTERISTICS

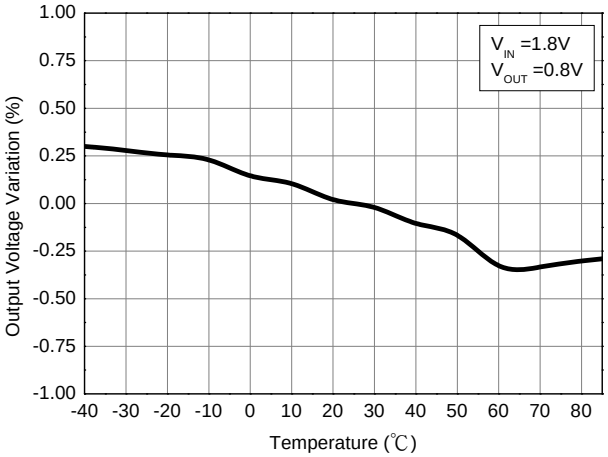

Fig.1 Output Voltage Variation vs. Temperature

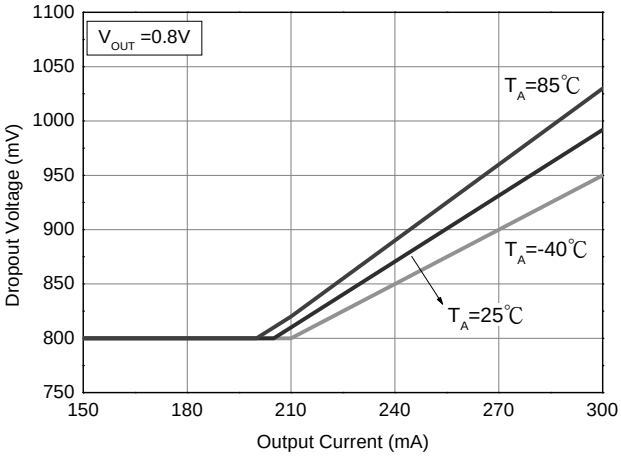

Fig.2 Dropout Voltage vs. Output Current

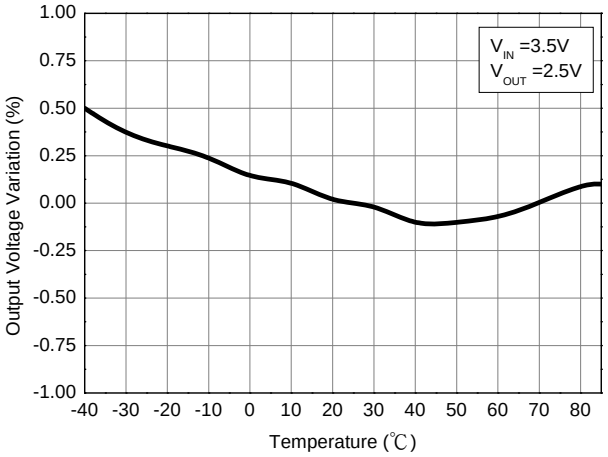

Fig.3 Output Voltage Variation vs. Temperature

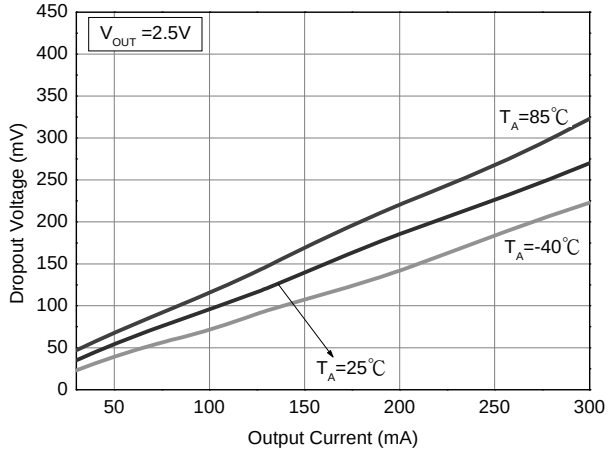

Fig.4 Dropout Voltage vs. Output Current

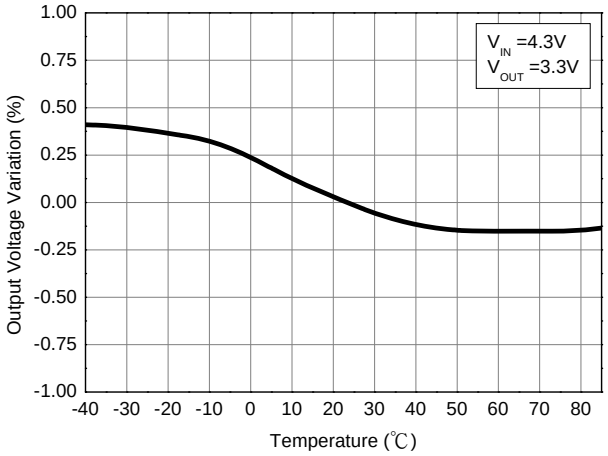

Fig.5 Output Voltage Variation vs. Temperature

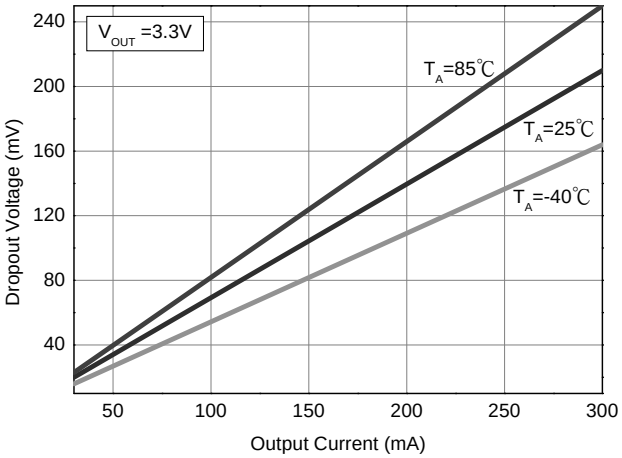

Fig.6 Dropout Voltage vs. Output Current

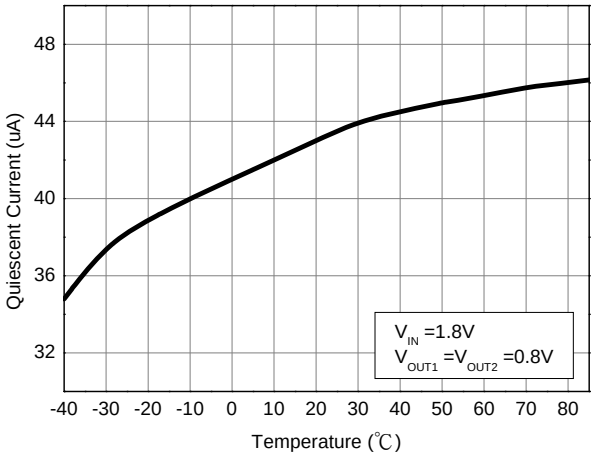

Fig.7 Dual LDO Quiescent Current vs. Temperature

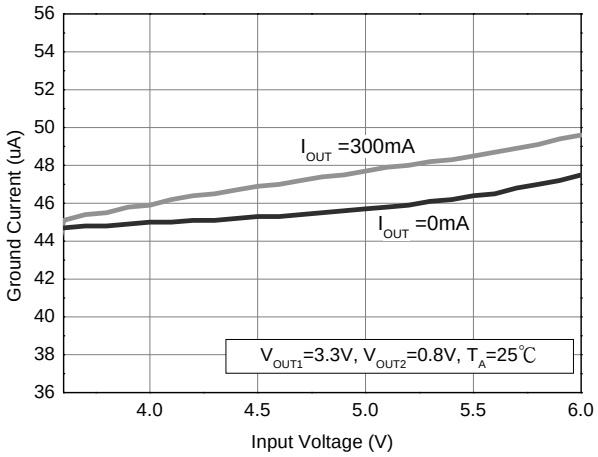

Fig.8 Dual LDO Quiescent Current and Ground Current vs. Input Voltage

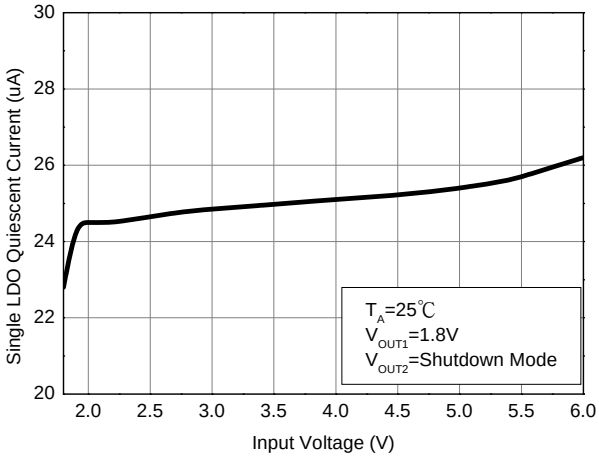

Fig.9 Single LDO Quiescent Current vs. Input Voltage

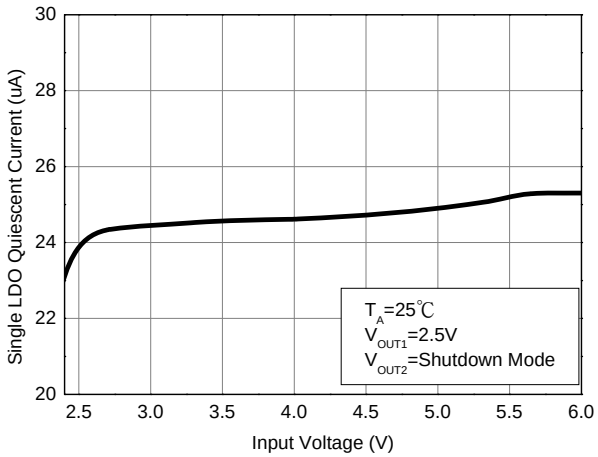

Fig.10 Single LDO Quiescent Current vs. Input Voltage

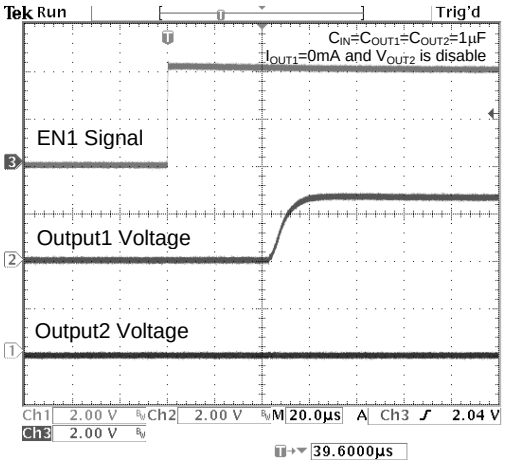

Fig.11 Start Up Waveform at V_{IN}=3.8V, V_{OUT1}=2.8V and V_{OUT2}=1.8V

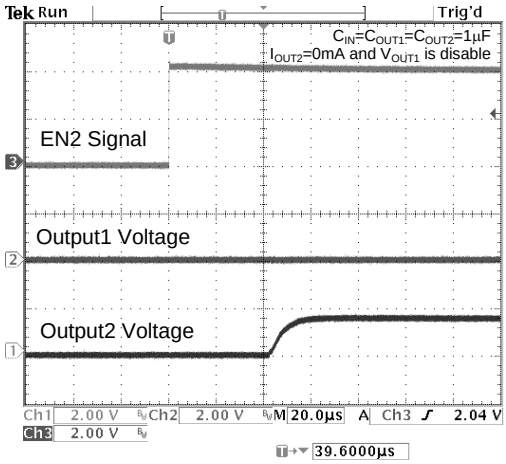

Fig.12 Start Up Waveform at V_{IN}=3.8V, V_{OUT1}=2.8V and V_{OUT2}=1.8 V

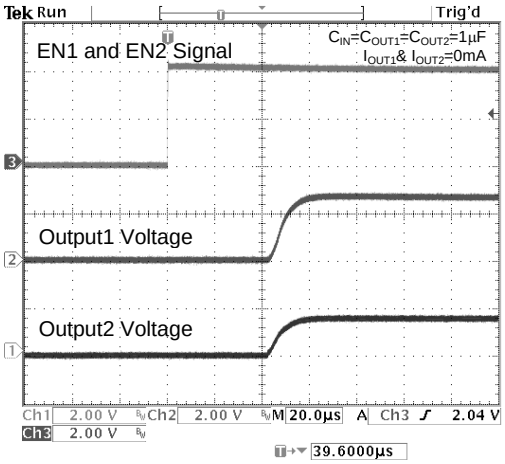

Fig.13 Start Up Waveform at V_{IN}=3.8V, V_{OUT1}=2.8V and V_{OUT2}=1.8V

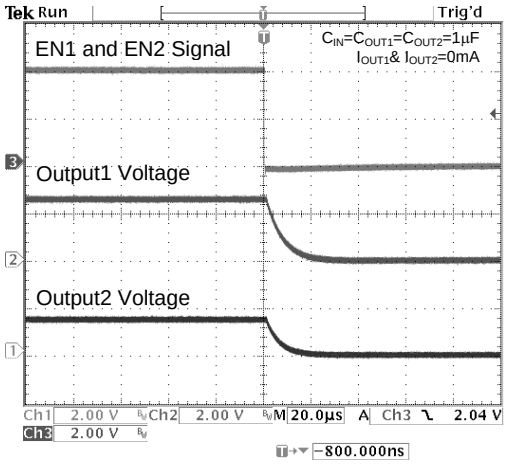

Fig.14 Shutdown Waveform at V_{IN}=3.8V, V_{OUT1}=2.8V and V_{OUT2}=1.8V

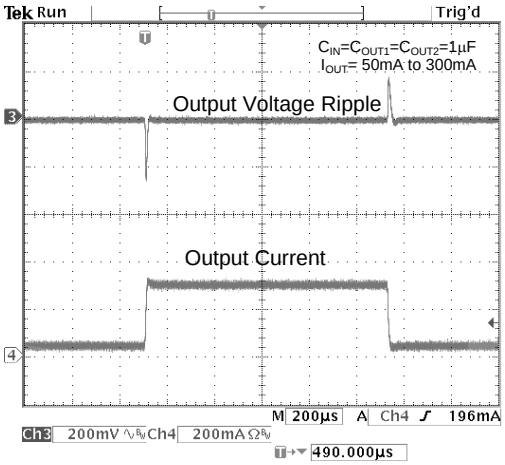

Fig.15 Load Transient Response at V_{IN}=2.8V, V_{OUT}=1.8V

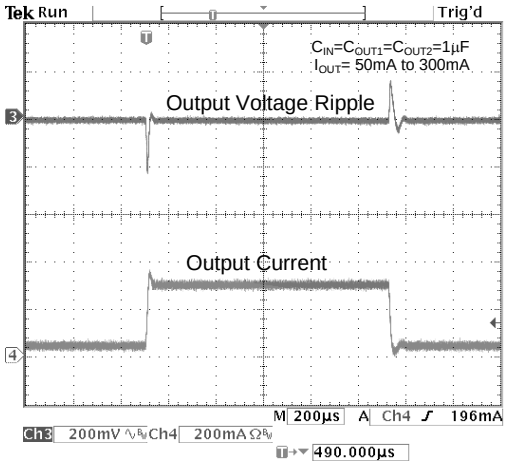

Fig.16 Load Transient Response at V_{IN}=3.5V, V_{OUT}=2.5V

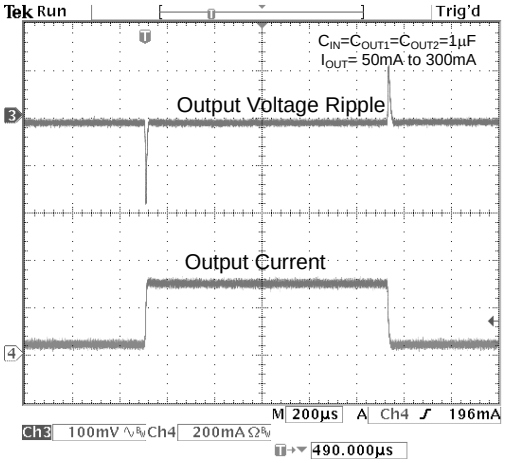

Fig.17 Load Transient Response at V_{IN}=2.5V, V_{OUT}=1.5V

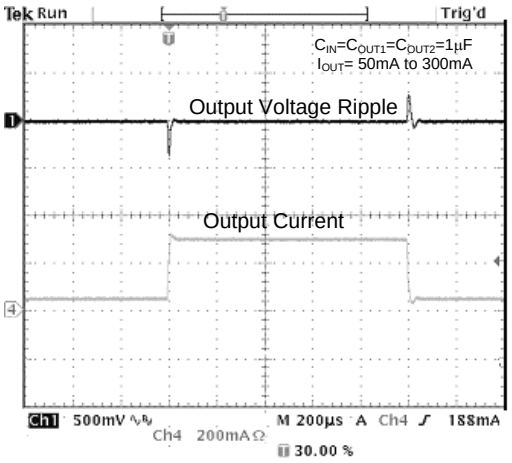

Fig.18 Load Transient Response at V_{IN}=4.3V, V_{OUT}=3.3V

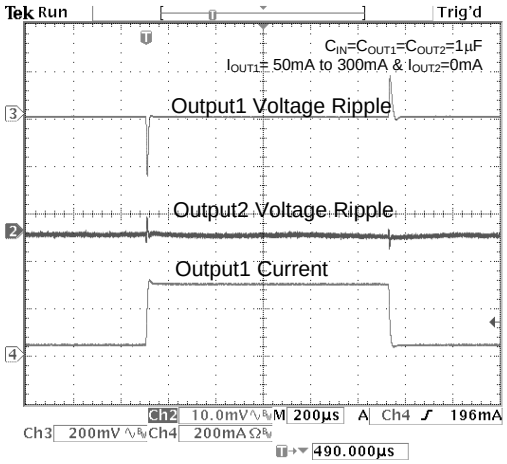

Fig.19 Cross Talk at V_{IN}=3.8V, V_{OUT1}=1.8V and V_{OUT2}=2.8V

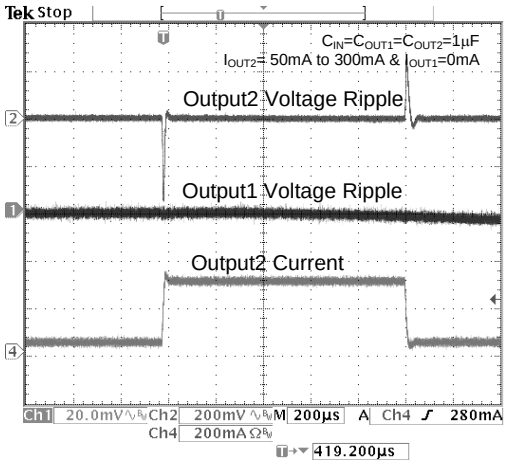

Fig.20 Cross Talk at V_{IN}=3.8V, V_{OUT1}=1.8V and V_{OUT2}=2.8V

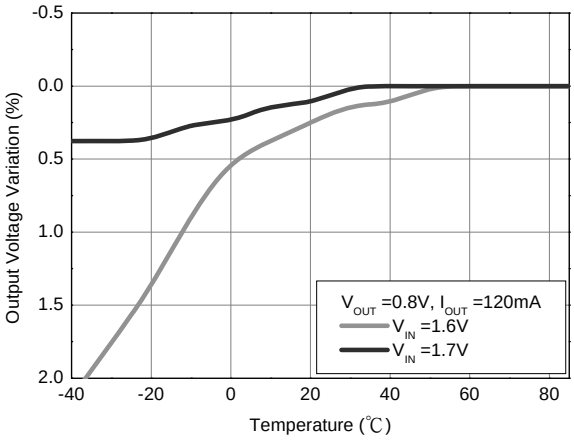

Fig.21 Output Voltage Variation vs. Temperature.

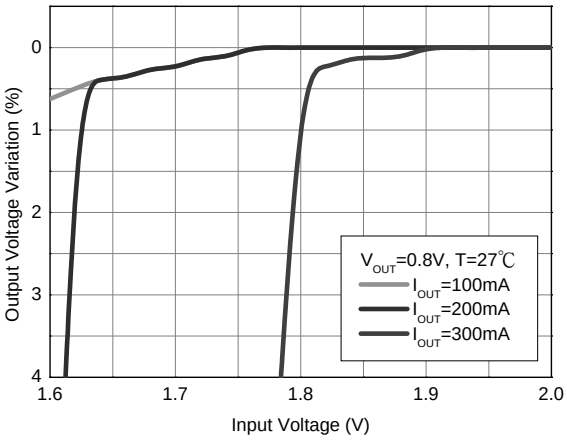

Fig.22 Output Voltage vs. Input Voltage.

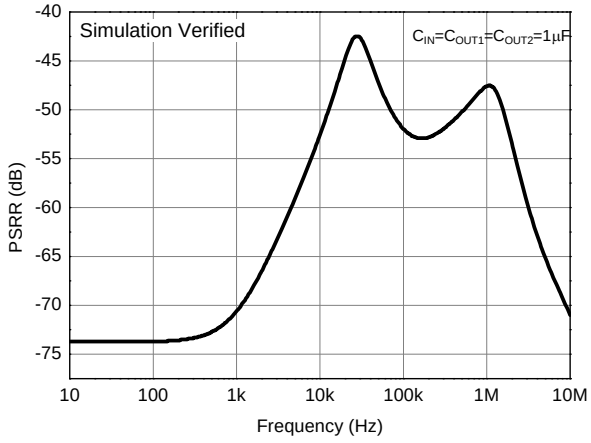

Fig.23 PSRR at V_{IN}=2.5V, V_{OUT}=1.0V and I_{OUT}=10mA.

BLOCK DIAGRAM

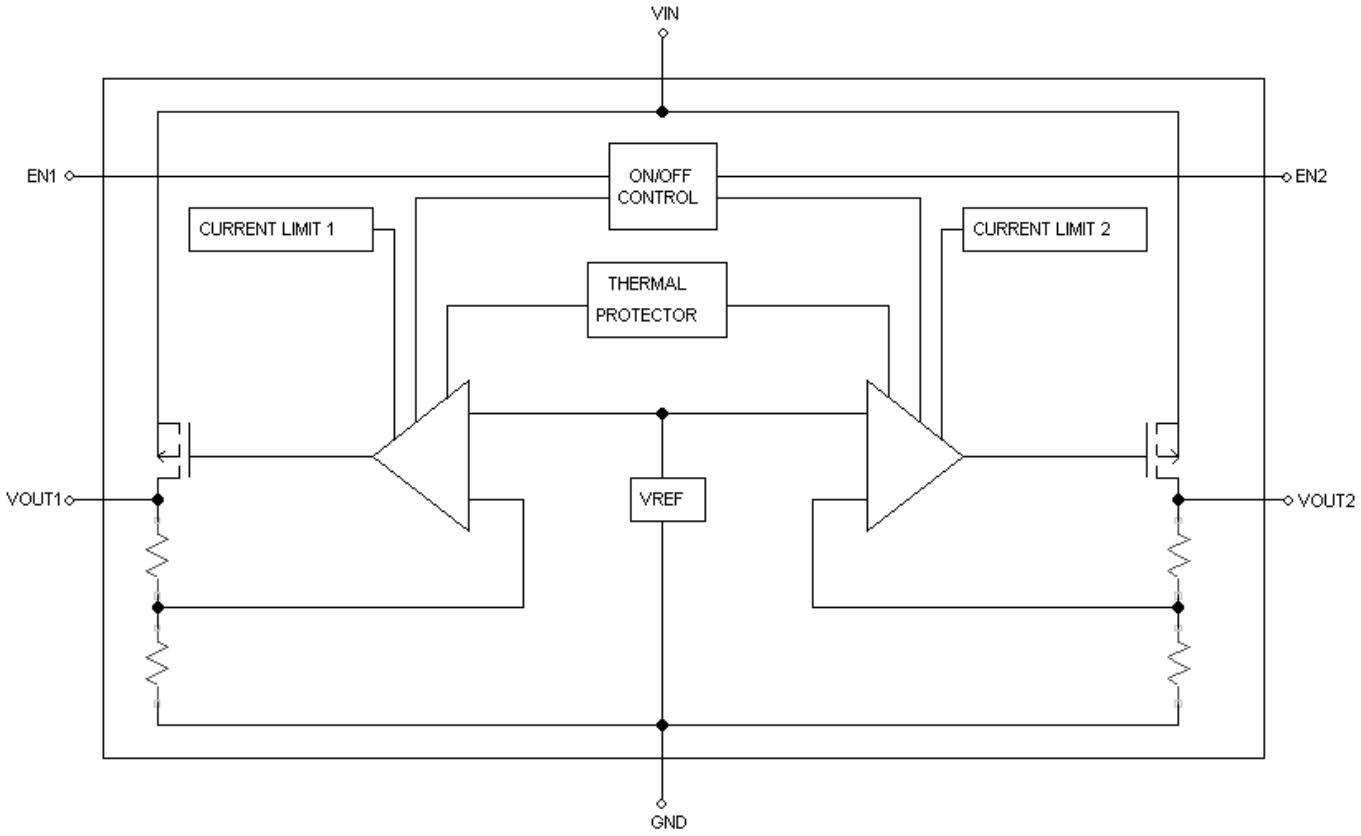

PIN DESCRIPTION

VIN PIN - Power input.
GND PIN - Ground.
EN1 PIN - Output 1 ON/OFF controller. This pin isn't allowed to float.
EN2 PIN - Output 2 ON/OFF controller. This pin isn't allowed to float.
VOUT1 PIN - Output 1.
VOUT2 PIN - Output 2.

APPLICATION INFORMATION

The AIC1952 is a low-dropout, low quiescent-current, dual-output linear regulator for battery power applications. These parts are available with preset output voltages ranging from 0.8V to 3.8V, and the parts can supply loads up to 300mA.

SHUTDOWN

The AIC1952 has two independent shutdown control inputs (EN1 and EN2). By connecting EN1 pin to ground, output1 can be shut down. By connecting EN2 pin to ground, output2 can be shut down. By connecting both of EN1 pin and EN2 pin to ground, the AIC1952 can be shut down to reduce the supply current to 0.1μA.

CURRENT LIMIT

The AIC1952 includes two independent current limiters, which monitor and control the maximum output current. If the output is overloaded or shorted to ground, this can protect the device from being damaged.

THERMAL PROTECTION

The AIC1952 includes a thermal-limiting circuit, which is designed to protect the device against overload condition. When the junction temperature exceeds T_J=150ºC, the thermal-limiting circuit turns off the pass transistors and allows the IC to cool. For continuous load condition, maximum rating of junction temperature must not be exceeded.

INPUT-OUTPUT CAPACITORS

Linear regulators require input and output capacitors to maintain stability. Input capacitor at 1μF with a 1μF ceramic output capacitor for each regulator is recommended. When choosing the input and output ceramic capacitors, X5R and X7R types are recommended because they retain their capacitance over wider ranges of voltage and temperature than other types.

POWER DISSIPATION

The maximum power dissipation of AIC1952 depends on the thermal resistance of its case and circuit board, the temperature difference between the die junction and ambient air, and the rate of airflow. The rate of temperature rise is greatly affected by the mounting pad configuration on the PCB, the board material, and the ambient temperature. When the IC mounting with good thermal conductivity is used, the junction temperature will be low even when large power dissipation applies.

The power dissipation across the device is

$P = I_{OUT1} (V_{IN}-V_{OUT1})+ I_{OUT2} (V_{IN}-V_{OUT2})$

The maximum power dissipation is:

$$P_{MAX} = \frac{(T_{J\text{-}max} - T_A)}{R\theta_{JA}}$$

Where $T_{J\text{-}max}$ is the maximum allowable junction temperature (150°C), and T_A is the ambient temperature suitable in application.

As a general rule, the lower temperature is, the better reliability of the device is. So the PCB mounting pad should provide maximum thermal conductivity to maintain low device temperature.

PHYSICAL DIMENSIONS

- **SOT-23-6 PACKAGE OUTLINE DRAWING**

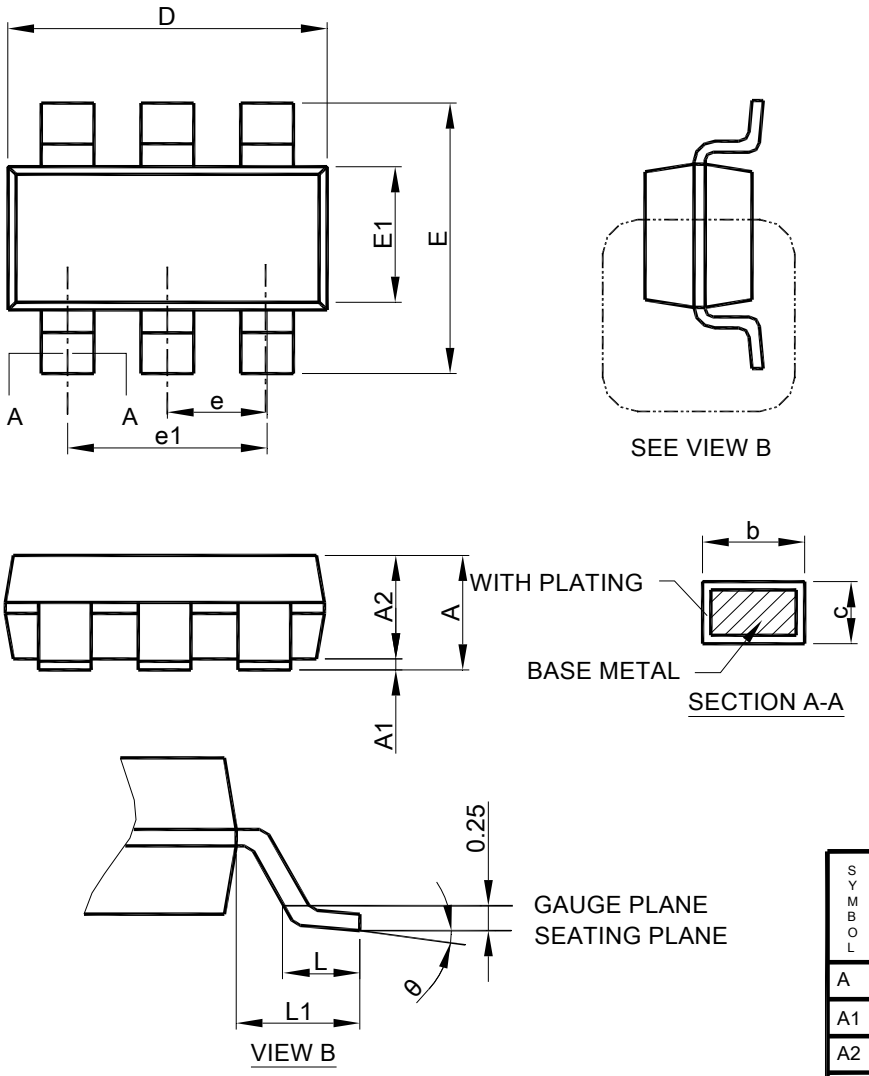

SYMBOL	SOT-23-6	
	MILLIMETERS	
	MIN.	MAX.
A	0.95	1.45
A1	0.00	0.15
A2	0.90	1.30
b	0.30	0.50
c	0.08	0.22
D	2.80	3.00
E	2.60	3.00
E1	1.50	1.70
e	0.95 BSC	
e1	1.90 BSC	
L	0.30	0.60
L1	0.60 REF	
θ	0°	8°

Note : 1. Refer to JEDEC MO-178AB.
2. Dimension "D" does not include mold flash, protrusions or gate burrs. Mold flash, protrusion or gate burrs shall not exceed 10 mil per side.
3. Dimension "E1" does not include inter-lead flash or protrusions.
4. Controlling dimension is millimeter, converted inch dimensions are not necessarily exact.

- **DFN 6L-2X2 PACKAGE OUTLINE DRAWING**

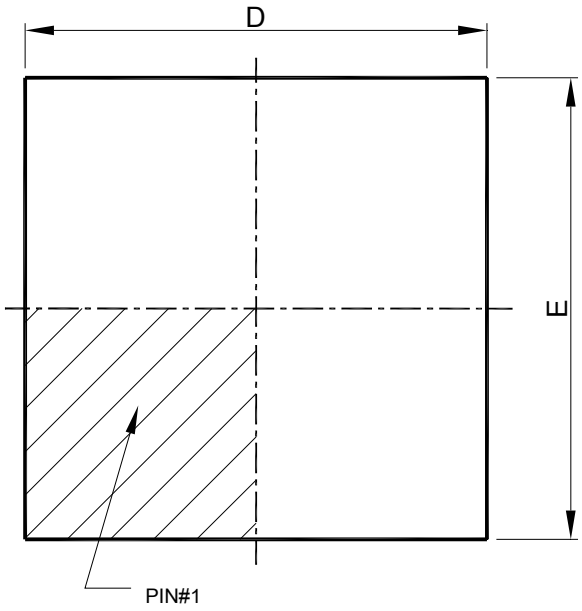

TOP VIEW

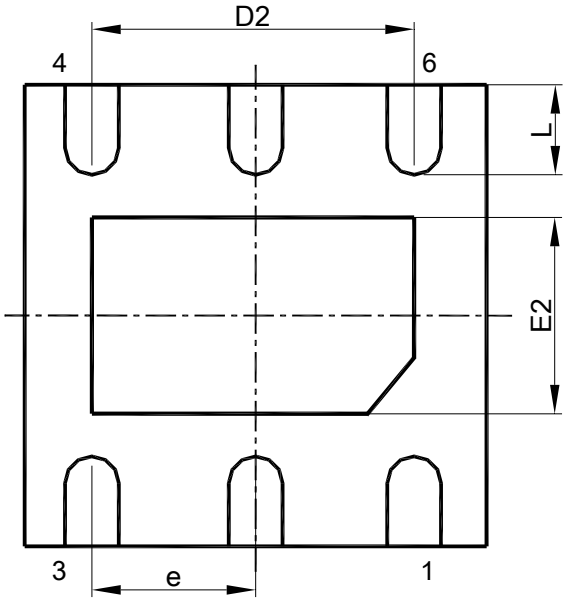

BOTTOM VIEW

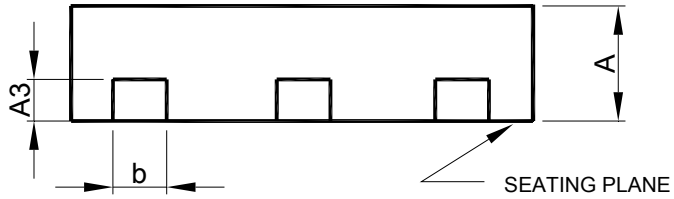

SIDE VIEW

SYMBOL	DFN 6L-2x2x0.75-0.65mm	
	MILLIMETERS	
	MIN.	MAX.
A	0.70	0.80
A3	0.20 BSC	
b	0.20	0.35
D	2.00 BSC	
D2	1.10	1.60
E	2.00 BSC	
E2	0.55	0.85
e	0.65 BSC	
L	0.25	0.45

Note : 1. DIMENSION AND TOLERANCING CONFORM TO ASME Y14.5M-1994.
2.CONTROLLING DIMENSIONS：MILLIMETER，CONVERTED INCH DIMENSION ARE NOT NECESSARILY EXACT.
3.DIMENSION b APPLIES TO METALLIZED TERMINAL AND IS MEASURED BETWEEN 0.10 AND 0.25 mm FROM TERMINAL TIP.

Note:
Information provided by AIC is believed to be accurate and reliable. However, we cannot assume responsibility for use of any circuitry other than circuitry entirely embodied in an AIC product; nor for any infringement of patents or other rights of third parties that may result from its use. We reserve the right to change the circuitry and specifications without notice.
Life Support Policy: AIC does not authorize any AIC product for use in life support devices and/or systems. Life support devices or systems are devices or systems which, (I) are intended for surgical implant into the body or (ii) support or sustain life, and whose failure to perform, when properly used in accordance with instructions for use provided in the labeling, can be reasonably expected to result in a significant injury to the user.