High-Efficiency, Bootstrapped DC/DC Converter

FEATURES

- 3V to 20V Input Voltage Operation.
- Internal 800mA Switch.
- Bootstrapped Driver for N-Channel MOSFET.
- High Efficiency (up to 90%).
- Fast Transient Response.
- Internal ±2% Reference.
- Low Quiescent Current at 1.6mA.
- Frequency Operation from 200Hz to 200KHz.

APPLICATIONS

- CPU Power Supplies for Mother Boards.
- DC/DC Converters for CPU VRMs.
- Step-Down DC-DC Converter Module.

DESCRIPTION

The AIC1562 is a high performance monolithic DC/DC converter drive IC with output-bootstrapping capability, designed specifically for driving N-channel MOSFET to achieve maximum possible power conversion efficiency. The device consists of an internal temperature compensated reference, comparator, controlled duty cycle oscillator, bootstrapped driver and a 800mA output switch. Working with the AIC1741, a low power adjustable regulator, the AIC1562 works at 100% duty cycle under heavy load transient conditions to minimize transient response time, making it an idea precision switching power solution to stringent requirements on computer mother boards.

TYPICAL APPLICATION CIRCUIT

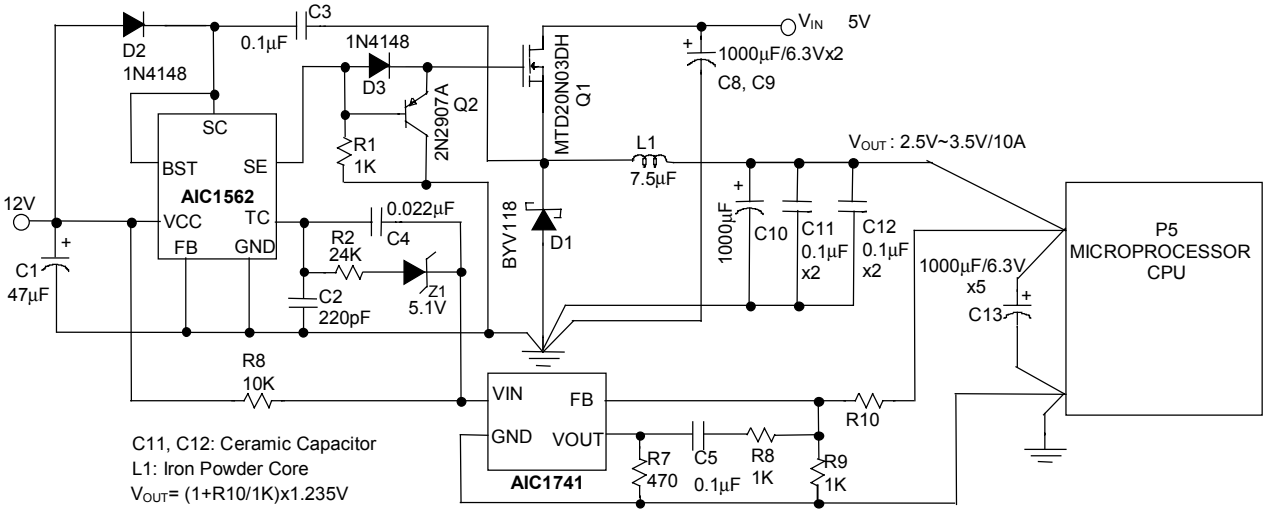

CPU Power Supply for P5 Mother Board

ORDERING INFORMATION

AIC1562 XX

- PACKAGE TYPE
  N: PLASTIC DIP
  S: SMALL OUTLINE
- TEMPERATURE
  C: 0°C~+70°C

ORDER NUMBER	PIN CONFIGURATION
AIC1562CN (PLASTIC DIP)	TOP VIEW 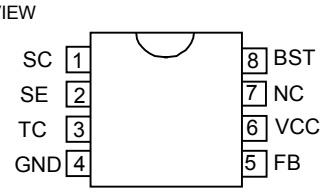
AIC1562CS (PLASTIC SO)	

ABSOLUTE MAXIMUM RATINGS

Supply Voltage 20V
Comparator Input Voltage Range ..... -0.3V~20V
Switch Collector Voltage 20V
Switch Emitter Voltage 20V
Switch Collector to Emitter Voltage 20V
Driver Collector Voltage 20V
Switch Current 1A
Power Dissipation and Thermal Characteristics

DIP Package

Ta= 25°C 1.0W
Thermal Resistance ..... 100°C/W

SO Package

Ta= 25°C 625mW
Thermal Resistance ..... 160°C/W

Operating Junction Temperature ..... 125°C
Operating Ambient Temperature Range ..... 0°C~70°C
Storage Temperature Range..... - 65°C ~ 150°C

TEST CIRCUIT

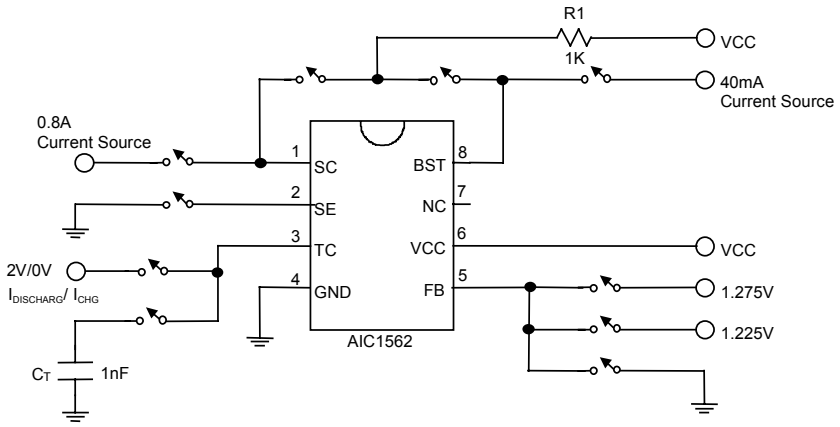
R1
1K
VCC
40mA
Current Source
0.8A
Current Source
1
SC
BST
8
2
SE
NC
7
3
TC
VCC
6
VCC
2V/0V
$I_{DISCHARG}$/ I_{CHG}
4
GND
FB
5
1.275V
1.225V
AIC1562
C_T
1nF

ELECTRICAL CHARACTERISTICS (VCC= 5V, Ta=25°C unless otherwise specified.)

PARAMETER	TEST CONDITIONS	SYMBOL	MIN.	TYP.	MAX.	UNIT
Oscillator						
Charging Current	5.0V≤VCC≤20V	I_{CHG}	15	25	35	A
Discharge Current	5.0≤VCC≤20V	I_{DISCHG}	120	150	180	μA
Voltage Swing	PIN 3	V_{OSC}		0.6		V
Discharge to Charge Current Ratio	V_{IS} =VCC	I_{DISCHG} / I_{CHG}		6.0		
Output Switch						
Saturation Voltage, Emitter Follower Connection	I_{SE}=0.8A; V_{BST} =V_{SC} = VCC	$V_{CE(SAT)}$		1.6	2.0	V
Saturation Voltage	I_{SC}=0.8A; I_{BST} =40mA, (Forced ≅20)	$V_{CE\ (SAT)}$		0.5	0.8	V
DC Current Gain	I_{SC} =0.8A; V_{CE}=5.0V	h_{FE}	35	120		
Collector Off-State Current	V_{CE}=20V	$I_{C(OFF)}$		10		nA
Comparactor						
Threshold Voltage	Ta=25°C 0°C ≤Ta ≤70°C	V_{FB}	1.225 1.21	1.25	1.275 1.29	V V
Threshold Voltage Line Regulation	3.0V ≤VCC≤20V	REG_{LINE}		0.1	0.5	mV/V
Input Bias Current	V_{IN}=0V	I_{IB}		0.4	2	μA
Supply current	V_{IS} =VCC, pin 5>V_{FB} 5.0V ≤VCC≤20V C_T=1nF PIN 2=GND Remaining pins open	I_{CC}		1.6	3	mA

TYPICAL PERFORMANCE CHARACTERISTICS

Output Switch ON-OFF Time vs. Oscillator Timing Capacitor

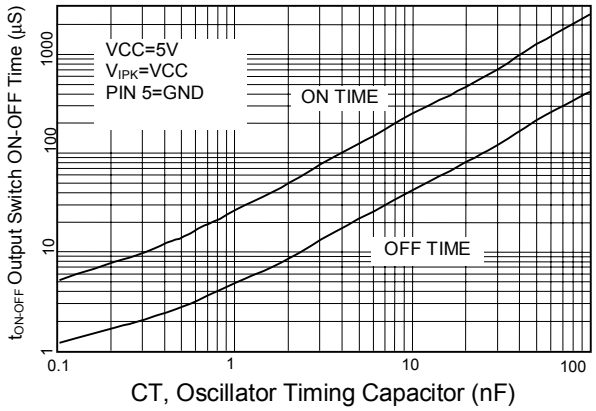

Standby Supply Current vs. Supply Voltage

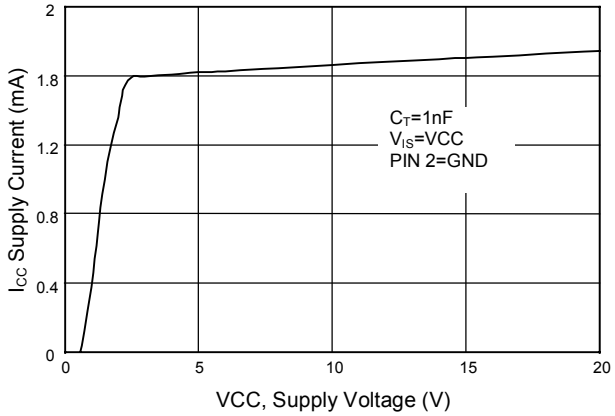

V_{FB}, Threshold Voltage vs Temperature

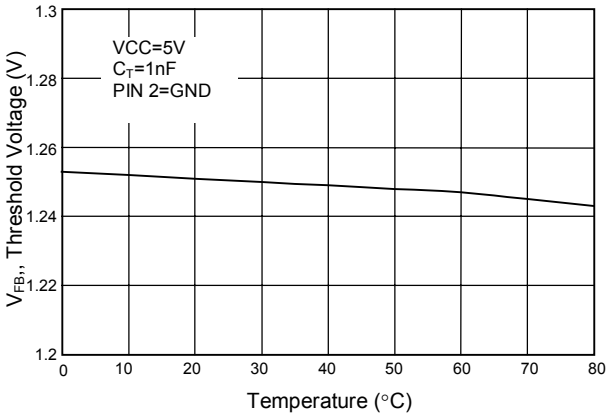

Emitter Follower Configuration Output Switch Saturation Voltage vs. Emitter Current

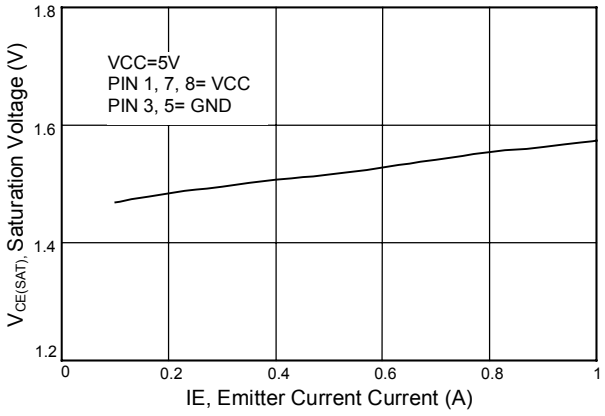

Common Emitter Configuration Output Switch Saturation Voltage vs. Collector Current

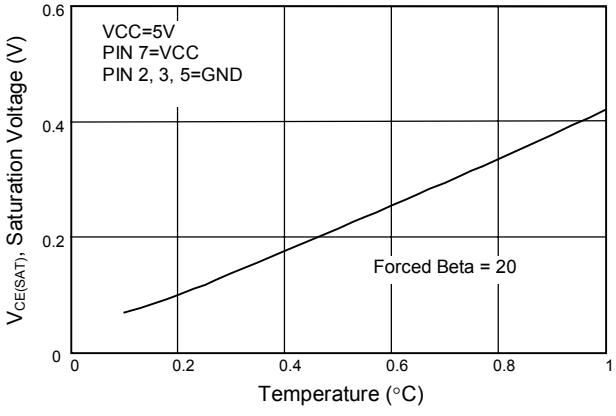

BLOCK DIAGRAM

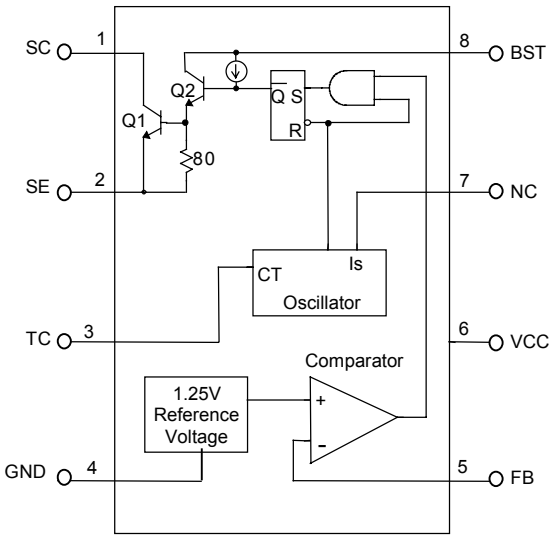

PIN DESCRIPTIONS

PIN 1: SC - 0.8A switch collector.

PIN 2: SE - Darlington switch emitter.

PIN 3: TC - Oscillator timing capacitor.

PIN 4: GND - Power ground.

PIN 5: FB - Feedback comparator inverting input.

PIN 6: VCC - Power supply input.

PIN 7: NC -

PIN 8: BST - Bootstrapped driver collector.

PHYSICAL DIMENSIONS

- **8 LEAD PLASTIC SO (unit: mm)**

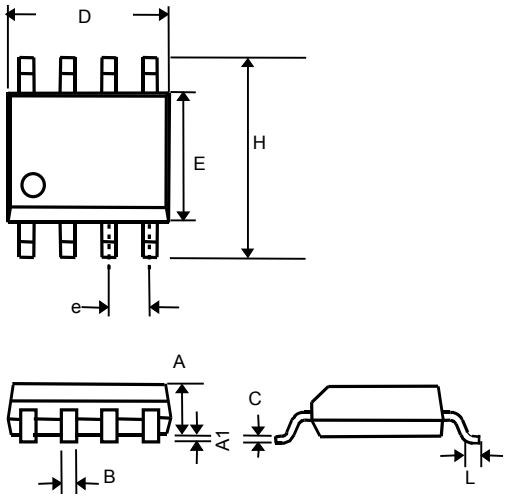

SYMBOL	MIN	MAX
A	1.35	1.75
A1	0.10	0.25
B	0.33	0.51
C	0.19	0.25
D	4.80	5.00
E	3.80	4.00
e	1.27(TYP)	
H	5.80	6.20
L	0.40	1.27

- **8 LEAD PLASTIC DIP (unit: mm)**

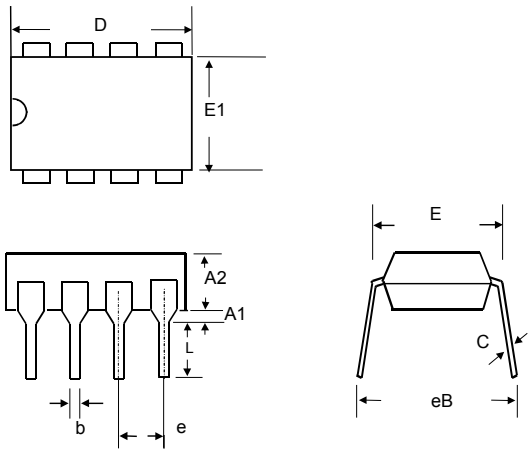

SYMBOL	MIN	MAX
A1	0.381	—
A2	2.92	4.96
b	0.35	0.56
C	0.20	0.36
D	9.01	10.16
E	7.62	8.26
E1	6.09	7.12
e	2.54 (TYP)	
eB	—	10.92
L	2.92	3.81