AIC™-7892

Single-Channel PCI-to-Ultra160 SCSI Single-Chip Host Adapter



Product Benefits

- **Up to 160 MByte/sec data transfer rates**
- **66 MHz, 64-bit, PCI interface that supports zero wait-state memory; also operates on 33 MHz, 32-bit PCI busses**
- **PC99 compliant**
- **PCI 2.2 compliant**
- **Supports up to 15 devices on a standard cable configuration up to 12 meters**
- **Fully compatible with the AIC-3860 LVD-to-single-ended transceiver**

Overview

The Adaptec® AIC-7892 single-chip host adapter provides outstanding performance and flexibility to meet tomorrow's requirements today. Ultra160 SCSI delivers data transfer rates up to 160 MByte/sec to address emerging bandwidth-hungry applications, such as real-time video, data mining, Internet/Intranet, and scientific modeling and simulation. The AIC-7892 chip features a 66 MHz, 64-bit, PCI interface for next-generation server, workstation, and high-end desktop systems.

Migration to new Ultra160 SCSI technology is easy with the AIC-7892. The chip is fully backward compatible with Ultra2 and earlier SCSI generations. The chip is available in a 272 Ball Grid Array (BGA) package.

Key Benefits

Increased SCSI Performance

With the AIC-7892, performance takes a giant leap forward. Ultra160 SCSI technology doubles Ultra2 data transfer rates – up to 160 MByte/sec. In addition, the AIC-7892 single-chip host adapter features a PCI bus interface that supports zero wait-state memory from 32-bit, 33 MHz to 64-bit, 66 MHz. The 64-bit, 66-MHz interface quadruples the bandwidth provided by a 32-bit, 33 MHz PCI interface, from 133 MByte/sec to 533 MByte/sec, enabling maximum system throughput.

Improved Data Integrity

The AIC-7892 fully supports Ultra160 Cyclic Redundancy Checking (CRC). CRC detects data integrity errors that would not be detected by simple parity checking used by previous SCSI generations. The higher 160 MByte/sec data rate achieved on existing Low Voltage Differential (LVD) cable configurations mandated this improved data integrity feature.

SCSI Bus Configuration Testing

The AIC-7892 fully supports Ultra160 and Ultra3 SCSI Domain Validation. Domain Validation provides SCSI bus configuration testing to help ensure Ultra160 SCSI devices operate at optimum speed.

Long Cables

The AIC-7892 supports a maximum of 15 LVD devices on 12 meters of cable. In a point-to-point configuration, the maximum cable length extends to 25 meters. The AIC-7892 is fully compatible with existing Ultra2 SCSI supported cable configurations. The cable-length distances provide greater system configuration flexibility – especially for clustering and RAID applications. The AIC-7892 also supports High Voltage Differential (HVD) busses when used with external HVD transceivers.

Backward Compatibility

The AIC-7892 incorporates an advanced multimode I/O cell that supports Ultra2, Ultra3, and Ultra160 SCSI LVD devices, as well as single-ended (SE) devices. With only Ultra2 and Ultra160 devices attached, the SCSI bus performs at full speed and full LVD cable lengths. When SE devices are attached, the bus defaults to SE speed and cable length.

In mixed environments of LVD and single-ended devices, the AIC-7892 host adapter chip can couple with an Adaptec AIC-3860 transceiver chip to bridge the signaling discontinuity. By dividing the SCSI bus into independent single-ended and LVD segments, the AIC-3860 supports legacy devices without limiting performance or LVD segment cable length. (see figure)

Ultra160 SCSI uses the same connectors and cables as Ultra2 and Ultra Wide SCSI, so upgrading system performance is easy and cost-effective.

Adaptec, Inc.
691 South Milpitas Boulevard
Milpitas, California 95035
Tel: (408) 945-8600
Fax: (408) 262-2533

Adaptec Europe - Belgium
Tel: (32) 2-352-34-11
Fax: (32) 2-352-34-00

Adaptec Japan - Tokyo
Tel: (81) 3-5365-6700
Fax: (81) 3-5365-6950

Adaptec Singapore
Tel: (65) 245-7477
Fax: (65) 245-7487

Literature:
1-800-934-2766 (USA and Canada)
or (408) 957-7274

Pre-Sales Support:
1-800-442-7274 (USA and Canada)
or (408) 957-7274

World Wide Web:
http://www.adaptec.com
Internet ftp server: ftp.adaptec.com

Adaptec USA Bulletin Board
Service (BBS): (408) 945-7727
(up to 28,800 baud, using 8 bits,
1 stop bit, no parity)

Interactive Fax: (303) 684-3400

We move the information that *moves* your world.©

Copyright 1999 Adaptec, Inc. All rights reserved. Adaptec, the Adaptec logo, the Adaptec tagline, PhaseEngine, and AIC are trademarks of Adaptec, Inc., which may be registered in some jurisdictions. Microsoft, Windows, Windows NT, Windows 95, and Windows 98 are trademarks of Microsoft Corporation, used under license. All other trademarks used are owned by their respective owners.

Information supplied by Adaptec, Inc., is believed to be accurate and reliable at the time of printing, but Adaptec, Inc., assumes no responsibility for any errors that may appear in this document. Adaptec, Inc., reserves the right, without notice, to make changes in product design or specification. Information is subject to change without notice.

P/N 985733-011 8/99 Printed in U.S.A.

AIC-7892

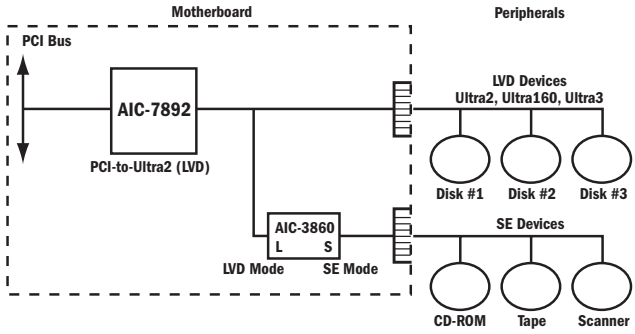

Optimizing performance in a mixed Ultra2, Ultra160, Ultra3, and single-ended peripheral configuration

Performance

- 64-bit, 66 MHz PCI interface supports zero wait-state memory – also operates on PCI busses down to 32-bit, 33 MHz
- Up to 160 MByte/sec on the Ultra160 SCSI bus
- 20-MIPS PhaseEngine® RISC processor for fast SCSI command processing
- 1024-byte data FIFO buffer for efficient PCI bus utilization
- Cache line-streaming for improved PCI bus utilization
- Dual Address Cycle (DAC) provides greater system memory addressibility
- Target mode to support clustering, bridge, and RAID applications
- Tagged command queuing enables changing SCSI command execution order to improve performance

Additional Features

- Advanced multimode Ultra160 SCSI I/O cell for supporting Low Voltage Differential (LVD) or single-ended devices
- Ultra160 and Ultra3 SCSI Domain Validation and CRC support
- JTAG boundary scan to support system-level interconnect testing
- 3.3V/5V PCI interface for providing flexibility in designing high-performance, low-power systems
- Enhanced Logical Unit Number (LUN) supports up to a maximum of 32 LUNs
- Microsoft PC99 compatible
- PCI Hot-Plug compatible
- Fully compatible with the AIC-3860 SCSI transceiver chip

Software Support

- Microsoft® Windows NT®, Windows® 95 and 98, Novell NetWare, SCO Openserver, SCO UnixWare, IBM OS/2, Sun Solaris, and Linux

SCSI Device Support

- Connection for up to 15 devices
- Support for a combination of 16-bit Ultra160, Ultra3, Ultra2, Ultra, and standard SCSI devices, including disk drives, disk arrays, tape drives, CD-ROM and CD-R drives, jukeboxes, removable drives, scanners, and printers
- Slower Ultra SCSI legacy devices can be connected to Adaptec's AIC-3860 LVD-to-single-ended SCSI transceivers for optimal SCSI bus performance

Ultra 160 SCSI