Amphenol SINESYSTEMS

AHD Series™ Connectors

CONFIGURATION	PART NUMBER	LENGTH
PLUG, 9 POS, COUPLING	AHD16-9-96S	TBD

DIMENSIONS

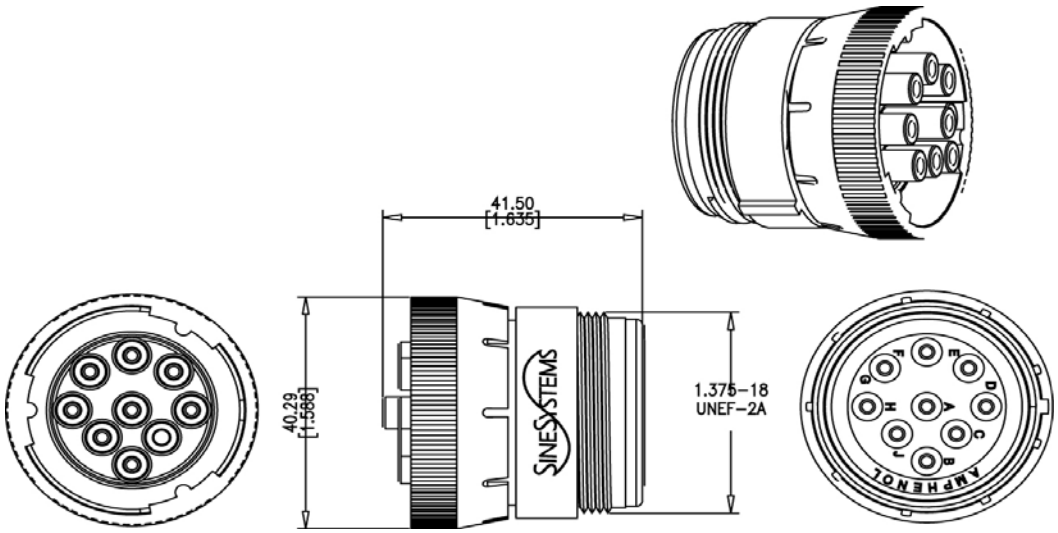

TECHNICAL DATA

PHYSICAL SHOCK:	**Military Style:** No locking, unmating or other unsatisfactory results after 50g's in each of three mutually perpendicular planes.
DIELECTRICAL STRENGTH:	**Diagnostic Grade / Military Style:** 1500 volts minimum
VIBRATION:	**Military Style**: Maintains continuity and exhibits no mechanical or physical damage after vibration. (20 g's at 10-2000Hz)
TEMPERATURE:	**Diagnostic Grade / Military Style:** Operating temperature range: -55C TO +125C at rated current.
INSULATION RESISTANCE:	**Diagnostic Grade / Military Style:** 1000 megohms minimum at 25C
DURABILITY:	**Diagnostics Grade / Military Style:** No electric or mechanical defects after 100 cycles of engagement and disengagement.
CORROSION RESISTANCE:	**Diagnostics Grade / Military Style:** Connectors show no evidence of corrosion after exposure to 48 hours of salt spray per MIL-STD 1344 method 1001.