HIGH VOLTAGE ULTRA HIGH SENSITIVITY HALL EFFECT LATCH WITH INTERNAL PULL_UP RESISTOR

NEW PRODUCT

Description

The AH3382 is a high voltage ultra high sensitivity Hall Effect Unipolar switch IC designed for proximity, position and level sensing in industrial and consumer home appliances and personal care applications. To support wide range of demanding applications, the design has been optimized to operate over the supply range of 3.0V to 28V. With chopper stabilized architecture and an internal bandgap regulator to provide temperature compensated supply for internal circuits, the AH3382 provides a reliable solution over the whole operating range. For robustness and protection, the device has a reverse blocking diode with a Zener clamp on the supply. The output has an over current limit and a Zener clamp.

The internally pulled-up output can be switched on with South pole of sufficient strength. When the magnetic flux density (**B**) perpendicular to the package is larger than the operate point ($\mathbf{B_{OP}}$) the output is switched on (pulled low) and is held on until magnetic flux density B is lower than the release point ($\mathbf{B_{RP}}$). The output remains switched off for North pole fields to or no magnetic fields.

The magnetic operating and release polarity is opposite for SOT23 and SC59 packages. The SOT23 and SIP-3 (Ammo Pack), SIP-3 (Bulk Pack) packages will require south pole to the part marking side to operate while SC59 will require south pole to the non-part marking side.

Pin Assignments

(TOP View)

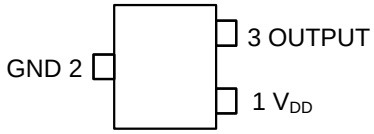

SC59 and SOT23

(TOP View)

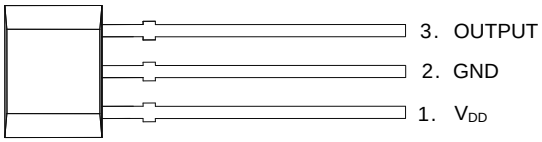

SIP-3 (Bulk Pack)

Features

- Unipolar Operation
- High Sensitivity: B_{OP} and B_{RP} of +55G and +35G Typical
- Internally Pull-up Resistor on the Output with Over Current Limit
- 3.0V to 28V Operating Voltage Range
- Chopper Stabilized Design Provides
  - Superior Temperature Stability
  - Minimal Switch Point Drift
  - Enhanced Immunity to Stress
- Good RF Noise Immunity
- Reverse Blocking Diode
- Zener Clamp on Supply and Output Pins
- -40°C to +125°C Operating Temperature
- ESD: HBM > 6kV
- Industry Standard SC59, SOT23 and SIP-3 (Ammo Pack), SIP-3 (Bulk Pack) Packages
- **Totally Lead-Free & Fully RoHS Compliant (Notes 1 & 2)**
- **Halogen and Antimony Free. "Green" Device (Note 3)**

Applications

- Position and Proximity Sensing in Industrial Applications
- Applications
- Open and Close Detect
- Position Detect
- Level Detect
- Flow Meters
- Contact-less Switches

Notes:
1. No purposely added lead. Fully EU Directive 2002/95/EC (RoHS), 2011/65/EU (RoHS 2) & 2015/863/EU (RoHS 3) compliant.
2. See https://www.diodes.com/quality/lead-free/ for more information about Diodes Incorporated's definitions of Halogen- and Antimony-free, "Green" and Lead-free.
3. Halogen- and Antimony-free "Green" products are defined as those which contain <900ppm bromine, <900ppm chlorine (<1500ppm total Br + Cl) and <1000ppm antimony compounds.

© Diodes Incorporated

NEW PRODUCT

Typical Applications Circuit

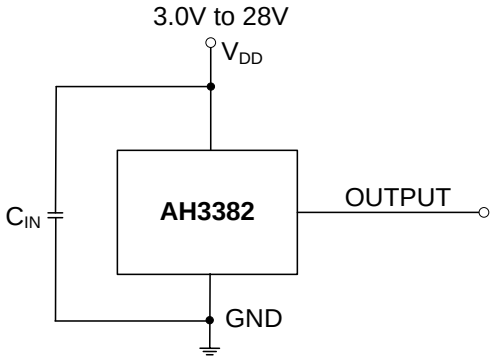

Note: 4. C_{IN} is for power stabilization and to strengthen the noise immunity, the recommended capacitance is 10nF ~ 100nF.

Pin Descriptions

Package: SC59, SOT23 and SIP-3 (Ammo Pack), SIP-3 (Bulk Pack)

Pin Number	Pin Name	Function
1	V_{DD}	Power Supply Input
2	GND	Ground
3	OUTPUT	Output Pin

Functional Block Diagram

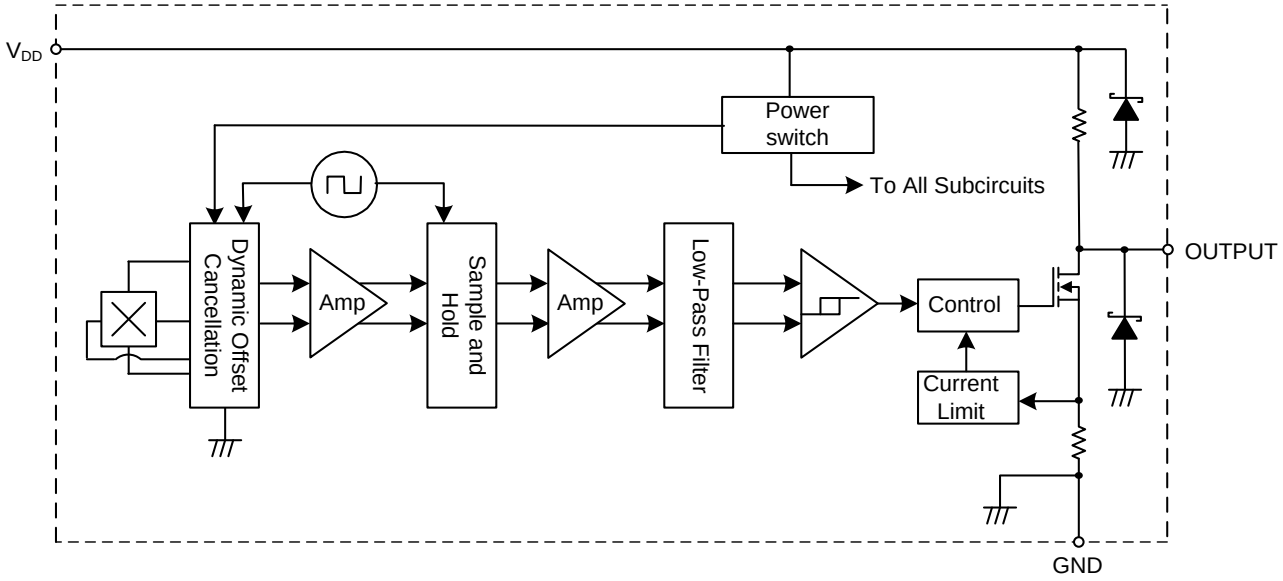

© Diodes Incorporated

NEW PRODUCT

Absolute Maximum Ratings (Notes 5 & 6) (@T_A = +25°C, unless otherwise specified.)

Symbol	Characteristic		Value	Unit
V_{DD}	Supply Voltage (Note 6)		32	V
V_{DDR}	Reverse Supply Voltage (Note 6)		-32	V
V_{OUT_MAX}	Output Off Voltage (Note 6)		32	V
I_{OUT}	Continuous Output Current		60	mA
I_{OUT_R}	Reverse Output Current		-50	mA
B	Magnetic Flux Density		Unlimited	
P_D	Package Power Dissipation	SIP-3 (Ammo Pack), SIP-3 (Bulk Pack)	550	mW
		SC59 and SOT23	230	
Ts	Storage Temperature Range		-65 to +165	°C
T_J	Maximum Junction Temperature		+150	°C
ESD HBM	Electros Static Discharge Withstand - Human Body Model (HBM)		6	kV

Notes:
5. Stresses greater than the 'Absolute Maximum Ratings' specified above may cause permanent damage to the device. These are stress ratings only; functional operation of the device at these or any other conditions exceeding those indicated in this specification is not implied. Device reliability may be affected by exposure to absolute maximum rating conditions for extended periods of time.
6. The absolute maximum V_{DD} of 32V is a transient stress rating and is not meant as a functional operating condition. It is not recommended to operate the device at the absolute maximum rated conditions for any period of time.

Recommended Operating Conditions (@T_A = -40°C to +125°C, unless otherwise specified.)

Symbol	Parameter	Condition	Rating	Unit
V_{DD}	Supply Voltage	Operating	3.0 to 28	V
T_A	Operating Temperature Range	Operating	-40 to +125	°C

Electrical Characteristics (Note 7 & 8) (@T_A = -40°C to +125°C, V_{DD} = 3V to 28V, unless otherwise specified.)

Symbol	Parameter	Condition	Min	Typ	Max	Unit
V_{OUT_ON}	Output ON Voltage	I_{OUT} = 20mA, B > B_{OP}	-	0.2	0.4	V
I_{LKG}	Output Leakage Current (When output is off)	V_{OUT} = 28V, B < B_{RP}, Output off	-	<0.1	10	μA
I_{DD}	Supply Current	Output open, T_A = +25°C	-	3	3.5	mA
		Output open, T_A = -40°C to +125°C	-	-	4	mA
R_{PU}	Internal Pull-Up Resistance	T_A = -40°C to 125°C,	10	14	18	kΩ
t_{ST}	Device Start-Up Time	V_{DD} >= 3V, B > B_{OP} (Note 7)	-	10	-	μs
f_C	Chopping Frequency	-	-	800	-	kHz
t_D	Response Time Delay (Time from magnetic threshold reached to the start of the output rise or fall)	(Note 9)	-	3.75	-	μs
t_R	Output Rising Time (External pull-up resistor R_L and load capacitance dependent)	R_L = 1kΩ, C_L = 20pF	-	0.2	1	μs
t_F	Output Falling Time (Internal switch resistance and load capacitance dependent)	R_L = 1kΩ, C_L = 20pF	-	0.1	1	μs
I_{OCL}	Output Current Limit	B > B_{OP}, (Note 10)	30	-	55	mA
V_Z	Zener Clamp Voltage	I_{DD} = 5mA	28	-	-	V

Notes:
7. When power is initially turned on, V_{DD} must be within its correct operating range (3.0V to 28V) to guarantee the output sampling. The output state is valid after the start-up time of 10μs typical from the operating voltage reaching 3V.
8. Typical values are defined at T_A = +25°C, V_{DD} = 12V. Maximum and minimum values over the operating temperature range is not tested in production but guaranteed by design, process control and characterization.
9. Guaranteed by design, process control and characterization, Not tested in production.
10. The device will limit the output current I_{OUT} to current limit of I_{OCL}.

© Diodes Incorporated

NEW PRODUCT

Magnetic Characteristics (Notes 11 &12) (T_A = -40°C to +125°C, V_{DD} = 3.0V to 28V, unless otherwise specified.)

(1mT=10 Gauss)

Symbol	Parameter	Condition	Min	Typ	Max	Unit
B_{OPS} (South pole to part marking side for SOT23 and SIP-3 (Ammo Pack), SIP-3 (Bulk Pack) packages; South pole to the non-part marking side for SC59 package. See diagram below)	Operation Point	V_{DD} = 12V, T_A = +25°C	-	55	-	Gauss
		T_A = -40°C to +125°C	40	55	70	
B_{RPS} (South pole to part marking side for SOT23 and SIP-3 (Ammo Pack), SIP-3 (Bulk Pack) packages; South pole to the non-part marking side for SC59 package. See diagram below)	Release Point	V_{DD} = 12V, T_A = +25°C	-	35	-	
		T_A = -40°C to +125°C	20	35	50	
B_{HY} ($\|B_{OPX}\|$-$\|B_{RPX}\|$)	Hysteresis (Note 13)	V_{DD} = 12V, T_A = +25°C	-	20	-	
		T_A = -40°C to +125°C	15	20	25	

Notes:
11. When power is initially turned on, V_{DD} must be within its correct operating range (3.0V to 28V) to guarantee the output sampling. The output state is valid after the start-up time of 10μs typical from the operating voltage reaching 3V.
12. Typical values are defined at T_A = +25°C, V_{DD} = 12V. Maximum and minimum values over the operating temperature range is not tested in production but guaranteed by design, process control and characterization
13. Maximum and minimum hysteresis is guaranteed by design, process control and characterization.

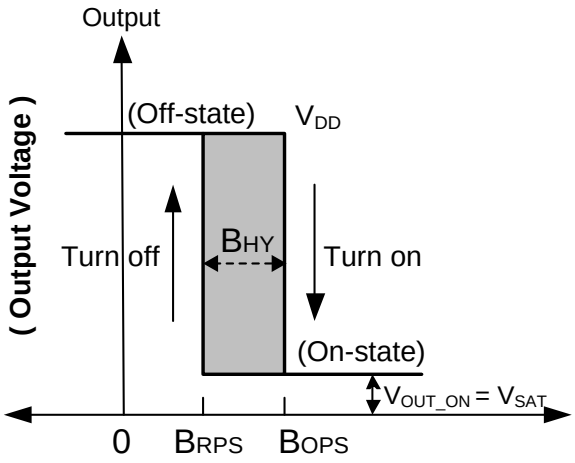

(Magnetic Flux Density B)

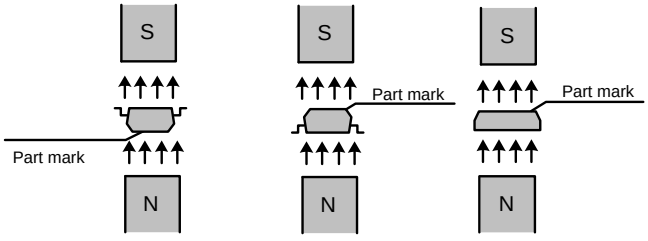

SC59 **SOT23** **SIP-3(Ammo Pack)** **SIP-3(Bulk Pack)**

© Diodes Incorporated

NEW PRODUCT

Typical Operating Characteristics

Output Switch Operate and Release Points (Magnetic Thresholds) – B_{OPS} and B_{RPS}

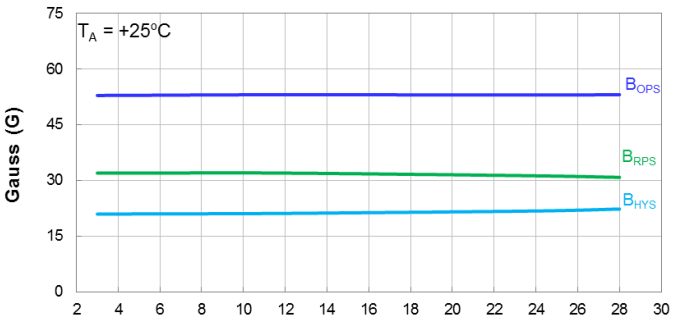

Switch Points B_{OPS} and B_{RPS} vs Supply Voltage

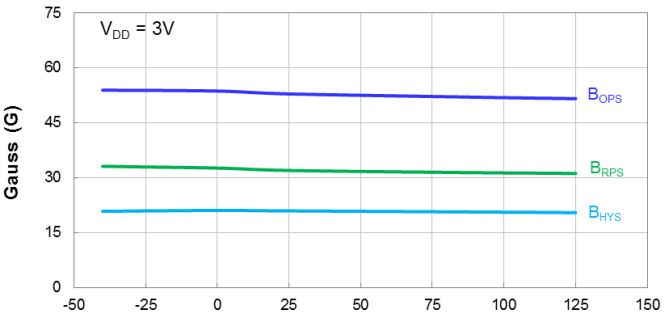

Switch Points B_{OPS} and B_{RPS} vs Temperature

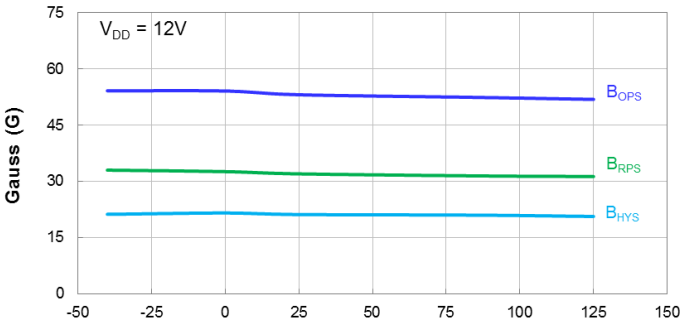

Switch Points B_{OPS} and B_{RPS} vs Temperature

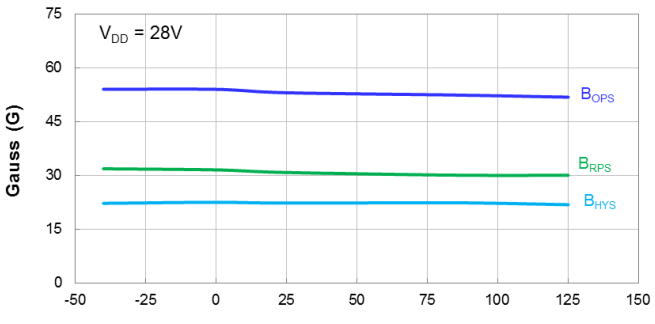

Switch Points B_{OPS} and B_{RPS} vs Temperature

Supply Current

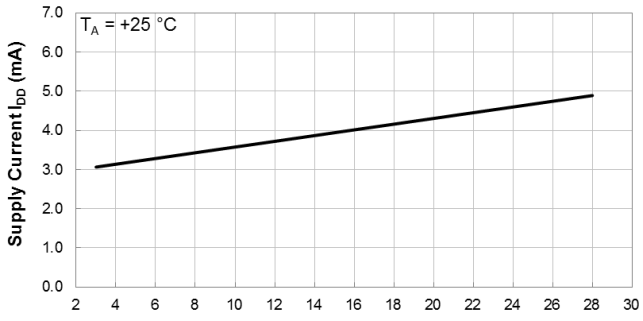

Supply Current vs Supply Voltage

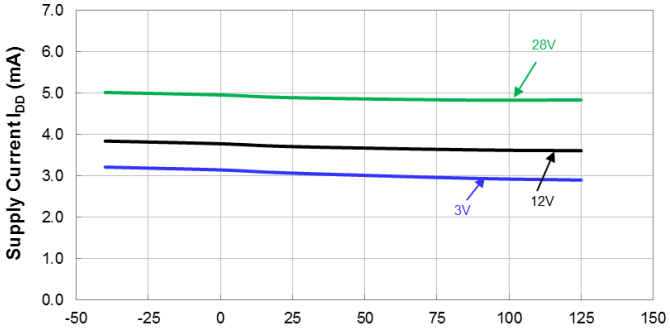

Supply Current vs Temperature

© Diodes Incorporated

NEW PRODUCT

Typical Operating Characteristics (Cont.)

Output Switch On Voltage

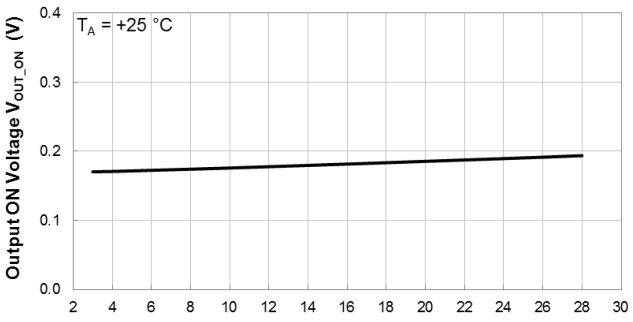

Output ON Voltage vs Supply Voltage

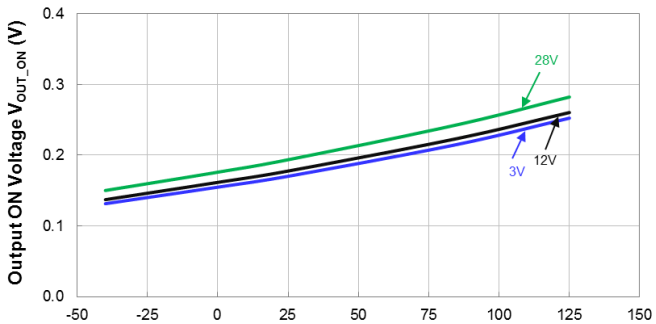

Output ON Voltage vs Temperature

Output Pull-Up Resistor (Internal)

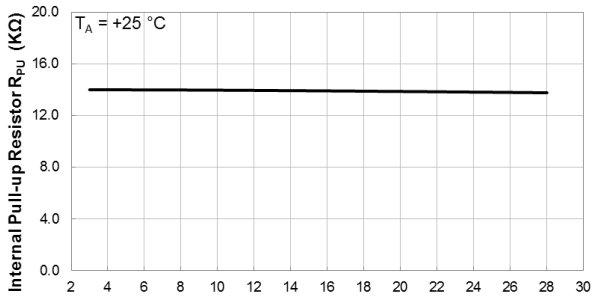

Internal Output Pull-up Resistor vs Supply Voltage

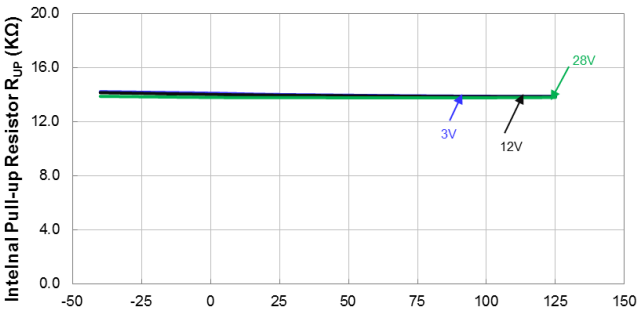

Internal Output Pull-up Resistor vs Temperature

Output Current Limit

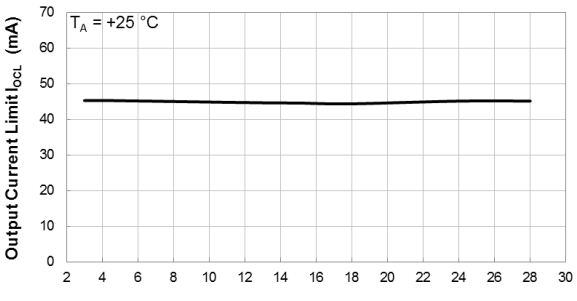

Output Current Limit vs Supply Voltage

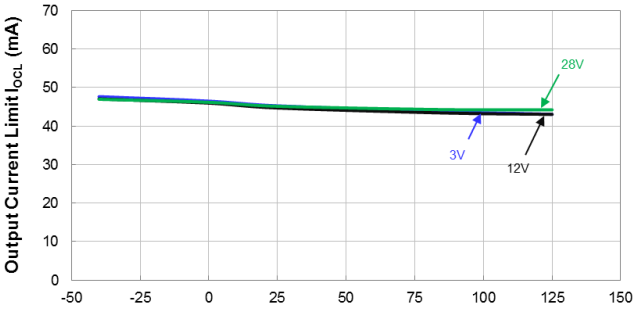

Output CurrentLimit vs Temperature

© Diodes Incorporated

NEW PRODUCT

Thermal Performance Characteristics

(1) Package Type: SC59 and SOT23

T_A (°C)	25	50	60	70	80	85	90	100	105	110	120	125	130	140	150
P_D (mW)	230	184	166	147	129	120	110	92	83	74	55	46	37	18	0

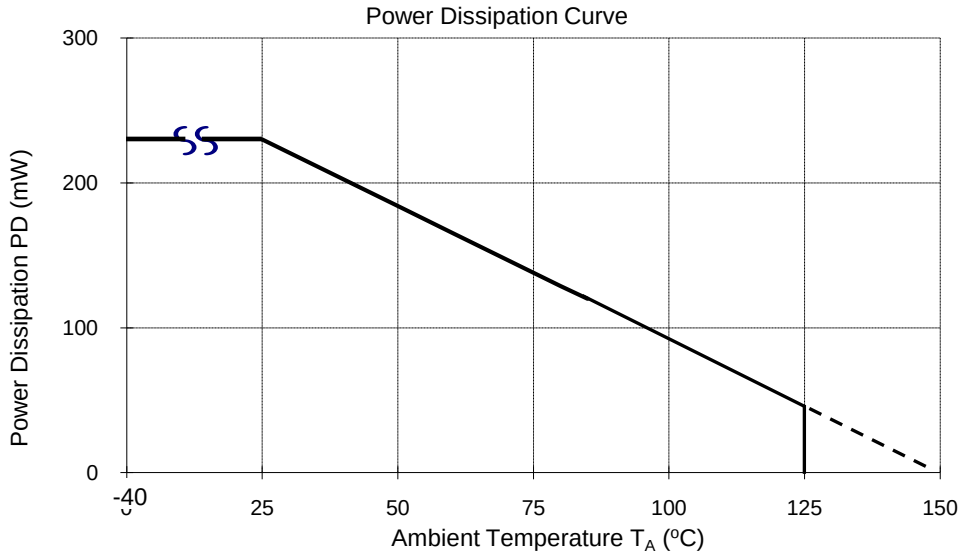

(2) Package Type: SIP-3 (Ammo Pack), SIP-3 (Bulk Pack)

T_A (°C)	25	50	60	70	80	85	90	100	105	110	120	125	130	140	150
P_D (mW)	550	440	396	362	308	286	264	220	198	176	132	110	88	44	0

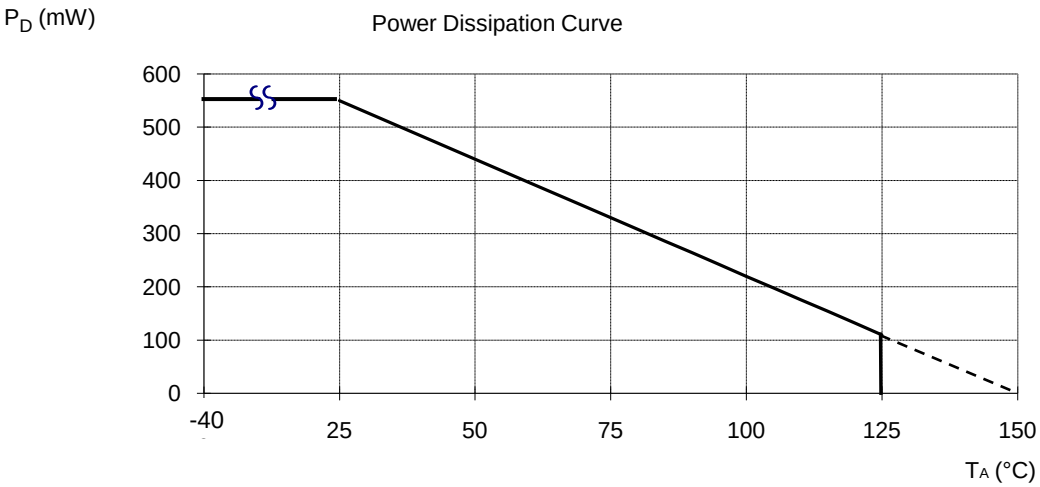

© Diodes Incorporated

NEW PRODUCT

Ordering Information

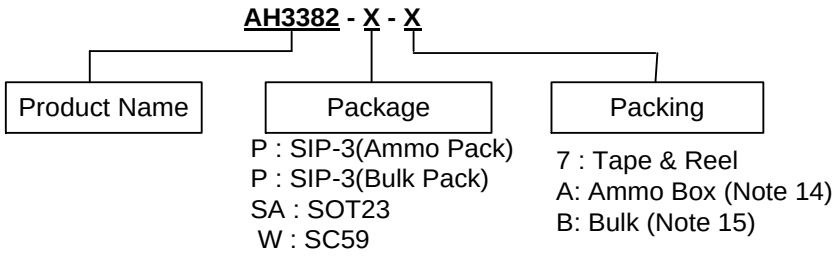

Part Number	Package Code	Packaging	Bulk		7" Tape and Reel		Ammo Box	
			Quantity	Part Number Suffix	Quantity	Part Number Suffix	Quantity	Part Number Suffix
AH3382-P-A	P	SIP-3 (Ammo Pack)	NA	NA	NA	NA	4000/Box	-A
AH3382-P-B	P	SIP-3 (Bulk Pack)	1000	-B	NA	NA	NA	NA
AH3382-SA-7	SA	SOT23	NA	NA	3000/Tape & Reel	-7	NA	NA
AH3382-W-7	W	SC59	NA	NA	3000/Tape & Reel	-7	NA	NA

Notes: 14. Ammo Box is for SIP-3 (Ammo Pack) Spread Lead.
15. Bulk is for SIP-3 (Bulk Pack) Straight Lead.

Marking Information

(1) Package Type: SC59 and SOT23

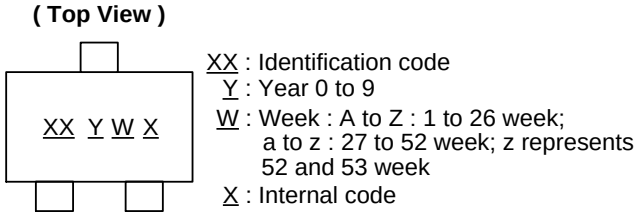

Part Number	Package	Identification Code
AH3382	SC59	DU
AH3382	SOT23	MU

(2) Package Type: SIP-3 (Ammo Pack), SIP-3 (Bulk Pack)

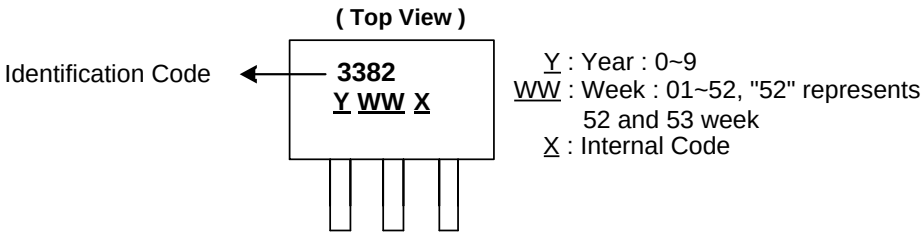

Part Number	Package	Identification Code
AH3382	SIP-3 (Ammo Pack)	3382
AH3382	SIP-3 (Bulk Pack)	3382

© Diodes Incorporated

NEW PRODUCT

Package Outline Dimensions (All dimensions in mm.)

Please see http://www.diodes.com/package-outlines.html for the latest version.

(1) Package Type: SC59

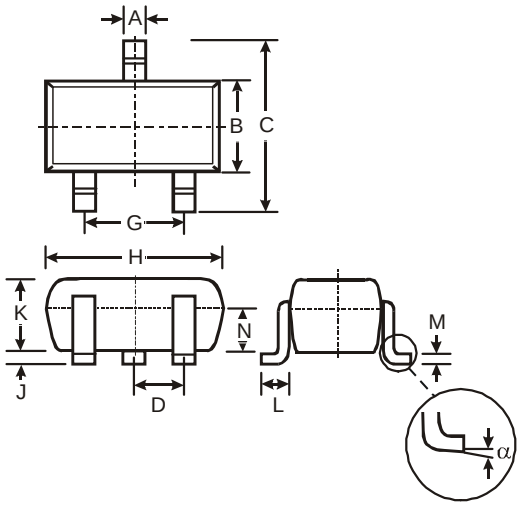

SC59			
Dim	**Min**	**Max**	**Typ**
A	0.35	0.50	0.38
B	1.50	1.70	1.60
C	2.70	3.00	2.80
D	-	-	0.95
G	-	-	1.90
H	2.90	3.10	3.00
J	0.013	0.10	0.05
K	1.00	1.30	1.10
L	0.35	0.55	0.40
M	0.10	0.20	0.15
N	0.70	0.80	0.75
α	0°	8°	-
All Dimensions in mm			

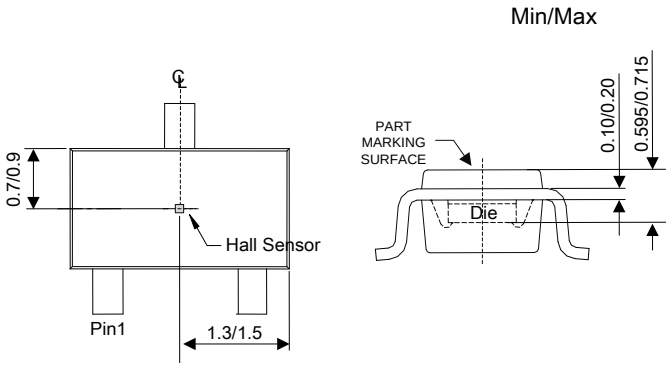

Sensor Location

© Diodes Incorporated

NEW PRODUCT

Package Outline Dimensions (Cont.) (All dimensions in mm.)

Please see http://www.diodes.com/package-outlines.html for the latest version.

(2) Package Type: SOT23

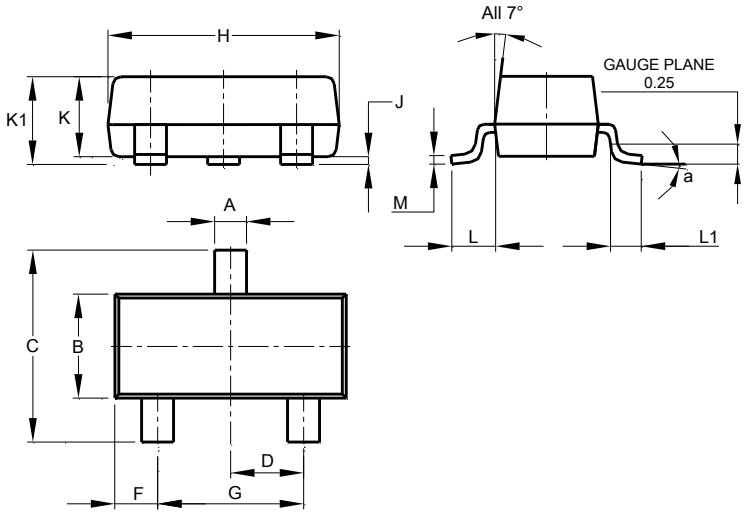

SOT23			
Dim	**Min**	**Max**	**Typ**
A	0.37	0.51	0.40
B	1.20	1.40	1.30
C	2.30	2.50	2.40
D	0.89	1.03	0.915
F	0.45	0.60	0.535
G	1.78	2.05	1.83
H	2.80	3.00	2.90
J	0.013	0.10	0.05
K	0.890	1.00	0.975
K1	0.903	1.10	1.025
L	0.45	0.61	0.55
L1	0.25	0.55	0.40
M	0.085	0.150	0.110
a	0°	8°	--
All Dimensions in mm			

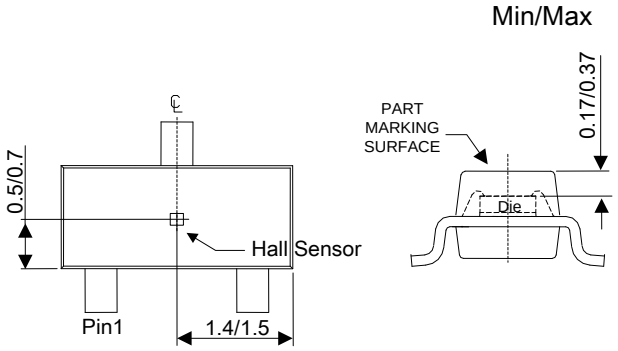

Sensor Location

© Diodes Incorporated

NEW PRODUCT

Package Outline Dimensions (Cont.) (All dimensions in mm.)

Please see http://www.diodes.com/package-outlines.html for the latest version.

(3) Package Type: SIP-3 (Bulk Pack)

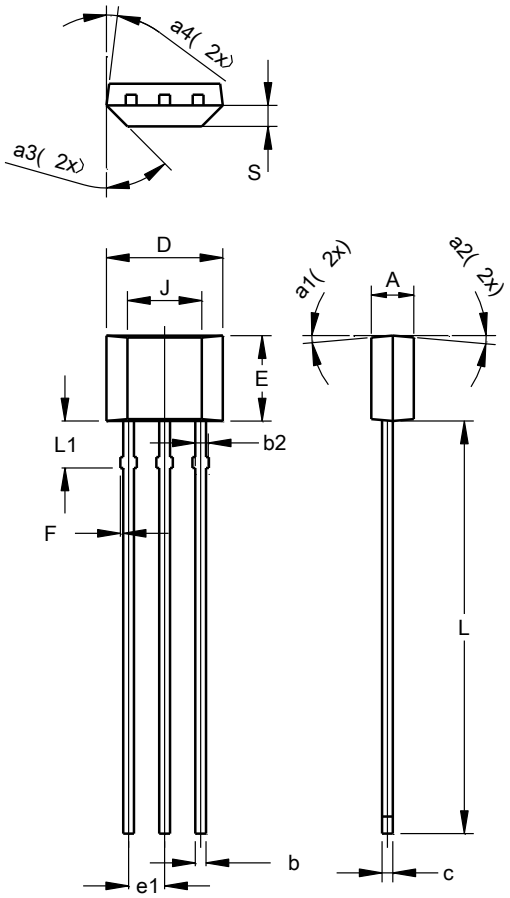

SIP-3 (Bulk Pack)			
Dim	**Min**	**Max**	**Typ**
A	1.40	1.60	1.50
b	0.33	0.43	0.38
b2	0.40	0.508	0.46
c	0.35	0.41	0.38
D	3.90	4.30	4.10
E	2.80	3.20	3.00
e1	1.24	1.30	1.27
F	0.00	0.20	--
J	2.62 REF		
L	14.00	15.00	14.50
L1	1.55	1.75	1.65
S	0.63	0.84	0.74
a1	--	--	5°
a2	--	--	5°
a3	--	--	45°
a4	--	--	3°
All Dimensions in mm			

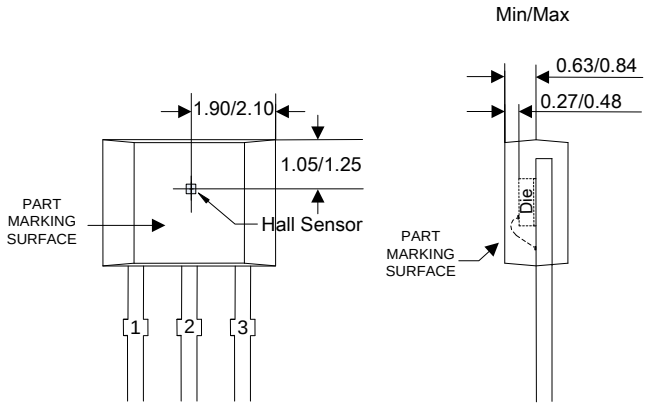

Sensor Location

© Diodes Incorporated

NEW PRODUCT

Package Outline Dimensions (Cont.) (All dimensions in mm.)

Please see http://www.diodes.com/package-outlines.html for the latest version.

(4) Package Type: SIP-3 (Ammo Pack)

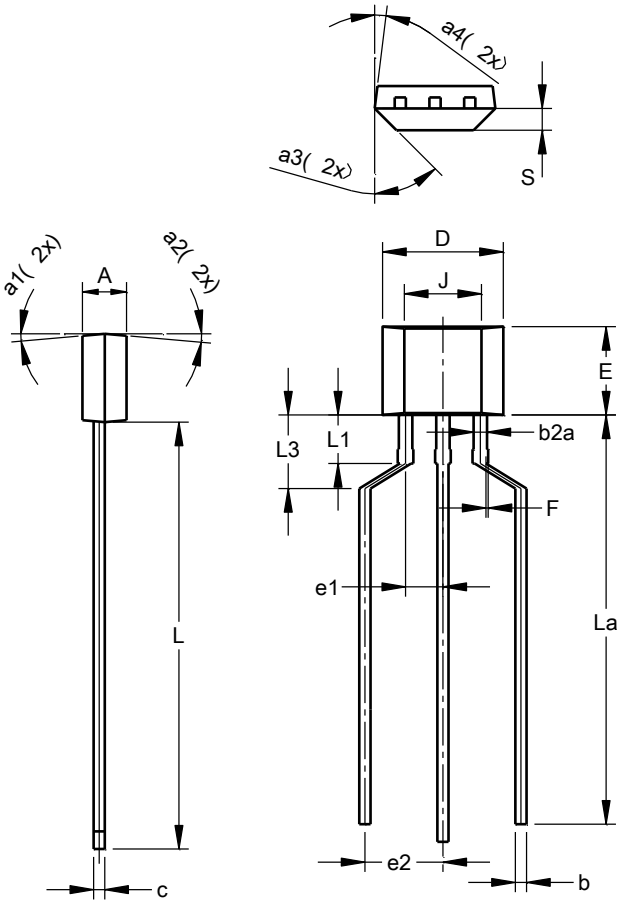

SIP-3 (Ammo Pack)			
Dim	**Min**	**Max**	**Typ**
A	1.40	1.60	1.50
b	0.33	0.43	0.38
b2a	0.40	0.52	0.46
c	0.35	0.41	0.38
D	3.90	4.30	4.10
E	2.80	3.20	3.00
e1	1.24	1.30	1.27
e2	2.40	2.90	2.65
F	0.00	0.20	--
J	2.62 REF		
L	14.00	15.00	14.50
La	12.90	14.90	13.90
L1	1.55	1.75	1.65
L3	2.00	3.00	2.50
S	0.63	0.84	0.74
a1	--	--	5°
a2	--	--	5°
a3	--	--	45°
a4	--	--	3°
All Dimensions in mm			

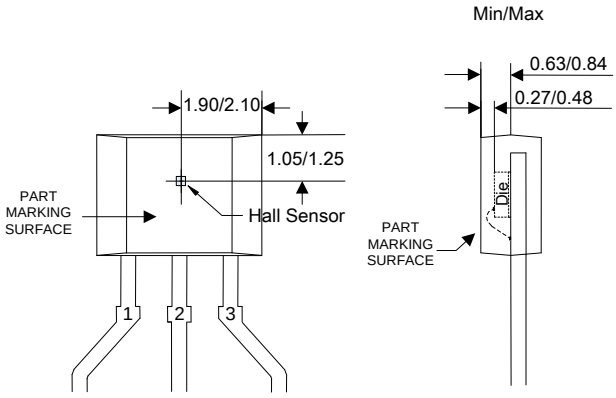

Sensor Location

© Diodes Incorporated

NEW PRODUCT

Suggested Pad Layout

Please see http://www.diodes.com/package-outlines.html for the latest version.

(1) Package Type: SC59

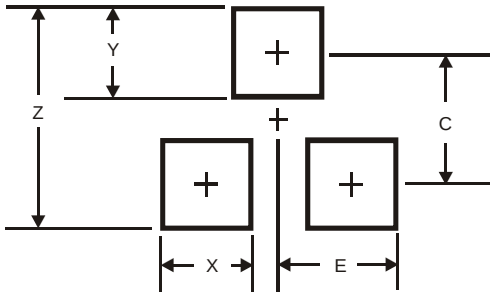

Dimensions	Value (in mm)
Z	3.4
X	0.8
Y	1.0
C	2.4
E	1.35

(2) Package Type: SOT23

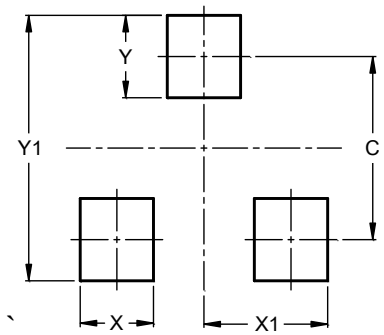

Dimensions	Value (in mm)
C	2.0
X	0.8
X1	1.35
Y	0.9
Y1	2.9

© Diodes Incorporated

NEW PRODUCT

IMPORTANT NOTICE

DIODES INCORPORATED MAKES NO WARRANTY OF ANY KIND, EXPRESS OR IMPLIED, WITH REGARDS TO THIS DOCUMENT, INCLUDING, BUT NOT LIMITED TO, THE IMPLIED WARRANTIES OF MERCHANTABILITY AND FITNESS FOR A PARTICULAR PURPOSE (AND THEIR EQUIVALENTS UNDER THE LAWS OF ANY JURISDICTION).

Diodes Incorporated and its subsidiaries reserve the right to make modifications, enhancements, improvements, corrections or other changes without further notice to this document and any product described herein. Diodes Incorporated does not assume any liability arising out of the application or use of this document or any product described herein; neither does Diodes Incorporated convey any license under its patent or trademark rights, nor the rights of others. Any Customer or user of this document or products described herein in such applications shall assume all risks of such use and will agree to hold Diodes Incorporated and all the companies whose products are represented on Diodes Incorporated website, harmless against all damages.

Diodes Incorporated does not warrant or accept any liability whatsoever in respect of any products purchased through unauthorized sales channel. Should Customers purchase or use Diodes Incorporated products for any unintended or unauthorized application, Customers shall indemnify and hold Diodes Incorporated and its representatives harmless against all claims, damages, expenses, and attorney fees arising out of, directly or indirectly, any claim of personal injury or death associated with such unintended or unauthorized application.

Products described herein may be covered by one or more United States, international or foreign patents pending. Product names and markings noted herein may also be covered by one or more United States, international or foreign trademarks.

This document is written in English but may be translated into multiple languages for reference. Only the English version of this document is the final and determinative format released by Diodes Incorporated.

LIFE SUPPORT

Diodes Incorporated products are specifically not authorized for use as critical components in life support devices or systems without the express written approval of the Chief Executive Officer of Diodes Incorporated. As used herein:

A. Life support devices or systems are devices or systems which:

1. are intended to implant into the body, or
2. support or sustain life and whose failure to perform when properly used in accordance with instructions for use provided in the labeling can be reasonably expected to result in significant injury to the user.

B. A critical component is any component in a life support device or system whose failure to perform can be reasonably expected to cause the failure of the life support device or to affect its safety or effectiveness.

Customers represent that they have all necessary expertise in the safety and regulatory ramifications of their life support devices or systems, and acknowledge and agree that they are solely responsible for all legal, regulatory and safety-related requirements concerning their products and any use of Diodes Incorporated products in such safety-critical, life support devices or systems, notwithstanding any devices- or systems-related information or support that may be provided by Diodes Incorporated. Further, Customers must fully indemnify Diodes Incorporated and its representatives against any damages arising out of the use of Diodes Incorporated products in such safety-critical, life support devices or systems.

Copyright © 2018, Diodes Incorporated

www.diodes.com