AH202

1W High Linearity Amplifier

Product Features

- 50 – 2200 MHz
- +30 dBm P1dB
- +47 dBm Output IP3
- 17 dB Gain @ 900 MHz
- MTTF >100 Years
- Single Positive Supply
- Internally Matched
- Lead-free/RoHS-compliant 6x6mm QFN SMT package

Applications

- Mobile Infrastructure
- CATV / DBS
- Optimal for VHF / UHF broadband applications
- Defense / Homeland Security

Product Description

The AH202 is a 1-Watt driver amplifier that offers excellent dynamic range in a low-cost, lead-free/RoHS-compliant 6x6 mm 28-pin QFN surface-mount package. This device provides its optimum P1dB and OIP3 performance when biased at + 11 V; It can also be biased as low as +9 V for lower power applications.

The backside metalization provides excellent thermal dissipation while allowing visible evidence of solder reflow across the bottom of the package on a SMT board. Superior thermal design allows the product an MTTF of over 100 years at a mounting temperature of +85º C. All devices are 100% RF & DC tested.

The product is targeted for use as a driver amplifier for wireless infrastructure or CATV applications where high linearity and medium power is required.

Functional Diagram

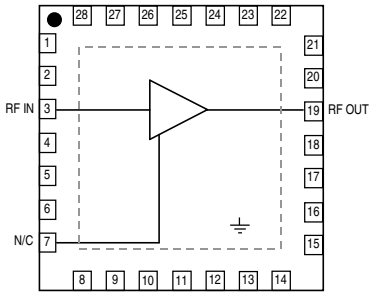

Function	Pin No.
Input	3
No Connect	7
Output/Bias	19
No Connect or Ground	All other pins
Ground	Backside Paddle

Specifications (1)

Parameters	Units	Min	Typ	Max
Operational Bandwidth	MHz	50		2200
Test Frequency	MHz		800	
Gain	dB	14	17	
Input Return Loss	dB		20	
Output Return Loss	dB		18	
Output P1dB	dBm	+29	+30	
Output IP3 (2)	dBm	+45	+47	
Noise Figure	dB		2.5	
IS-95 Channel Power (3) @ -45dBc ACPR	dBm		+24	
Operating Current Range	mA		330	390
Supply Voltage	V		+11	

1. Test conditions unless otherwise noted: 25ºC, Vdd = 11 V in a 50-Ω matched fixture.
2. 3OIP measured with two tones at an output power of +10 dBm/tone separated by 10 MHz. The suppression on the largest IM3 product is used to calculate the 3OIP using a 2:1 rule.
3. IS-95, 9 Channels Forward, Pk/Avg Ratio = 11.5 dB at a .001% probability, ±885 kHz offset, 30 kHz bandwidth, Channel BW = 1.23 MHz.

Typical Performance (4)

Parameters	Units	Typical		
Frequency	MHz	900	1900	2140
Gain	dB	17	15	15
Input Return Loss	dB	20	17	8
Output Return Loss	dB	18	10	13
Output P1dB	dBm	+30	+29.7	+29.4
Output IP3	dBm	+47	+46	+45.5
Noise Figure	dB	2.8	3.8	4.8
IS-95 Channel Power (3) @ -45dBc ACPR	dBm	+24	+23	-
WCDMA Channel Power (5) @ -45dBc ACLR	dBm	-	-	+20.5
Supply Bias		+11 V @ 330 mA		

4. Data reflects performance of a typical AH202 in an application circuit including associated circuit board and passive component losses.
5. 3GPP W-CDMA, Test Model 1, +32 DPCH, Pk/Avg Ratio = 8.5 dB at a 0.01% probability, ±5 MHz offset, Integrated Channel BW = 3.84 MHz.

Absolute Maximum Rating

Parameter	Rating
Operating Case Temperature	-40 to +85 °C
Storage Temperature	-55 to +125 °C
DC Voltage	+13 V
RF Input Power (continuous)	+16 dBm
Maximum Junction Temperature	+220 °C

Operation of this device above any of these parameters may cause permanent damage.

Ordering Information

Part No.	Description
AH202-F	1W High Linearity Amplifier (lead-free/RoHS-compliant 6x6mm QFN package)
AH202-PCB900	900 MHz Evaluation Board
AH202-PCB1900	1900 MHz Evaluation Board
AH202-PCB2140	2140 MHz Evaluation Board

Specifications and information are subject to change without notice

Typical Device Data

S-parameters (V_{DS} = +11 V, I_{DS} = 330mA, unmatched device in a 50 Ω system).

- Measurements are shown for an unmatched packaged device with the data being de-embedded to the device leads.

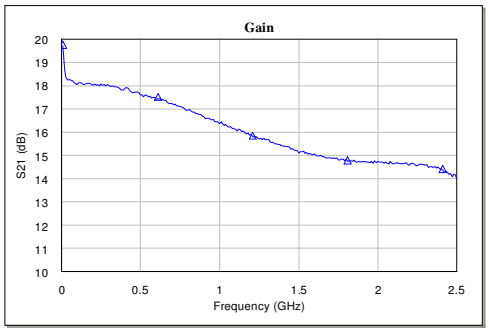

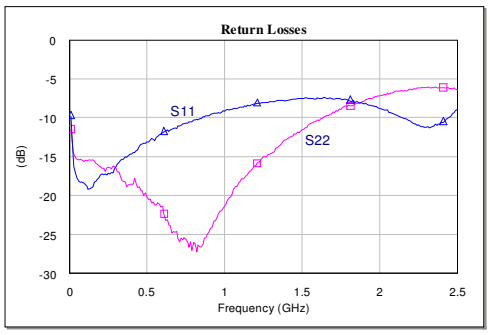

S-Parameters (V_{DS} = +11.0V, I_{DS} = 330mA, T = +25°C, unmatched device in a 50 Ω system)

Freq (MHz)	S11 (dB)	S11 (ang)	S21 (dB)	S21 (ang)	S12 (dB)	S12 (ang)	S22 (dB)	S22 (ang)
50	-17.78	-137.86	18.26	169.32	-21.43	1.41	-15.33	-170.64
100	-18.60	-153.83	18.06	166.20	-21.34	-4.54	-15.51	177.37
200	-17.34	-150.80	18.03	156.86	-21.46	-12.16	-16.27	161.24
400	-14.70	-149.17	17.87	135.75	-21.84	-25.03	-18.57	135.96
600	-11.92	-159.61	17.43	115.76	-22.34	-37.49	-21.38	93.89
800	-10.29	-171.08	16.93	96.20	-22.96	-48.84	-26.07	25.81
1000	-9.20	174.71	16.36	77.49	-23.72	-61.29	-21.37	-47.34
1200	-8.23	160.52	15.90	58.22	-24.54	-73.36	-16.16	-78.06
1400	-7.74	145.06	15.43	40.52	-25.32	-85.56	-12.76	-98.55
1600	-7.43	127.89	15.04	23.04	-26.07	-99.09	-10.27	-114.42
1800	-7.73	108.79	14.82	4.23	-26.69	-115.15	-8.39	-129.46
2000	-8.76	84.28	14.72	-15.48	-26.94	-132.95	-7.17	-144.14
2200	-10.40	43.69	14.59	-38.77	-26.60	-155.57	-6.37	-158.61
2400	-10.57	-24.74	14.42	-65.43	-25.80	176.52	-6.14	-172.06
2600	-6.72	-90.87	13.29	-97.06	-25.02	143.13	-6.69	176.96
2800	-3.60	-136.82	10.89	-128.44	-24.82	111.82	-7.11	173.14
3000	-1.91	-167.99	7.61	-154.46	-25.13	87.68	-6.73	174.58

Application Circuit PC Board Layout

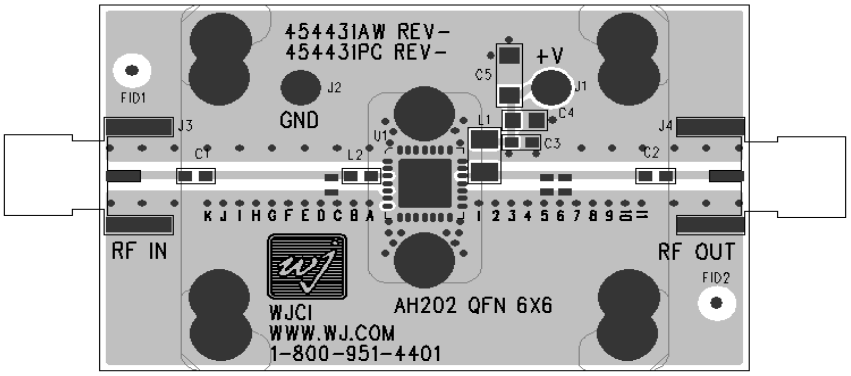

Circuit Board Material: .014" Getek (ε_r=4.2), four layer, 1 oz copper
Microstrip line details: width = .026", spacing = .026"

Reference Design: 50-800 MHz

The AH202 is suitable for applications between 50 – 800 MHz without any requirements for input or output matching. Only bypass and blocking capacitors and an RF bias choke are needed for operation. A user can simply request an AH202-PCB900 Evaluation Board and replace components C1, C2, C3, C6, L1, and L2 to the values shown below to evaluate the device.

Frequency	MHz	50	200	400	600	800
S21 – Gain	dB	18	17.9	17.5	17.0	16.3
S11 – Input Return Loss	dB	-13	-17	-15	-12.4	-10.3
S22 – Output Return Loss	dB	-13	-15	-17	-22	-28
Output P1dB	dBm	+30				
Output IP3 (+10 dBm / tone, 10 MHz spacing)	dBm	+47				
Supply Bias	dB	+11 V @ 330 mA				

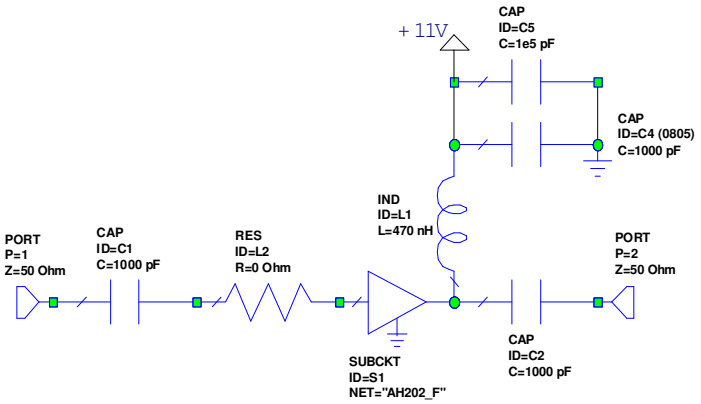

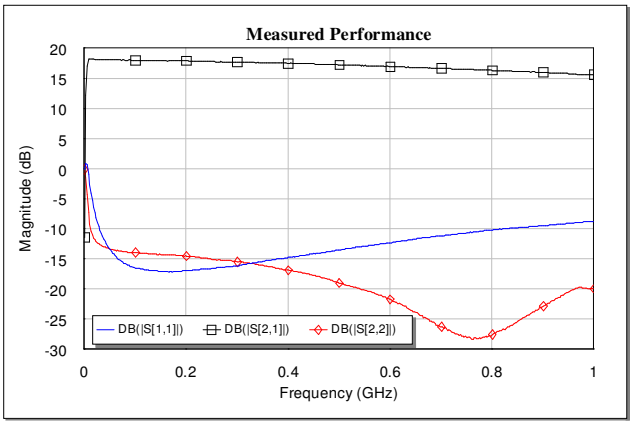

Notes:

- R=0 Ω (at designator L2) is used as a place holder for a different application circuit. It can be removed from the circuit without any effect to the performance.
- The microstrip line is weakly co-planar. Ground planes around it are not necessary for operation of the AH202.
- Adequate heat sinking is required for the device. Further mounting instructions are shown in the AH202 datasheet.
- The RF choke should be a wirewound ceramic type to insure sufficient current carrying capacity. Coilcraft's 1008 CS series is recommended (part #1008CS-471X_B_).

Application Circuit: 900 MHz (AH202-PCB900)

Typical RF Performance at 25°C

Frequency	900 MHz
S21 - Gain	17 dB
S11	- 20 dB
S22	- 18 dB
Output P1dB	+ 30 dBm
Output IP3	+ 47 dBm
IS-95A Ch. Power @ -45 dBc ACPR	+ 24 dBm
Noise Figure	2.8 dB
Supply Voltage	+11 V
Supply Current	330 mA

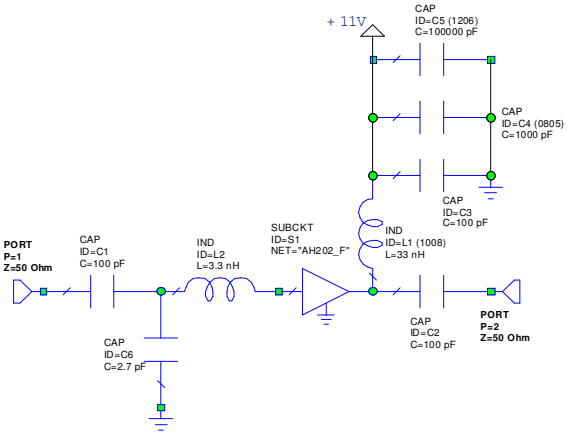

Notes:

1. The amplifier should be connected directly to a +11 V regulator; no dropping resistor is required.
2. If no DC signal is present at the input (pin 1), C1 can be removed. The gate (input pin) is internally grounded in the amplifier.
3. Component sizes are 0603 unless otherwise noted. RF choke L1 should be wirewound ceramic type to insure sufficient current carrying capacity. Coilcraft's 1008 CS series (part # 1008CS-330X_B) is recommended.
4. C6 is located at silk screen marker "C" on the WJ evaluation board.

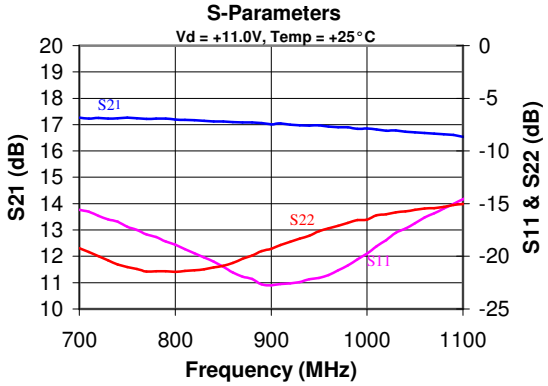

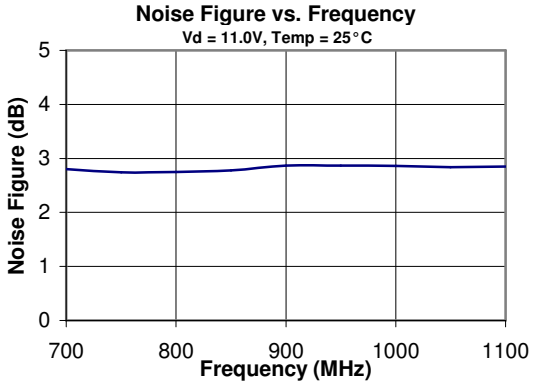

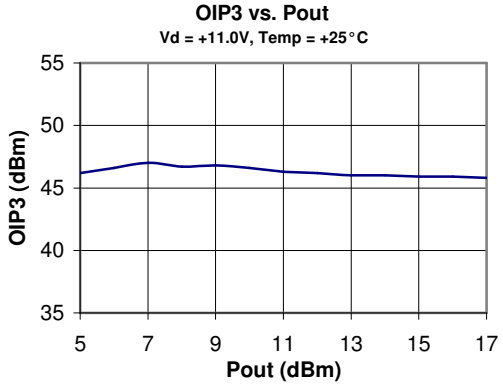

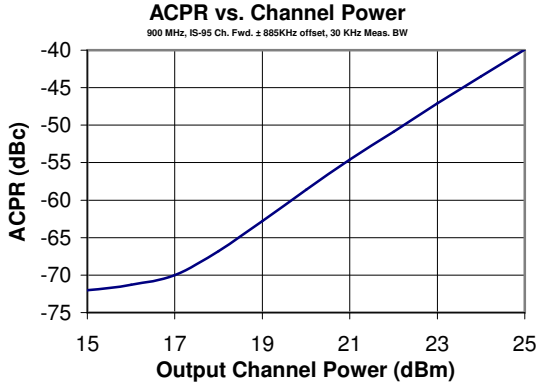

Application Circuit: 1900 MHz (AH202-PCB1900)

Typical RF Performance at 25°C

Frequency	1900 MHz
S21 - Gain	15 dB
S11	- 17 dB
S22	- 10 dB
Output P1dB	+ 29.7 dBm
Output IP3	+ 46 dBm
IS-95A Ch. Power @ -45 dBc ACPR	+ 23 dBm
Noise Figure	3.8 dB
Supply Voltage	+11 V
Supply Current	330 mA

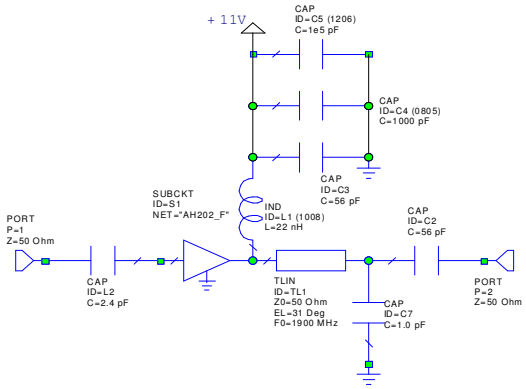

Notes:

1. The amplifier should be connected directly to a +11 V regulator; no dropping resistor is required.
2. Component sizes are 0603 unless otherwise noted. RF choke L1 should be wirewound ceramic type to insure sufficient current carrying capacity. Coilcraft's 1008 CS series (part # 1008CS-220X_B) is recommended.
3. C8 is located at silk screen marker "7" on the WJ evaluation board.

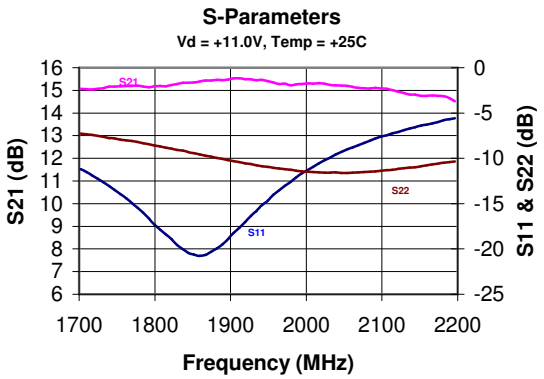

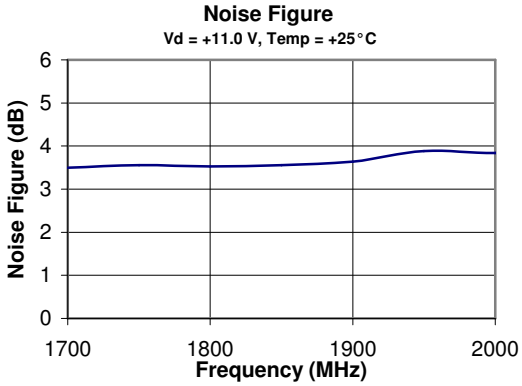

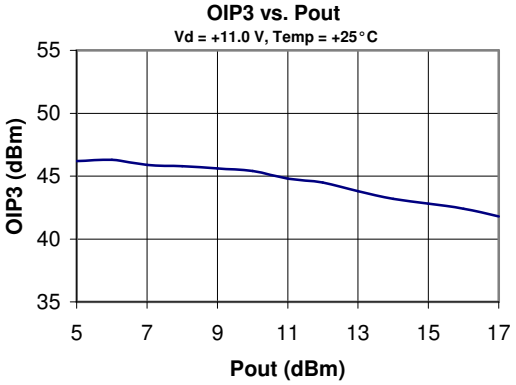

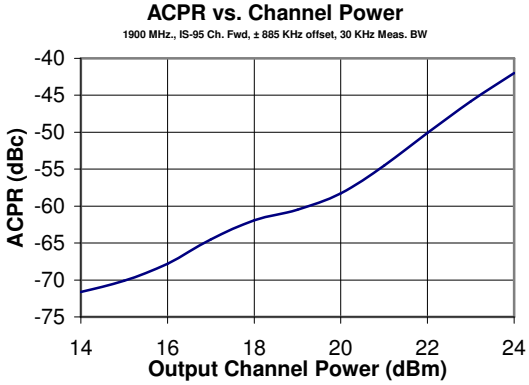

Reference Design: 1900 MHz

using the AH202 in the previously recommended circuit configuration with the AH201 (AH201-PCB1900)

Typical RF Performance at 25°C

Frequency	1900 MHz
S21 - Gain	15 dB
S11	- 8 dB
S22	- 8 dB
Output P1dB	+ 29.7 dBm
Output IP3	+ 46 dBm
IS-95A Ch. Power @ -45 dBc ACPR	+ 23 dBm
Noise Figure	3.8 dB
Supply Voltage	+11 V
Supply Current	330 mA

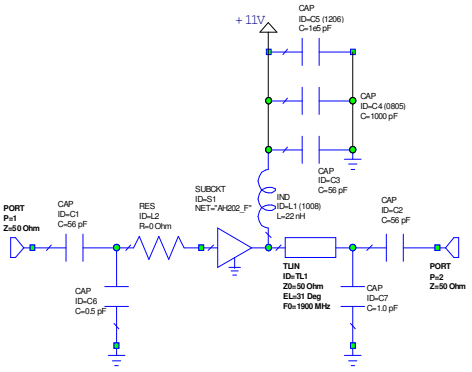

Notes:

1. The amplifier should be connected directly to a +11 V regulator; no dropping resistor is required.
2. If no DC signal is present at the input (pin 1), C1 can be removed. The gate (input pin) is internally grounded in the amplifier.
3. Component sizes are 0603 unless otherwise noted. RF choke L1 should be wirewound ceramic type to insure sufficient current carrying capacity. Coilcraft's 1008 CS series (part # 1008CS-220X_B) is recommended.
4. R = 0 Ω at designator L2 is used as a place holder for a different application circuit. It can be removed from the circuit without any effect to the performance.
5. C6 is located at silk screen marker "C" and C8 is located between silk screen markers "6" and "7" on the WJ evaluation board.

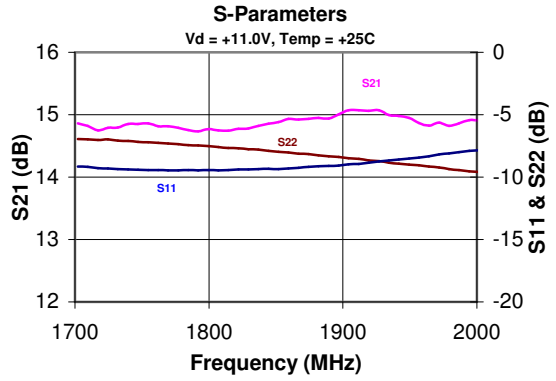

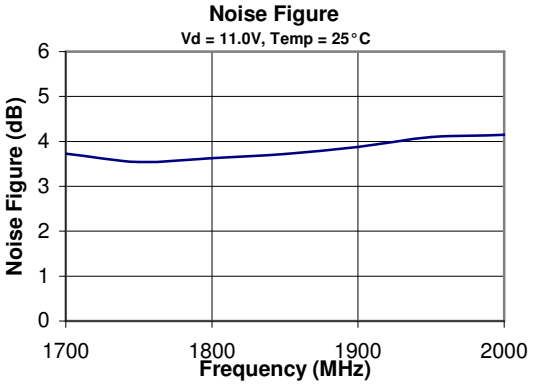

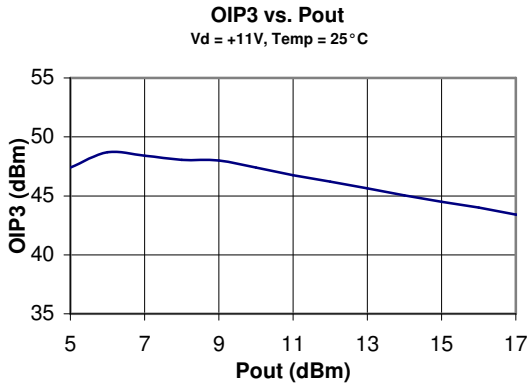

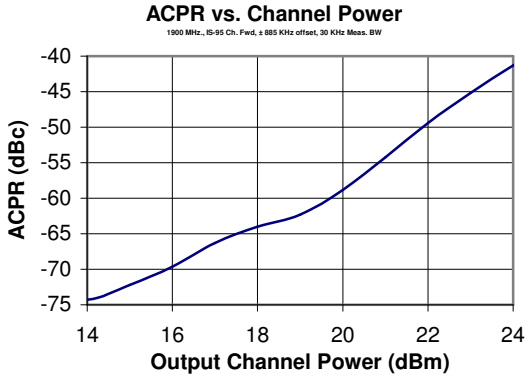

Application Circuit: 2140 MHz (AH202-PCB2140)

Typical RF Performance at 25°C

Frequency	2140 MHz
S21 - Gain	15 dB
S11	- 8 dB
S22	- 13 dB
Output P1dB	+ 29.4 dBm
Output IP3	+ 45.5 dBm
W-CDMA Ch. Power @ -45 dBc ACLR	+ 20.5 dBm
Noise Figure	4.8 dB
Supply Voltage	+11 V
Supply Current	330 mA

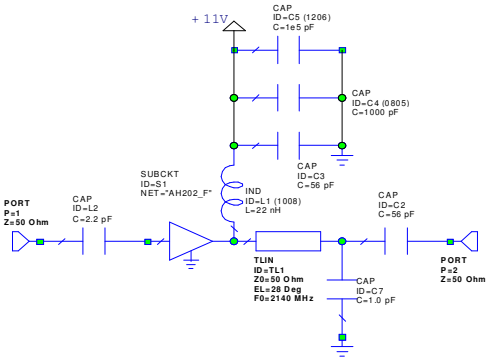

Notes:

1. The amplifier should be connected directly to a +11 V regulator; no dropping resistor is required.
2. If no DC signal is present at the input (pin 1), C1 can be removed. The gate (input pin) is internally grounded in the amplifier.
3. Component sizes are 0603 unless otherwise noted. RF choke L1 should be wirewound ceramic type to insure sufficient current carrying capacity. Coilcraft's 1008 CS series (part # 1008CS-220X_B) is recommended.
4. C7 is located at silk screen marker "6" on the WJ evaluation board.

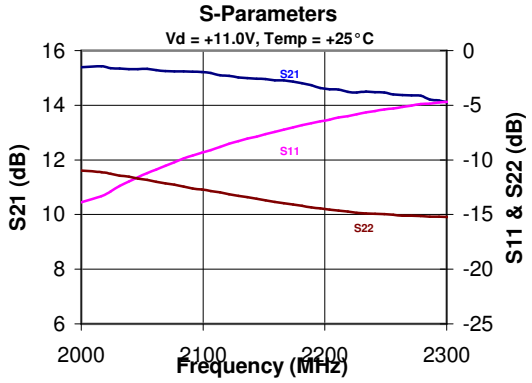

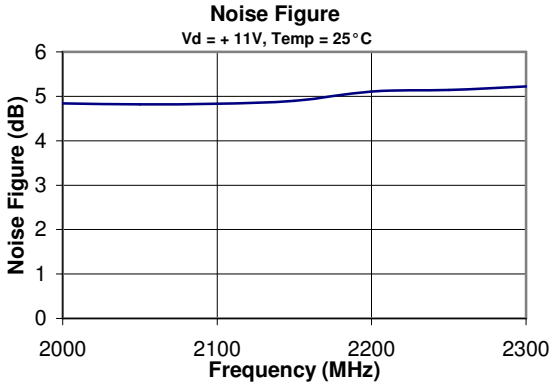

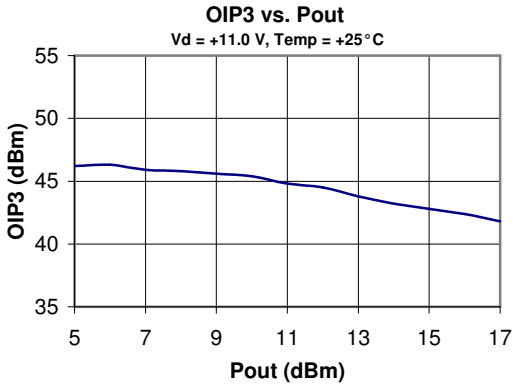

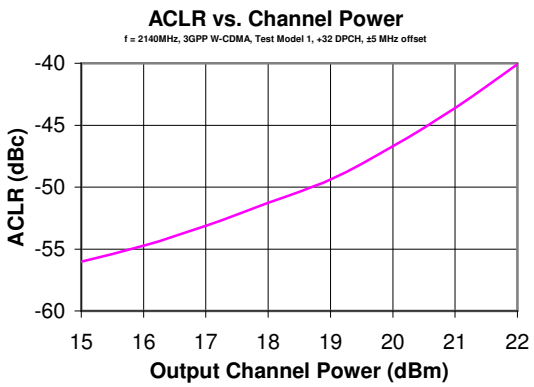

Specifications and information are subject to change without notice

Reference Design: 2140 MHz

using the AH202 in the previously recommended circuit configuration with the AH201 (AH201-PCB2140)

Typical RF Performance at 25°C

Frequency	2140 MHz
S21 - Gain	14.6 dB
S11	-7 dB
S22	- 7 dB
Output P1dB	+ 29.4 dBm
Output IP3	+ 45.5 dBm
W-CDMA Ch. Power @ -45 dBc ACLR	+ 20.5 dBm
Noise Figure	4.2 dB
Supply Voltage	+11 V
Supply Current	330 mA

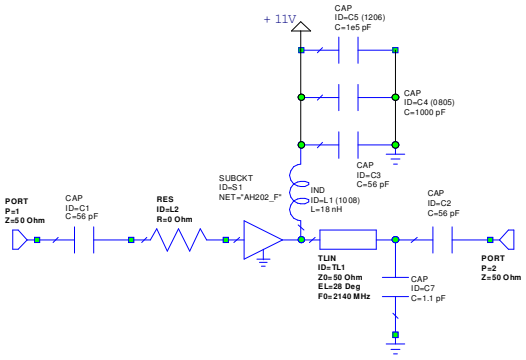

Notes:

1. The amplifier should be connected directly to a +11 V regulator; no dropping resistor is required.
2. If no DC signal is present at the input (pin 1), C1 can be removed. The gate (input pin) is internally grounded in the amplifier.
3. Component sizes are 0603 unless otherwise noted. RF choke L1 should be wirewound ceramic type to insure sufficient current carrying capacity. Coilcraft's 1008 CS series (part # 1008CS-180X_B) is recommended.
4. R = 0 Ω at designator L2 is used as a place holder for a different application circuit. It can be removed from the circuit without any effect to the performance.
5. C7 is located between silk screen markers "5" and "6" on the WJ evaluation board.

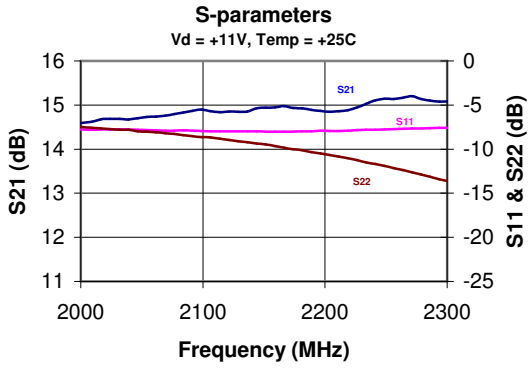

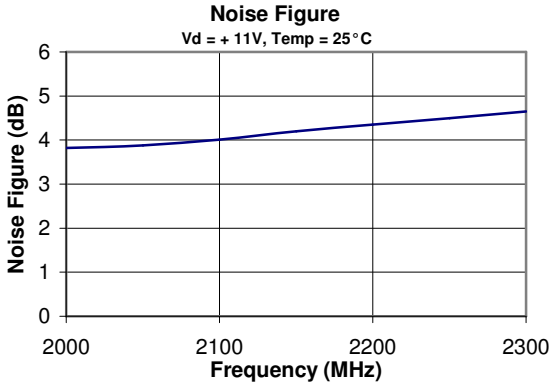

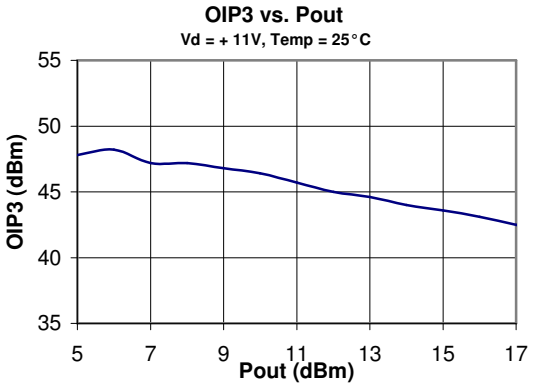

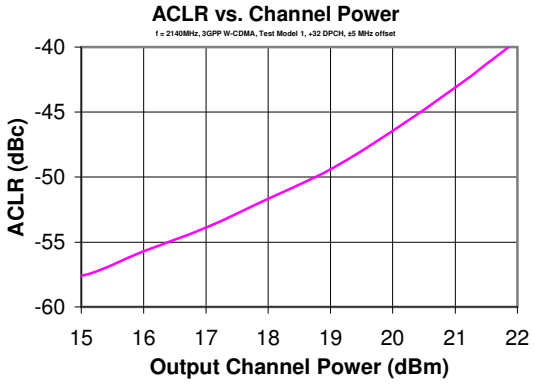

AH202

1W High Linearity Amplifier

Mechanical Information

This package is lead-free/RoHS-compliant. It is compatible with both lead-free (maximum 260°C reflow temperature) and leaded (maximum 245°C reflow temperature) soldering processes. The plating material on the pins is annealed matte tin over copper.

Outline Drawing

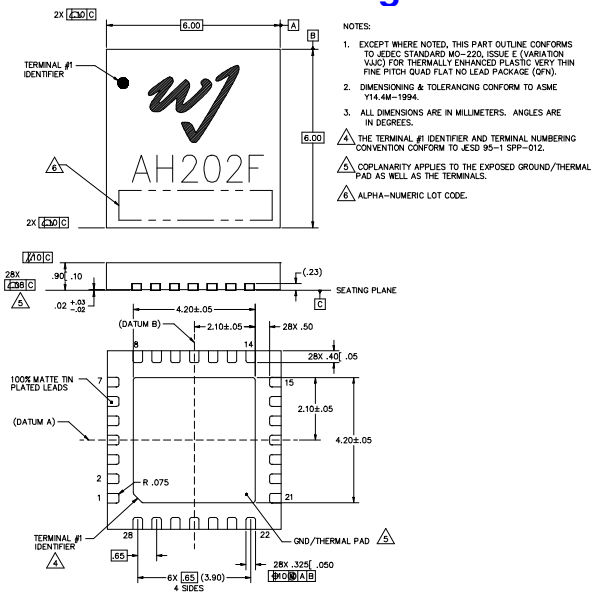

Mounting Configuration / Land Pattern

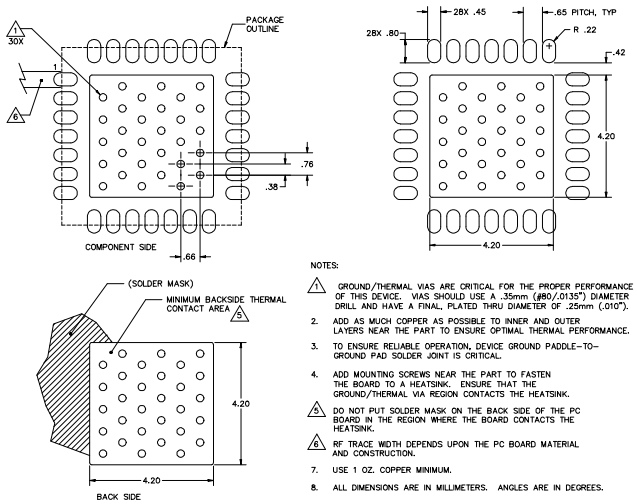

Thermal Specifications

Parameter	Rating
Operating Case Temperature	-40 to +85 °C
Thermal Resistance, Rth (1)	17.5 °C / W
Junction Temperature, Tjc (2)	152 °C

Notes:

1. The amplifier can be operated at 105 °C case temperature for up to 1000 hours over its lifetime with minimal degradation in performance and will not degrade device operation at the recommended maximum 85 °C case temperature for the rest of its lifetime.
2. The thermal resistance is referenced from the hottest part of the junction to the backside copper paddle.
3. This corresponds to the typical biasing condition of +11V, 350 mA at an 85° C case temperature. A minimum MTTF of 1 million hours is achieved for junction temperatures below 160° C.

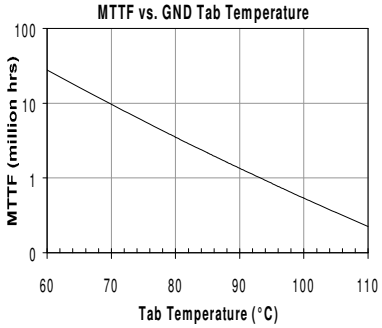

Product Marking

The component will be lasermarked with a "AH202F" product label with an alphanumeric lot code on the top surface of the package.

Tape and reel specifications for this part will be located on the website in the "Application Notes" section.

ESD / MSL Information

Caution! ESD sensitive device.

ESD Rating: Class 1B
Value: Passes between 500 and 1000V
Test: Human Body Model (HBM)
Standard: JEDEC Standard JESD22-A114

ESD Rating: Class III
Value: Passes between 500 and 1000V
Test: Charged Device Model (CDM)
Standard: JEDEC Standard JESD22-C101

MSL Rating: Level 2 at +260 °C convection reflow
Standard: JEDEC Standard J-STD-020

Functional Pin Layout

Pin	FUNCTION	Pin	FUNCTION
1	GND or N/C	15	GND or N/C
2	GND or N/C	16	GND or N/C
3	RF Input	17	GND or N/C
4	GND or N/C	18	GND or N/C
5	GND or N/C	19	RF Output
6	GND or N/C	20	GND or N/C
7	No Connect	21	GND or N/C
8	GND or N/C	22	GND or N/C
9	GND or N/C	23	GND or N/C
10	GND or N/C	24	GND or N/C
11	GND or N/C	25	GND or N/C
12	GND or N/C	26	GND or N/C
13	GND or N/C	27	GND or N/C
14	GND or N/C	28	GND or N/C

Backside paddle is RF and DC ground.
Pin 7 is required to be not connected or grounded for the AH202 to be functional.