I. GENERAL DESCRIPTION

This is a new version of Call Waiting service decoder on the telephone. Call Waiting service works by alerting a customer engaged in a telephone call to a new incoming call. This way the customer can still receive important calls while engaged in a current call. The Call Waiting decoder can detect dual tone (2130Hz and 2750Hz) alert signal and generate a valid signal on the data pins for micro controller.

II. FEATURES

- Compatible with Bellcore special report SR-TSV-002476
- 3.6V ~ 6.0V supply voltage
- Call-Waiting (2130Hz plus 2750Hz) Alert Signal Detector
- Good talkdown and talkoff performance
- Sensitivity compensated by adjusting input OP gain
- Package series --- 14-pin DIP or 16-pin SOP (150 mil)
  AG8889AP for 14-pin DIP
  AG8889N for 16-pin SOP (150 mil)

III. APPLICATION

- Feature phones
- Cordless phones
- Adjunct unit (stand alone)

IV. PIN CONFIGURATION

AG8889AP

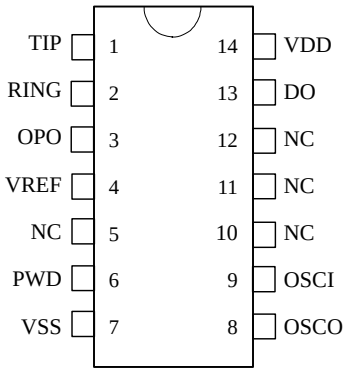

AG8889N

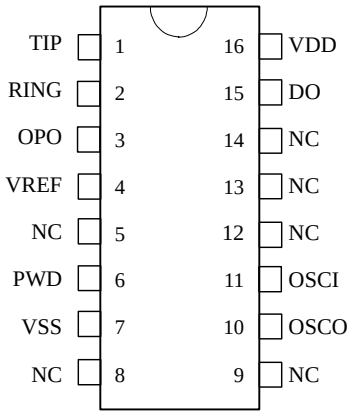

V. FUNCTIONAL BLOCK DIAGRAM

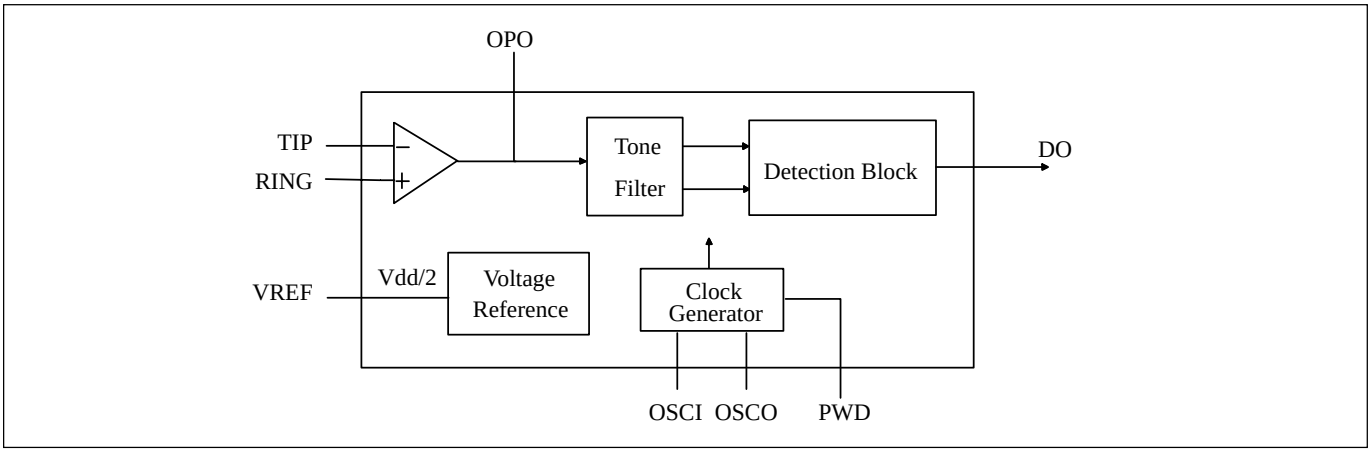

VI. PIN DESCRIPTIONS

Pin	I/O	Description
TIP	I	Tip in should be connected with twisted pair
RING	I	Ring in should be connected with twisted pair
OPO	O	Output of OP Amp
VREF		Reference voltage Vref = 1/2 Vdd
PWD	I	This pin is normal low enabling chip on normal operation and ready to detect CAS tone signals. This active high input sets the chip into power down mode and disable oscillator to save power.
OSCI	I	3.58MHz oscillator in
OSCO	O	3.58MHz oscillator out
DO	O	DO : used as output, this pin determines whether DO signal is valid or not. High is valid. Normal low.
VDD		Power
GND		Ground
NC		Non connected

VII. FUNCTIONAL DESCRIPTIONS

Call Waiting service works by alerting a customer engaged in a telephone call to a new incoming call. This way the customer can still receive important calls while engaged in a current call. The CALL WAITING DECODER can detect CAS(Call-Waiting Alerting Signal 2130Hz plus 2750Hz) and generate a valid signal on the data pin.

The call waiting decoder is designed to support the Caller Number Deliver feature, which is offered by regional Bell Operating Companies. The call waiting decoder has three blocks, including differential amplifier, tone filter detection block In a typical application, this IC receives Tip and Ring signals from twisted pairs. The signals as inputs of differential amplifier, and the differential amplifier sends input signal to a band pass tone filter. Once the signal is filtered, the digital detection block decodes the information. The output data made available at DO pin.

This IC is used for detecting CAS signals. Once the signal is detected, the detection indication is shown on the data output DO pin. The DO pin is normal low. When this IC detects 2130Hz and 2750Hz frequency at the same time, then DO pin goes to high.

DC CHARACTERISTIC

VDD=5V, Vss=0V, Ta=25°C, fOSC=3.58MHz

Sym.	Description	Condition	Min.	Typ.	Max.	Unit
VDD	operating supply voltage		3.6		6	V
IDD	operating supply current			3.3	5	mA
VIL	low level input voltage				1.5	V
VIH	high level input voltage		3.5			V
VOL	low level output voltage	load=1mA		0.4		V
VOH	high level output voltage	load=1mA		4.6		V

Note: 1.both tones in the composite signal have equal amplitude.

2.tone pair is deviated by 0.5%.

3.addes a 0.1uf capacitor between Power and Ground.

AC ELECTRICAL CHARACTERISTIC

(VDD=+5V,Ta=+25°C)

CHARACTERISTIC	Min.	Typ.	Max.	Unit
Input sensitivity TIP and RING pins ,Vdd=+5V, Input G=1		-38		dBm
Input frequency tolerance for 2130Hz		±1.2		%
Input frequency tolerance for 2750Hz		±1.2		%

WAVE FORM TIMING

DO timing:

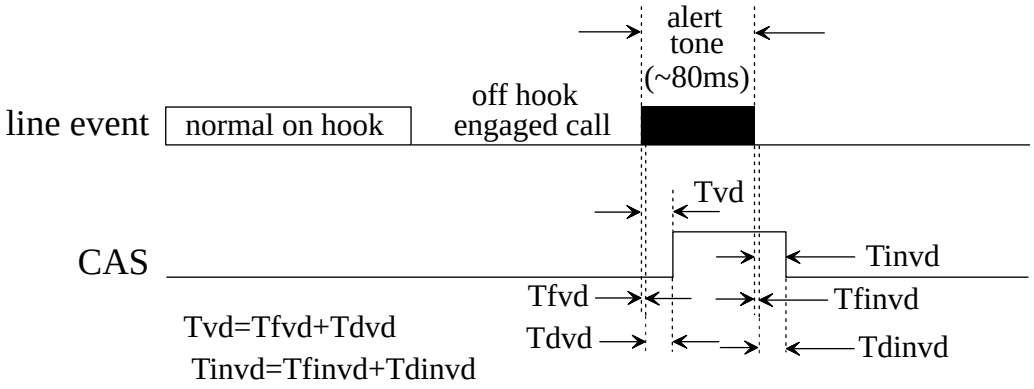

OSC timing:

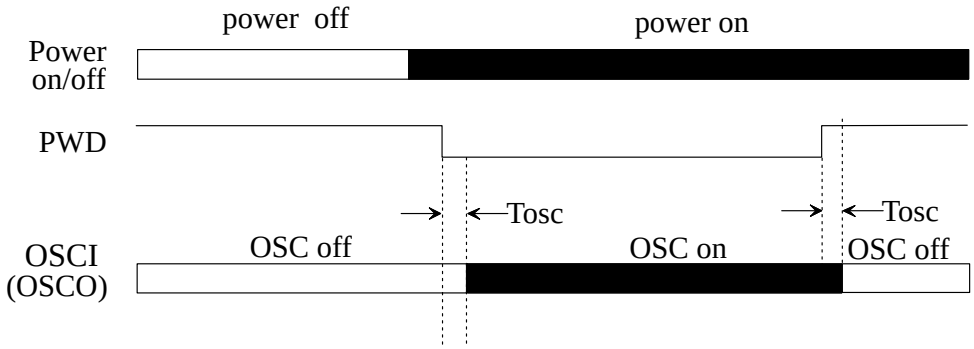

Sym.	Description	Min.	Typ.	Max.	Unit
Tfvd	filter output signal valid delay		6		ms
Tfinvd	filter output signal invalid delay		6		ms
Tdvd	digital delay of valid signal		36		ms
Tdinvd	digital delay of invalid signal		20		ms
Tvd	total delay of valid signal		42		ms
Tinvd	total delay of invalid signal		26		ms
alert tone	input alert tone length (2130 ,2750 Hz @ -20dBm)		80		ms
Tosc	Oscillator enable delay time			10	ms

Note: detected alert tone length shown above is assumed that no speech signals input.
test under alert tone signal = -22dBm (600Ω)

APPLICATION CIRCUIT 1

When PWD pin (pin 6) is controlled by MCU or external hook detect circuit, the users can use the following application. (pin6 is connected to control pin of MCU or hook detect output)

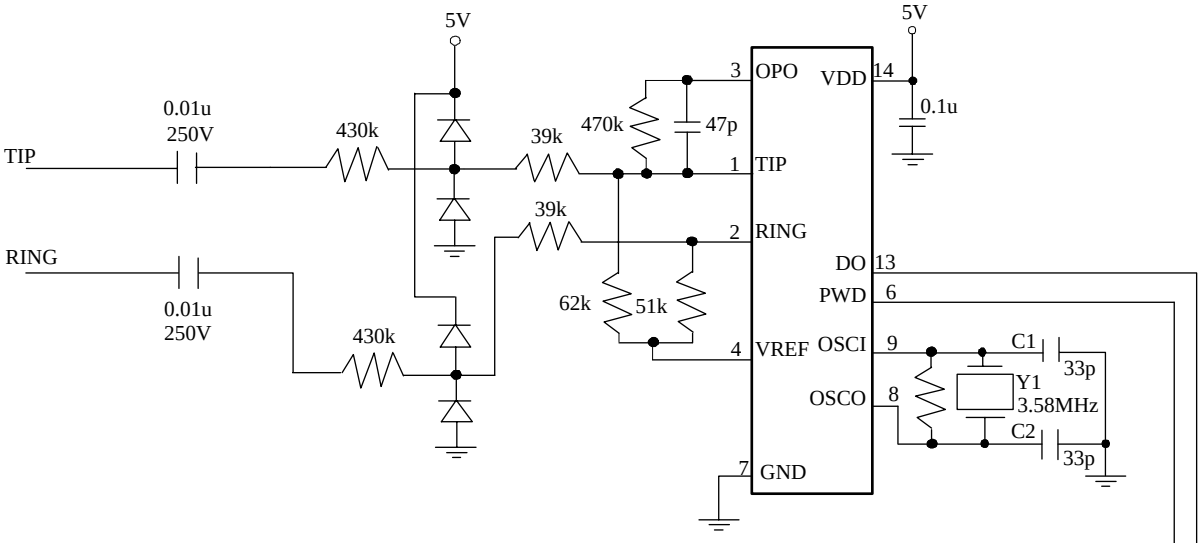

Note :

Y1	KYOCERA KBR-3.58MSB202
C1	33p
C2	33p

KBR-3.58MSB202 tolerrance :
-0.10% ~+0.15%

8-bit
MCU

APPLICATION CIRCUIT 2

In some application, the call waiting decoder is always powered on , the PWD pin (pin 6) can not be directly connected to the ground, the users have to use the following application. (pin6 is connected with a capacitor to VDD and connected with a resistor to the ground).

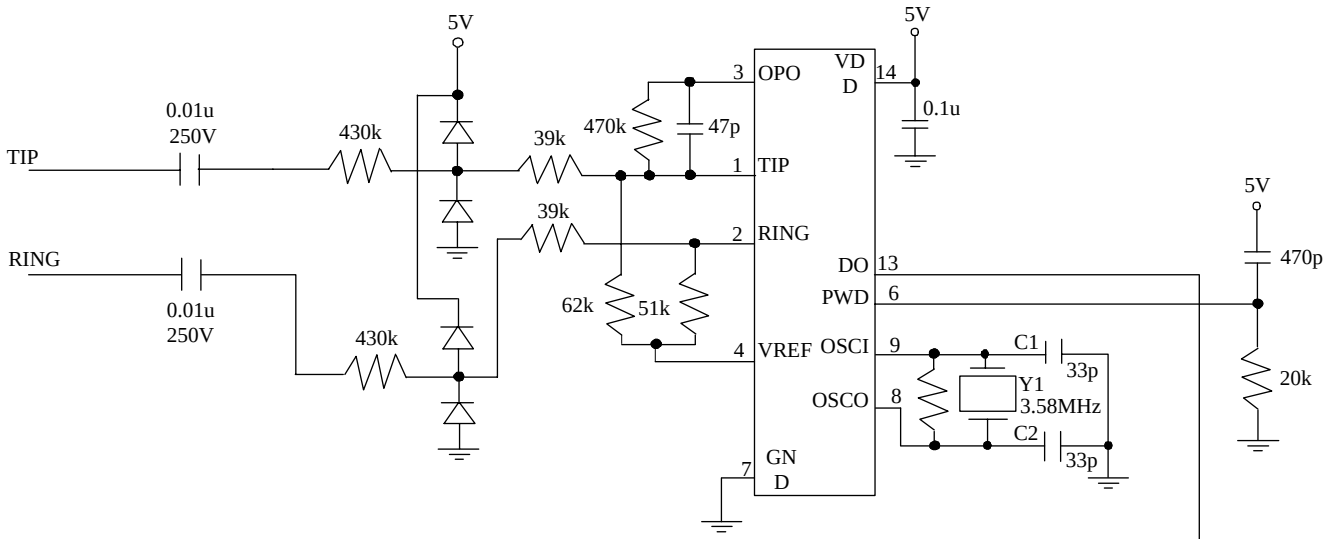

Note :

Y1	KYOCERA KBR-3.58MSB202
C1	33p
C2	33p

KBR-3.58MSB202 tolerrance :
-0.10% ~+0.15%

APPLICATION NOTE

1. **VDD, GND**
   To reduce noise effects, separate the analog and digital systems close to the device. For both the digital and analog VDD pins, use a ceramic capacitor of about 0.1uF set as close as possible to the pin to bypass to the respective GND's.

2. **PWD pin**
   By connecting PWD pin to GND, normal mode is obtained. In the normal mode, the oscillator is activated then ready to decode CAS signal and the chip consumes operating current. By connecting PWD pin to VDD, the chip is on power down mode and the chip consumes just stand-by current.

3. **OPO pin**
   This pin is the gain adjustment of internal OP Amp.

4. **XIN, XOUT pins**
   If the resonator is used, two capacitors about 33pF and 1M(resistor have to be connected for frequency accuracy.