AFS14 series SAW Filter Evaluation Board

AFS1410-Eval

Moisture Sensitivity Level – N/A | **RoHS/RoHS II compliant**



26.7 x 42.8 mm

DESCRIPTION:

AFS14 Evaluation boards are designed to provide a means to assess the performance of AFS14 series of SAW Band Pass Filters. The board is designed with a provision for matching components on both input and output ports of the filter.

To complete the electrical path, resistors R1 & R2 are in-circuit with 0Ω value. The land pattern for C1 C2, C3 & C4, along with the land pattern for R1 & R2 can be used to create a matching circuit using a combination of inductors and capacitors as desired.

By default, the AFS14 series of SAW Band Pass Filters are designed into a matched impedance of 50Ω's, so these evaluation boards can be used as received. Simply solder down the AFS14 series of filter on the provided land pattern, and connect the Input and Output ports, using SMA to BNC or SMA to N-Type connectors to a Network Analyzer.

OPTIONS AND PART IDENTIFICATION

AFS1410-EVAL

OUTLINE DIMENSIONS

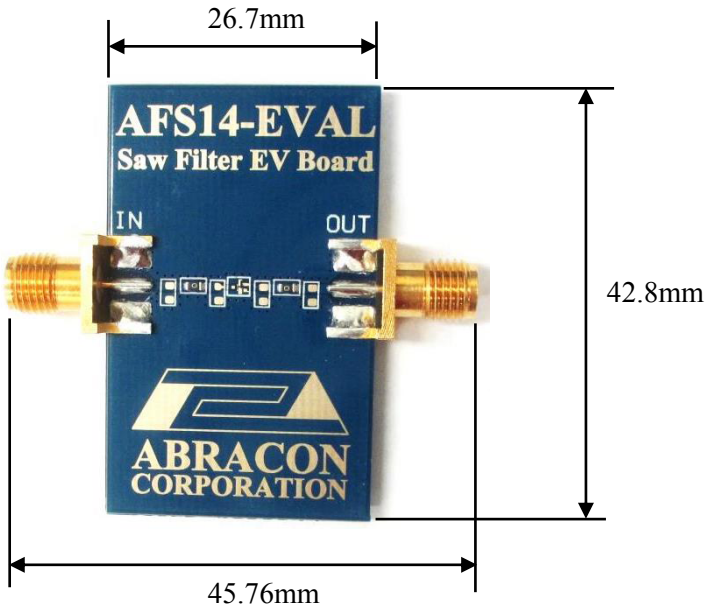

AFS14 series SAW Filter Evaluation Board

AFS1410-Eval

RoHS/RoHS II compliant



26.7 x 42.8 mm

SCHEMATIC

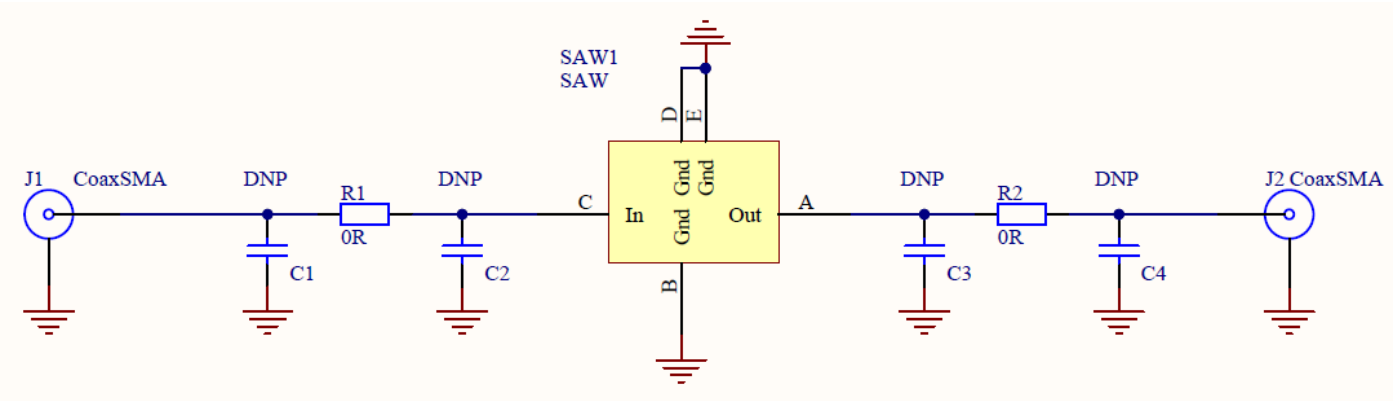

LAYOUT

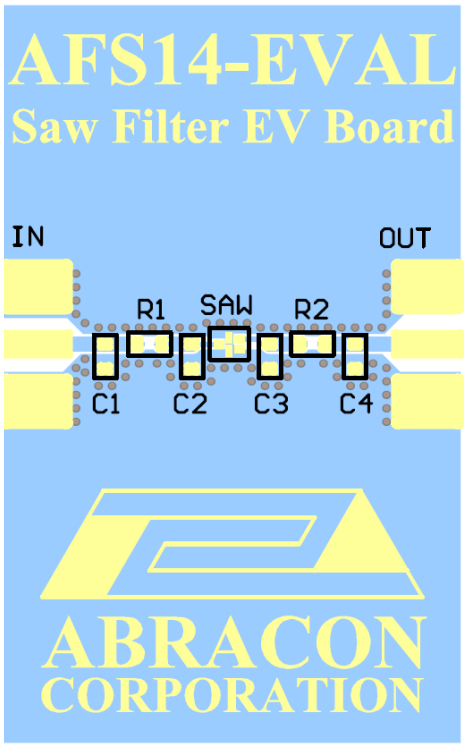

ATTENTION: Abracon Corporation's products are COTS – Commercial-Off-The-Shelf products; suitable for Commercial, Industrial and, where designated, Automotive Applications. Abracon's products are not specifically designed for Military, Aviation, Aerospace, Life-dependant Medical applications or any application requiring high reliability where component failure could result in loss of life and/or property. For applications requiring high reliability and/or presenting an extreme operating environment, written consent and authorization from Abracon Corporation is required. Please contact Abracon Corporation for more information.