AFP-6123

12.1” Stainless Fanless Touch Panel Computer With Intel® Atom™ D2550 Onboard, 2G RAM



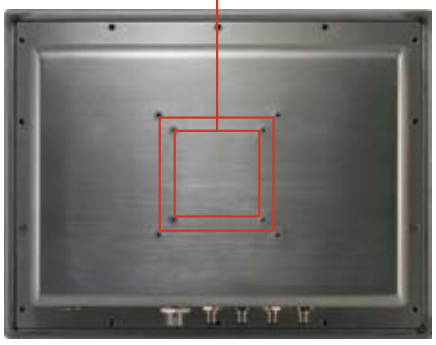



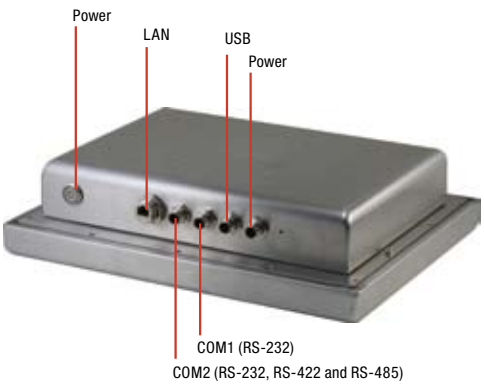

Features

- 12.1” XGA (1024 x 768) TFT LCD Display
- Intel® Atom™ D2550 Processor, Fanless Operation
- IP66/NEMA4x-Compliant Stainless Type 316L System
- Wide Operation Temperature : -20°C ~ 50°C
- Anti-Scratch Touch Screen: 7H
- Power Input Protection:
  Over-Voltage Protection
  Low-Voltage Protection
  Reverse Protection

1000 Gigo LAN USB 2.0 CE FC

Specifications

System	
Processor	Intel® Dual Core Atom™ D2550 CPU onboard
Memory	DDR3 SODIMM x 1 up to 4GB (Wide-Temp. and Factory- Installed)
LCD/CRT Controller	Integrated in Processor
Ethernet	10/100/1000Base-TX x 1
I/O Port	M12 x 1 for USB 2.0 x 2 M12 x 1 for RS-232 x 1 M12 x 1 for RS-232/422/485 x 1 M12 x 1 for LAN x 1, Power input x 1
Storage Disk Drive	2.5” SATA Hard Disk Driver x 1/ CompactFlash™ Slot x 1 (Internal) (Wide-Temp. and Factory- Installed)
Expansion Slot	Mini-card x 1
OS support	Window® XP, Window® 7, Linux Fedora
Mechanical	
Construction	IP66 / NEMA4x for stainless front bezel & stainless chassis
Mounting	VESA 75/100
Dimension	370 x 285 x 87 mm (14.6” x 11.2” x 3.42”)
Carton Dimension	510 x 460 x 210 mm (20”x 18.1” x 8.26”)
Gross Weight	15.2 lb (6.93 Kg)
Net Weight	18.1 lb (8.2 Kg)
Environmental	
Operating Temperature	-4°F ~122°F (-20°C~50°C) Ambient without Airflow -4°F ~ 130°F (-20°C~55°C) Ambient with Airflow
Storage Temperature	-4°F ~158°F (-20°C~70°C)
Storage Humidity	10%~95% @40°C, non-condensing
Vibration	1g rms/ 5~500Hz/ Random operation (HDD)
Shock	15 G peak acceleration (11 msec. Duration)
EMC	CE/FCC Class A
Power Supply	
DC input	9~30V DC input -Over-voltage protection -Low-voltage protection -Reverse protection
LCD	
Display type	12.1" TFT-LCD
Max Resolution	1024 x 768
Max. Colors	262k colors
Luminance	500
Viewing Angle	160°(H)/140°(V)
Back Light	LED
Back Light MTBF (hours)	50,000
Touchscreen	
Type	5-wire resistive, anti-scratch 7H
Light Transmission	80%
Lifetime (Times)	35,000

AAEON® an ASUS assoc. co.

Note: All specifications are subject to change without notice.

AFP-6123

Dimension

Unit: mm

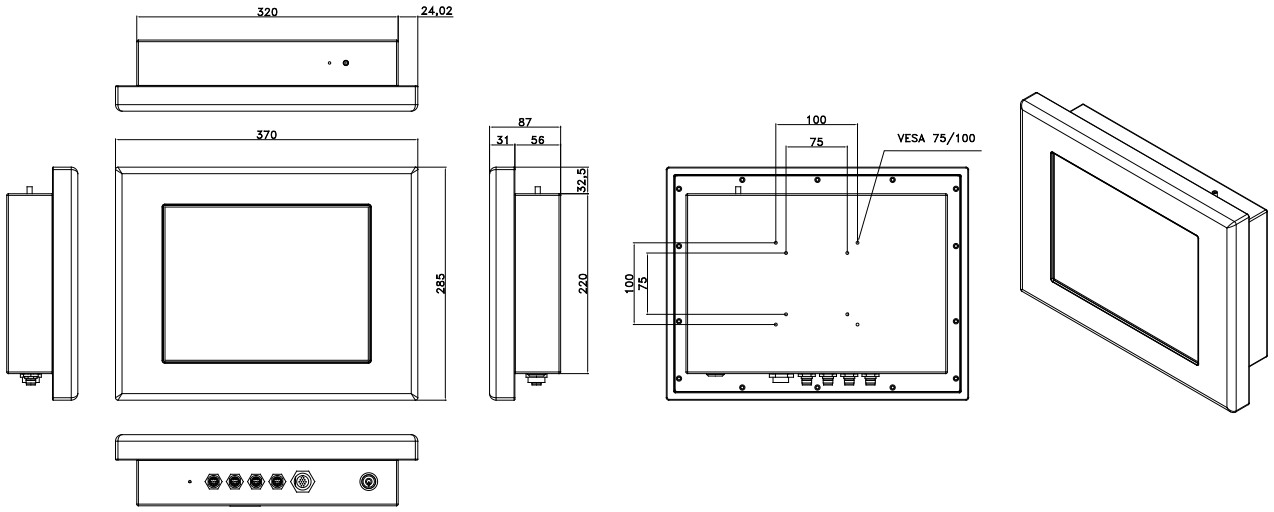

Ordering Information

- **AFP-6123HTT-A1-1010**
  12.1" Stainless Fanless Touch Panel Computer With Intel® Atom™ D2550 Onboard, 2G RAM

Optional Accessories

- **9761215300**
  Wireless LAN Kit. IEEE 802.11b/g/n, Bluetooth 3.0 w/ Cable & Antenna
- **9761215301**
  USB GPS Kit
- **9761215302**
  3G & GPS Kit
- **1757910004**
  AC Adapter (100W)
- **1702031802**
  AC Adapter Cord (US Type)
- **1702031803**
  AC Adapter Cord (European Type)
- **170203180E**
  AC Adapter Cord (Japanese Type)

Accessories In Packing

- **1700090208**
  COM (D-Sub) Cable with Waterproof M12 Connector
- **1709080251**
  Two USB Y Cables with Waterproof M12 Connector
- **M990FOX001**
  3-pin Waterproof Cap Connector for DC-in or Audio Line-out Port
- **P990FOX001**
  Waterproof Cap Connector for LAN Port of FOX Series (RJ-45 Compliance)