AFEM-S257

2.5-2.7 GHz WiMAX Coexistence Front End Module

Data Sheet

Description

Avago Technologies AFEM-S257 WiMAX Coexistence Front End Module (FEM) is designed for mobile and fixed wireless data applications in the 2.5 to 2.7 GHz frequency range. The FEM is optimized for IEEE 802.16 WiMAX modulation. AFEM-S257 exhibits flat gain and good match while providing linear power efficiency to meet stringent mask conditions and supports two antenna connections for RX diversity or two simultaneous RX signals.

This module utilizes Avago Technologies proprietary GaAs pHEMT, and FBAR technology for superior performance across voltage and temperature levels while providing excellent out of band rejection. AFEM-S257 is in a 5x7x1 mm MCOB package for space-constrained applications.

Functional Block Diagram

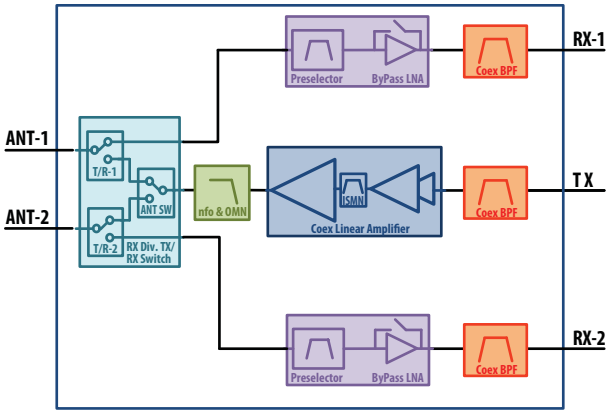

Features

- GaAs E-pHEMT, pHEMT and FBAR technology
- 50 Ω all RF ports
- Typical Size: 5 x 7 x 1 mm
- 3 to 5 V supply (Tx Path)
- Meets 802.16 masks at 24 dBm Pout , 16 QAM WiMAX with 3.6 V and 420 mA
- 16 QAM WiMAX EVM -34 dB (2.5%) at 24 dBm
- TX gain of 34 dB
- PAE of 18% at SEM compliant Pout = 24 dBm
- 23 dB TX gain step in low power mode with reduced Idsq
- Low power Idd, 95 mA at Pout = 0 dBm, 23 dB Gain Step
- 35 dBc rejection at WiFi ISM band
- 3.5 dB Noise Figure from ANT to RX
- 25 dB of TX/RX Isolation
- 25 dB of Rx1/Rx2 Isolation

Applications

- Portable and fixed WiMAX applications

Package Diagram

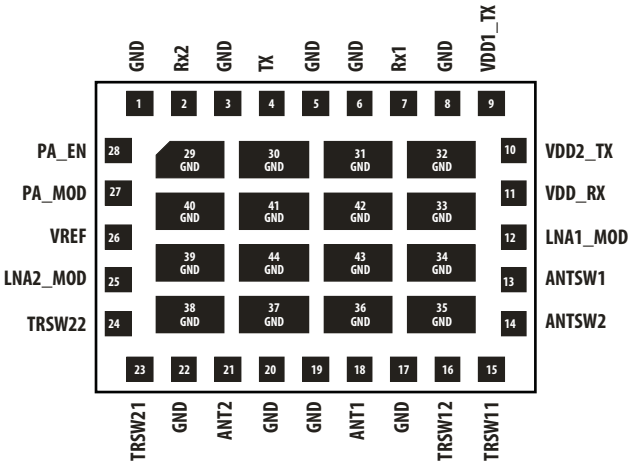

TOP VIEW

Electrical Specifications

Absolute Minimum and Maximum Ratings

Table 1. Minimum and Maximum Ratings

Parameter		Specifications			
Description	**Pin**	**Min.**	**Max.**	**Unit**	**Comments**
Supply Voltage	VDD1_TX	2.9	5.5	V	
Supply Voltage	VDD2_TX	2.9	5.5	V	
Supply Voltage	VDD_RX	2.7	5.5	V	
LNA1 High/Low Gain	LNA1_MODE	0	3.3	V	
LNA2 High/Low Gain	LNA2_MODE	0	3.3	V	
PA Bias Control	VREF		5.5	V	
PA Mode Control	PA_MODE	1.65	5.5	V	
PA Enable	PA_EN	1.65	5.5	V	
Switch Select ANT1	ANTSW1	0	4.8	V	
Switch Select ANT2	ANTSW2	0	4.8	V	
Switch Select RX1	TRSW11	0	4.8	V	
Switch Select TX1	TRSW12	0	4.8	V	
Switch Select RX2	TRSW21	0	4.8	V	
Switch Select TX2	TRSW22	0	4.8	V	
RF Input	TX		15	dBm	Using 16 QAM 3/4
RF Output	ANT1		25	dBm	Using 16 QAM 3/4
RF Output	ANT2		25	dBm	Using 16 QAM 3/4
Ch. 1 Receiver Output	RX1		10	dBm	
Ch. 2 Receiver Output	RX2		10	dBm	
Channel Temperature			150	°C	
Storage Temperature		-65	150	°C	

Table 2. Recommended Operating Range

Parameter		Specifications				
Description	**Pin**	**Min.**	**Typical**	**Max.**	**Unit**	**Comments**
Supply Voltage	VDD1_TX	3	3.6	5	V	
			80		mA	Pout = 24 dBm
Supply Voltage	VDD2_TX	3	3.6	5	V	
			340		mA	Pout = 24 dBm
Supply Voltage	VDD_RX	2.7	3.3	5	V	
				35	mA	
LNA1,2 Low/High Gain	LNA1_MODE LNA2_MODE	2.7	3.0		V	Logic High
			0		V	Logic Low
			2		µA	
		10K	20K		Ω	Input Impedance
VREF Control	VREF	2.75	2.8	2.85	V	
			1		mA	
PA Mode, PA_Enable Control	PA_MODE PA_EN	1.65	3.0	3.6	V	Logic High
				0.2	V	Logic Low
				25	µA	
Switch Select ANT1,2	ANTSW1 ANTSW2	2.7	3.0		V	Logic High
			0		V	Logic Low
			2		µA	
				1	µs	Switch time
		10K	20K		Ω	Input Impedance
Switch Select RX1,TX1	TRSW11 TRSW12 TRSW21 TRSW22	2.7	3.0		V	Logic High
			0		V	Logic Low
			2		uA	
				1	us	Switch time
		10K	20K		Ω	Input Impedance
Frequency Range		2.5		2.7	GHz	
Thermal Resistance, $\theta_{ch\text{-}b}$			22.6		°C/W	Channel to board (Tx Only)
Thermal Resistance, $\theta_{ch\text{-}b}$			48.1		°C/W	Channel to board (Rx Only)
Ambient Temperature		-40		+85	°C	

All data measured on an FR4 demo board at VDD1_TX = VDD2_TX = 3.6 V, VREF = 2.8 V, Tc = 25° C, 50 Ω at all ports. Unless otherwise specified, all data is taken with OFDM 16-QAM ¾ convolutional coding modulated signal per IEEE 802.16e with 10 MHz BW.

Table 3. TX-ANT Electrical Characteristics (25° C, 3.6 V and 50 Ω)

		Performance				
Parameter		**Min.**	**Typical**	**Max.**	**Unit**	**Comments**
Input Return Loss		6	10		dB	
Gain Flatness			1		dB	Over any 10 MHz
Gain Variation (V_{CC})		-1		1	dB	3 V to 5 V
High Power Mode	EVM		-34	-30	dB	Vcc = 3.6 V & Po = 24 dBm
	SEM-A @ 5.05 MHz		-16	-13	dBm/100 kHz	IBW = 100 kHz
	SEM-B @ 6.5 MHz		-18	-13	dBm/MHz	IBW = 1 MHz
	SEM-C @ 10.5 MHz		-24	-19		
	SEM-D @ 11.5 MHz		-27	-25		
	SEM-E @ 15.5 MHz		-33	-29.5		
	SEM-F @ 20.5 MHz		-40	-37		
	Pout (SEM Compliant)	+24			dBm	WiMAX Forum
	Total DC Current		420	475	mA	Pout = 24 dBm
	Gain	29	34	36.5	dB	
Low Power Mode	EVM		-37	-30	dB	Pout = 0 dBm
	Gain Step	19	23	26	dB	
	Total DC Current		95	115	mA	Pout = 0 dBm
2fo @ 24 dBm Pout			-33		dBm/MHz	
3fo @ 24 dBm Pout			-32		dBm/MHz	
Settling Time		0.2	0.5		µS	
TX leakage current			5	30	µA	Max defined at +85° C
Output Load Mismatch Ruggednes				8:1	VSWR	No permanent degradation or damage at all phase angles
TX Path Out of Band Rejection						
698 – 720 MHz			80		dBc	
800 – 915 MHz			70		dBc	
1574 – 1576 MHz			50		dBc	
1805 – 1880 MHz			40		dBc	
1930 – 1990 MHz			30		dBc	
2110 – 2170 MHz			10		dBc	
2400 – 2468 MHz			35		dBc	
2451 – 2473 MHz			25		dBc	
3300 – 3800 MHz			30		dBc	
5000 – 5380 MHz			60		dBc	
>7200 MHz			60		dBc	
TX Noise Power (24 dBm Output Power)						
900 MHz			-147		dBm/Hz	
1575 MHz			-148		dBm/Hz	
1800 MHz			-148		dBm/Hz	
1990 MHz			-148		dBm/Hz	
2470 MHz			-135		dBm/Hz	
2473 MHz			-134		dBm/Hz	
2481 MHz			-124		dBm/Hz	

ANT1 – RX1 and ANT2 – RX2 Electrical Characteristics

Table 4. Electrical Characteristics (25° C, 3.3 V and 50 Ω)

		Performance				
Parameter		**Min.**	**Typical**	**Max.**	**Unit**	**Comments**
Input Return Loss		10	12		dB	
Gain Ripple			0.5		dB	Over any 10 MHz
LNA Gain	LNA Gain		15		dB	
High Gain Mode	Total DC Current per Receiver		10	15	mA	
	RX Gain	6	10	13.5	dB	ANT to RX
	Input P1dB	-3	0		dBm	CW Single Tone
	Noise Figure		3.5	4.6	dB	
By-pass Mode	Total DC Current per Receiver		0.25	0.5	mA	
	RX Gain		-10		dB	ANT to RX
	Input P1dB		14		dBm	CW Single Tone
Rx1 to Rx2 Isolation			25		dB	
Tx/RX-1 and TX/RX2 Isolation		25			dB	Switch Isolation
Tx/Rx Isolation			25		dB	TX to any RX path isolation
Turn On Time				2	µS	
Rx leakage current			1	10	µA	Max defined at +85° C
RX Path Out of Band Rejection						
698 – 720 MHz			70		dBc	
800 – 915 MHz			70		dBc	
1574 – 1576 MHz			35		dBc	
1805 – 1880 MHz			30		dBc	
1930 – 1990 MHz			30		dBc	
2110 – 2170 MHz			35		dBc	
2400 – 2468 MHz			30		dBc	
2451 – 2473 MHz			30		dBc	
3300 – 3800 MHz			30		dBc	

Table 5. Logic Table

	PA_EN	LNA1_ MODE	LNA2_ MODE	PA_ MODE	ANTSW1	ANTSW2	TRSW12	TRSW11	TRSW22	TRSW21	DIAGRAM
TX ANT1 LPM	H	L	L	L	H	L	H	L	H	L	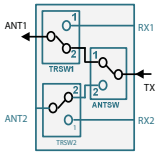
TX ANT1 HPM	H	L	L	H	H	L	H	L	H	L	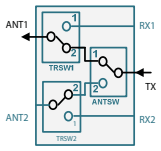
TX ANT2 LPM	H	L	L	L	L	H	H	L	H	L	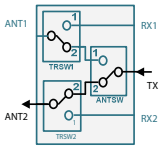
TX ANT2 HPM	H	L	L	H	L	H	H	L	H	L	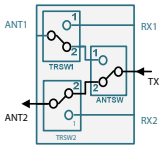
RX1_ANT1_Hi_Gain RX2_ANT2_Lo_Gain	L	H	L	L	X	X	L	H	L	H	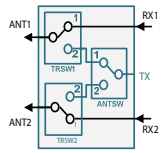
RX1_ANT1_Lo_Gain RX2_ANT2_Lo_Gain	L	L	L	L	X	X	L	H	L	H	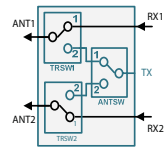
RX2_ANT2_Hi_Gain RX1_ANT1_Lo_Gain	L	L	H	L	X	X	L	H	L	H	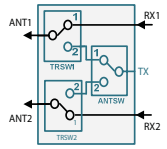
RX1_ANT1_Hi_Gain RX2_ANT2_Hi_Gain	L	H	H	L	X	X	L	H	L	H	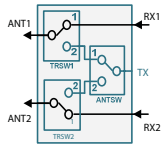
FEM Shutdown (1)	L	L	L	L	L	L	L	L	L	L	VREF = 0

Notes:
1. VREF is High for all modes except in shutdown mode. In shutdown mode VREF = 0 V.

Evaluation Board Description

Table 6. Pin Description:

Top Pin No.	Function	Bottom Pin No.	Function
1	VDD2_TX	2	VDD2_Sense
3	VDD_RX	4	GND
5	VDD1_TX	6	GND
7	ANTSW1	8	GND
9	PAMODE	10	TRSW11
11	TRSW12	12	TRSW21
13	TRSW22	14	PA_EN
15	VREF	16	GND
17	LNA1_MODE	18	GND
19	LNA2_MODE	20	ANTSW2

Recommended turn on sequence

- Apply VDD1_TX and VDD2_TX
- Apply VDD_RX
- Apply VREF
- Apply TRSW11,12,21 and 22
- Apply ANTSW1 and ANTSW2
- Apply PA_EN
- For TX HPM Apply PAMOD HI
- For TX LPM Apply PAMOD LO
- For RX HG Apply LNA1,2 Mode HI
- For RX LG Apply LNA1,2 Mode LO
- Apply RF Input not to exceed 10 dBm

Turn off in reverse order

Table 7. TX Typical Test Conditions:

TX → ANT1				
PIN	**HPM**		**LPM**	**Function**
VDD1,2_TX	3.6 V		3.6 V	Battery
PA_MODE	3.0 V		0 V	Low Power Mode
VREF	2.8 V		2.8 V	Bias Control
PA_EN	3.0 V		3.0 V	PA Enable
ANTSW1,2	H		L	ANT Select
TRSW12,11,22,21	H	L	H L	RX/TX Select

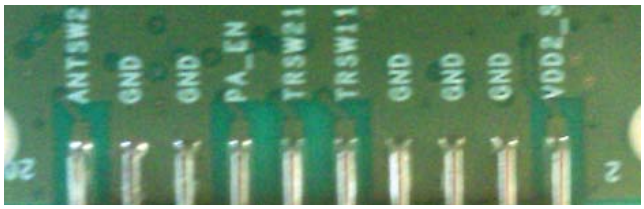

Figure 1. Pins on back of Demoboard

Table 8. RX Typical Test Conditions:

ANT1 → RX1 ANT2 → RX2				
PIN	**HG**		**LG**	**Function**
VDD_RX	3.3 V		3.3 V	Battery
LNA1_MODE	3.0 V		0 V	LNA1 Control
LNA2_MODE	3.0 V		0 V	LNA2 Control
VREF	2.8 V		2.8 V	Bias Control
ANTSW1,2	X		X	ANT Select
TRSW12,11,22,21	L	H	L H	RX/TX Select

Notes:
VDD1_TX, VDD2_TX can be tied together to reduce supply voltages, but VREF needs to be a regulated voltage which is optimized for 2.8 V at VDD of 3.6 V.
PA_EN and PAMODE are CMOS compatible pin; however, this can be driven with 3 V0 for logic high.
Use jumpers on eval board to set control signal for desired mode of operation.

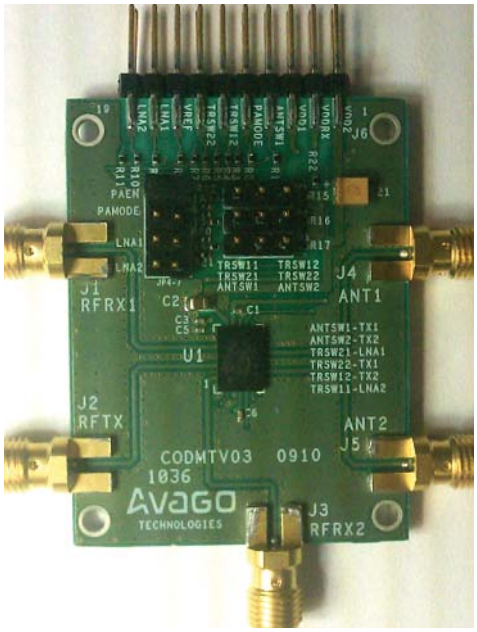

Figure 2. Front of Demoboard

Table 9. Eval Board Configuration:

Jumper	Position		Function
PA_EN	■	■	PA_Enable
PA_MODE	■	■	High Power Mode
LNA1MODE	■	■	LNA1 = High Gain
LNA2MODE	○	○	LNA2 = Low Gain

Note: There is no shutdown mode for LNA only low gain mode.

TX to ANT1

Jumper	Position			Jumper	
TRSW11	○	■	■	TRSW12	TX Path
TRSW21	○	■	■	TRSW22	TX Path
ANTSW1	■	■	○	ANTSW2	ANT1

TX to ANT2

Jumper	Position			Jumper	
TRSW11	○	■	■	TRSW12	TX Path
TRSW21	○	■	■	TRSW22	TX Path
ANTSW1	○	■	■	ANTSW2	ANT2

ANT1 to RX1 & ANT2 to RX2

Jumper	Position			Jumper	
TRSW11	■	■	○	TRSW12	RX1
TRSW21	■	■	○	TRSW22	RX2
ANTSW1	○	○	○	ANTSW2	

Application Circuit AFEM-S257

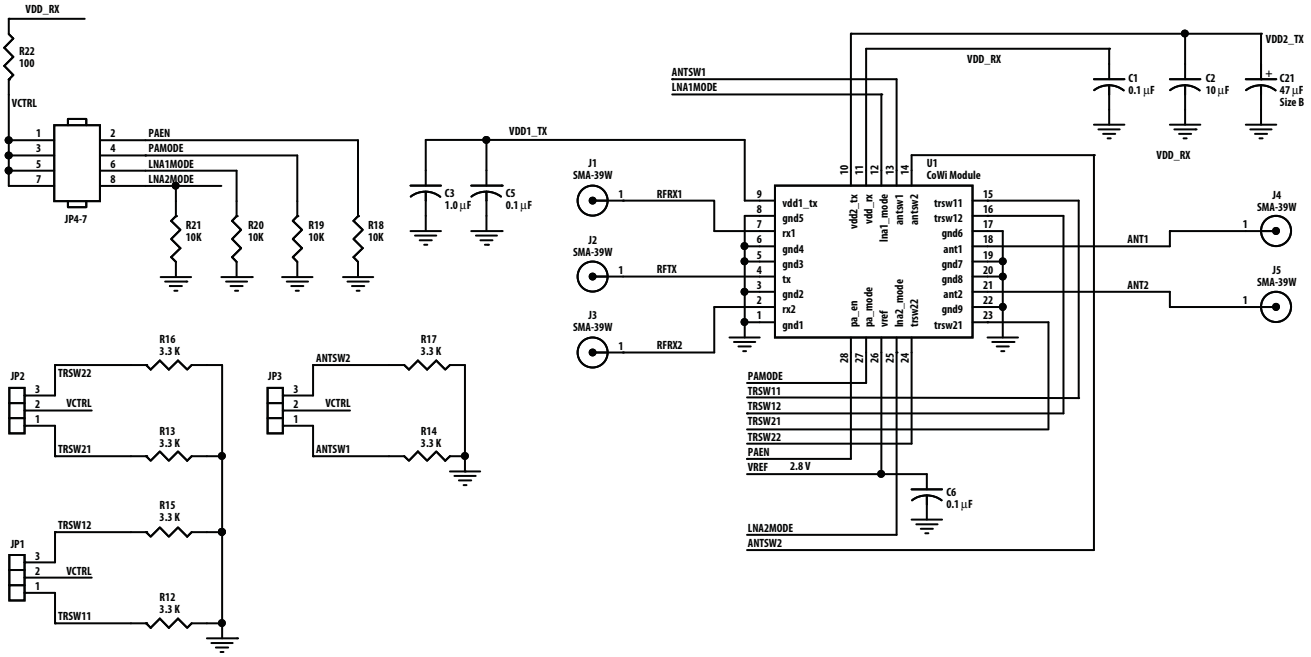

Figure 3. Demoboard Schematic

Land Pattern

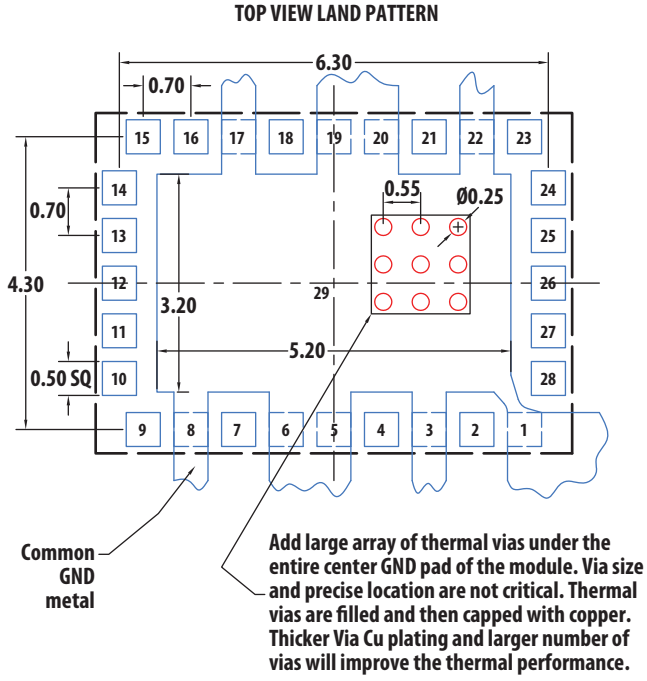

Figure 4. Recommended footprint

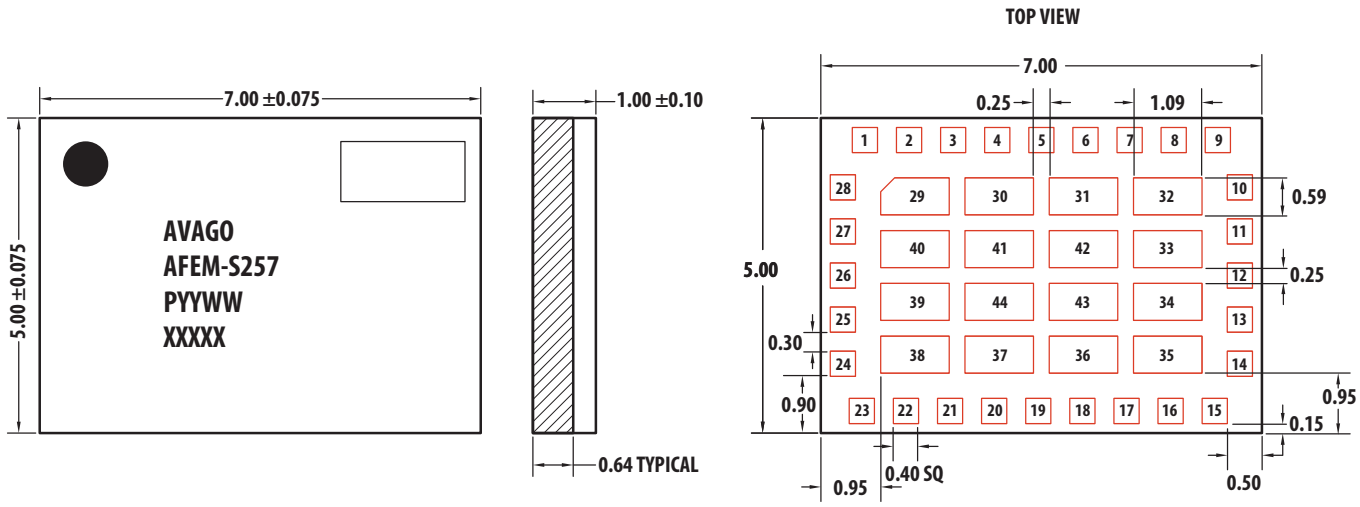

P : Manufacturing Site Code
YYWW : Build Work Year and Work Week
XXXX : Production Lot Code

Note: There is no Solder Mask at the bottom layer.
There is an oxide layer surrounding the GND and IO pads.
The overlap is 50 µm. The oxide thickness ia negligible (1 µm) and should not be factored in the contactor design.

Figure 5. Package dimensions

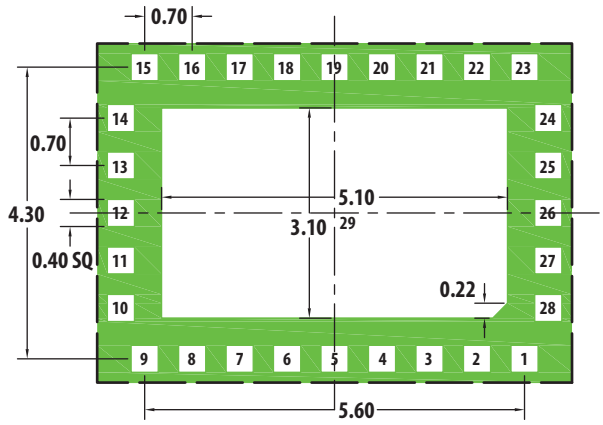

TOP VIEW SOLDERMASK

Figure 6. Recommended Soldermask

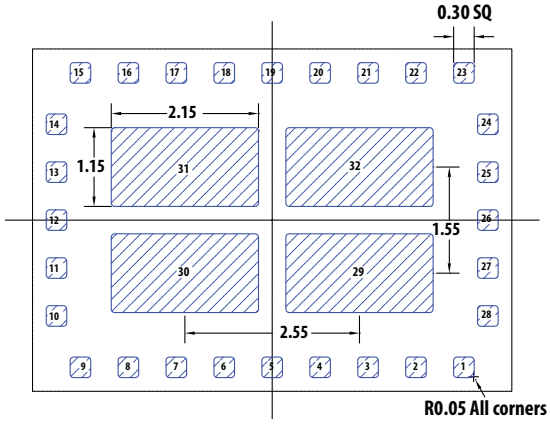

RECOMMENDED STENCIL THICKNESS = 4 mils,
Stainless Steel, Laser Cut

Typical phone board IO pad construction
Pad is mask defined
Metal pad 0.5mm SQ
Mask opening 0.4mm SQ
Solder paste stencil 0.3mm SQ with rounded corners.

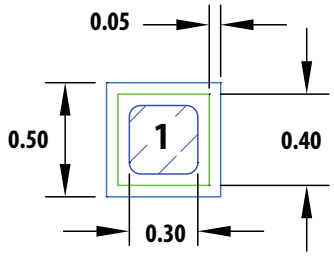

Figure 7. Recommended Stencil

Handling and Storage

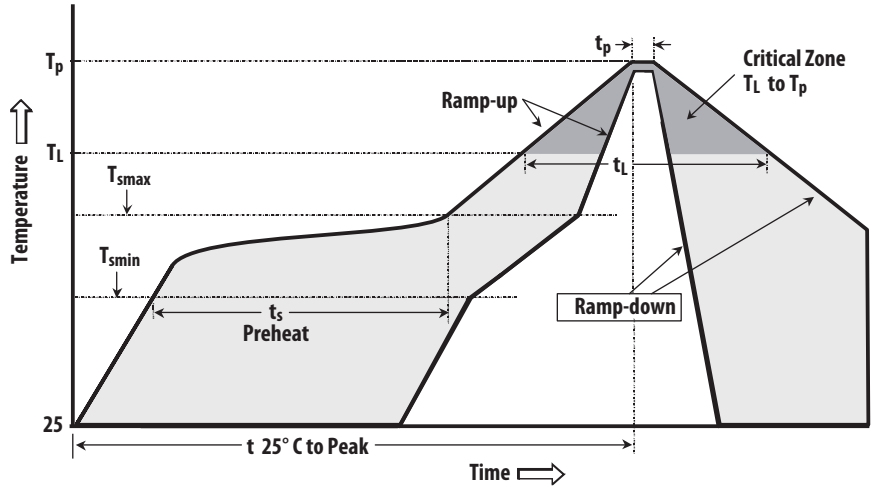

Typical SMT Reflow Profile for Maximum Temperature = 260 +0/-5° C

Profile Feature	Sn-Pb Solder	Pb-Free Solder
Average ramp-up rate (TL to TP)	3°C/sec max	3°C/sec max
Preheat		
– Temperature Min (Tsmin)	100° C	150° C
– Temperature Max (Tsmax)	150° C	200° C
– Time (min to max) (ts)	60-120 sec	60-180 sec
Tsmax to TL		
– Ramp-up Rate		3°C/sec max
Time maintained above:		
– Temperature (TL)	183° C	217° C
– Time (TL)	60-150 sec	60-150 sec
Peak temperature (Tp)	240 +0/-5° C	260 +0/-5° C
Time within 5° C of actual Peak Temperature (Tp)	10-30 sec	10-30 sec
Ramp-down Rate	6°C/sec max	6°C/sec max
Time 25° C to Peak Temperature	6 min max.	8 min max.

Device Orientation

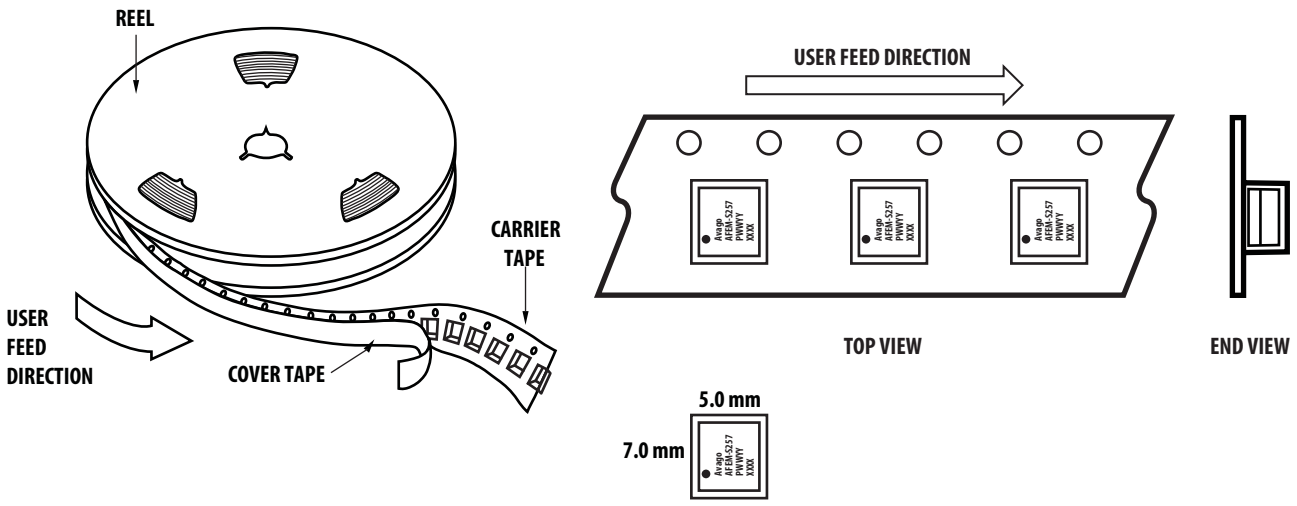

Tape Dimensions

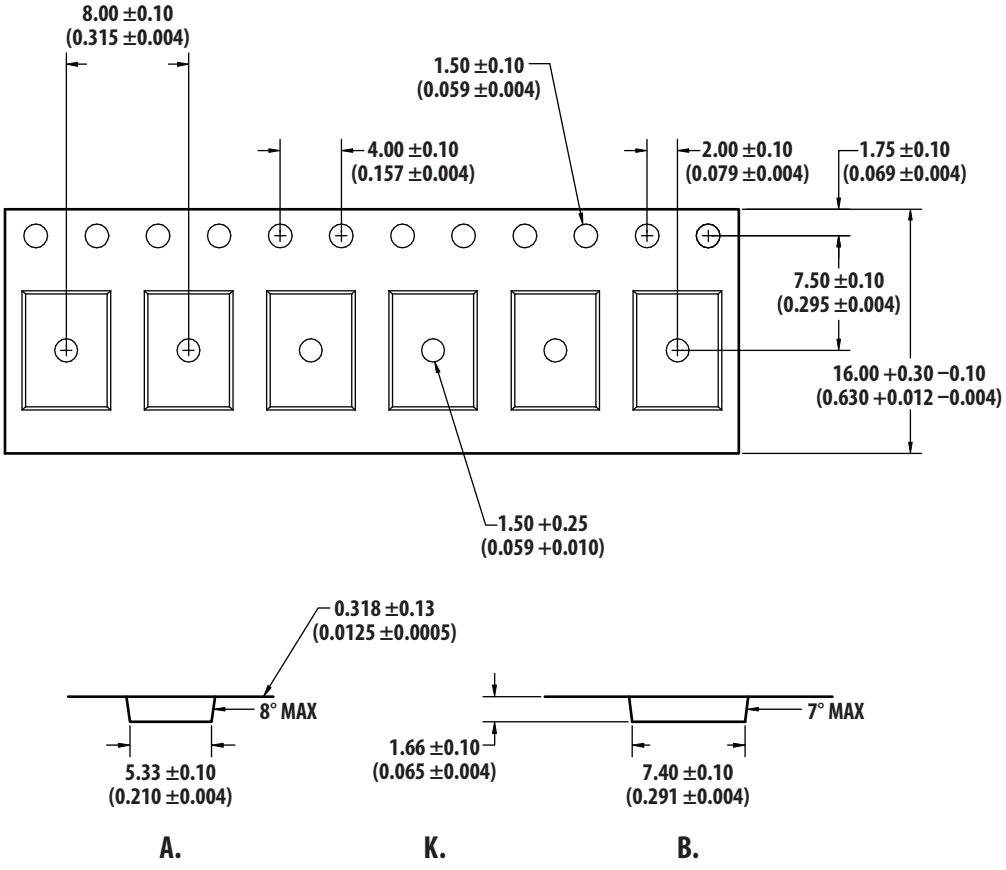

Reel Information

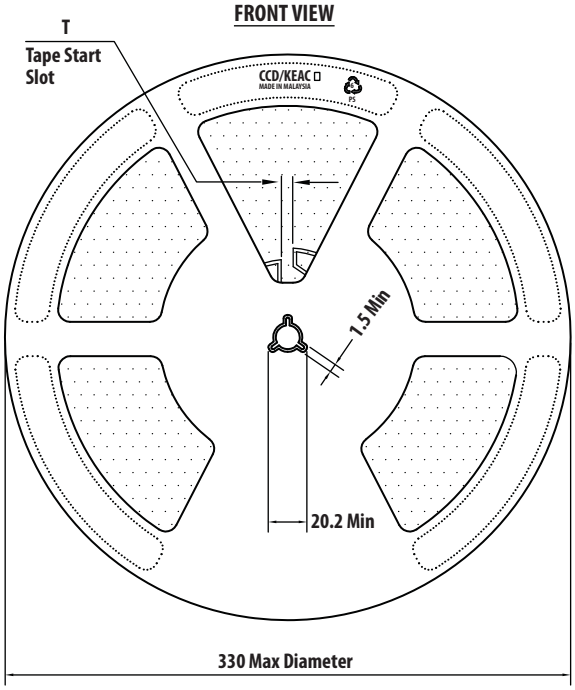

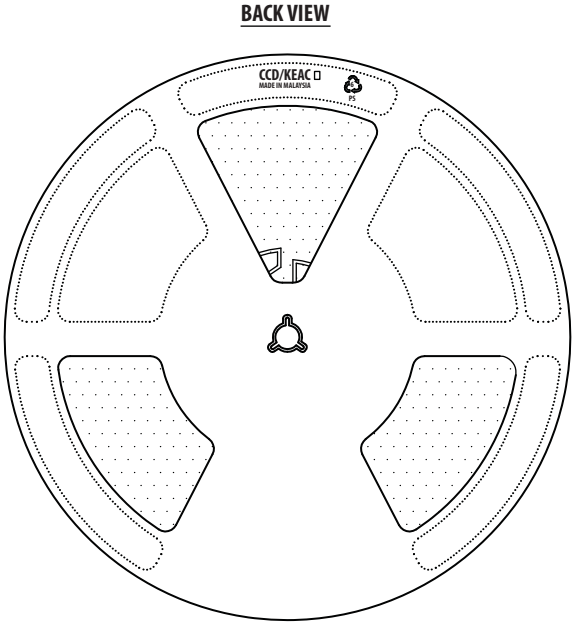

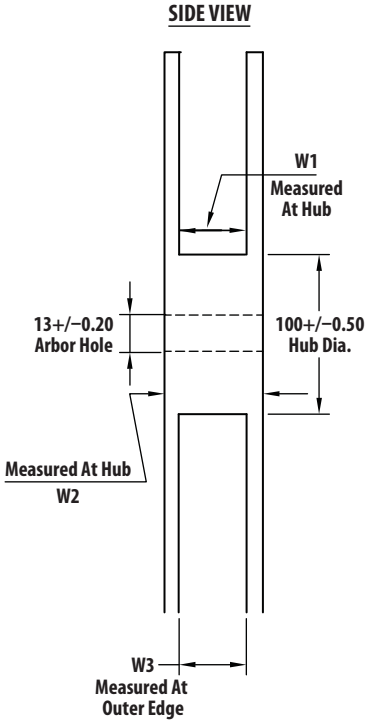

TAPE WIDTH	T	W1	W2	W3
16 mm	7 ±0.50	$16.4^{+2.0}_{-0.0}$	22.4 Max	15.9 Min 19.4 Max

AFEM-S257 Part Number Ordering Information

Part Number	Devices Per Container	Container
AFEM-S257-BLKG	100	Antistatic bag
AFEM-S257-TR1G	1000	13″ Reel
AFEM-S257-TR2G	3000	13″ Reel

For product information and a complete list of distributors, please go to our web site: **www.avagotech.com**

Avago, Avago Technologies, and the A logo are trademarks of Avago Technologies in the United States and other countries.
Data subject to change. Copyright © 2005-2011 Avago Technologies. All rights reserved.
AV02-2970EN - July 19, 2011