# AFE58JD18 16-Channel, Ultrasound AFE with 14-Bit, 65-MSPS or 12-Bit, 80-MSPS ADC, Passive CW Mixer, I/Q Demodulator, and LVDS, JESD204B Outputs

## 1 Features

- 16-Channel, Complete Analog Front-End (AFE):
  - LNA, VCAT, PGA, LPF, ADC, and CW Mixer
- LNA with Programmable Gain:
  - Gain: 24 dB, 18 dB, and 12 dB
  - Linear Input Range: 0.25 $V_{PP}$, 0.5 $V_{PP}$, and 1 $V_{PP}$
  - Input-Referred Noise: 0.63 nV/√Hz, 0.7 nV/√Hz, and 0.9 nV/√Hz
  - Programmable Active Termination
- Voltage-Controlled Attenuator (VCAT): 40 dB
- Programmable Gain Amplifier (PGA): 24 dB and 30 dB
- Total Signal Chain Gain: 54 dB (max)
- 3rd-Order, Linear-Phase LPF:
  - 10 MHz, 15 MHz, 20 MHz, 30 MHz, 35 MHz, and 50 MHz
- Analog-to-Digital Converter (ADC):
  - 14-Bit ADC: 75-dBFS SNR at 65 MSPS
  - 12-Bit ADC: 72-dBFS SNR at 80 MSPS
- LVDS Interface Maximum Speed of 1 Gbps
- Noise and Power Optimizations (Full-Channel):
  - 140 mW/Ch at 0.75 nV/√Hz, 65 MSPS
  - 91.5 mW/Ch at 1.1 nV/√Hz, 40 MSPS
  - 80 mW/Ch at CW Mode
- Excellent Device-to-Device Gain Matching:
  - ±0.5 dB (typical) and ±1.1 dB (max)
- Low Harmonic Distortion
- Fast and Consistent Overload Recovery
- Passive Mixer for CWD:
  - Low Close-In Phase Noise: –156 dBc/Hz at 1 kHz Off 2.5-MHz Carrier
  - Phase Resolution: λ / 16
  - Supports 16X, 8X, 4X, and 1X CW Clocks
  - CWD High-Pass Filter Rejects Undesired Low-Frequency Signals < 1 kHz
- Digital Features:
  - Digital I/Q Demodulator after ADC:
    - Fractional Decimation Filter M = 1 to 63 with 0.25X Increment Step
    - Data Throughput Reduction After Decimation
    - On-Chip RAM with 32 Preset Profiles
- 5-Gbps JESD Interface:
  - JESD204B Subclass 0, 1, and 2
  - 2, 4, or 8 Channels per JESD Lane
- Small Package: 15-mm × 15-mm NFBGA-289

## 2 Applications

- Medical Ultrasound Imaging
- Nondestructive Evaluation Equipment
- Sonar Imaging Equipment

## 3 Description

The AFE58JD18 is a highly-integrated, analog front-end (AFE) solutions specifically designed for ultrasound systems where high performance and small size are required.

To request a full datasheet or other design resources: request AFE58JD18

**Device Information(1)**

| PART NUMBER | OUTPUT INTERFACE | DIGITAL I/Q DEMODULATOR |
|---|---|---|
| AFE58JD18 | LVDS and JESD | Supported |

(1) For all available packages, see the orderable addendum at the end of the datasheet.

**Simplified Block Diagram**

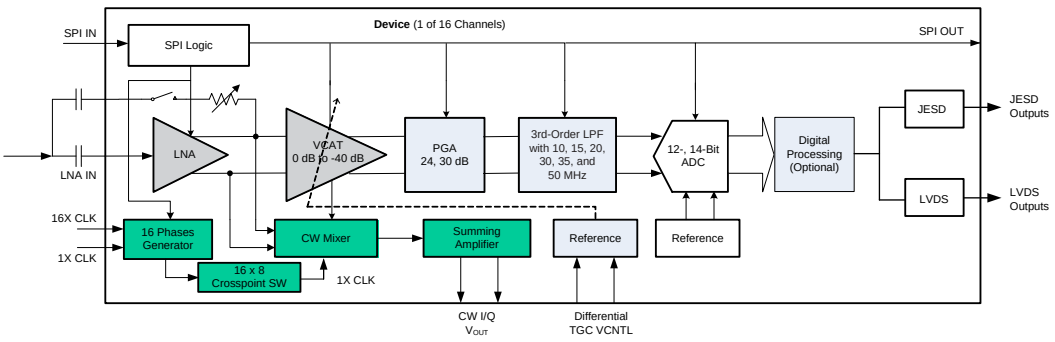


An IMPORTANT NOTICE at the end of this data sheet addresses availability, warranty, changes, use in safety-critical applications, intellectual property matters and other important disclaimers. PRODUCTION DATA.

# Table of Contents

**1 Features** ..... 1
**2 Applications** ..... 1
**3 Description** ..... 1
**4 Revision History** ..... 2
**5 Description (continued)** ..... 3
**6 Functional Block Diagram** ..... 4
**7 Device and Documentation Support** ..... 5
7.1 Documentation Support ..... 5
7.2 Trademarks ..... 6
7.3 Electrostatic Discharge Caution ..... 6
7.4 Export Control Notice ..... 6
7.5 Glossary ..... 6
**8 Mechanical, Packaging, and Orderable Information** ..... 6
8.1 Tray Information ..... 7

## 4 Revision History

NOTE: Page numbers for previous revisions may differ from page numbers in the current version.

| Changes from Original (August 2015) to Revision A | Page |
|---|---|
| • Added link to request full data sheet | 1 |


Copyright © 2015–2016, Texas Instruments Incorporated

## 5 Description (continued)

The AFE58JD18 has a total of 16 channels, with each channel consisting of a voltage-controlled amplifier (VCA), a simultaneous sampling 14-bit and 12-bit analog-to-digital converter (ADC), and a continuous wave (CW) mixer. The VCA includes a low-noise amplifier (LNA), a voltage-controlled attenuator (VCAT), a programmable gain amplifier (PGA), and a low-pass filter (LPF). LNA gain is programmable and supports 250-$mV_{PP}$ to 1-$V_{PP}$ input signals and programmable active termination. The ultra-low noise VCAT provides an attenuation control range of 40 dB and improves overall low-gain SNR, which benefits harmonic and near-field imaging. The PGA provides gain options of 24 dB and 30 dB. In front of the ADC, an LPF can be configured at 10 MHz, 15 MHz, 20 MHz, 30 MHz, 35 MHz, or 50 MHz to support ultrasound applications with different frequencies.

The AFE58JD18 also integrates a low-power passive mixer and a low-noise summing amplifier to create an on-chip CWD beamformer. 16 selectable phase delays can be applied to each analog input signal. Furthermore, a unique third- and fifth-order harmonic suppression filter is implemented to enhance CW sensitivity

The high-performance, 14-bit ADC achieves 75-dBFS SNR. This ADC ensures excellent SNR at low-chain gain. The device can operate at maximum speeds of 65 MSPS and 80 MSPS, providing a 14-bit and a 12-bit output, respectively.

The ADC low-voltage differential signaling (LVDS) outputs enable a flexible system integration that is desirable for miniaturized systems.

The AFE58JD18 additionally includes an optional digital demodulator and JESD204B data packing blocks after the 12- or 14-bit ADC. The digital in-phase and quadrature (I/Q) demodulator with programmable fractional decimation filters accelerates computationally-intensive algorithms at low power. A JESD204B interface that runs up to 5 Gbps further reduces the circuit board routing challenges in high-channel count systems.

The AFE58JD18 also allows various power and noise combinations to be selected to optimize system performance. Therefore, the AFE58JD18 is a suitable ultrasound AFE solution for both high-end and portable systems.

The AFE58JD18 is available in a 15-mm × 15-mm NFBGA-289 package (ZBV package, S-PBGA-N289) and is specified for operation from –40°C to 85°C. The device pinout is also similar to the AFE5816 device family.

Copyright © 2015–2016, Texas Instruments Incorporated

# 6 Functional Block Diagram

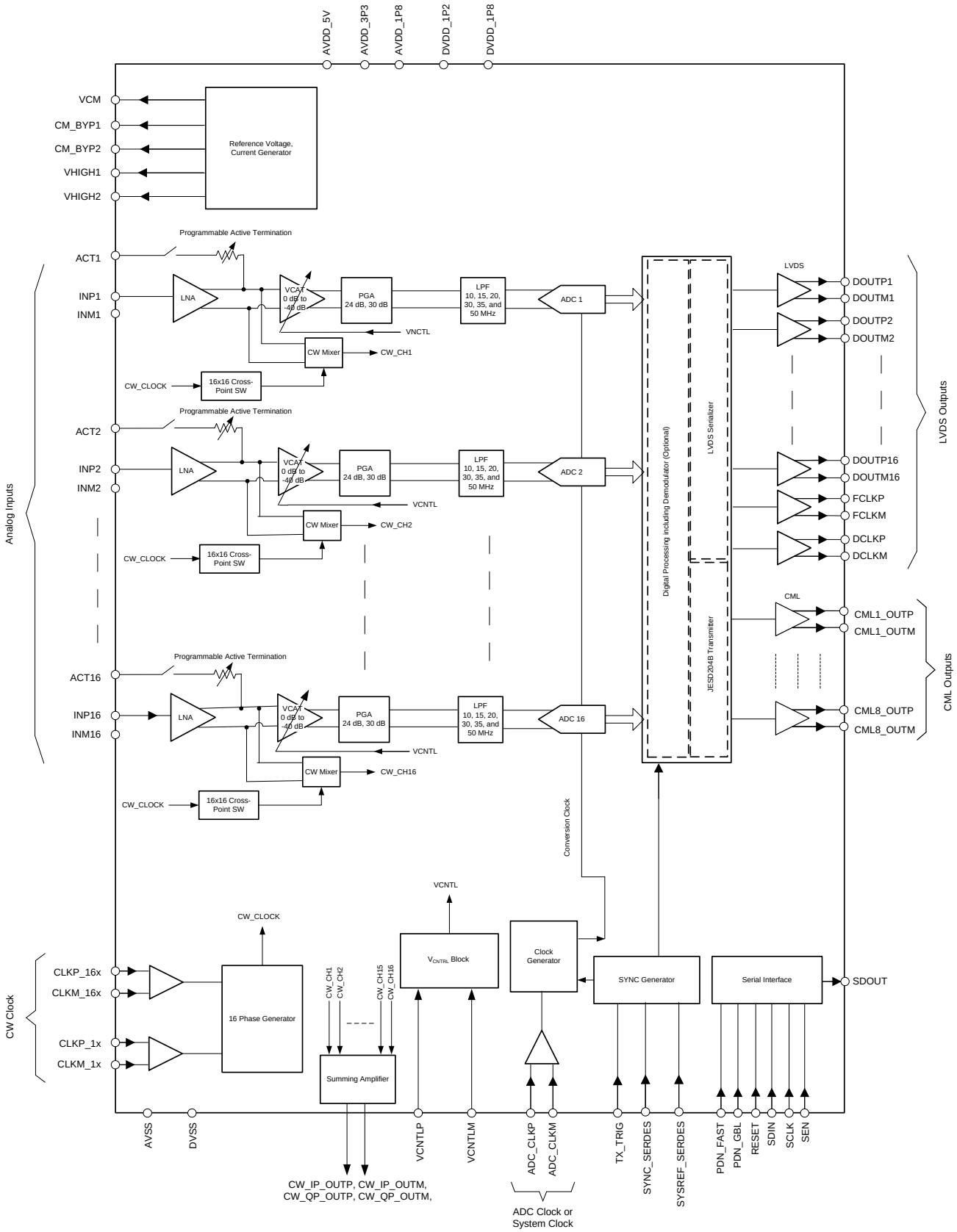



Copyright © 2015–2016, Texas Instruments Incorporated

# 7 Device and Documentation Support

## 7.1 Documentation Support

### 7.1.1 Related Documentation

AFE5816 Data Sheet, SBAS688

*MicroStar BGA Packaging Reference Guide,* SSYZ015

*Clocking High-Speed Data Converters,* SLYT075

*Design for a Wideband Differential Transimpedance DAC Output,* SBAA150

TI Active Filter Design Tool, WEBENCH® Filter Designer

CDCM7005 Data Sheet, SCAS793

CDCE72010 Data Sheet, SCAS858

TLV5626 Data Sheet, SLAS236

DAC7821 Data Sheet, SBAS365

THS413x Data Sheet, SLOS318

OPA1632 Data Sheet, SBOS286

LMK048x Data Sheet, SNAS489

OPA2211 Data Sheet, SBOS377

ADS8413 Data Sheet, SLAS490

ADS8472 Data Sheet, SLAS514

ADS8881 Data Sheet, SBAS547

SN74AUP1T04 Data Sheet, SCES800

UCC28250 Data Sheet,SLUSA29

ISO7240 Data Sheet, SLLS868

Copyright © 2015–2016, Texas Instruments Incorporated

### 7.2 Trademarks

All trademarks are the property of their respective owners.

### 7.3 Electrostatic Discharge Caution



These devices have limited built-in ESD protection. The leads should be shorted together or the device placed in conductive foam during storage or handling to prevent electrostatic damage to the MOS gates.

### 7.4 Export Control Notice

Recipient agrees to not knowingly export or re-export, directly or indirectly, any product or technical data (as defined by the U.S., EU, and other Export Administration Regulations) including software, or any controlled product restricted by other applicable national regulations, received from disclosing party under nondisclosure obligations (if any), or any direct product of such technology, to any destination to which such export or re-export is restricted or prohibited by U.S. or other applicable laws, without obtaining prior authorization from U.S. Department of Commerce and other competent Government authorities to the extent required by those laws.

### 7.5 Glossary

SLYZ022 — *TI Glossary*.

This glossary lists and explains terms, acronyms, and definitions.

## 8 Mechanical, Packaging, and Orderable Information

The following pages include mechanical, packaging, and orderable information. This information is the most current data available for the designated devices. This data is subject to change without notice and revision of this document. For browser-based versions of this data sheet, refer to the left-hand navigation.


Copyright © 2015–2016, Texas Instruments Incorporated

## 8.1 Tray Information

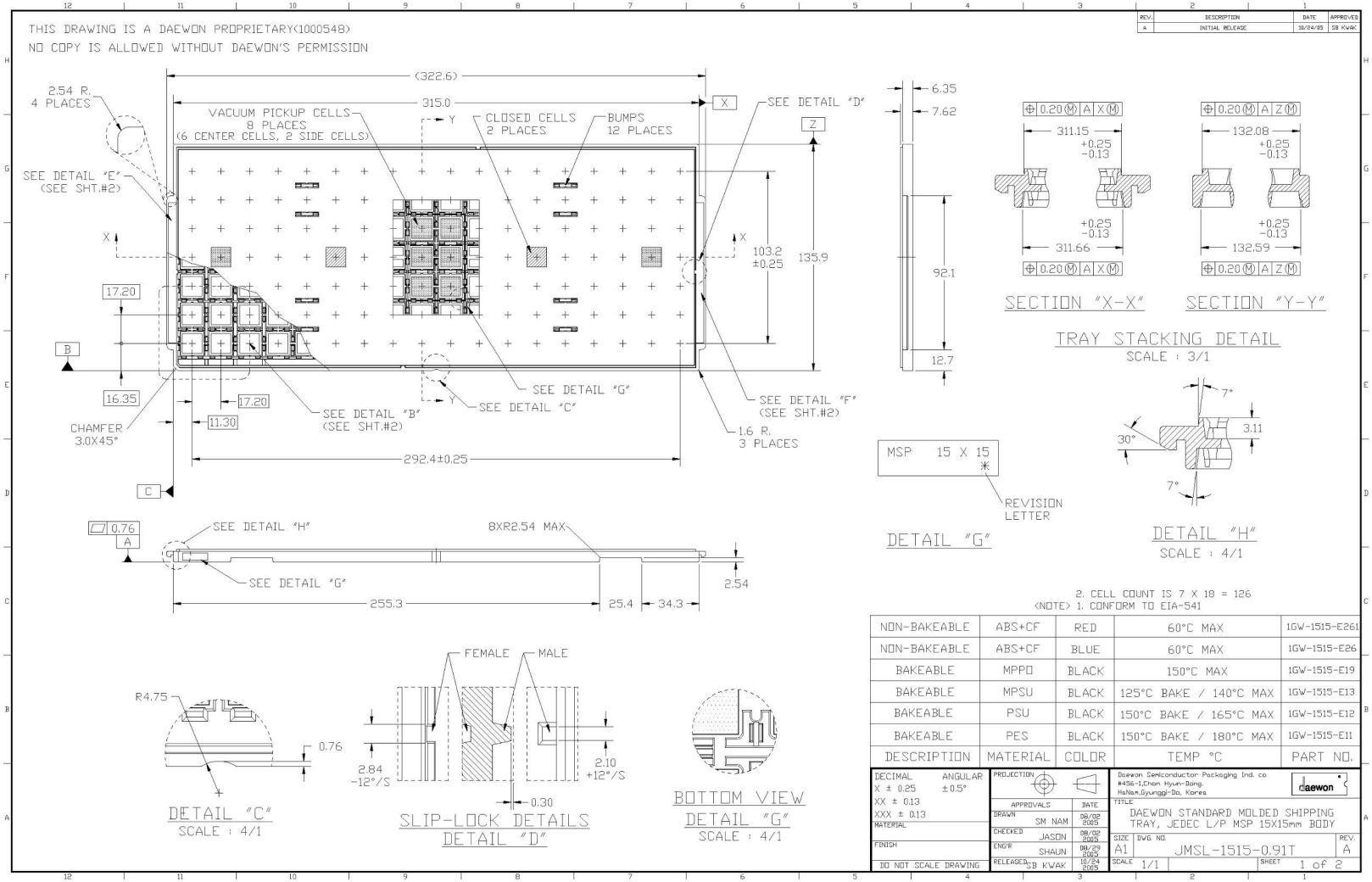


**Figure 1. Tray Diagram, Section 1**

## Tray Information (continued)

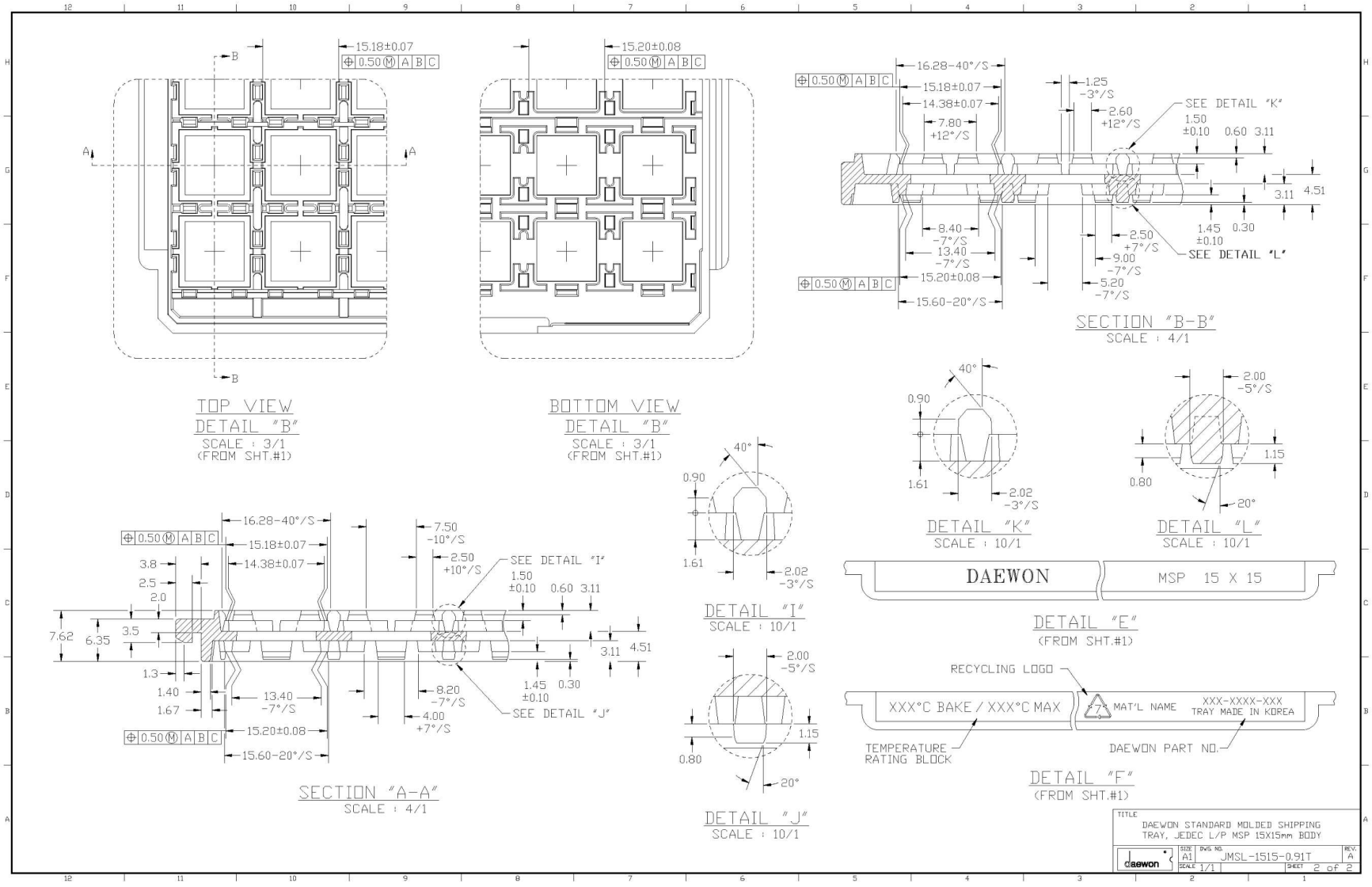


**Figure 2. Tray Diagram, Section 2**


Copyright © 2015–2016, Texas Instruments Incorporated

## PACKAGING INFORMATION

| Orderable Device | Status (1) | Package Type | Package Drawing | Pins | Package Qty | Eco Plan (2) | Lead/Ball Finish (6) | MSL Peak Temp (3) | Op Temp (°C) | Device Marking (4/5) | Samples |
|---|---|---|---|---|---|---|---|---|---|---|---|
| AFE58JD18ZBV | ACTIVE | NFBGA | ZBV | 289 | 126 | Green (RoHS & no Sb/Br) | SNAGCU | Level-3-260C-168 HR | -40 to 85 | AFE58JD18 | Samples |

(1) The marketing status values are defined as follows:
**ACTIVE:** Product device recommended for new designs.
**LIFEBUY:** TI has announced that the device will be discontinued, and a lifetime-buy period is in effect.
**NRND:** Not recommended for new designs. Device is in production to support existing customers, but TI does not recommend using this part in a new design.
**PREVIEW:** Device has been announced but is not in production. Samples may or may not be available.
**OBSOLETE:** TI has discontinued the production of the device.

(2) Eco Plan - The planned eco-friendly classification: Pb-Free (RoHS), Pb-Free (RoHS Exempt), or Green (RoHS & no Sb/Br) - please check http://www.ti.com/productcontent for the latest availability information and additional product content details.
**TBD:** The Pb-Free/Green conversion plan has not been defined.
**Pb-Free (RoHS):** TI's terms "Lead-Free" or "Pb-Free" mean semiconductor products that are compatible with the current RoHS requirements for all 6 substances, including the requirement that lead not exceed 0.1% by weight in homogeneous materials. Where designed to be soldered at high temperatures, TI Pb-Free products are suitable for use in specified lead-free processes.
**Pb-Free (RoHS Exempt):** This component has a RoHS exemption for either 1) lead-based flip-chip solder bumps used between the die and package, or 2) lead-based die adhesive used between the die and leadframe. The component is otherwise considered Pb-Free (RoHS compatible) as defined above.
**Green (RoHS & no Sb/Br):** TI defines "Green" to mean Pb-Free (RoHS compatible), and free of Bromine (Br) and Antimony (Sb) based flame retardants (Br or Sb do not exceed 0.1% by weight in homogeneous material)

(3) MSL, Peak Temp. - The Moisture Sensitivity Level rating according to the JEDEC industry standard classifications, and peak solder temperature.

(4) There may be additional marking, which relates to the logo, the lot trace code information, or the environmental category on the device.

(5) Multiple Device Markings will be inside parentheses. Only one Device Marking contained in parentheses and separated by a "~" will appear on a device. If a line is indented then it is a continuation of the previous line and the two combined represent the entire Device Marking for that device.

(6) Lead/Ball Finish - Orderable Devices may have multiple material finish options. Finish options are separated by a vertical ruled line. Lead/Ball Finish values may wrap to two lines if the finish value exceeds the maximum column width.

**Important Information and Disclaimer:**The information provided on this page represents TI's knowledge and belief as of the date that it is provided. TI bases its knowledge and belief on information provided by third parties, and makes no representation or warranty as to the accuracy of such information. Efforts are underway to better integrate information from third parties. TI has taken and continues to take reasonable steps to provide representative and accurate information but may not have conducted destructive testing or chemical analysis on incoming materials and chemicals. TI and TI suppliers consider certain information to be proprietary, and thus CAS numbers and other limited information may not be available for release.

In no event shall TI's liability arising out of such information exceed the total purchase price of the TI part(s) at issue in this document sold by TI to Customer on an annual basis.

ZBV (S–PBGA–N289) PLASTIC BALL GRID ARRAY

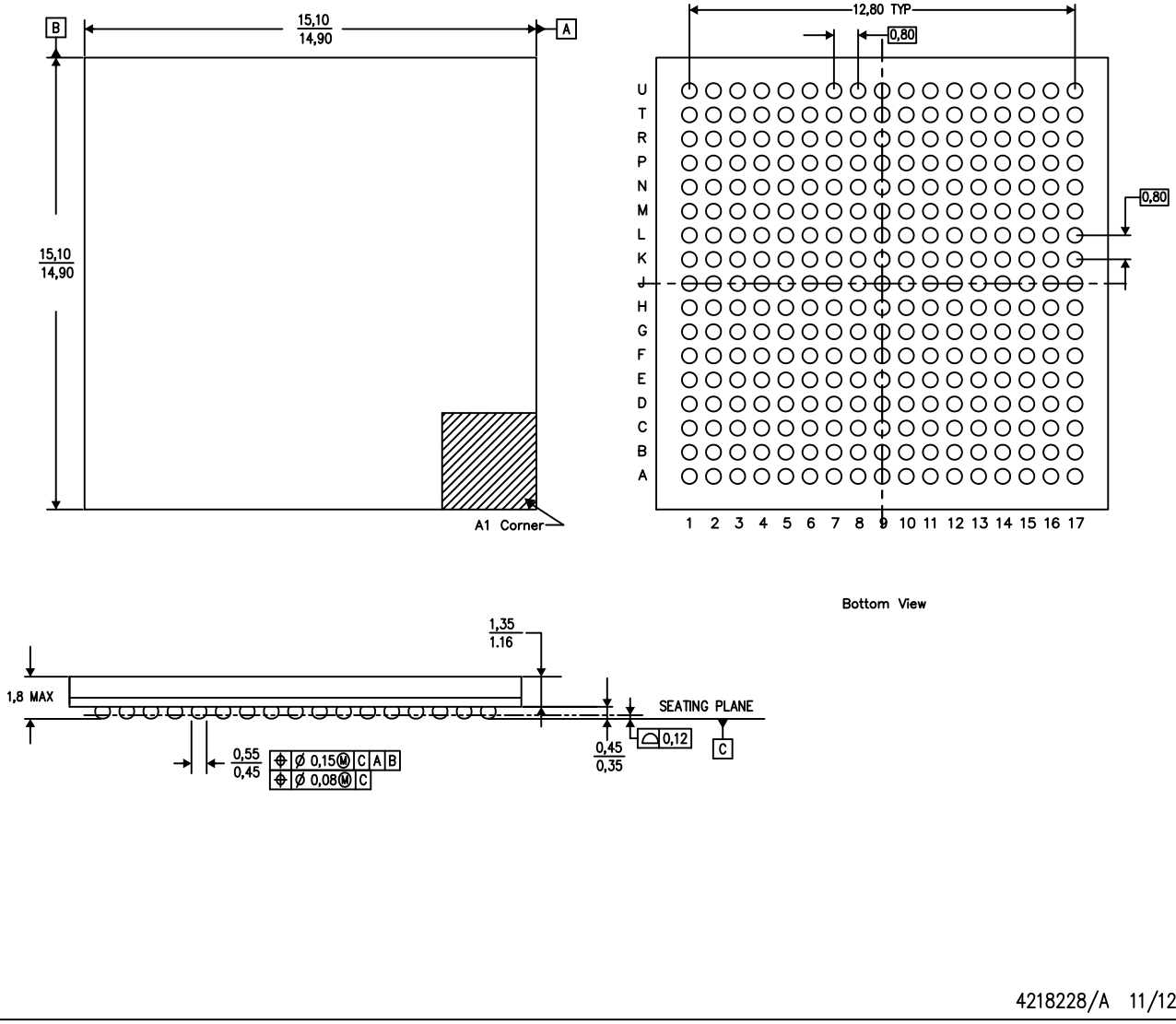


NOTES:
A. All linear dimensions are in millimeters.
B. This drawing is subject to change without notice.
C. This is a Pb–free solder ball design.

## IMPORTANT NOTICE

Texas Instruments Incorporated and its subsidiaries (TI) reserve the right to make corrections, enhancements, improvements and other changes to its semiconductor products and services per JESD46, latest issue, and to discontinue any product or service per JESD48, latest issue. Buyers should obtain the latest relevant information before placing orders and should verify that such information is current and complete. All semiconductor products (also referred to herein as “components”) are sold subject to TI’s terms and conditions of sale supplied at the time of order acknowledgment.

TI warrants performance of its components to the specifications applicable at the time of sale, in accordance with the warranty in TI’s terms and conditions of sale of semiconductor products. Testing and other quality control techniques are used to the extent TI deems necessary to support this warranty. Except where mandated by applicable law, testing of all parameters of each component is not necessarily performed.

TI assumes no liability for applications assistance or the design of Buyers’ products. Buyers are responsible for their products and applications using TI components. To minimize the risks associated with Buyers’ products and applications, Buyers should provide adequate design and operating safeguards.

TI does not warrant or represent that any license, either express or implied, is granted under any patent right, copyright, mask work right, or other intellectual property right relating to any combination, machine, or process in which TI components or services are used. Information published by TI regarding third-party products or services does not constitute a license to use such products or services or a warranty or endorsement thereof. Use of such information may require a license from a third party under the patents or other intellectual property of the third party, or a license from TI under the patents or other intellectual property of TI.

Reproduction of significant portions of TI information in TI data books or data sheets is permissible only if reproduction is without alteration and is accompanied by all associated warranties, conditions, limitations, and notices. TI is not responsible or liable for such altered documentation. Information of third parties may be subject to additional restrictions.

Resale of TI components or services with statements different from or beyond the parameters stated by TI for that component or service voids all express and any implied warranties for the associated TI component or service and is an unfair and deceptive business practice. TI is not responsible or liable for any such statements.

Buyer acknowledges and agrees that it is solely responsible for compliance with all legal, regulatory and safety-related requirements concerning its products, and any use of TI components in its applications, notwithstanding any applications-related information or support that may be provided by TI. Buyer represents and agrees that it has all the necessary expertise to create and implement safeguards which anticipate dangerous consequences of failures, monitor failures and their consequences, lessen the likelihood of failures that might cause harm and take appropriate remedial actions. Buyer will fully indemnify TI and its representatives against any damages arising out of the use of any TI components in safety-critical applications.

In some cases, TI components may be promoted specifically to facilitate safety-related applications. With such components, TI’s goal is to help enable customers to design and create their own end-product solutions that meet applicable functional safety standards and requirements. Nonetheless, such components are subject to these terms.

No TI components are authorized for use in FDA Class III (or similar life-critical medical equipment) unless authorized officers of the parties have executed a special agreement specifically governing such use.

Only those TI components which TI has specifically designated as military grade or “enhanced plastic” are designed and intended for use in military/aerospace applications or environments. Buyer acknowledges and agrees that any military or aerospace use of TI components which have ***not*** been so designated is solely at the Buyer's risk, and that Buyer is solely responsible for compliance with all legal and regulatory requirements in connection with such use.

TI has specifically designated certain components as meeting ISO/TS16949 requirements, mainly for automotive use. In any case of use of non-designated products, TI will not be responsible for any failure to meet ISO/TS16949.

| **Products** | | **Applications** | |
|---|---|---|---|
| Audio | www.ti.com/audio | Automotive and Transportation | www.ti.com/automotive |
| Amplifiers | amplifier.ti.com | Communications and Telecom | www.ti.com/communications |
| Data Converters | dataconverter.ti.com | Computers and Peripherals | www.ti.com/computers |
| DLP® Products | www.dlp.com | Consumer Electronics | www.ti.com/consumer-apps |
| DSP | dsp.ti.com | Energy and Lighting | www.ti.com/energy |
| Clocks and Timers | www.ti.com/clocks | Industrial | www.ti.com/industrial |
| Interface | interface.ti.com | Medical | www.ti.com/medical |
| Logic | logic.ti.com | Security | www.ti.com/security |
| Power Mgmt | power.ti.com | Space, Avionics and Defense | www.ti.com/space-avionics-defense |
| Microcontrollers | microcontroller.ti.com | Video and Imaging | www.ti.com/video |
| RFID | www.ti-rfid.com | | |
| OMAP Applications Processors | www.ti.com/omap | **TI E2E Community** | e2e.ti.com |
| Wireless Connectivity | www.ti.com/wirelessconnectivity | | |

Mailing Address: Texas Instruments, Post Office Box 655303, Dallas, Texas 75265
Copyright © 2016, Texas Instruments Incorporated