AFE5804EVM

The AFE5804EVM is an evaluation tool designed for the ultrasound analog front-end (AFE) device AFE5804. In order to deserialize the outputs of the AFE5804, use of the ADSDeSer-50EVM during evaluation is also recommended.

Contents

1 Introduction 2
1.1 Features 2
1.2 Power Supplies 2
1.3 Indicators 2
2 Board Configuration 4
2.1 I/O and Power Connectors 4
2.2 Jumpers and Setup 5
2.3 Test Points 7
3 Board Operation 8
3.1 Software Installation and Operation 8
3.2 Hardware Setup 10
3.3 Clock Selection 11
3.4 Data Analysis 11
4 Schematics and Layout 12
4.1 Schematics 12
4.2 PCB Layout 12
4.3 Bill of Materials 20
5 Typical Performance 23
Appendix A TSW1400 for Evaluating AFE5804/5 24
Appendix B High Speed Data Converter Pro (HSDCPro) GUI Installation 28

List of Figures

1 AFE5804EVM LED Locations 3
2 AFE5804EVM I/O Connectors and Locations 4
3 Locations of Jumpers, JTAG, and Switches on the AFE5804EVM 5
4 Default Setup for Jumpers 6
5 AFE5804EVM USB SPI Interface for TGC Mode 8
6 AFE5804EVM USB SPI Interface for CW Mode 9
7 AFE5804EVM USB SPI Interface for ADC Setup 10
8 Typical AFE5804 Bench Setup 11
9 Clock Selection Jumper Configurations 11
10 Top Layer, Signal 12
11 Inner Layer 1, Ground 13
12 Inner Layer 2, Signal 14
13 Inner Layer 3, Power 15
14 Inner Layer 4, Ground 16
15 Bottom Layer, Signal 17
16 Top Silk Screen Layer 18

SPI is a trademark of Motorola, Inc..

Copyright © 2008–2015, Texas Instruments Incorporated

17 Bottom Silk Screen Layer 19
18 Typical Performances of AFE5804 23
19 User Interface: Step-by-Step setup 24
20 User Interface: Frequency Load Value to Signal Generator 25
21 TSW1400 Interface 26
22 Analysis of Noncoherent Sampled Data 27
23 HSDCPro Install (Begin) 28
24 HSDCPro Install (Install Directory) 29
25 HSDCPro Install (TI License Agreement) 30
26 HSDCPro Install (NI License Agreement) 31
27 HSDCPro Install (Start Installation) 32
28 HSDCPro Install (Installation Progress) 33
29 HSDCPro Install (Installation Complete) 34
30 HSDCPro Install (h) 35
31 HSDCPro Install 35

List of Tables

1 AFE5804EVM Default Settings When Powered On 10
2 Channel-to-Channel Matching Between the AFE5804EVM and ADSDeSER-50EVM 11
3 Bill of Materials 20

1 Introduction

The AFE5804 includes an 8-channel, voltage-controlled amplifier (VCA) and an 8-channel, 50-MSPS analog-to-digital converter (ADC). The outputs of the ADC are 8-channel LVDS outputs, which can be deserialized by the ADSDeSer-50EVM. The AFE5804 evaluation module (EVM) provides an easy way to examine the performance and functionalities of AFE5804.

1.1 Features

- Characterizes the AFE5804
- Supports CW functionalities test
- Provides 8-channel, low-voltage differential signal (LVDS) outputs from the ADC
- Compatible with the standard TI LVDS deserializer ADSDeSer-50EVM
- Communicates with a personal computer (PC) through a USB interface
- RS-232 interface also can be configured in case users wish to control the AFE5804 with a microcontroller. MSP430 programming is required.
- Includes multiple power management solutions for the AFE5804 and other devices.
- Onboard Vcntl generator (0 V - 1.2 V).

1.2 Power Supplies

The AFE5804EVM requires only ±5-V power supplies for operation.

1.3 Indicators

The AFE5804EVM has four LEDs onboard as shown in Figure 1. The states of these LEDs demonstrate the normal operation of the AFE5804EVM.

- LED1, LED2: +3.3-VA and +3.3-VD power supply indicators. They show the normal operation of 3.3-V power regulators.
- LED 3: MCU operation indicator. Flashing state can indicate the normal operation of the MSP430 when the MSP430 is appropriately programmed.
- LED 4: 1.8-V power indicators

Copyright © 2008–2015, Texas Instruments Incorporated

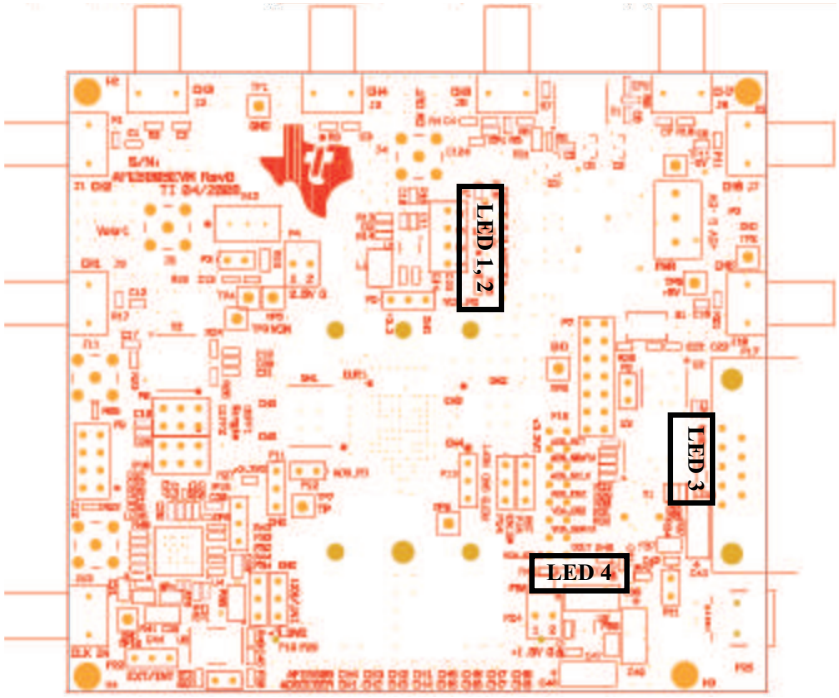

Figure 1. AFE5804EVM LED Locations

Copyright © 2008–2015, Texas Instruments Incorporated

2 Board Configuration

This section describes in detail the locations and functionalities of inputs, outputs, jumpers, and test points of the AFE5804EVM.

2.1 I/O and Power Connectors

Pin A1 of the AFE5804 is marked by a white dot on its package as well as a white dot on the board. The positions and functions of the AFE5804EVM connectors are discussed in this section.

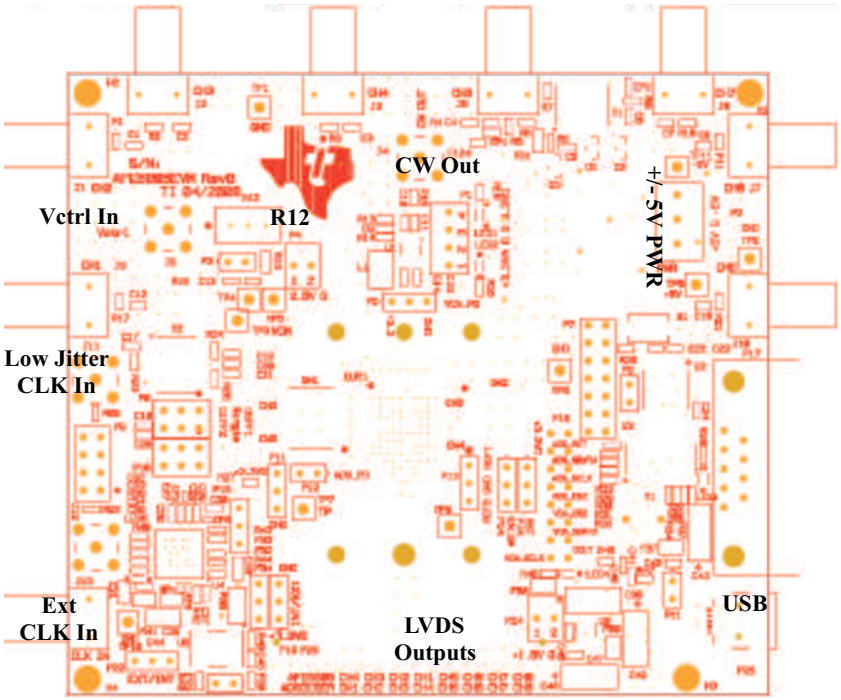

Figure 2. AFE5804EVM I/O Connectors and Locations

- Analog Inputs Ch1-Ch8 (J1-J3, J5-J7, J9, J10): Single-ended analog signal inputs with 50-Ω termination and AC-coupling
- CW Output (J4): CW output after I/V translator
- Vcntl Input (J8 optional): VCA gain control voltage of AFE5804, 0 V to 1.2 V, when this SMA connector is used, shunt P3 must be removed. .
- Low-Jitter CLK Source Input (J11): This input accepts clocks with low-jitter noise, such as HP8644 output. 20- to 50-MHz, 50% duty-cycle clock with 1- to 2-Vrms amplitude can be used. When J11 is used, ensure that shunts P18, P23, and P22 are removed.
- External CLK Input (J13): ADC Clock input, such as FPGA outputs. However, the AFE5804 does not achieve satisfactory performances due to the high-jitter noise of the clock.
- ±5-V PWR connector (P2): Power supply input
- Regulated power supply outputs (P1, P4, and P24): 3.3-VA, 3.3-VD, 2.5-VA, 1.8-VD outputs. Connectors need to be installed.
- RS-232 Input (P17): PC serial port interface for setting AFE5804
- USB input (P25): USB interface to control the AFE5804 (default)
- LVDS Outputs Ch1-Ch8 (P26): Differential LVDS data outputs
- R12 is used to adjust the onboard Vcntl from 0 V to 1.2 V. P3 must be shorted when onboard Vcntl is used.

Copyright © 2008–2015, Texas Instruments Incorporated

2.2 Jumpers and Setup

In the following detailed description, the board has been set to default mode (see Figure 3).

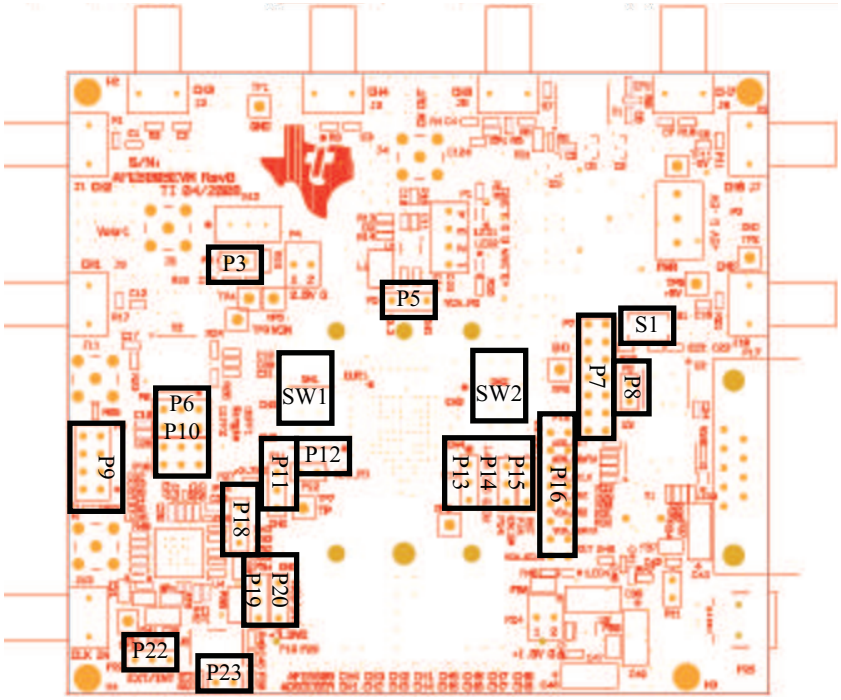

Figure 3. Locations of Jumpers, JTAG, and Switches on the AFE5804EVM

Copyright © 2008–2015, Texas Instruments Incorporated

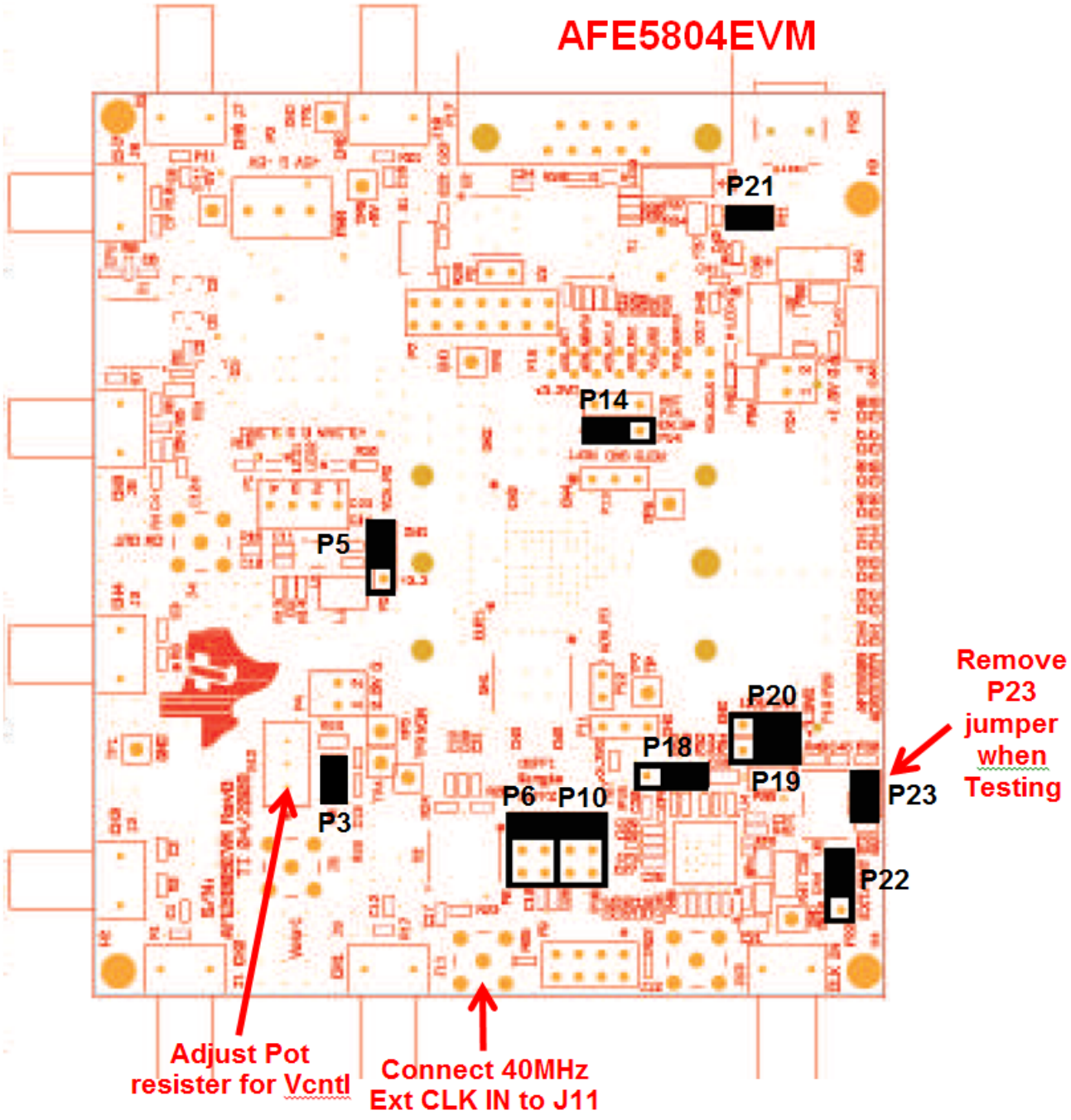

Figure 4. Default Setup for Jumpers

- P5: Power-down pin for the VCA section of the AFE5804. Grounded (default mode) or High (+3.3 VD) for power-down mode.
- P6, P10: AFE5804 ADC clock input selection: Transformer-based differential clock, single-ended LVCMOS clock, or future clock option (needs U4 for support). The default mode uses the transformer-based differential clock.
- P7: MSP430 microcontroller JTAG interface
- P8: MAX3221 (RS-232) power-off jumper. When the jumper is removed, MAX3221 is completely powered off. In the default mode, the jumper is uninstalled because the USB interface is used.
- P9: SPI™ interface for U4.

Copyright © 2008–2015, Texas Instruments Incorporated

- P11: TI internal use. Default is floating.
- P12: Power-down pin for ADS. Active High (+3.3 VD). Floating for default mode.
- P13: External ADS reference voltage inputs. Floating in the internal reference mode.
- P14: EN_SM: In the default mode, P14 connects to +3.3 VD, and the state machine is enabled. The AFE5804 is operated using only one SPI port (ADS SPI port).
- P15: RST pin; connects to H4 in the default mode through 0-Ω resistors.
- P16: Debug port for monitoring VCA and ADS SPI signals.
- P19: TI internal use. Connects to 3.3 VD.
- P20: INT/EXT reference mode selection. +3.3 VD for the internal reference mode (default); GND for the external reference mode.
- P22: Uses onboard 40-MHz clock or external clock through J13. The default mode uses the onboard clock
- P23: Power-on onboard 40-MHz clock generator. Default is on.
- P18: Because U4 is uninstalled, this jumper must be set as Figure 4 shows
- S1: MSP430 reset button
- SW1, SW2: CW outputs summation switch. Individual CW output current can be summed through the I/V translator U1 when its corresponding switch is set to ON.

2.3 Test Points

Multiple test points are provided on the EVM. Detail descriptions follow. Under normal operation mode, it is unnecessary to measure voltages at most of these test points.

- TP1: GND
- TP2: GND
- TP3: VCM
- TP4: Vcntl test point
- TP5: GND
- TP6: GND
- TP7: Test point, TI internal only
- TP8: +5 V
- TP9: CM
- TP10:GND
- TP11: -5 V

Copyright © 2008–2015, Texas Instruments Incorporated

3 Board Operation

This section describes how to operate the AFE5804EVM for evaluation purposes. Both software and hardware installation and operation are discussed.

3.1 Software Installation and Operation

The AFE5804EVM has USB SPI software and AFE58XXEVM driver that are located on the TI website on the AFE5804 product folder under *Tools & software*. Run the AFE58XXEVM Driver install.exe and the setup.exe to install the driver and software, respectively. The personal computer (PC) recognizes the EVM after software installation.

To launch the software after successful installation, click:
Start Menu → All Programs → Texas Instruments → AFE5804EVM USB SPI → AFE5804EVM USB SPI

Three different modes are shown in Figure 5, Figure 6, and Figure 7.

The software updates the AFE5804 registers as soon as users change any current setup (i.e., the program sends out new register values due to any value change). It is recommended that users change at least one register value before measurement. Therefore, the register values in a device can be synchronized to the displayed values on the software interface.

In most cases, users only need to change the VCA setup. The ADC setup can remain the same as the integrated circuit (IC) is powered up.

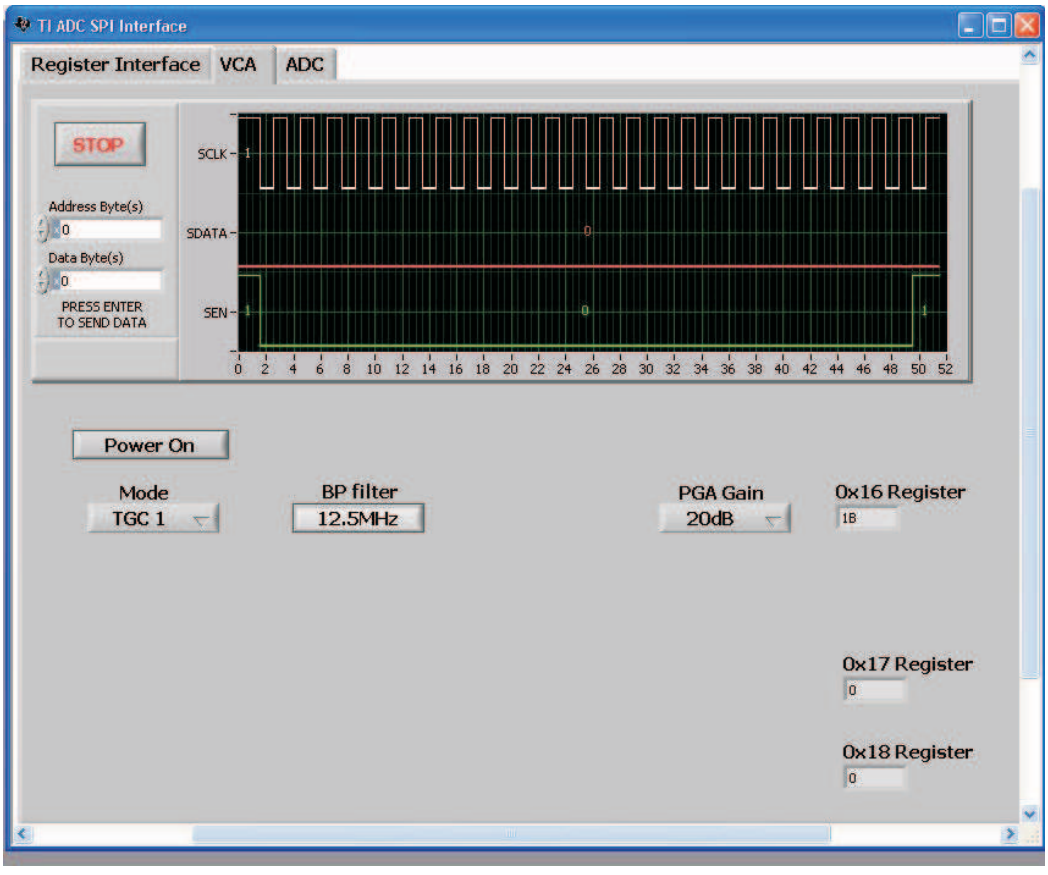

Figure 5. AFE5804EVM USB SPI Interface for TGC Mode

Copyright © 2008–2015, Texas Instruments Incorporated

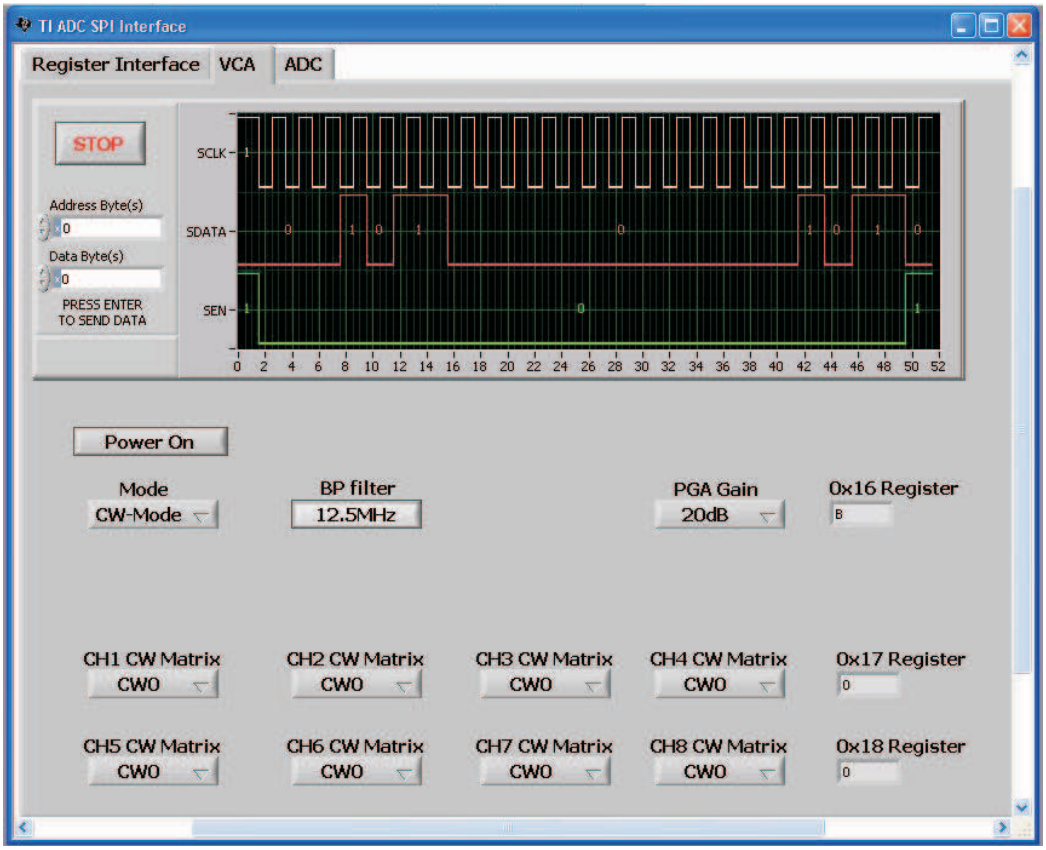

Figure 6. AFE5804EVM USB SPI Interface for CW Mode

Copyright © 2008–2015, Texas Instruments Incorporated

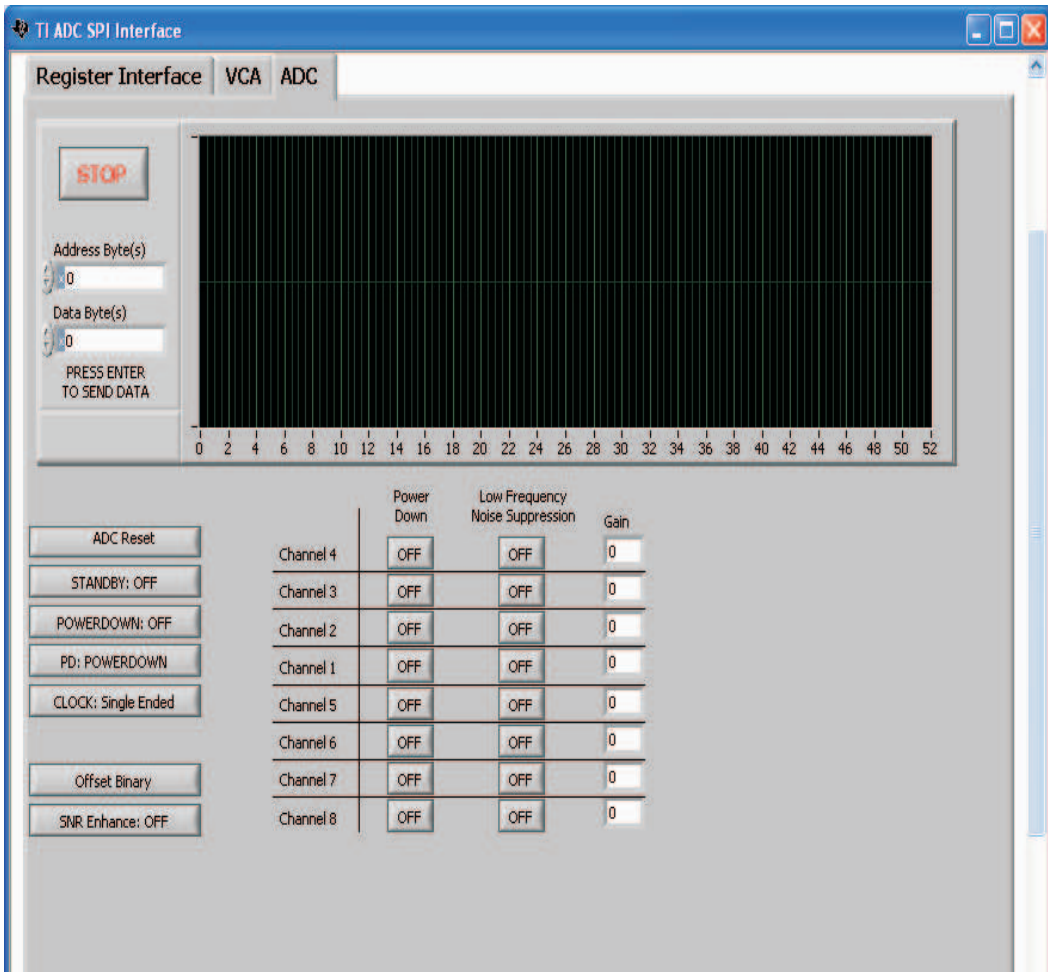

Figure 7. AFE5804EVM USB SPI Interface for ADC Setup

3.2 Hardware Setup

When the AFE5804EVM is powered on in the default mode, the AFE5804 is set as described in Table 1.

Table 1. AFE5804EVM Default Settings When Powered On

VCA	ADS
TGC mode 1	Single End Clock
PGA = 20 dB	Digital Gain = 0
Filter = 17 MHz	Other parameters are as stated in data sheet

Initial measurements can be made under these default settings. See the AFE5804 data sheet (SBOS442) for additional settings.

As previously mentioned, the deserializer ADSDeSER-50EVM is required. See details in the ADSDeSER-50EVM user's guide (SBAU091). An example bench setup is shown in Figure 7. Band-pass filters are required for signal source in order to ensure the correct SNR measurements of the AFE5804.

Copyright © 2008–2015, Texas Instruments Incorporated

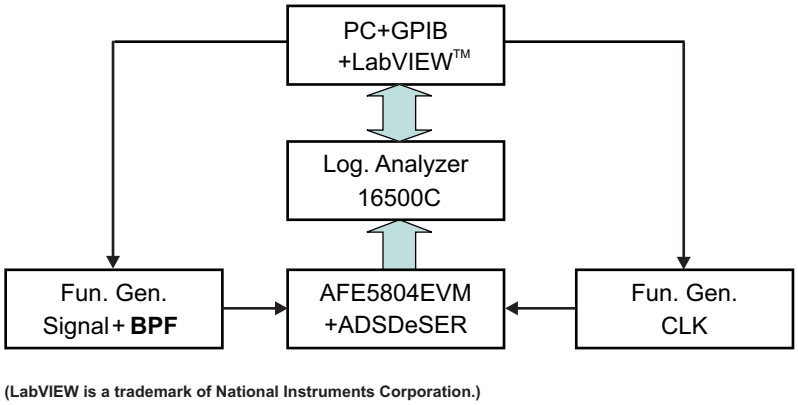

Figure 8. Typical AFE5804 Bench Setup

The channel order of the AFE5804 outputs is not the same as that of the ADS527x outputs. Consequently, the channel number on the ADSDeSER-50EVM or AFE5804EVM can be misleading. Table 1 provides channel-to-channel sequence matching between the ADSDeSER-50EVM and the AFE5804EVM.

Table 2. Channel-to-Channel Matching Between the AFE5804EVM and ADSDeSER-50EVM

AFE5804	FCLK	CH4	CH3	CH2	CH1	CH5	CH6	CH7	CH8	LCLK
ADSDESER	FCLK	CH1	CH2	CH3	CH4	CH5	CH6	CH7	CH8	LCLK

For example, when an analog signal is present on CH1 of the AFE5804EVM, the corresponding 12-bit digital output can be seen on CH4 of the ADSDeSER-50EVM.

3.3 Clock Selection

The AFE5804 can be clocked through a transformer-based differential clock, single-ended clock, or future clock input options provided by U4 as Figure 9 shows.

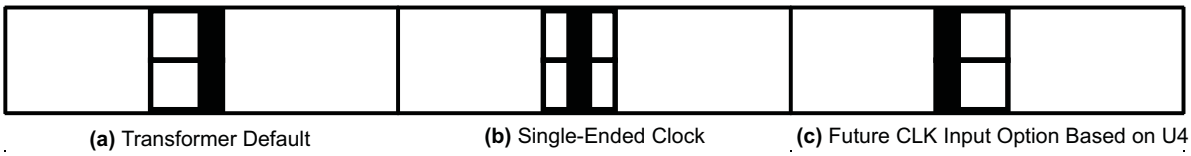

Figure 9. Clock Selection Jumper Configurations

The clock source of the EVM can be the onboard 40-MHz clock, HP8644 low-jitter clock source, or external clock source. The best performance of this EVM is achieved when the low-jitter clock source HP8644 is used. P22, P23, and P18 must be removed in order to disable the onboard clock.

When HP8644 or similar clock sources are unavailable, the onboard 40-MHz clock is the desirable source. The jumpers P22, P23, and P18 must be configured as shown in Figure 4 (i.e., the default setup for AFE5804EVM). In this mode, the transformer-based differential clock is used.

3.4 Data Analysis

Based on the data file acquired by a logic analyzer, the performance of AFE5804 can be evaluated.

Appendix A provides one solution (TI TSW1400 software) to analyze the data file captured. Coherent sampling is recommended but is not mandatory. Due to the frequency accuracy requirement of coherence sampling, two HP8644s are required for generating an ADC clock and analog signal. For most users, this may be infeasible. Data analysis based on windowing is a more suitable approach.

Copyright © 2008–2015, Texas Instruments Incorporated

4 Schematics and Layout

This section provides the schematics, the AFE5804EVM board layout, and the bill of materials.

4.1 Schematics

The schematics appear at the end of the document.

4.2 PCB Layout

The AFE5804EVM uses a six-layer printed-circuit board. The following figures show each layer.

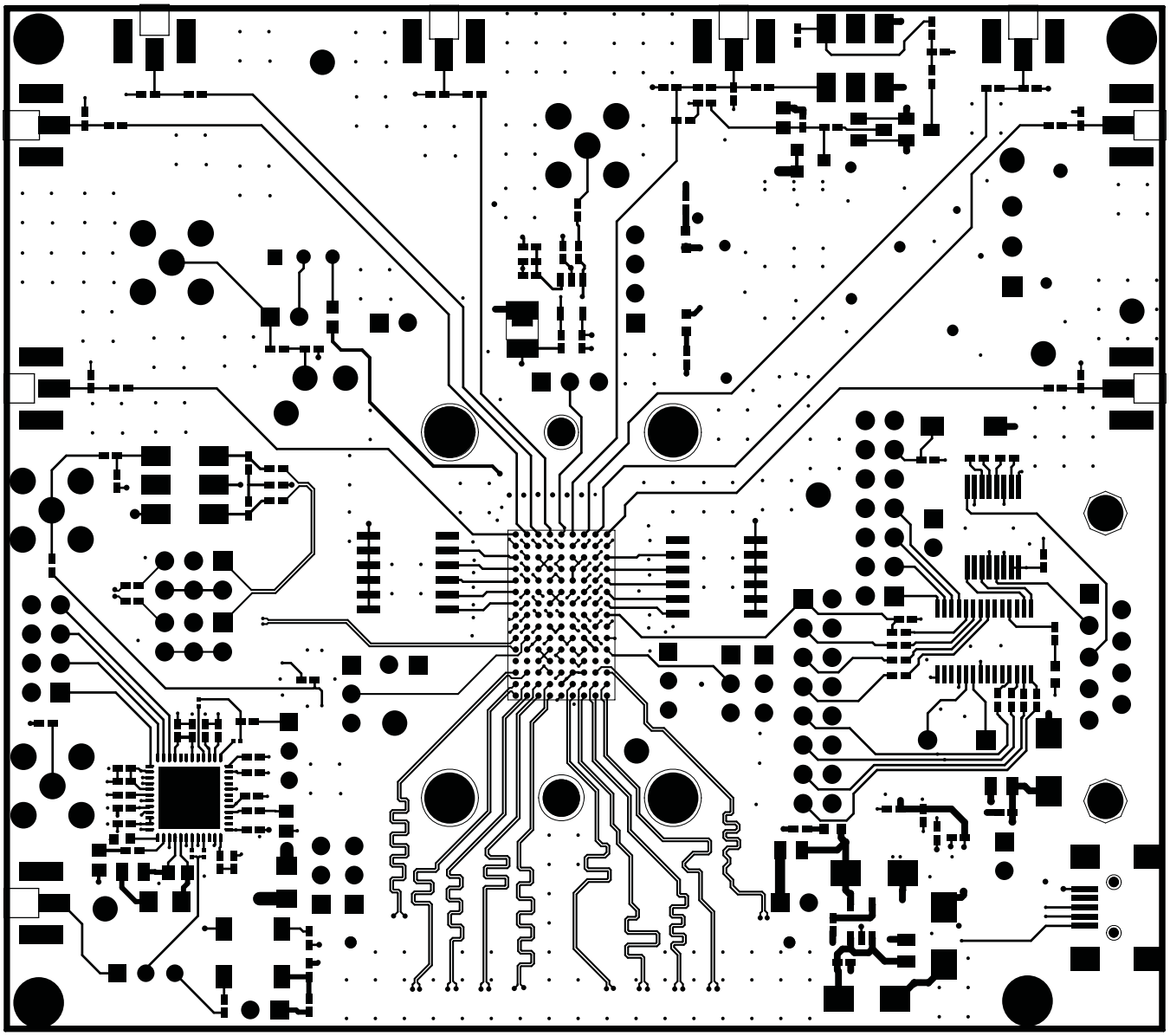

Figure 10. Top Layer, Signal

Copyright © 2008–2015, Texas Instruments Incorporated

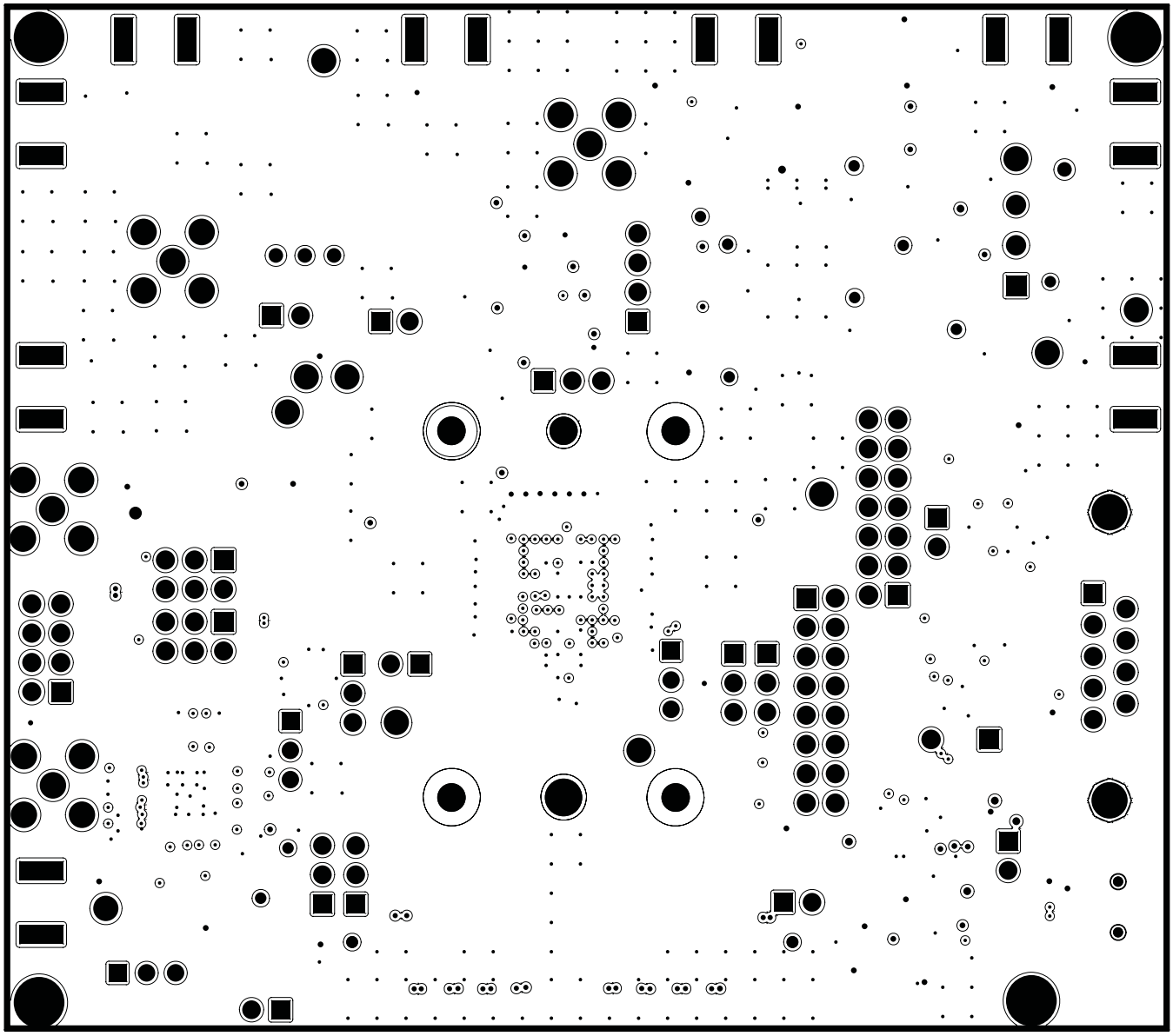

Figure 11. Inner Layer 1, Ground

Copyright © 2008–2015, Texas Instruments Incorporated

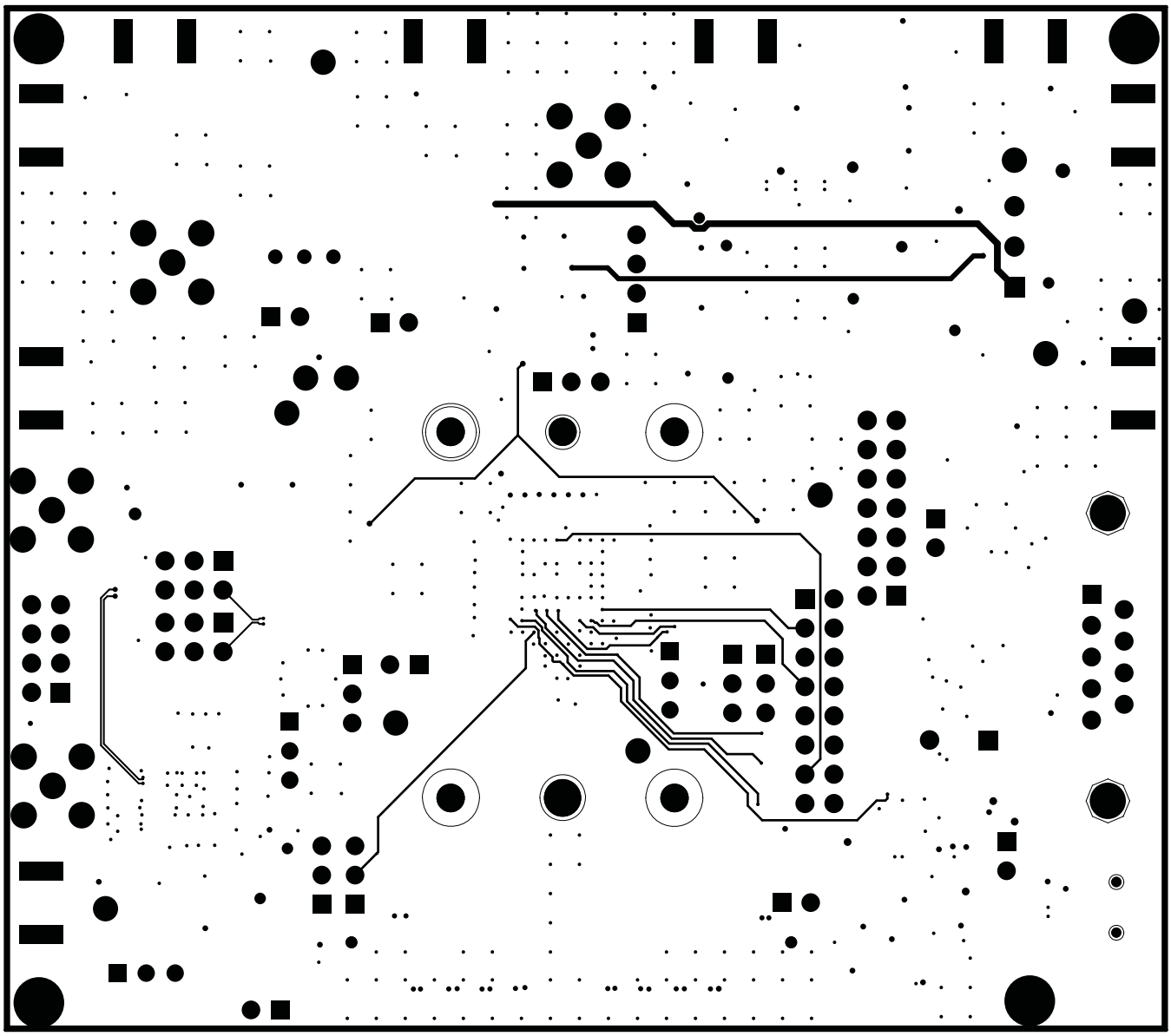

Figure 12. Inner Layer 2, Signal

Copyright © 2008–2015, Texas Instruments Incorporated

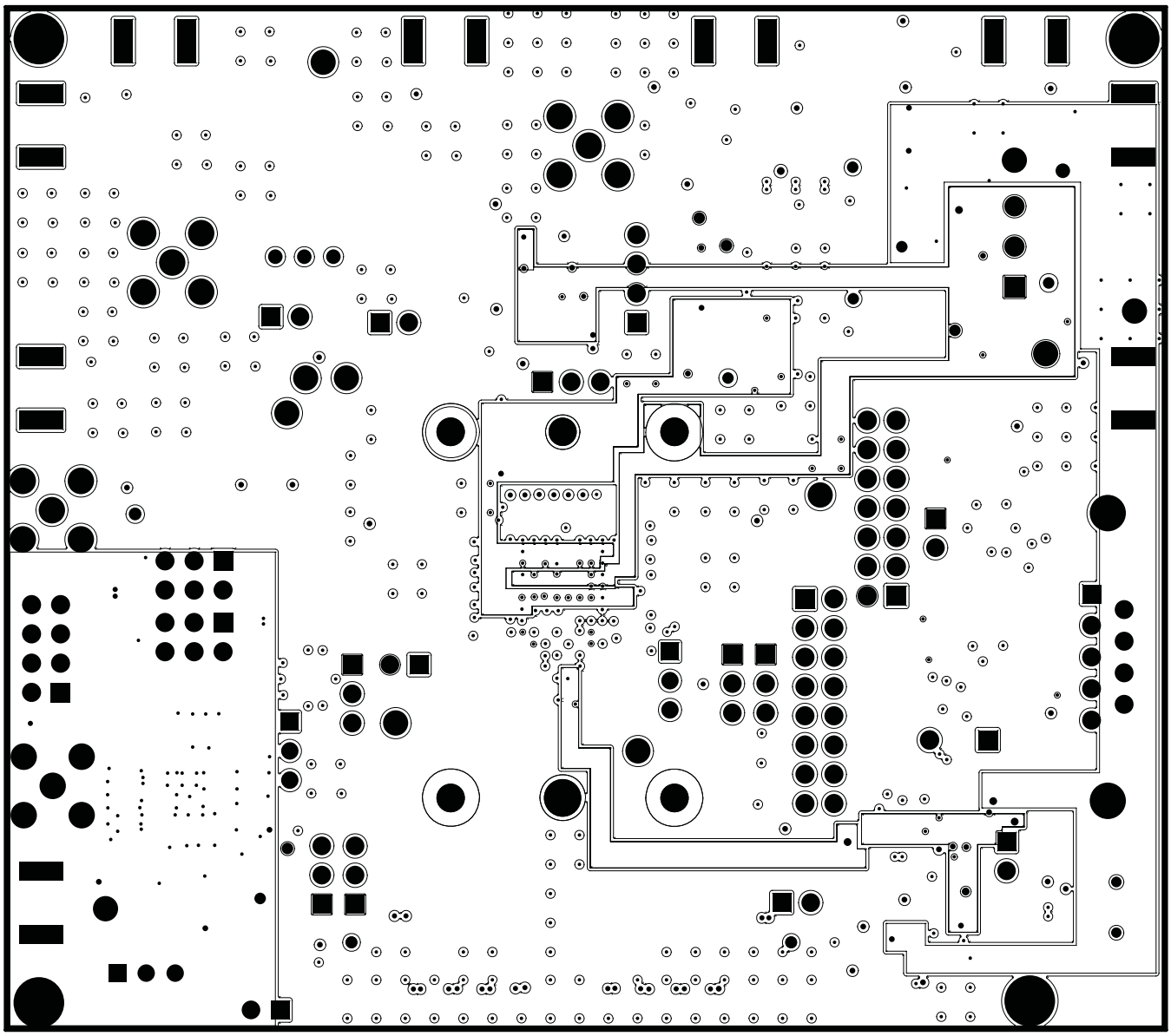

Figure 13. Inner Layer 3, Power

Copyright © 2008–2015, Texas Instruments Incorporated

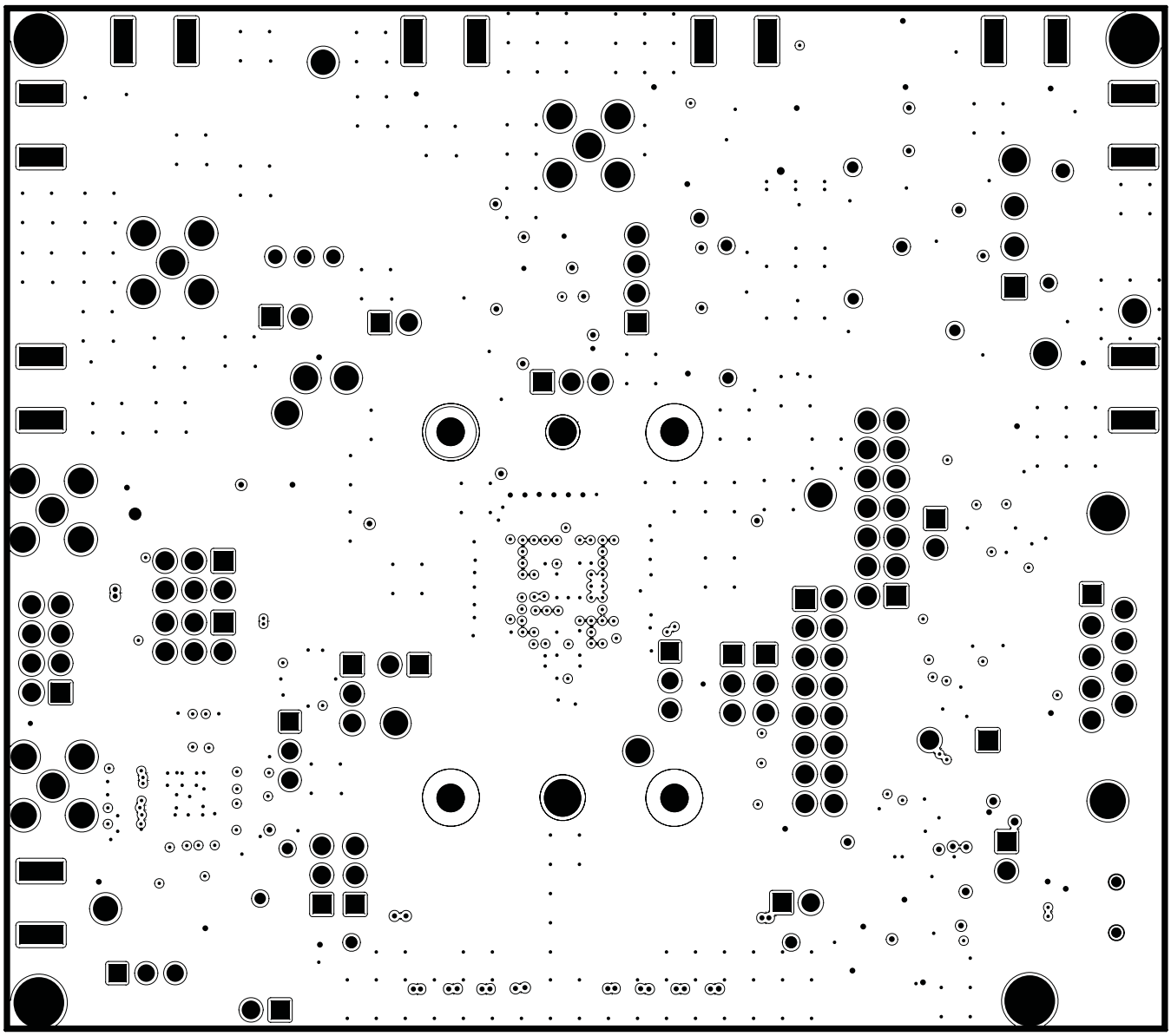

Figure 14. Inner Layer 4, Ground

Copyright © 2008–2015, Texas Instruments Incorporated

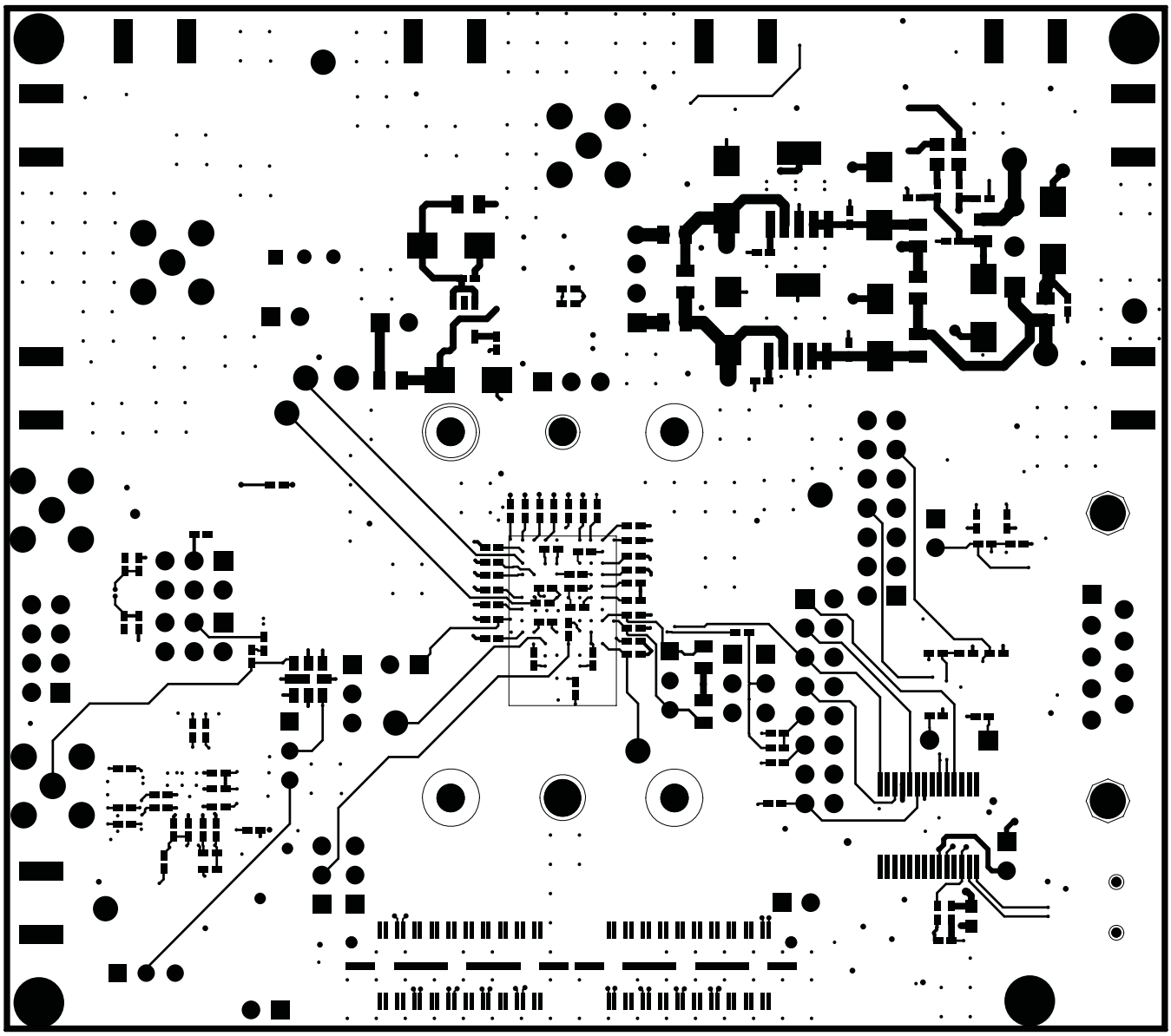

Figure 15. Bottom Layer, Signal

Copyright © 2008–2015, Texas Instruments Incorporated

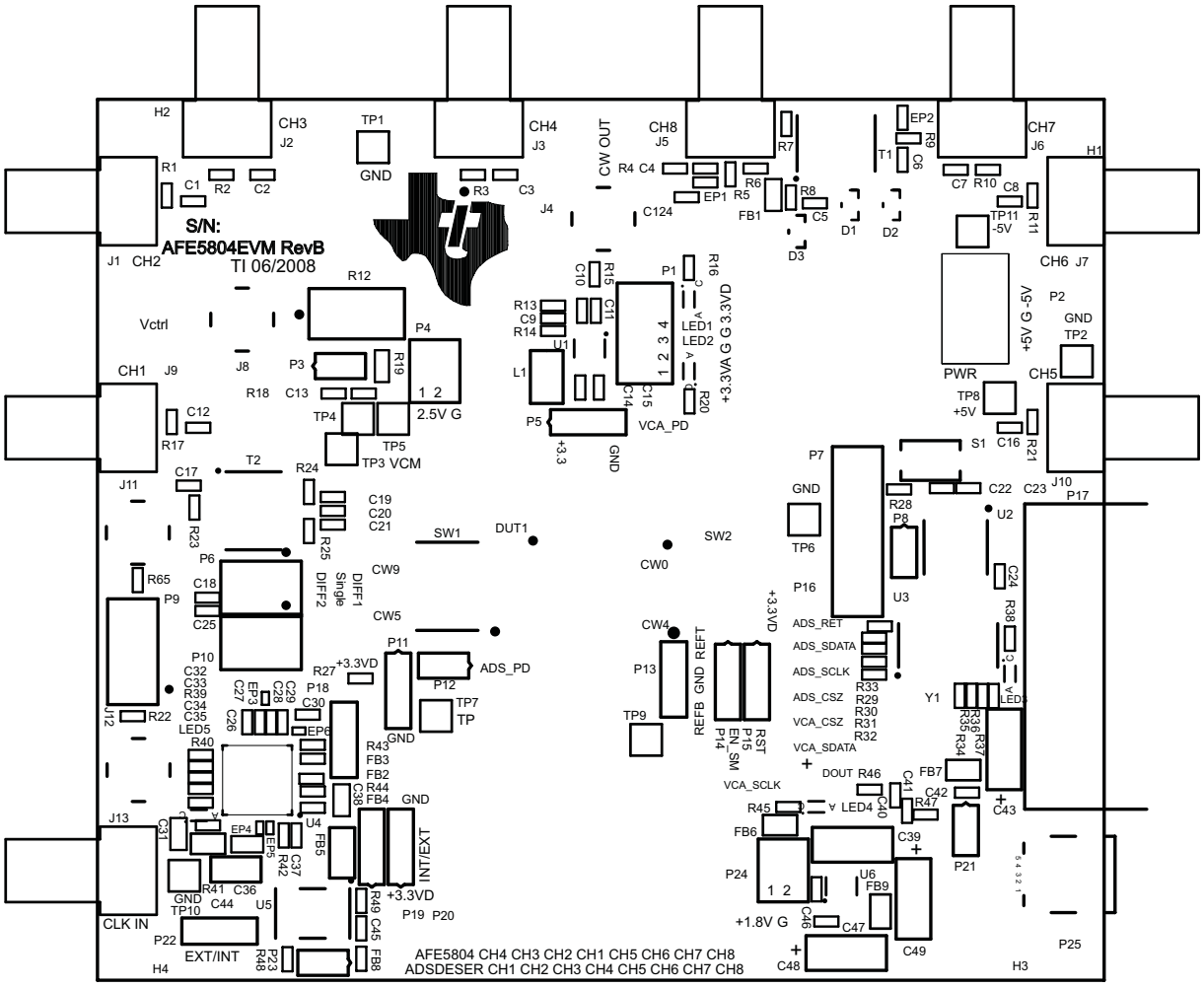

Figure 16. Top Silk Screen Layer

Copyright © 2008–2015, Texas Instruments Incorporated

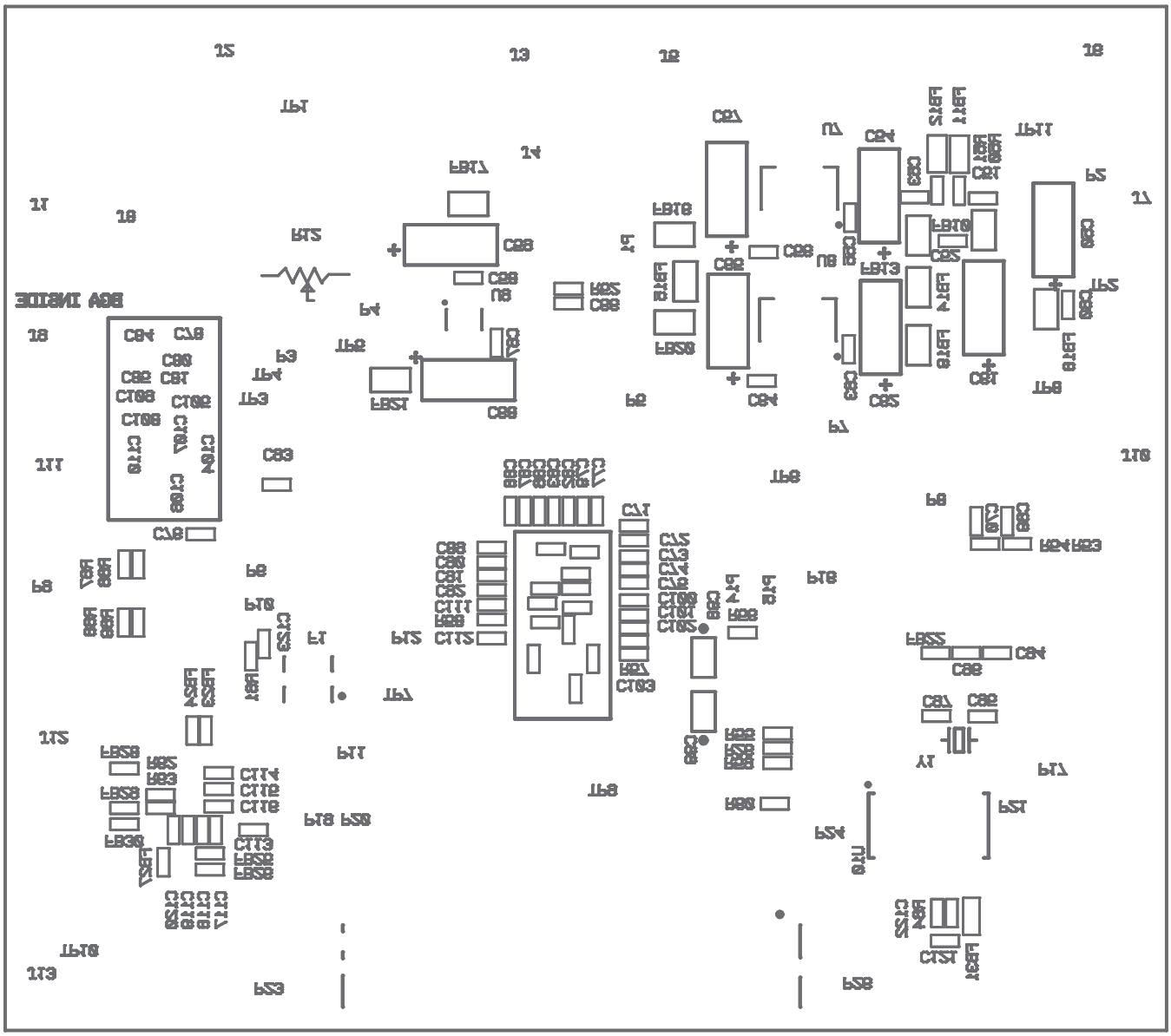

Figure 17. Bottom Silk Screen Layer

Copyright © 2008–2015, Texas Instruments Incorporated

4.3 Bill of Materials

Table 3. Bill of Materials

Item	MFG	MFG Part Number	RefDes	Value or Function
1	TI	MSP430F1232IPW	U3	MIXED SIGNAL MICROCONTROLLER
2	KEMET	C0402C103K3RAC	C9	CAPACITOR,SMT,0402,CER,0.01µF,25V,10%,X7R
3	KEMET	C0402C104K8PAC	C1, C2, C3, C4, C5, C6, C7, C8, C10, C11, C12, C13, C14, C15, C16, C17, C18, C19, C20, C21, C22, C23, C24, C25, C26, C27, C28, C29, C30, C32, C33, C34, C35, C40, C41, C42, C45, C46, C47, C51, C52, C53, C55, C56, C58, C60, C63, C64, C67, C69, C70, C71, C72, C73, C74, C75, C76, C77, C78, C79, C80, C81, C82, C83, C84, C85, C86, C87, C88, C89, C90, C91, C93, C94, C96, C100, C101, C102, C103, C104, C105, C106, C107, C108, C109, C110, C111, C112, C113, C114, C115, C116, C117, C118, C119, C120, C121, C122, C123, C124	CAPACITOR,SMT,0402,CER,0.1µF,10V,10%,X5R
4	PANASONIC	ECJ-0EC1H100D	C66, C95, C97	CAPACITOR,SMT,0402,CER,10pF,50V,±0.5pF,NPO
5	MURATE	GRM155R60J225ME15D	C37, C92	CAPACITOR,SMT,0402,CERAMIC,2.2µF,6.3V,20%,X5R
6	PANASONIC	ECJ-1VB0J475K	C36	CAPACITOR,SMT,0603,CER,4.7µF,6.3V,10%,X5R
7	TAIYO YUDEN	JMK107BJ106MA-T	C31, C38	CAPACITOR,SMT,0603,CER,10µF,6.3V,20%,X5R
8	MURATA	GRM31CR60J476ME19B	C44	CAPACITOR,SMT,CER,1206,47µF,6.3V,20%,X5R
9	AVX	TACR475M020R	C98, C99	CAP,SMT,TAN,0805,4.7µF,20V,20%,R-CASE
10	AVX	TPSC226K016R0375	C39, C43, C48, C49, C50, C54, C57, C59, C61, C62, C65, C68	10%, 16V, 22µF
11	SAMTEC	SMA-J-P-X-ST-EM1	J1, J2, J3, J5, J6, J7, J9, J10, J13	SMA JACK EDGE MOUNT,062PCB,BRASS/GOLD,STRAIGHT,50 Ω
12	SAMTEC	SMA-J-P-H-ST-TH1	J4, J8, J11, J12	SMA COAX STRAIGHT PCB JACK,SMT,175TL,50 Ω,GOLD
13	TYCO ELECTRONICS	745781-4	P17	DSUB, 9 PIN, R/A FEM
14	ADVANCED CONNECTER	MNE20-5K5P10	P25	MINI-AB USB OTG RECEPTACLE R/A SMT TYPE
15	USCC	HC-18/U-4.1943M	Y1	4.194300 MHz
16	EPSON TOYOCOM	HF-372A(UNINSTALLED)	F1	CRYSTAL FILTER UNINSTALLED
17	TI	N/A	U4	(UNINSTALLED)
18	Not Installed	PAD0201(UN)	EP4, EP6	(Uninstalled Part) EMPTY PAD,SMT,0201
19	Not Installed	PAD0402(UN)	EP1, EP2	(Uninstalled Part) EMPTY PAD,SMT,0402
20	MURATA	BLM15BD102SN1D	FB2, FB3, FB4, FB8, FB22, FB23, FB24, FB25, FB26, FB27, FB28, FB29, FB30	FERRITE BEAD,SMT,0402,1 kΩ,200mA
21	MURATA	BLM18EG601SN1D	FB31	FERRITE BEAD,SMT,0603,600 Ω at 100MHz,25%,500mA
22	STEWARD	HI0805R800R-00	FB6, FB7, FB9, FB10, FB13, FB14, FB15, FB16, FB17, FB18, FB19, FB20, FB21	FERRITE,SMT,0805,80 Ω at 100MHz
23	STEWARD	LI1206H151R-00	FB5	FERRITE,SMT,1206,150 Ω at 100MHz,0.8A
24	MOLEX	39357-0003	P2	HEADER, THRU, POWER, 3P,3.5MM, EUROSTYLE
25	SAMTEC	QTH-040-01-L-D-DP-A	P26	HEADER,SMT,80P,0.5mm,FEM,DIFF PAIR,RECEPTACLE,168H
26	SAMTEC	SSQ-104-02-F-D	P9	HEADER,THU,8P,2x4,100LS,FEM,VERT,194TL
27	SAMTEC	TSW-103-08-G-D	P6, P10	HEADER,THU,6P,2x3,MALE,DUAL ROW,100LS,200TL
28	SAMTEC	TSW-107-07-G-D	P7	HEADER,THU,14P,2x7,MALE,DUAL ROW,100LS,100TL
29	SAMTEC	TSW-108-07-G-D	P16	HEADER,THU,16P,2x8,MALE,DUAL ROW,100LS,100TL(UNINSTALLED)
30	TYCO ELECTRONICS	103321-2	P3, P8, P12, P21, P23	HEADER W/SHUNT,2P,100LS

Copyright © 2008–2015, Texas Instruments Incorporated

Table 3. Bill of Materials (continued)

Item	MFG	MFG Part Number	RefDes	Value or Function
31	MOLEX	22-23-2021-P	P4, P24	MALE,2PIN,.100CC W/ FRICTION LOCK
32	MILL-MAX	350-10-103-00-006	P13, P18, P22	HEADER,THU,MAL,0.1LS,3P,1x3,284H,110TL
33	MOLEX	22-23-2041	P1	4P, VERT, FRICTION LOCK
34	TYCO ELECTRONICS	4-103239-0x3	P5, P11, P14, P15, P19, P20	HEADER,THU,MAL,0.1LS,3P,1x3
35	TI	AFE5804	DUT1	AFE5804 8-CH ULTRASOUND ANALOG FRONT END
36	MAXIM	MAX3221CAE	U2	RS-232 TRANSCEIVERS
37	MOTOROLA	MMBD7000LT1	D1, D2	DUAL SWITCHING DIODE
38	PHILIPS	BAP50-04	D3	PIN DIODE SOT 23 SINGLE JUNCTION
39	TI	TPS79633DCQR	U7(UNINSTALLED), U8	ULTRALOW-NOISE HI PSRR FAST RF 1-A LDO LINEAR REGULATOR,3.3V
40	TI/BURR-BROWN	OPA820IDBV	U1	UNITY-GAIN STABLE LOW NOISE VOLTAGE FEEDBACK OPAMP
41	TI	TPS79318DBV	U6	1.8V,ULTRALOW-NOISE HI PSRR FAST RF 200mA LDO LINEAR REGULATOR
42	TI	TPS79325DBV	U9	2.5V,ULTRALOW-NOISE HI PSRR FAST RF 200mA LDO LINEAR REGULATOR
43	FUTURE TECHNOLOGY DEVICE INT.	FT245RL	U10	USB FIFO IC INCORPORATE FTDICHIP-ID SECURITY DONGLE
44	PANASONIC	ELJFA221J	L1	220µH, 5%
45	TAIYO-YUDEN	LK 1608 330M	FB1, FB11, FB12	INDUCTOR,SMT0603,33.0µH,20%
46	PANASONIC	LNJ308G8PRA	LED1, LED2, LED3, LED5	LED,SMT,0603,PURE GREEN,2.03V
47	PANASONIC	LNJ808R8ERA	LED4	LED,SMT,0603,ORANGE,1.8V
48	ECS	ECS-3953M-400-BN	U5	OSC,SMT,3.3V,50ppm,–40~85C,5nS,40.000 MHz
49	PANASONIC	ERJ-2GE0R00X	R26, R27, R40, R42, R44, R48, R53, R55, R56, R63, R65	RESISTOR/JUMPER,SMT,0402,0 Ω,5%,1/16W
50	PANASONIC	ERJ-2GEJ0000(UN)	R6, R7, R29, R30, R31, R32, R34, R35, R36, R37, R39, R43, R46, R49, R54, R59, R60, R62, R64	UNINSTALLED PART
51	PANASONIC	ERJ-2GEJ131	R66, R69	RESISTOR, SMT, 0402, 130 Ω, ±1%, 1/16W
52	PANASONIC	ERJ-2GEJ49R9(UN)	R4, R9, R22	UNINSTALLED PART
53	PANASONIC	ERJ-2RKF5602X	R57	RESISTOR, SMT, 0402, 56K Ω, 1%, 1/16W
54	PANASONIC	ERJ-2GEJ820	R67, R68	RESISTOR, SMT, 0402, ±5%,82
55	PANASONIC	ERJ-2RKF1000X	R24, R25	RESISTOR,SMT,0402,100 Ω,1%,1/16W
56	PANASONIC	ERJ-2RKF1001X	R13, R14, R18, R47	RESISTOR,SMT,0402,1.00K,1%,1/16W
57	PANASONIC	ERJ-2RKF1002X	R33, R58	RESISTOR,SMT,0402,10.0K,1%,1/16W
58	PANASONIC	ERJ-2RKF2000X	R52	RES,SMT,0402,200 Ω,1%,1/16W
59	PANASONIC	ERJ-2RKF3320X	R16, R20, R38, R45	RES,SMT,0402,332 Ω,1%,1/16W
60	PANASONIC	ERJ-2RKF4020X	R8	RES,SMT,0402,402 Ω,1%,1/16W
61	PANASONIC	ERJ-2RKF4992X	R28	RESISTOR,SMT,0402,49.9K,1%,1/16W
62	PANASONIC	ERJ-2RKF49R9X	R1, R2, R3, R5, R10, R11, R15, R17, R21, R23, R61	RESISTOR,SMT,0402,49.9 Ω,1%,1/16W
63	PANASONIC	ERJ-2RKF7500X	R50, R51	RES,SMT,0402,750 Ω,1%,1/16W
64	VISHAY	CRCW06031742F	R19	RES,SMT,0603,17.4K Ω, 1%
65	PANASONIC	ERJ-6RQF5R1V	R41	SMT,RES,0805,1/8W, 1%, 5.1 Ω
66	PANASONIC	ERJ-1GE0R00C	EP3, EP5	RESISTOR,SMT,0201,THICK FILM,0 Ω,5%,0 Ω JUMPER,1/20W
67	C&K	TD06H0SK1	SW1, SW2	DIP SWITCH,SMT,6POS,SPST,MINIATURE
68	PANASONIC	EVQPE104K	S1	SQUARE LIGHT TOUCH SWITCH,SMT,SPST
69	KEYSTONE ELECTRONICS	5005	TP8	TESTPOINT,THU,COMPACT,0.125LS,130TL, RED
70	KEYSTONE ELECTRONICS	5006	TP1, TP2, TP5, TP6, TP10	TESTPOINT,THU,COMPACT,0.125LS,130TL, BLACK
71	KEYSTONE ELECTRONICS	5006(UN)	TP3, TP4, TP7, TP9	UNINSTALLED PART (TEST POINT)

Copyright © 2008–2015, Texas Instruments Incorporated

Table 3. Bill of Materials (continued)

Item	MFG	MFG Part Number	RefDes	Value or Function
72	KEYSTONE ELECTRONICS	5007	TP11	TESTPOINT,THU,COMPACT,0.125LS,130TL, WHITE
73	MINI-CIRCUITS	ADTI-6T	T1(UNINSTALLED), T2	RF TRANSFORMER WIDEBAND, 0.03-125 MHz
74	BOURNS	3296W-1-103	R12	TRIMPOT,THU,10K,10%,0.5W,100ppm,25T
75	AMP	531220-2	P3, P8, P12, P21, P23	SHUNTS
76	KEYSTONE ELECTRONICS	1892	H1,H2,H3,H4; (H3 and H4 are UNINSTALLED)	STANDOFF HEX 4-40 THR 0.375”L ALUM
77	BUILDING FASTENERS	PMS 440 0025 SL	H1,H2,H3,H4; (H3 and H4 are UNINSTALLED)	SCREW MACHINE SLOTTED 4-40x1/4

Copyright © 2008–2015, Texas Instruments Incorporated

5 Typical Performance

This section provides some typical performance characteristics of the AFE5804EVM to assist users in verifying their setup.

After analysis of the data file acquired by a logic analyzer, the SNR of the AFE5804 should be better than 59 dB when the PGA is set to 30 dB, the filter is set to 12.5 MHz, the mode is set to TGC1, and Vctnl is set as 1 V. A typical performance plot of the AFE5804 is shown in Figure 18.

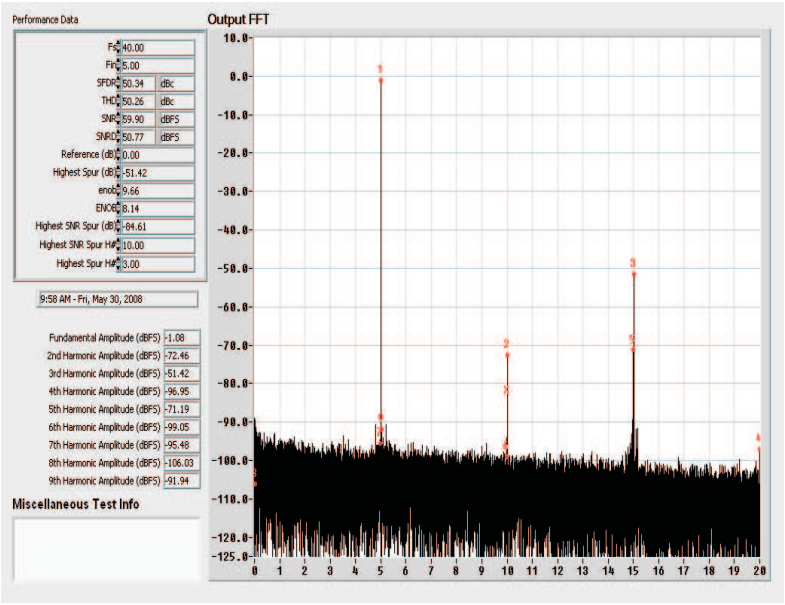

(a) PGA = 30 dB, Vcntl = 1 V, Vin = 11 mVpp

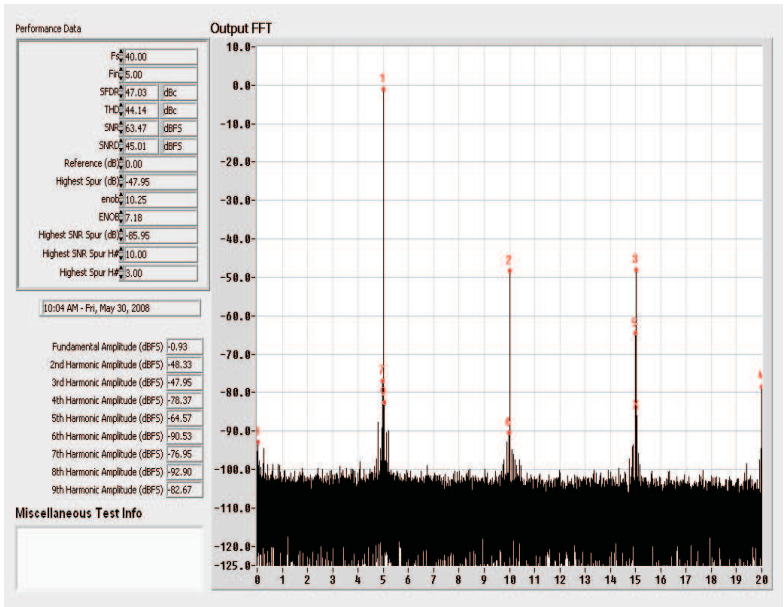

(b) PGA = 30 dB, Vcntl = 0.34 V, Vin = 290 mVpp

Figure 18. Typical Performances of AFE5804

As Figure 18 shows, the SNR degrades as the gain increases; the HD degrades as the input signal increases.

Copyright © 2008–2015, Texas Instruments Incorporated

TSW1400 for Evaluating AFE5804/5

This appendix describes the use of TSW1400 software to analyze data files acquired by logic analyzers.

As previously mentioned, coherent sampling is recommended when HP8644s are used. The calculation of coherent sampling rate and signal frequency can be found in the TSW1100 user's manual (SLWU087B).

Users can set the calculated frequencies for signal generators; acquire ADC data through a logic analyzer; and save the data as a text file. Following the steps in the order as indicated in the following figure to set the test condition.



Figure 19. User Interface: Step-by-Step setup

Copyright © 2008–2015, Texas Instruments Incorporated

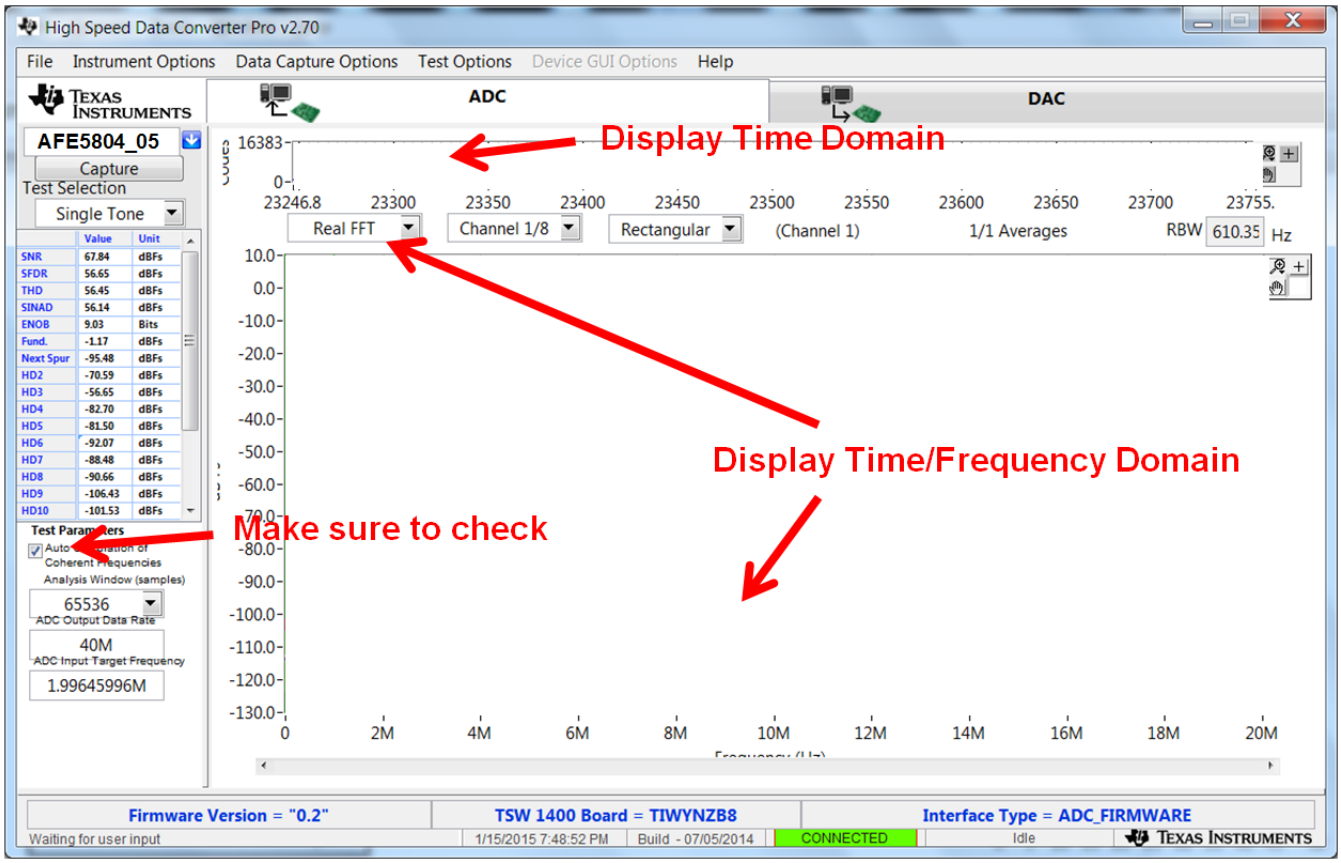

Figure 20. User Interface: Frequency Load Value to Signal Generator

Copyright © 2008–2015, Texas Instruments Incorporated

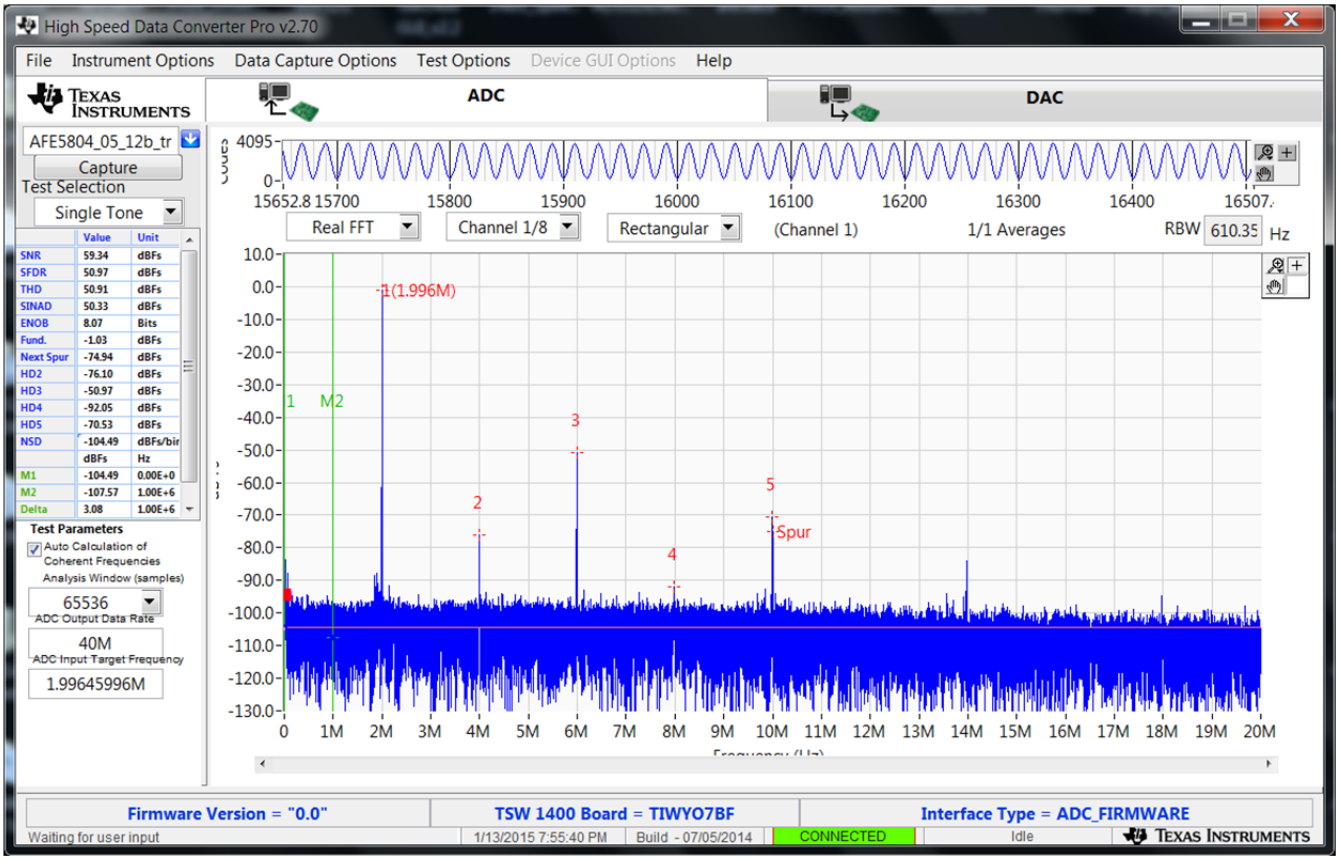

Figure 21. TSW1400 Interface

Copyright © 2008–2015, Texas Instruments Incorporated

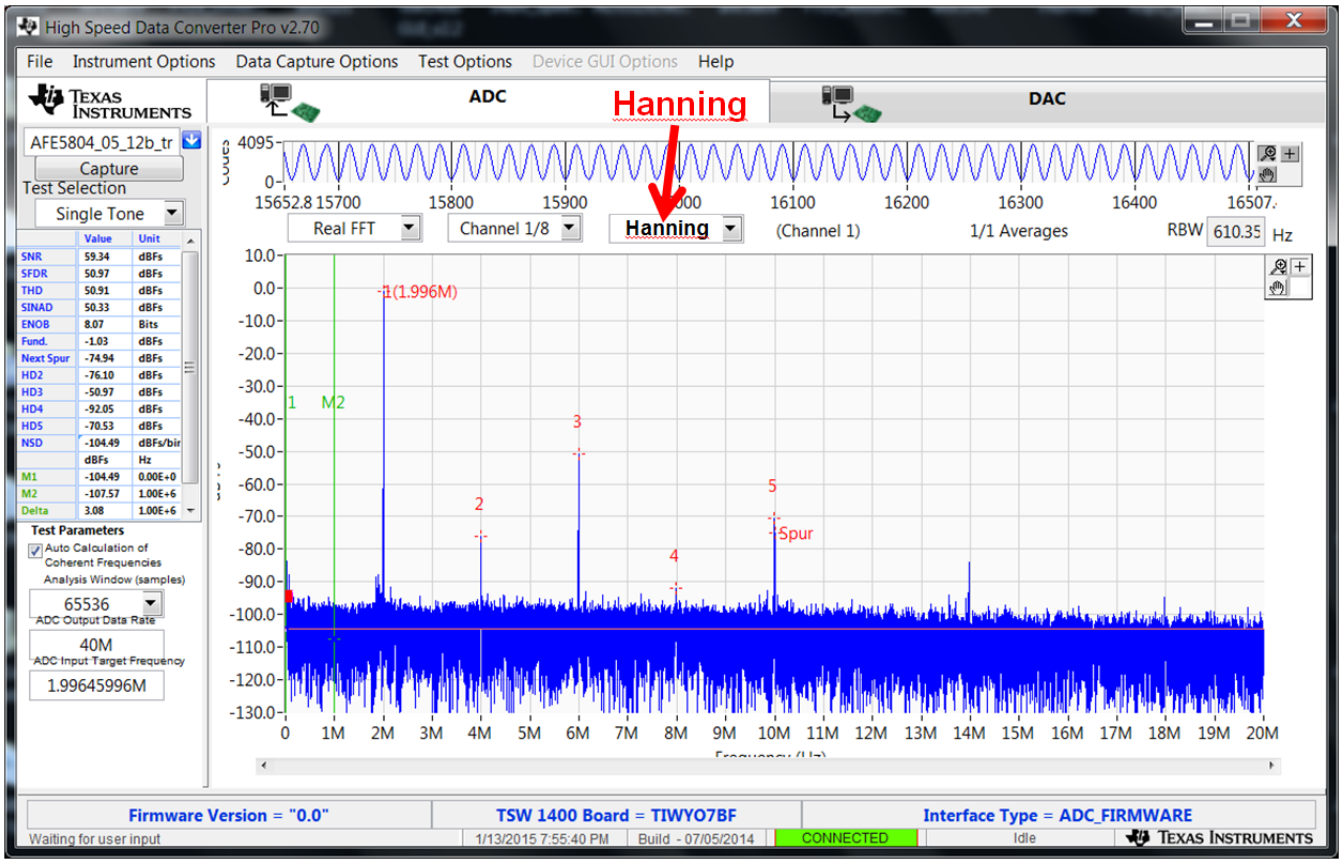

Figure 22. Analysis of Noncoherent Sampled Data

Copyright © 2008–2015, Texas Instruments Incorporated

High Speed Data Converter Pro (HSDCPro) GUI Installation

Download the HSDCPro GUI Installer using this link: HSDCPro GUI

- Unzip the saved folder and run the installer executable to obtain the pop-up shown in Figure 23.
- Click the *Install* button.

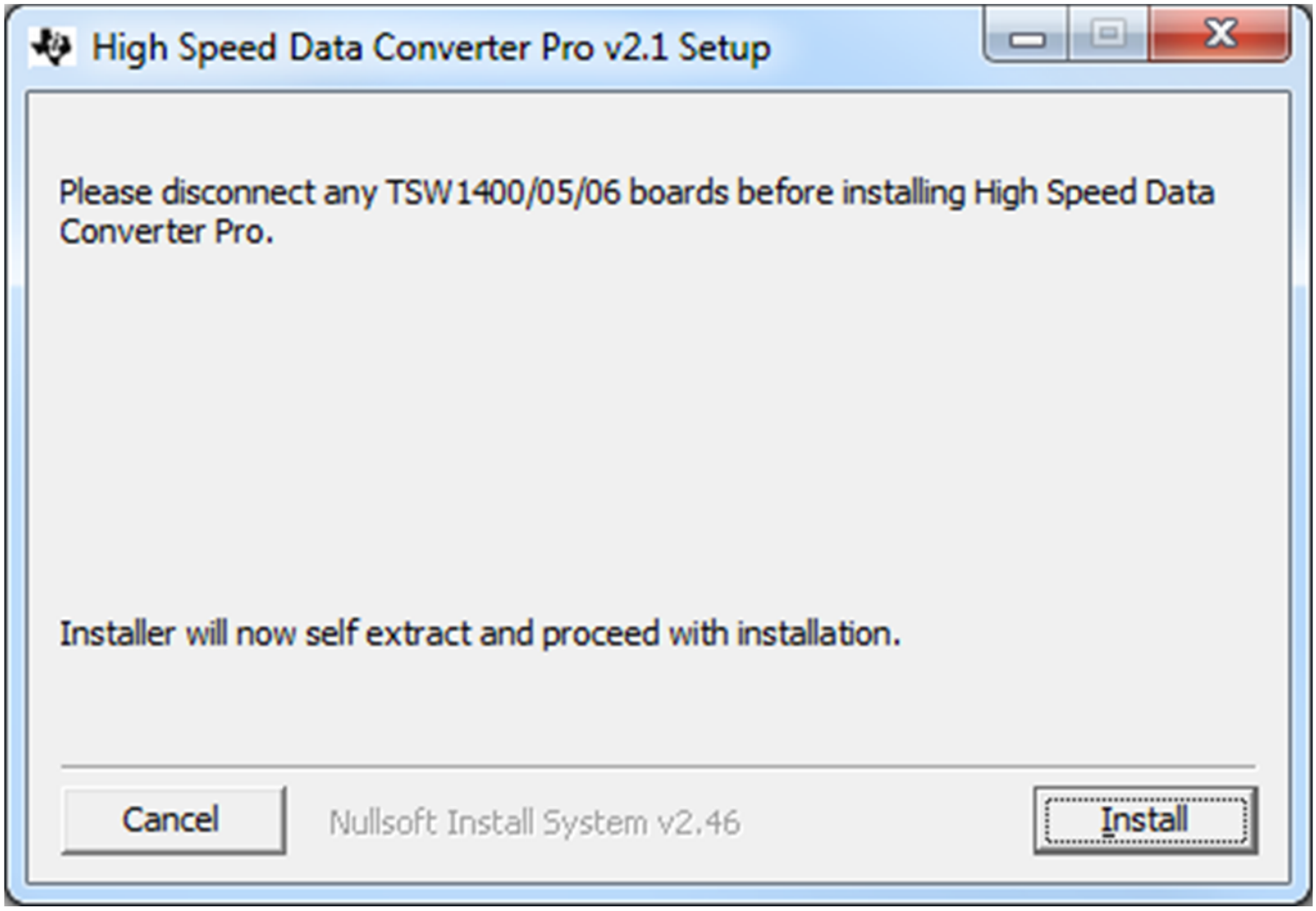

Figure 23. HSDCPro Install (Begin)

- Leave the destination directories as the default location, for the TSW1400GUI installation and press the NEXT button as shown in Figure 24.

Copyright © 2008–2015, Texas Instruments Incorporated

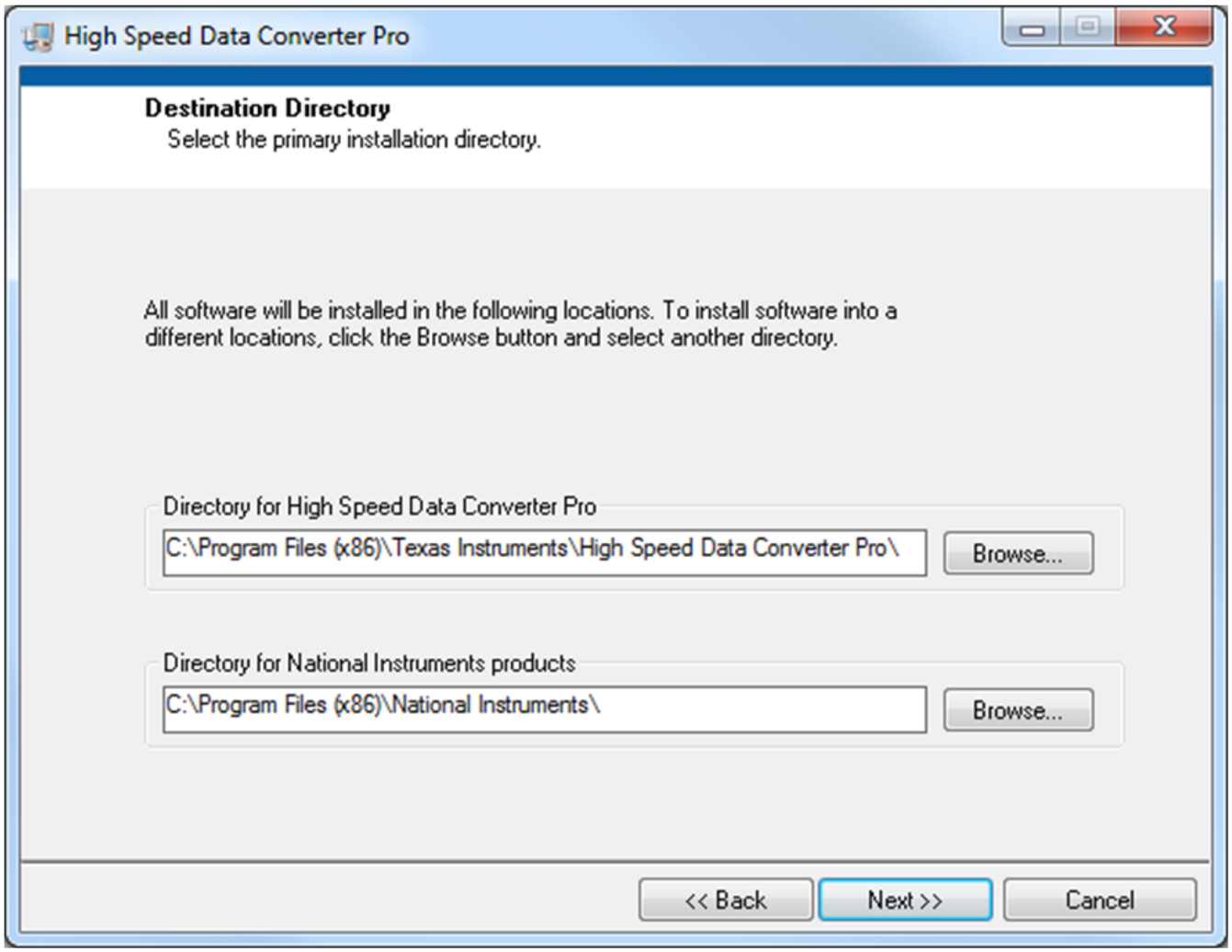

Figure 24. HSDCPro Install (Install Directory)

- Read the License Agreement from Texas Instruments and select *I accept the License Agreement* and press the *Next* button as shown in Figure 25.

Copyright © 2008–2015, Texas Instruments Incorporated

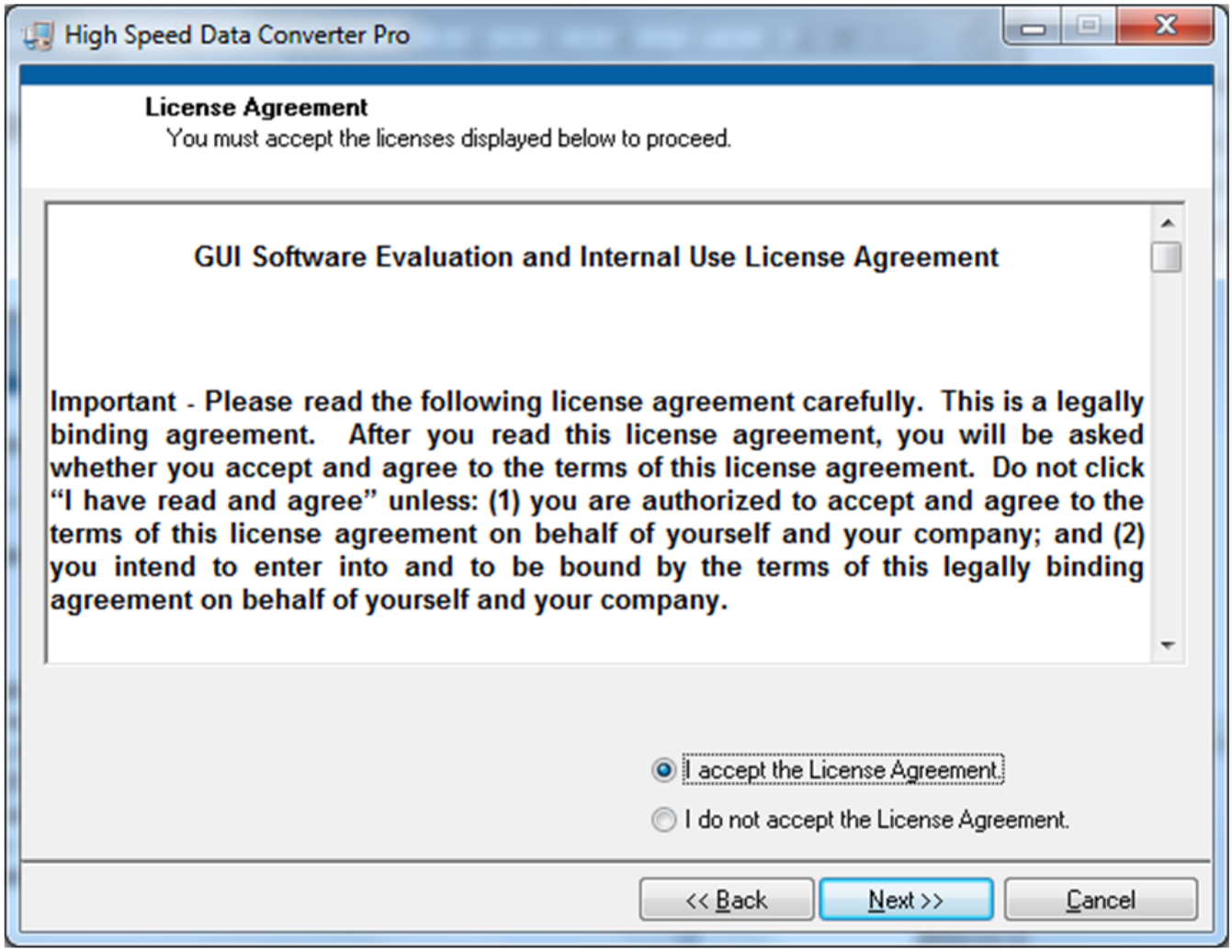

Figure 25. HSDCPro Install (TI License Agreement)

- Read the License Agreement from National Instruments and select *I accept the License Agreement* and press the *Next* button as shown in Figure 26.

Copyright © 2008–2015, Texas Instruments Incorporated

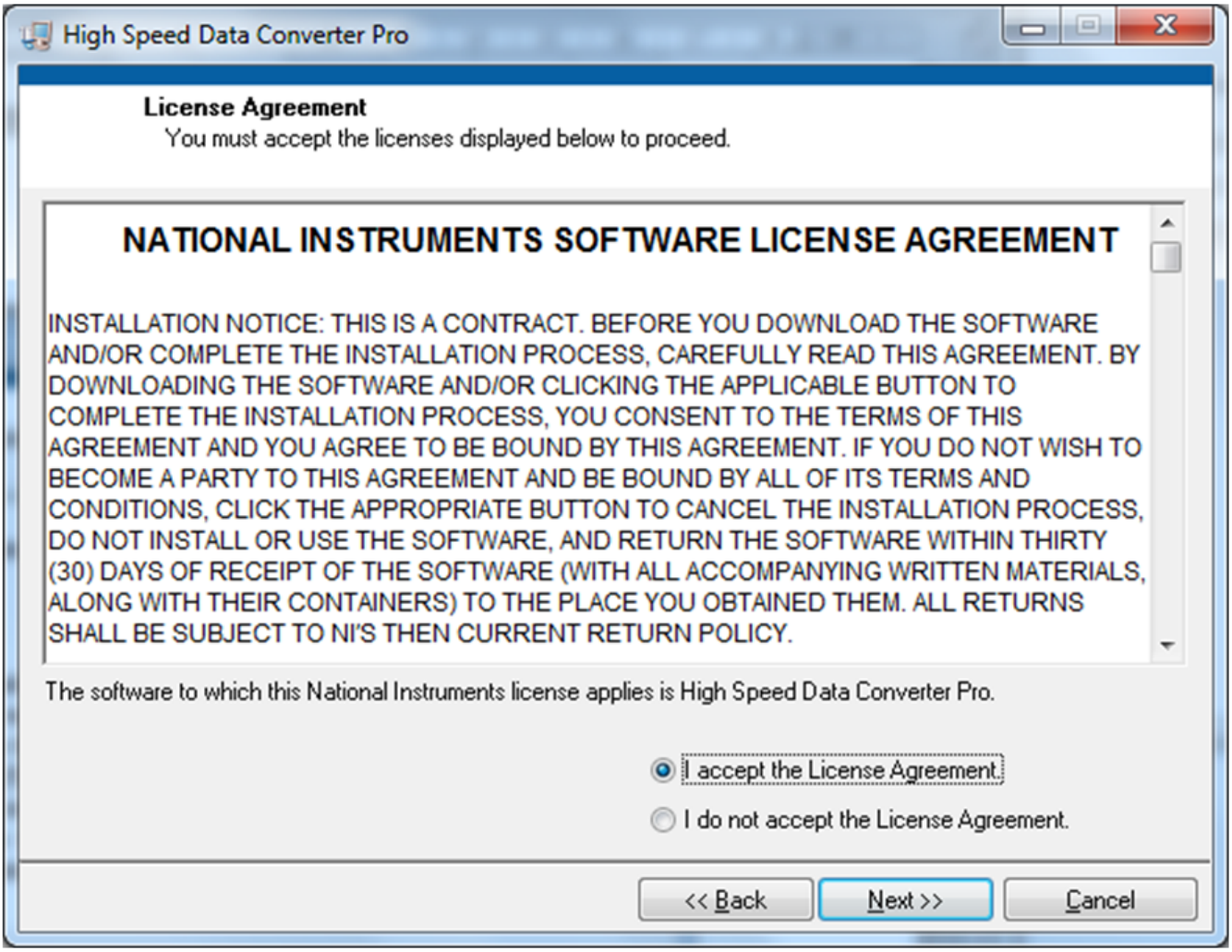

Figure 26. HSDCPro Install (NI License Agreement)

- Press the *Next* button as shown in Figure 27.

Copyright © 2008–2015, Texas Instruments Incorporated

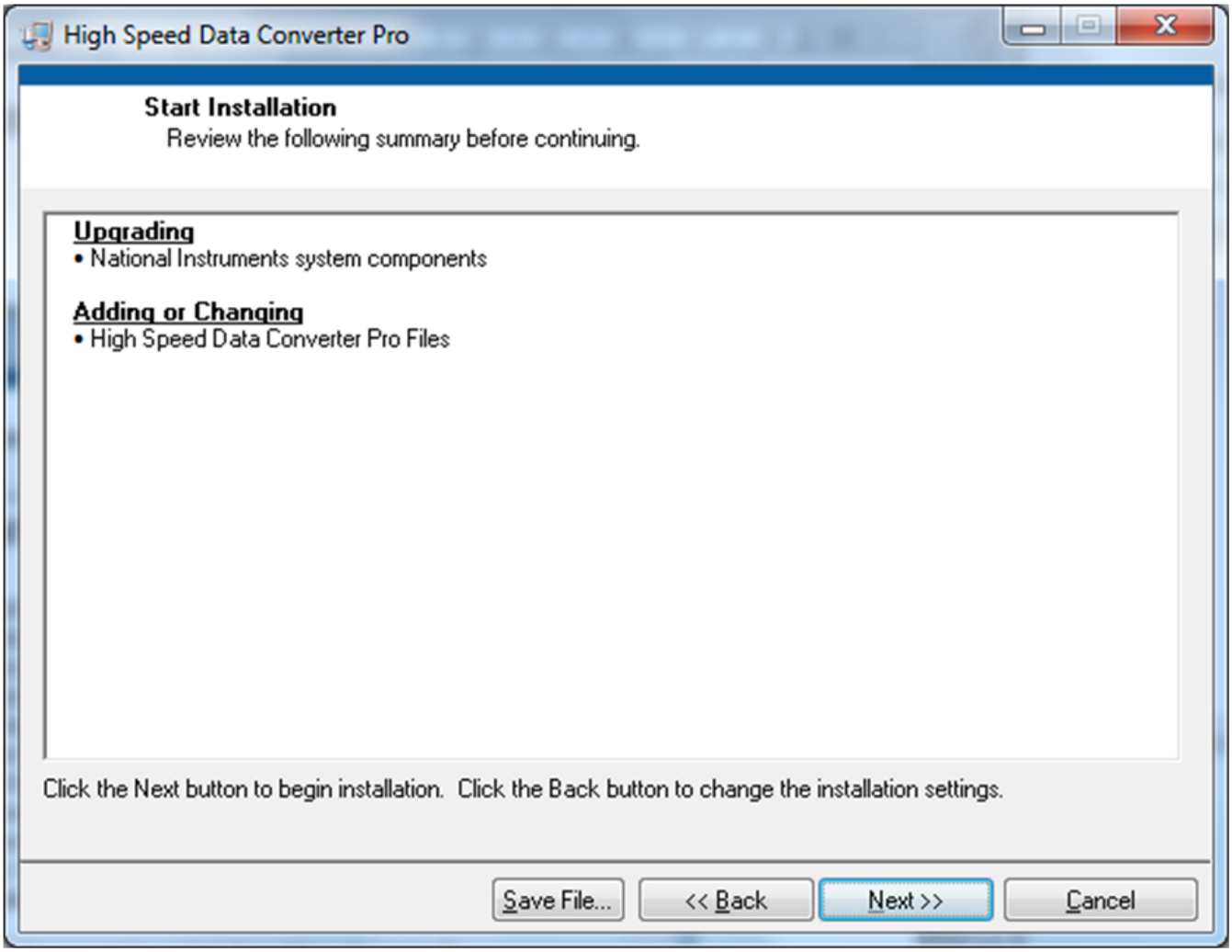

Figure 27. HSDCPro Install (Start Installation)

- The window shown in Figure 28 should appear indicating that the installation is in progress.

Copyright © 2008–2015, Texas Instruments Incorporated

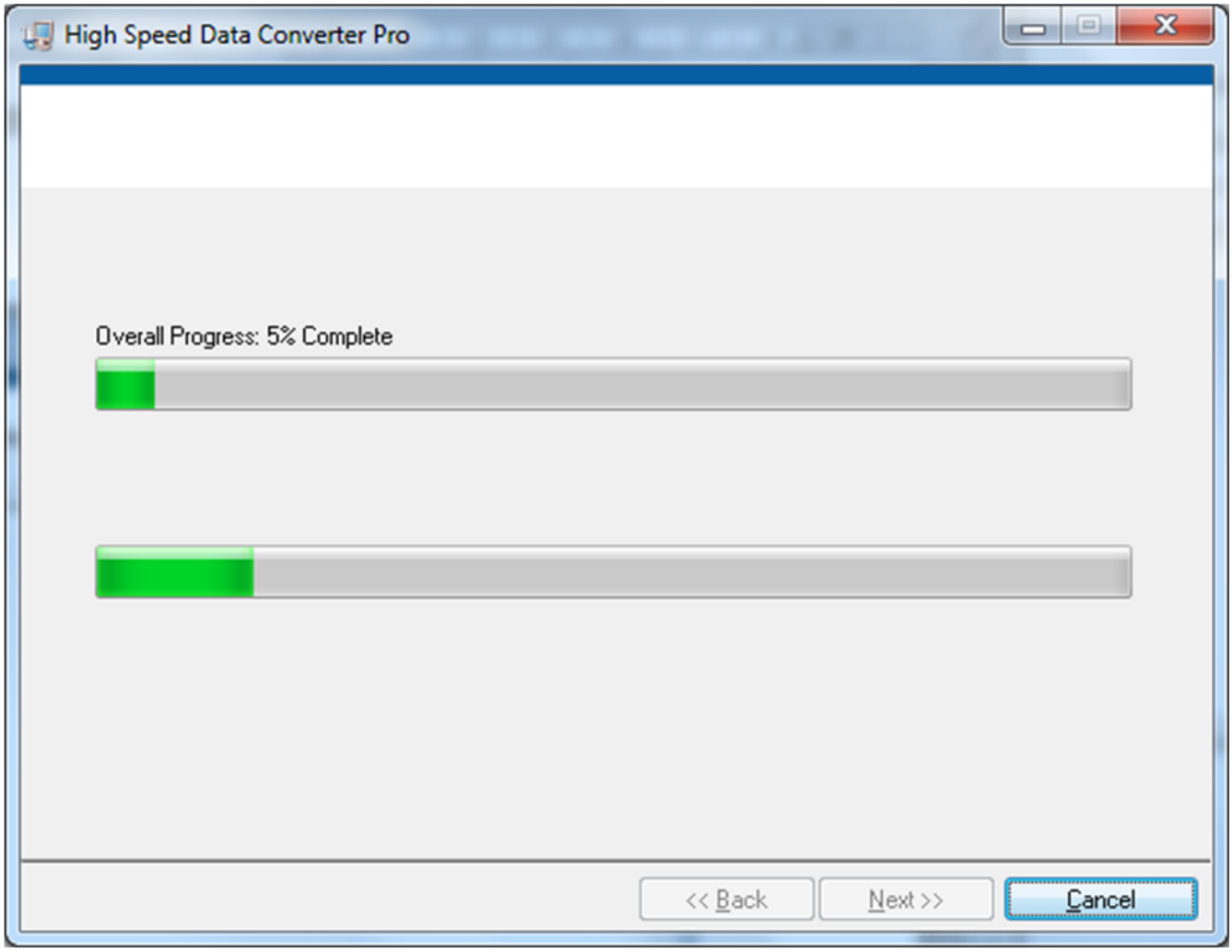

Figure 28. HSDCPro Install (Installation Progress)

- The window shown in Figure 29 appears indicating *Installation Complete*. Press the *Next* button.

Copyright © 2008–2015, Texas Instruments Incorporated

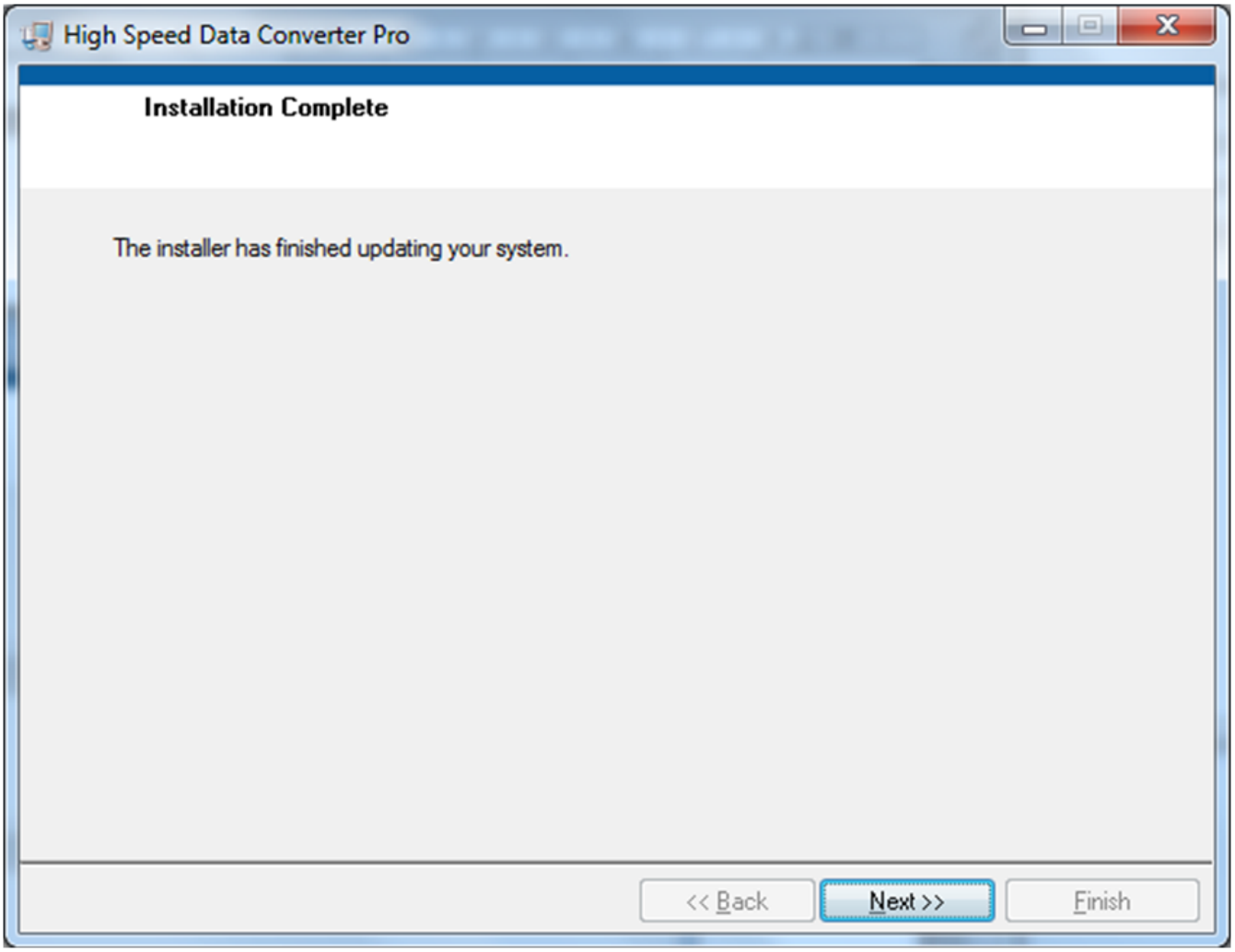

Figure 29. HSDCPro Install (Installation Complete)

- The window shown in Figure 30 appears briefly to complete the process.

Copyright © 2008–2015, Texas Instruments Incorporated

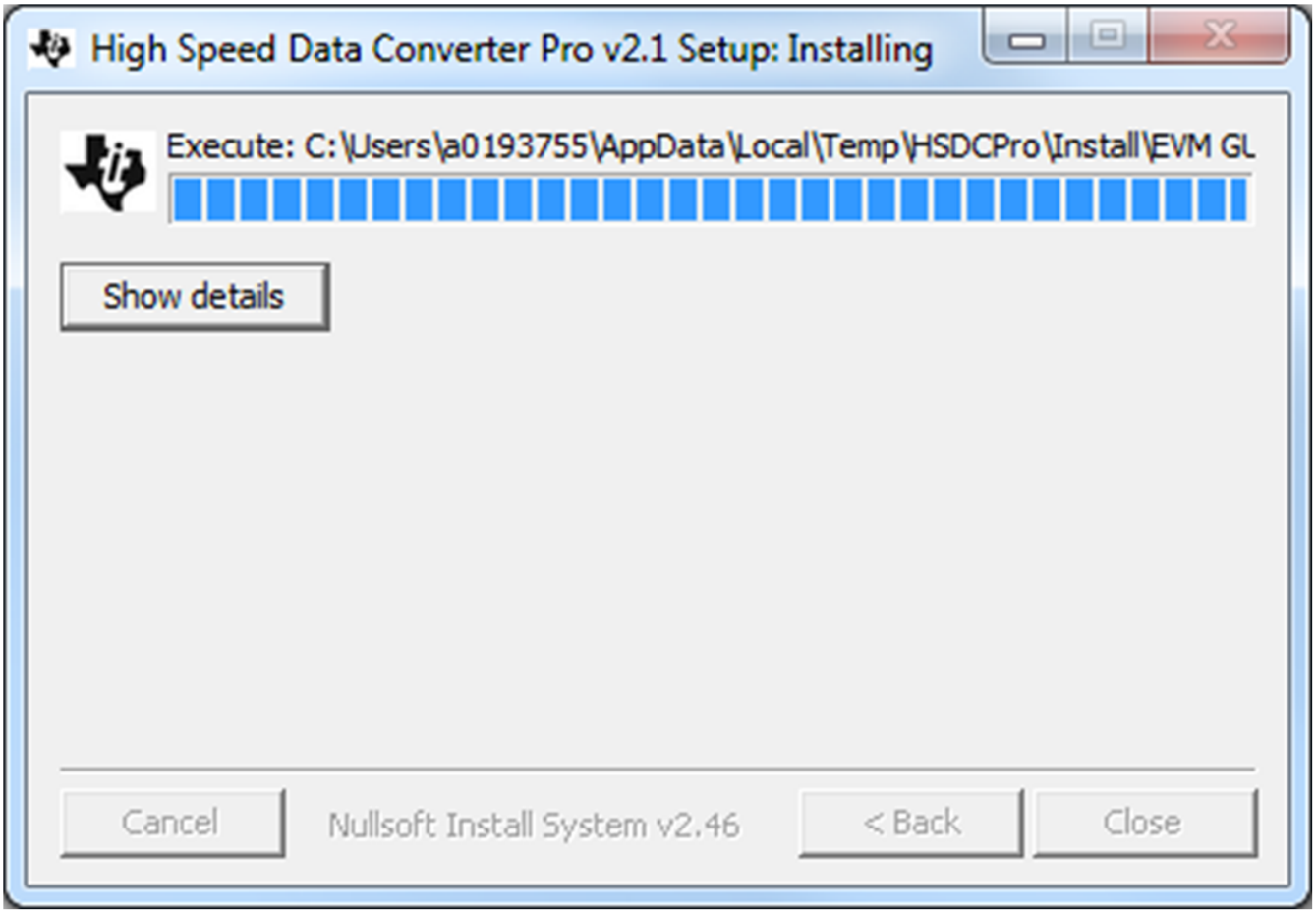

Figure 30. HSDCPro Install (h)

- As shown in Figure 31 a restart might be requested depending on whether or not the PC already had the National Instruments MCR Installer. If requested, hit the *Restart* button to complete the installation.

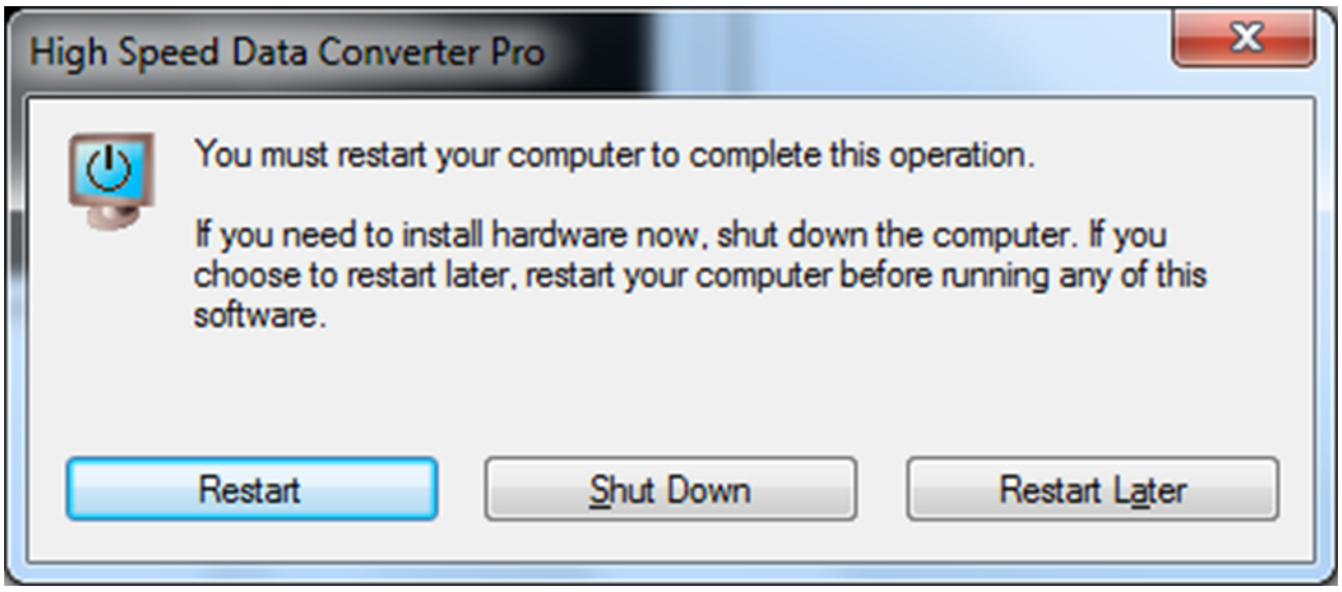

Figure 31. HSDCPro Install

Copyright © 2008–2015, Texas Instruments Incorporated

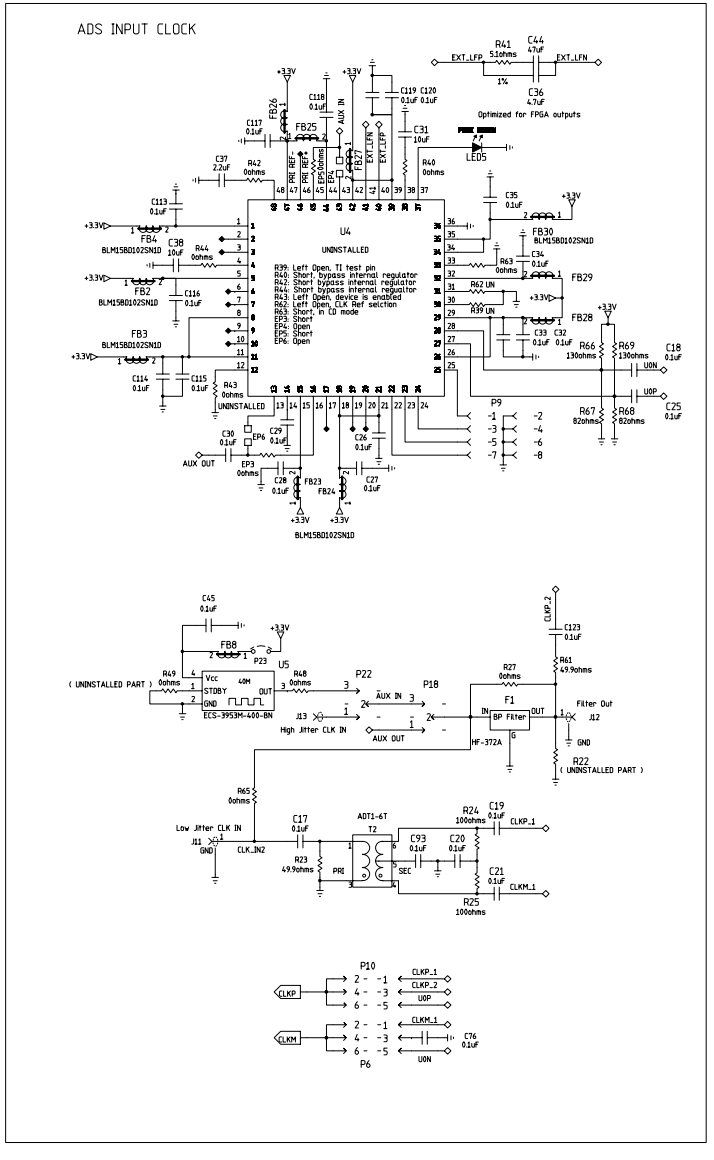
ADS INPUT CLOCK
U4
UNINSTALLED
R39: Left Open, TI test pin
R40: Short, bypass internal regulator
R42: Short bypass internal regulator
R44: Short bypass internal regulator
R43: Left Open, device is enabled
R62: Left Open, CLK Ref selction
R63: Short, in CD mode
EP3: Short
EP4: Open
EP5: Short
EP6: Open
Optimized for FPGA outputs
LED5
BLM15BD102SN1D
U5
ECS-3953M-400-BN
(UNINSTALLED PART)
High Jitter CLK IN
Low Jitter CLK IN
BP Filter
HF-372A
ADT1-6T
P10
P6
CLKP
CLKM
CLKP_1
CLKP_2
CLKM_1
U0N
U0P

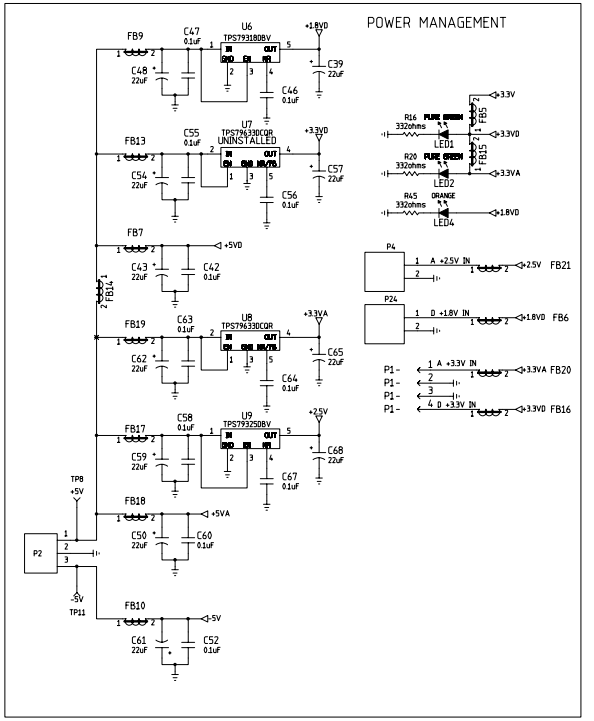
POWER MANAGEMENT
U6
TPS79318DBV
U7
TPS79633DCQR
UNINSTALLED
U8
TPS79633DCQR
U9
TPS79325DBV
FB14
P2
TP8
TP11
LED1
LED2
LED4
FB21
FB6
FB20
FB16

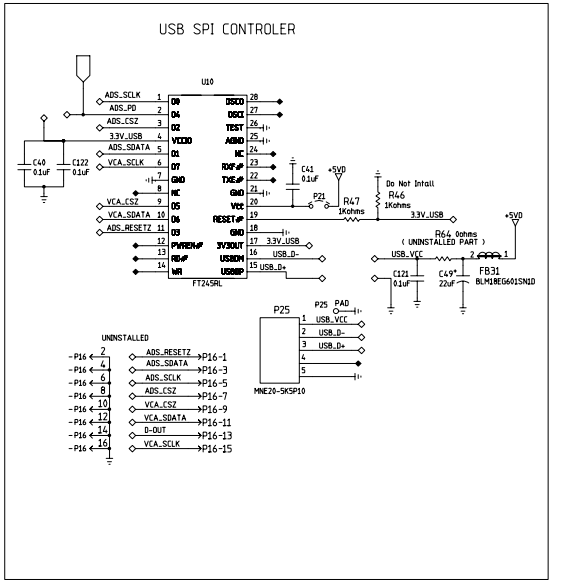
USB SPI CONTROLER
U10
FT245RL
Do Not Intall
(UNINSTALLED PART)
FB31
BLM18EG601SN1D
P25
MNE20-5K5P10
UNINSTALLED

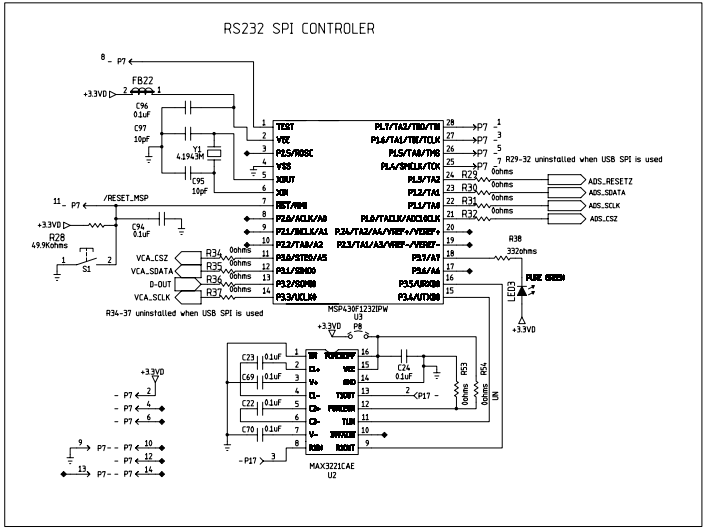
RS232 SPI CONTROLER
FB22
R29-32 uninstalled when USB SPI is used
R34-37 uninstalled when USB SPI is used
MSP430F1232IPW
U3
MAX3221CAE
U2
LED3

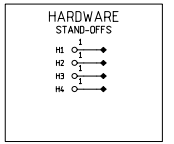
HARDWARE
STAND-OFFS
H1
H2
H3
H4

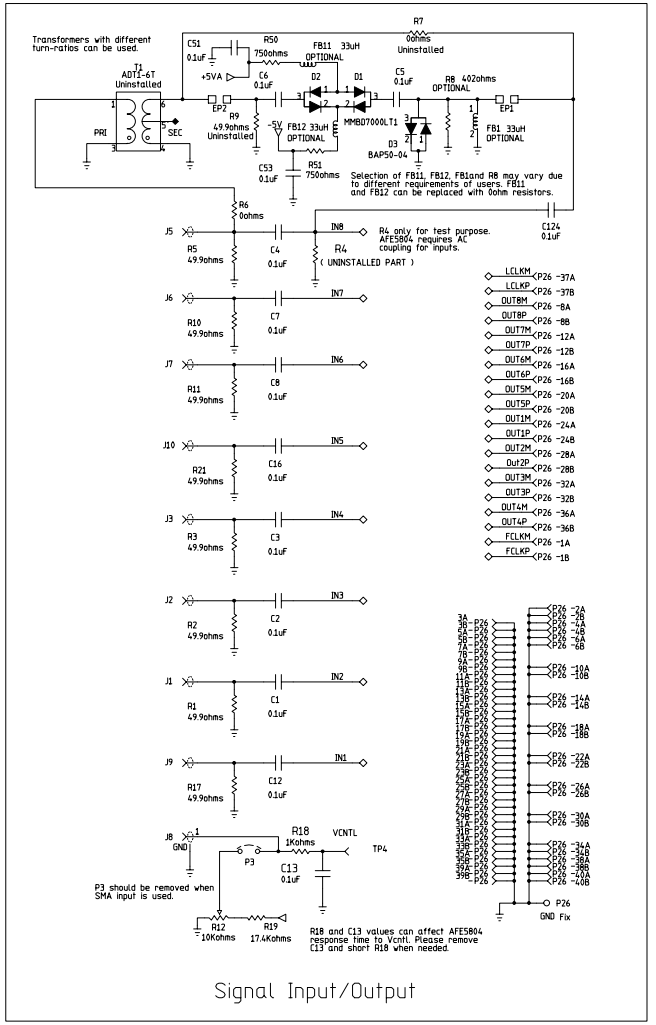
Transformers with different turn-ratios can be used.
T1 ADT1-6T Uninstalled
PRI
SEC
C51 0.1uF
+5VA
R50 750ohms
FB11 33uH OPTIONAL
R7 0ohms Uninstalled
C6 0.1uF
D2
D1
MMBD7000LT1
C5 0.1uF
R8 402ohms OPTIONAL
EP2
EP1
R9 49.9ohms Uninstalled
-5V
FB12 33uH OPTIONAL
D3 BAP50-04
FB1 33uH OPTIONAL
C53 0.1uF
R51 750ohms
Selection of FB11, FB12, FB1and R8 may vary due to different requirements of users. FB11 and FB12 can be replaced with 0ohm resistors.
R6 0ohms
C124 0.1uF
J5
IN8
R5 49.9ohms
C4 0.1uF
R4 (UNINSTALLED PART)
R4 only for test purpose. AFE5804 requires AC coupling for inputs.
J6
IN7
R10 49.9ohms
C7 0.1uF
J7
IN6
R11 49.9ohms
C8 0.1uF
J10
IN5
R21 49.9ohms
C16 0.1uF
J3
IN4
R3 49.9ohms
C3 0.1uF
J2
IN3
R2 49.9ohms
C2 0.1uF
J1
IN2
R1 49.9ohms
C1 0.1uF
J9
IN1
R17 49.9ohms
C12 0.1uF
LCLKM P26 -37A
LCLKP P26 -37B
OUT8M P26 -8A
OUT8P P26 -8B
OUT7M P26 -12A
OUT7P P26 -12B
OUT6M P26 -16A
OUT6P P26 -16B
OUT5M P26 -20A
OUT5P P26 -20B
OUT1M P26 -24A
OUT1P P26 -24B
OUT2M P26 -28A
OUT2P P26 -28B
OUT3M P26 -32A
OUT3P P26 -32B
OUT4M P26 -36A
OUT4P P26 -36B
FCLKM P26 -1A
FCLKP P26 -1B
P26 -2A
P26 -2B
P26 -4A
P26 -4B
P26 -6A
P26 -6B
P26 -10A
P26 -10B
P26 -14A
P26 -14B
P26 -18A
P26 -18B
P26 -22A
P26 -22B
P26 -26A
P26 -26B
P26 -30A
P26 -30B
P26 -34A
P26 -34B
P26 -38A
P26 -38B
P26 -40A
P26 -40B
P26
GND Fix
J8
GND
R18 1Kohms
VCNTL
TP4
P3
C13 0.1uF
P3 should be removed when SMA input is used.
R12 10Kohms
R19 17.4Kohms
R18 and C13 values can affect AFE5804 response time to Vcntl. Please remove C13 and short R18 when needed.
Signal Input/Output

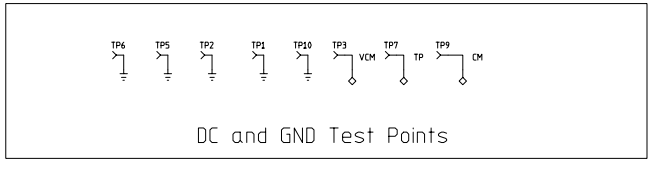
TP6
TP5
TP2
TP1
TP10
TP3
VCM
TP7
TP
TP9
CM
DC and GND Test Points

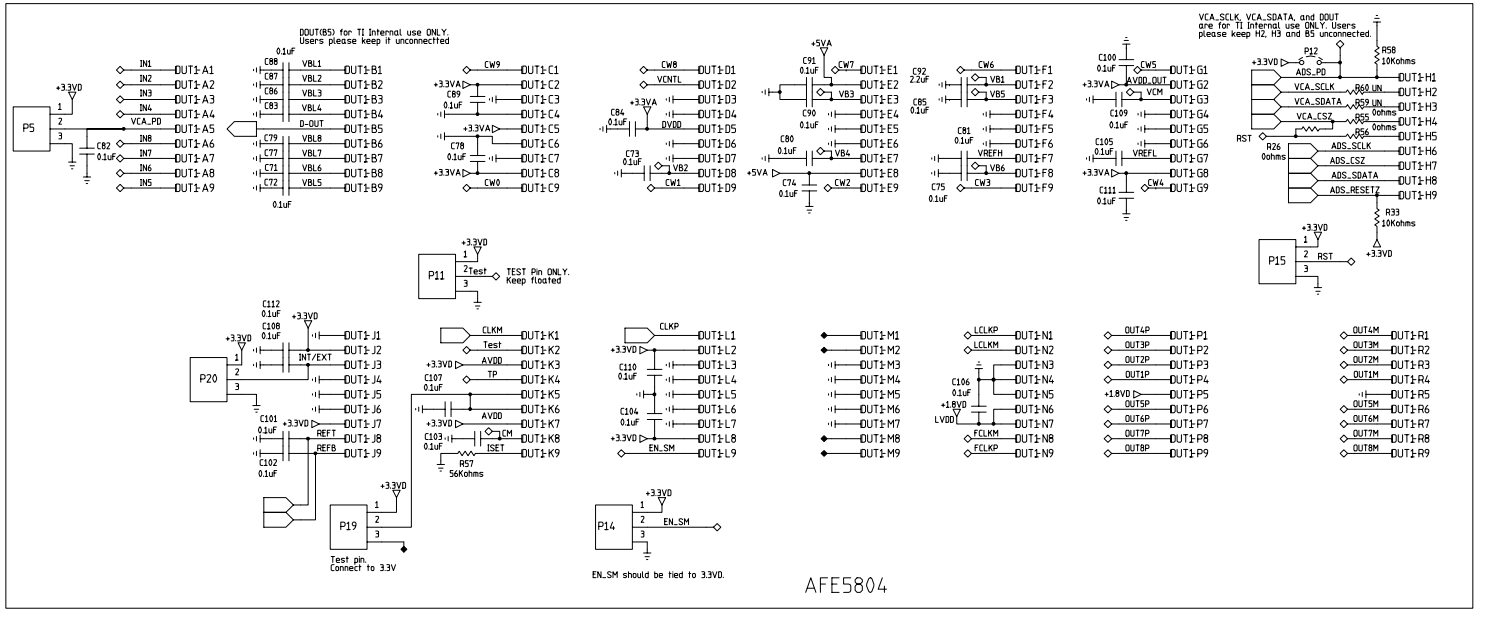
DOUT(B5) for TI Internal use ONLY. Users please keep it unconnected
VCA_SCLK, VCA_SDATA, and DOUT are for TI Internal use ONLY. Users please keep HZ, H3 and B5 unconnected.
P5
VCA_PD
P11
Test
TEST Pin ONLY. Keep floated
P20
INT/EXT
P19
Test pin. Connect to 3.3V
P14
EN_SM
EN_SM should be tied to 3.3VD.
P12
ADS_PD
VCA_SCLK
VCA_SDATA
VCA_CSZ
ADS_SCLK
ADS_CSZ
ADS_SDATA
ADS_RESET
P15
RST
AFE5804

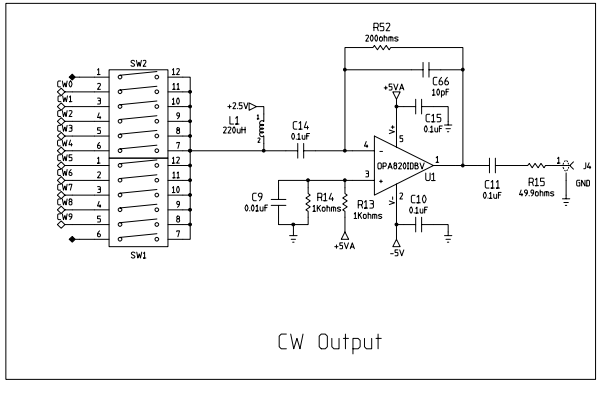
SW2
SW1
R52 200ohms
C66 10pF
C15 0.1uF
+2.5V
L1 220uH
C14 0.1uF
OPA820IDBV
U1
C9 0.01uF
R14 1Kohms
R13 1Kohms
C10 0.1uF
C11 0.1uF
R15 49.9ohms
J4
GND
CW Output

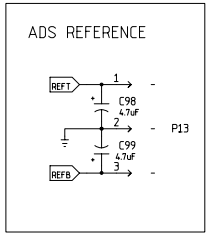
ADS REFERENCE
REFT
REFB
C98 4.7uF
C99 4.7uF
P13

Revision History

Changes from Original (September 2008) to A Revision **Page**

- Changed *Default Setup for Jumpers* image..... 6
- Changed Appendix A to TSW1400 software. 24
- Added Appendix B: High Speed Data Converter Pro (HSDCPro) GUI Installation. 28

NOTE: Page numbers for previous revisions may differ from page numbers in the current version.

Copyright © 2008–2015, Texas Instruments Incorporated

STANDARD TERMS AND CONDITIONS FOR EVALUATION MODULES

1. *Delivery:* TI delivers TI evaluation boards, kits, or modules, including any accompanying demonstration software, components, or documentation (collectively, an “EVM” or “EVMs”) to the User (“User”) in accordance with the terms and conditions set forth herein. Acceptance of the EVM is expressly subject to the following terms and conditions.

   1.1 EVMs are intended solely for product or software developers for use in a research and development setting to facilitate feasibility evaluation, experimentation, or scientific analysis of TI semiconductors products. EVMs have no direct function and are not finished products. EVMs shall not be directly or indirectly assembled as a part or subassembly in any finished product. For clarification, any software or software tools provided with the EVM (“Software”) shall not be subject to the terms and conditions set forth herein but rather shall be subject to the applicable terms and conditions that accompany such Software

   1.2 EVMs are not intended for consumer or household use. EVMs may not be sold, sublicensed, leased, rented, loaned, assigned, or otherwise distributed for commercial purposes by Users, in whole or in part, or used in any finished product or production system.

2 *Limited Warranty and Related Remedies/Disclaimers*:

   2.1 These terms and conditions do not apply to Software. The warranty, if any, for Software is covered in the applicable Software License Agreement.

   2.2 TI warrants that the TI EVM will conform to TI's published specifications for ninety (90) days after the date TI delivers such EVM to User. Notwithstanding the foregoing, TI shall not be liable for any defects that are caused by neglect, misuse or mistreatment by an entity other than TI, including improper installation or testing, or for any EVMs that have been altered or modified in any way by an entity other than TI. Moreover, TI shall not be liable for any defects that result from User's design, specifications or instructions for such EVMs. Testing and other quality control techniques are used to the extent TI deems necessary or as mandated by government requirements. TI does not test all parameters of each EVM.

   2.3 If any EVM fails to conform to the warranty set forth above, TI's sole liability shall be at its option to repair or replace such EVM, or credit User's account for such EVM. TI's liability under this warranty shall be limited to EVMs that are returned during the warranty period to the address designated by TI and that are determined by TI not to conform to such warranty. If TI elects to repair or replace such EVM, TI shall have a reasonable time to repair such EVM or provide replacements. Repaired EVMs shall be warranted for the remainder of the original warranty period. Replaced EVMs shall be warranted for a new full ninety (90) day warranty period.

3 *Regulatory Notices:*

   3.1 *United States*

      3.1.1 *Notice applicable to EVMs not FCC-Approved:*

      This kit is designed to allow product developers to evaluate electronic components, circuitry, or software associated with the kit to determine whether to incorporate such items in a finished product and software developers to write software applications for use with the end product. This kit is not a finished product and when assembled may not be resold or otherwise marketed unless all required FCC equipment authorizations are first obtained. Operation is subject to the condition that this product not cause harmful interference to licensed radio stations and that this product accept harmful interference. Unless the assembled kit is designed to operate under part 15, part 18 or part 95 of this chapter, the operator of the kit must operate under the authority of an FCC license holder or must secure an experimental authorization under part 5 of this chapter.

      3.1.2 *For EVMs annotated as FCC – FEDERAL COMMUNICATIONS COMMISSION Part 15 Compliant:*

      CAUTION

      This device complies with part 15 of the FCC Rules. Operation is subject to the following two conditions: (1) This device may not cause harmful interference, and (2) this device must accept any interference received, including interference that may cause undesired operation.

      Changes or modifications not expressly approved by the party responsible for compliance could void the user's authority to operate the equipment.

      FCC Interference Statement for Class A EVM devices

      NOTE: This equipment has been tested and found to comply with the limits for a Class A digital device, pursuant to part 15 of the FCC Rules. These limits are designed to provide reasonable protection against harmful interference when the equipment is operated in a commercial environment. This equipment generates, uses, and can radiate radio frequency energy and, if not installed and used in accordance with the instruction manual, may cause harmful interference to radio communications. Operation of this equipment in a residential area is likely to cause harmful interference in which case the user will be required to correct the interference at his own expense.

FCC Interference Statement for Class B EVM devices

NOTE: This equipment has been tested and found to comply with the limits for a Class B digital device, pursuant to part 15 of the FCC Rules. These limits are designed to provide reasonable protection against harmful interference in a residential installation. This equipment generates, uses and can radiate radio frequency energy and, if not installed and used in accordance with the instructions, may cause harmful interference to radio communications. However, there is no guarantee that interference will not occur in a particular installation. If this equipment does cause harmful interference to radio or television reception, which can be determined by turning the equipment off and on, the user is encouraged to try to correct the interference by one or more of the following measures:

- *Reorient or relocate the receiving antenna.*
- *Increase the separation between the equipment and receiver.*
- *Connect the equipment into an outlet on a circuit different from that to which the receiver is connected.*
- *Consult the dealer or an experienced radio/TV technician for help.*

3.2 *Canada*

3.2.1 *For EVMs issued with an Industry Canada Certificate of Conformance to RSS-210*

Concerning EVMs Including Radio Transmitters:

This device complies with Industry Canada license-exempt RSS standard(s). Operation is subject to the following two conditions: (1) this device may not cause interference, and (2) this device must accept any interference, including interference that may cause undesired operation of the device.

Concernant les EVMs avec appareils radio:

Le présent appareil est conforme aux CNR d'Industrie Canada applicables aux appareils radio exempts de licence. L'exploitation est autorisée aux deux conditions suivantes: (1) l'appareil ne doit pas produire de brouillage, et (2) l'utilisateur de l'appareil doit accepter tout brouillage radioélectrique subi, même si le brouillage est susceptible d'en compromettre le fonctionnement.

Concerning EVMs Including Detachable Antennas:

Under Industry Canada regulations, this radio transmitter may only operate using an antenna of a type and maximum (or lesser) gain approved for the transmitter by Industry Canada. To reduce potential radio interference to other users, the antenna type and its gain should be so chosen that the equivalent isotropically radiated power (e.i.r.p.) is not more than that necessary for successful communication. This radio transmitter has been approved by Industry Canada to operate with the antenna types listed in the user guide with the maximum permissible gain and required antenna impedance for each antenna type indicated. Antenna types not included in this list, having a gain greater than the maximum gain indicated for that type, are strictly prohibited for use with this device.

Concernant les EVMs avec antennes détachables

Conformément à la réglementation d'Industrie Canada, le présent émetteur radio peut fonctionner avec une antenne d'un type et d'un gain maximal (ou inférieur) approuvé pour l'émetteur par Industrie Canada. Dans le but de réduire les risques de brouillage radioélectrique à l'intention des autres utilisateurs, il faut choisir le type d'antenne et son gain de sorte que la puissance isotrope rayonnée équivalente (p.i.r.e.) ne dépasse pas l'intensité nécessaire à l'établissement d'une communication satisfaisante. Le présent émetteur radio a été approuvé par Industrie Canada pour fonctionner avec les types d'antenne énumérés dans le manuel d'usage et ayant un gain admissible maximal et l'impédance requise pour chaque type d'antenne. Les types d'antenne non inclus dans cette liste, ou dont le gain est supérieur au gain maximal indiqué, sont strictement interdits pour l'exploitation de l'émetteur

3.3 *Japan*

3.3.1 *Notice for EVMs delivered in Japan:* Please see http://www.tij.co.jp/lsds/ti_ja/general/eStore/notice_01.page 日本国内に輸入される評価用キット、ボードについては、次のところをご覧ください。
http://www.tij.co.jp/lsds/ti_ja/general/eStore/notice_01.page

3.3.2 *Notice for Users of EVMs Considered "Radio Frequency Products" in Japan:* EVMs entering Japan are NOT certified by TI as conforming to Technical Regulations of Radio Law of Japan.

If User uses EVMs in Japan, User is required by Radio Law of Japan to follow the instructions below with respect to EVMs:

1. Use EVMs in a shielded room or any other test facility as defined in the notification #173 issued by Ministry of Internal Affairs and Communications on March 28, 2006, based on Sub-section 1.1 of Article 6 of the Ministry's Rule for Enforcement of Radio Law of Japan,
2. Use EVMs only after User obtains the license of Test Radio Station as provided in Radio Law of Japan with respect to EVMs, or
3. Use of EVMs only after User obtains the Technical Regulations Conformity Certification as provided in Radio Law of Japan with respect to EVMs. Also, do not transfer EVMs, unless User gives the same notice above to the transferee. Please note that if User does not follow the instructions above, User will be subject to penalties of Radio Law of Japan.

【無線電波を送信する製品の開発キットをお使いになる際の注意事項】

本開発キットは技術基準適合証明を受けておりません。

本製品のご使用に際しては、電波法遵守のため、以下のいずれかの措置を取っていただく必要がありますのでご注意ください。

1. 電波法施行規則第6条第1項第1号に基づく平成18年3月28日総務省告示第173号で定められた電波暗室等の試験設備でご使用いただく。
2. 実験局の免許を取得後ご使用いただく。
3. 技術基準適合証明を取得後ご使用いただく。

なお、本製品は、上記の「ご使用にあたっての注意」を譲渡先、移転先に通知しない限り、譲渡、移転できないものとします。

上記を遵守頂けない場合は、電波法の罰則が適用される可能性があることをご留意ください。

日本テキサス・インスツルメンツ株式会社

東京都新宿区西新宿６丁目２４番１号

西新宿三井ビル

3.3.3 *Notice for EVMs for Power Line Communication:* Please see http://www.tij.co.jp/lsds/ti_ja/general/eStore/notice_02.page

電力線搬送波通信についての開発キットをお使いになる際の注意事項については、次のところをご覧ください。http://www.tij.co.jp/lsds/ti_ja/general/eStore/notice_02.page

4 *EVM Use Restrictions and Warnings:*

4.1 EVMS ARE NOT FOR USE IN FUNCTIONAL SAFETY AND/OR SAFETY CRITICAL EVALUATIONS, INCLUDING BUT NOT LIMITED TO EVALUATIONS OF LIFE SUPPORT APPLICATIONS.

4.2 User must read and apply the user guide and other available documentation provided by TI regarding the EVM prior to handling or using the EVM, including without limitation any warning or restriction notices. The notices contain important safety information related to, for example, temperatures and voltages.

4.3 *Safety-Related Warnings and Restrictions:*

4.3.1 User shall operate the EVM within TI's recommended specifications and environmental considerations stated in the user guide, other available documentation provided by TI, and any other applicable requirements and employ reasonable and customary safeguards. Exceeding the specified performance ratings and specifications (including but not limited to input and output voltage, current, power, and environmental ranges) for the EVM may cause personal injury or death, or property damage. If there are questions concerning performance ratings and specifications, User should contact a TI field representative prior to connecting interface electronics including input power and intended loads. Any loads applied outside of the specified output range may also result in unintended and/or inaccurate operation and/or possible permanent damage to the EVM and/or interface electronics. Please consult the EVM user guide prior to connecting any load to the EVM output. If there is uncertainty as to the load specification, please contact a TI field representative. During normal operation, even with the inputs and outputs kept within the specified allowable ranges, some circuit components may have elevated case temperatures. These components include but are not limited to linear regulators, switching transistors, pass transistors, current sense resistors, and heat sinks, which can be identified using the information in the associated documentation. When working with the EVM, please be aware that the EVM may become very warm.

4.3.2 EVMs are intended solely for use by technically qualified, professional electronics experts who are familiar with the dangers and application risks associated with handling electrical mechanical components, systems, and subsystems. User assumes all responsibility and liability for proper and safe handling and use of the EVM by User or its employees, affiliates, contractors or designees. User assumes all responsibility and liability to ensure that any interfaces (electronic and/or mechanical) between the EVM and any human body are designed with suitable isolation and means to safely limit accessible leakage currents to minimize the risk of electrical shock hazard. User assumes all responsibility and liability for any improper or unsafe handling or use of the EVM by User or its employees, affiliates, contractors or designees.

4.4 User assumes all responsibility and liability to determine whether the EVM is subject to any applicable international, federal, state, or local laws and regulations related to User's handling and use of the EVM and, if applicable, User assumes all responsibility and liability for compliance in all respects with such laws and regulations. User assumes all responsibility and liability for proper disposal and recycling of the EVM consistent with all applicable international, federal, state, and local requirements.

5. *Accuracy of Information:* To the extent TI provides information on the availability and function of EVMs, TI attempts to be as accurate as possible. However, TI does not warrant the accuracy of EVM descriptions, EVM availability or other information on its websites as accurate, complete, reliable, current, or error-free.

6. *Disclaimers:*

   6.1 EXCEPT AS SET FORTH ABOVE, EVMS AND ANY WRITTEN DESIGN MATERIALS PROVIDED WITH THE EVM (AND THE DESIGN OF THE EVM ITSELF) ARE PROVIDED "AS IS" AND "WITH ALL FAULTS." TI DISCLAIMS ALL OTHER WARRANTIES, EXPRESS OR IMPLIED, REGARDING SUCH ITEMS, INCLUDING BUT NOT LIMITED TO ANY IMPLIED WARRANTIES OF MERCHANTABILITY OR FITNESS FOR A PARTICULAR PURPOSE OR NON-INFRINGEMENT OF ANY THIRD PARTY PATENTS, COPYRIGHTS, TRADE SECRETS OR OTHER INTELLECTUAL PROPERTY RIGHTS.

   6.2 EXCEPT FOR THE LIMITED RIGHT TO USE THE EVM SET FORTH HEREIN, NOTHING IN THESE TERMS AND CONDITIONS SHALL BE CONSTRUED AS GRANTING OR CONFERRING ANY RIGHTS BY LICENSE, PATENT, OR ANY OTHER INDUSTRIAL OR INTELLECTUAL PROPERTY RIGHT OF TI, ITS SUPPLIERS/LICENSORS OR ANY OTHER THIRD PARTY, TO USE THE EVM IN ANY FINISHED END-USER OR READY-TO-USE FINAL PRODUCT, OR FOR ANY INVENTION, DISCOVERY OR IMPROVEMENT MADE, CONCEIVED OR ACQUIRED PRIOR TO OR AFTER DELIVERY OF THE EVM.

7. *USER'S INDEMNITY OBLIGATIONS AND REPRESENTATIONS.* USER WILL DEFEND, INDEMNIFY AND HOLD TI, ITS LICENSORS AND THEIR REPRESENTATIVES HARMLESS FROM AND AGAINST ANY AND ALL CLAIMS, DAMAGES, LOSSES, EXPENSES, COSTS AND LIABILITIES (COLLECTIVELY, "CLAIMS") ARISING OUT OF OR IN CONNECTION WITH ANY HANDLING OR USE OF THE EVM THAT IS NOT IN ACCORDANCE WITH THESE TERMS AND CONDITIONS. THIS OBLIGATION SHALL APPLY WHETHER CLAIMS ARISE UNDER STATUTE, REGULATION, OR THE LAW OF TORT, CONTRACT OR ANY OTHER LEGAL THEORY, AND EVEN IF THE EVM FAILS TO PERFORM AS DESCRIBED OR EXPECTED.

8. *Limitations on Damages and Liability:*

   8.1 *General Limitations*. IN NO EVENT SHALL TI BE LIABLE FOR ANY SPECIAL, COLLATERAL, INDIRECT, PUNITIVE, INCIDENTAL, CONSEQUENTIAL, OR EXEMPLARY DAMAGES IN CONNECTION WITH OR ARISING OUT OF THESE TERMS ANDCONDITIONS OR THE USE OF THE EVMS PROVIDED HEREUNDER, REGARDLESS OF WHETHER TI HAS BEEN ADVISED OF THE POSSIBILITY OF SUCH DAMAGES. EXCLUDED DAMAGES INCLUDE, BUT ARE NOT LIMITED TO, COST OF REMOVAL OR REINSTALLATION, ANCILLARY COSTS TO THE PROCUREMENT OF SUBSTITUTE GOODS OR SERVICES, RETESTING, OUTSIDE COMPUTER TIME, LABOR COSTS, LOSS OF GOODWILL, LOSS OF PROFITS, LOSS OF SAVINGS, LOSS OF USE, LOSS OF DATA, OR BUSINESS INTERRUPTION. NO CLAIM, SUIT OR ACTION SHALL BE BROUGHT AGAINST TI MORE THAN ONE YEAR AFTER THE RELATED CAUSE OF ACTION HAS OCCURRED.

   8.2 *Specific Limitations.* IN NO EVENT SHALL TI'S AGGREGATE LIABILITY FROM ANY WARRANTY OR OTHER OBLIGATION ARISING OUT OF OR IN CONNECTION WITH THESE TERMS AND CONDITIONS, OR ANY USE OF ANY TI EVM PROVIDED HEREUNDER, EXCEED THE TOTAL AMOUNT PAID TO TI FOR THE PARTICULAR UNITS SOLD UNDER THESE TERMS AND CONDITIONS WITH RESPECT TO WHICH LOSSES OR DAMAGES ARE CLAIMED. THE EXISTENCE OF MORE THAN ONE CLAIM AGAINST THE PARTICULAR UNITS SOLD TO USER UNDER THESE TERMS AND CONDITIONS SHALL NOT ENLARGE OR EXTEND THIS LIMIT.

9. *Return Policy.* Except as otherwise provided, TI does not offer any refunds, returns, or exchanges. Furthermore, no return of EVM(s) will be accepted if the package has been opened and no return of the EVM(s) will be accepted if they are damaged or otherwise not in a resalable condition. If User feels it has been incorrectly charged for the EVM(s) it ordered or that delivery violates the applicable order, User should contact TI. All refunds will be made in full within thirty (30) working days from the return of the components(s), excluding any postage or packaging costs.

10. *Governing Law:* These terms and conditions shall be governed by and interpreted in accordance with the laws of the State of Texas, without reference to conflict-of-laws principles. User agrees that non-exclusive jurisdiction for any dispute arising out of or relating to these terms and conditions lies within courts located in the State of Texas and consents to venue in Dallas County, Texas. Notwithstanding the foregoing, any judgment may be enforced in any United States or foreign court, and TI may seek injunctive relief in any United States or foreign court.

Mailing Address: Texas Instruments, Post Office Box 655303, Dallas, Texas 75265
Copyright © 2015, Texas Instruments Incorporated

IMPORTANT NOTICE

Texas Instruments Incorporated and its subsidiaries (TI) reserve the right to make corrections, enhancements, improvements and other changes to its semiconductor products and services per JESD46, latest issue, and to discontinue any product or service per JESD48, latest issue. Buyers should obtain the latest relevant information before placing orders and should verify that such information is current and complete. All semiconductor products (also referred to herein as “components”) are sold subject to TI’s terms and conditions of sale supplied at the time of order acknowledgment.

TI warrants performance of its components to the specifications applicable at the time of sale, in accordance with the warranty in TI’s terms and conditions of sale of semiconductor products. Testing and other quality control techniques are used to the extent TI deems necessary to support this warranty. Except where mandated by applicable law, testing of all parameters of each component is not necessarily performed.

TI assumes no liability for applications assistance or the design of Buyers’ products. Buyers are responsible for their products and applications using TI components. To minimize the risks associated with Buyers’ products and applications, Buyers should provide adequate design and operating safeguards.

TI does not warrant or represent that any license, either express or implied, is granted under any patent right, copyright, mask work right, or other intellectual property right relating to any combination, machine, or process in which TI components or services are used. Information published by TI regarding third-party products or services does not constitute a license to use such products or services or a warranty or endorsement thereof. Use of such information may require a license from a third party under the patents or other intellectual property of the third party, or a license from TI under the patents or other intellectual property of TI.

Reproduction of significant portions of TI information in TI data books or data sheets is permissible only if reproduction is without alteration and is accompanied by all associated warranties, conditions, limitations, and notices. TI is not responsible or liable for such altered documentation. Information of third parties may be subject to additional restrictions.

Resale of TI components or services with statements different from or beyond the parameters stated by TI for that component or service voids all express and any implied warranties for the associated TI component or service and is an unfair and deceptive business practice. TI is not responsible or liable for any such statements.

Buyer acknowledges and agrees that it is solely responsible for compliance with all legal, regulatory and safety-related requirements concerning its products, and any use of TI components in its applications, notwithstanding any applications-related information or support that may be provided by TI. Buyer represents and agrees that it has all the necessary expertise to create and implement safeguards which anticipate dangerous consequences of failures, monitor failures and their consequences, lessen the likelihood of failures that might cause harm and take appropriate remedial actions. Buyer will fully indemnify TI and its representatives against any damages arising out of the use of any TI components in safety-critical applications.

In some cases, TI components may be promoted specifically to facilitate safety-related applications. With such components, TI’s goal is to help enable customers to design and create their own end-product solutions that meet applicable functional safety standards and requirements. Nonetheless, such components are subject to these terms.

No TI components are authorized for use in FDA Class III (or similar life-critical medical equipment) unless authorized officers of the parties have executed a special agreement specifically governing such use.

Only those TI components which TI has specifically designated as military grade or “enhanced plastic” are designed and intended for use in military/aerospace applications or environments. Buyer acknowledges and agrees that any military or aerospace use of TI components which have ***not*** been so designated is solely at the Buyer's risk, and that Buyer is solely responsible for compliance with all legal and regulatory requirements in connection with such use.

TI has specifically designated certain components as meeting ISO/TS16949 requirements, mainly for automotive use. In any case of use of non-designated products, TI will not be responsible for any failure to meet ISO/TS16949.

Products		**Applications**	
Audio	www.ti.com/audio	Automotive and Transportation	www.ti.com/automotive
Amplifiers	amplifier.ti.com	Communications and Telecom	www.ti.com/communications
Data Converters	dataconverter.ti.com	Computers and Peripherals	www.ti.com/computers
DLP® Products	www.dlp.com	Consumer Electronics	www.ti.com/consumer-apps
DSP	dsp.ti.com	Energy and Lighting	www.ti.com/energy
Clocks and Timers	www.ti.com/clocks	Industrial	www.ti.com/industrial
Interface	interface.ti.com	Medical	www.ti.com/medical
Logic	logic.ti.com	Security	www.ti.com/security
Power Mgmt	power.ti.com	Space, Avionics and Defense	www.ti.com/space-avionics-defense
Microcontrollers	microcontroller.ti.com	Video and Imaging	www.ti.com/video
RFID	www.ti-rfid.com		
OMAP Applications Processors	www.ti.com/omap	**TI E2E Community**	e2e.ti.com
Wireless Connectivity	www.ti.com/wirelessconnectivity		

Mailing Address: Texas Instruments, Post Office Box 655303, Dallas, Texas 75265
Copyright © 2015, Texas Instruments Incorporated