National Semiconductor

AF151 Dual Universal Active Filter

General Description

The AF151 consists of 2 general purpose state variable active filters in a single package. By using only 4 external resistors for each section, various second order functions may be formed. Low pass, high pass and band pass functions are available simultaneously at separate outputs. In addition, there are 2 uncommitted operational amplifiers which are available for buffering or for forming all pass and notch functions. Any of the classical filter configurations, such as Butterworth, Bessel, Cauer and Chebyshev can be easily formed.

Features

- Independent Q, frequency and gain adjustment
- Very low sensitivity to external component variation
- Separate low pass, high pass and band pass outputs
- Operation to 10 kHz
- Q range to 500
- Wide power supply range—±5V to ±18V
- Accuracy—±1%
- Fourth order functions in one package

Circuit Diagrams

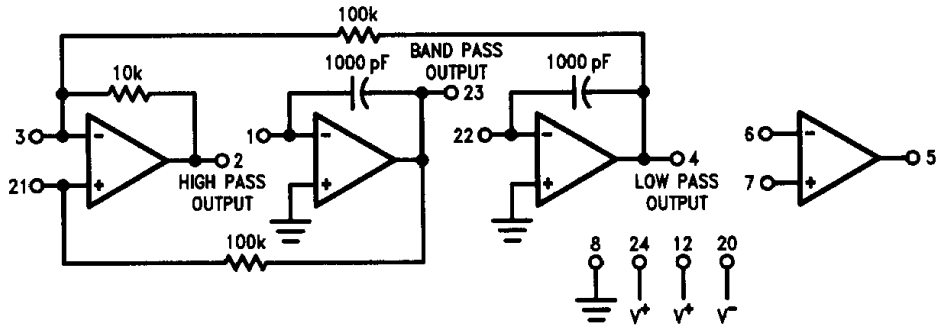

TL/K/10113–1

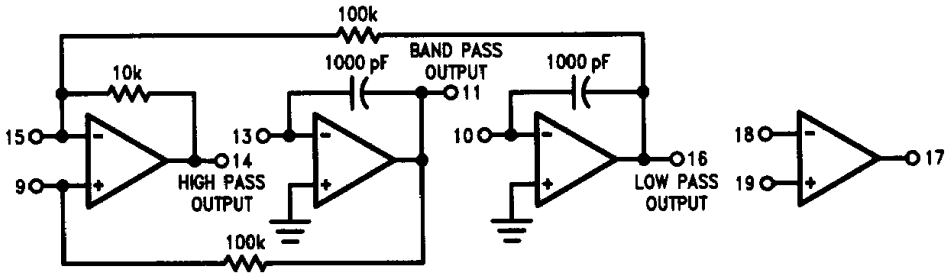

TL/K/10113–2

Order Number AF151-1CJ or AF151-2CJ
See NS Package Number HY24A

Absolute Maximum Ratings

If Military/Aerospace specified devices are required, please contact the National Semiconductor Sales Office/Distributors for availability and specifications.

Supply Voltage	±18V
Power Dissipation	900 mW/Package
Differential Input Voltage	±36V
Output Short-Circuit Duration (Note 1)	Infinite
Operating Temperature	−25°C to +85°C
Storage Temperature	−25°C to +100°C
Lead Temperature (Soldering, 10 sec.)	300°C

Electrical Characteristics (Complete Active Filter)

Specifications apply for V_S = ±15V and over −25°C to +85°C unless otherwise specified.
(Specifications apply for each section.)

Parameter	Conditions	Min	Typ	Max	Units
Frequency Range	$f_c \times Q \leq 50{,}000$			10k	Hz
Q Range	$f_c \times Q \leq 50{,}000$			500	Hz/Hz
f_o Accuracy					
AF151-1C	$f_c \times Q \leq 10{,}000$, T_A = 25°C			±2.5	%
AF151-2C	$f_c \times Q \leq 10{,}000$, T_A = 25°C			±1.0	%
f_o Temperature Coefficient			±50	±150	ppm/°C
Q Accuracy	$f_c \times Q \leq 10{,}000$, T_A = 25°C			±7.5	%
Q Temperature Coefficient			±300	±750	ppm/°C
Power Supply Current	V_S = ±15V		2.5	4.5	mA

Electrical Characteristics (Internal Op Amp) (Note 2)

Parameter	Conditions	Min	Typ	Max	Units
Input Offset Voltage	$R_S \leq 10\ k\Omega$		1.0	6.0	mV
Input Offset Current			4	50	nA
Input Bias Current			30	200	nA
Input Resistance			2.5		MΩ
Large Signal Voltage Gain	$R_L \geq 2k$, V_{OUT} = ±10V	25	160		V/mV
Output Voltage Swing	R_L = 10 kΩ	±12	±14		V
	R_L = 2 kΩ	±10	±13		V
Input Voltage Range		±12			V
Common-Mode Rejection Ratio	$R_S \leq 10\ k\Omega$	70	90		dB
Supply Voltage Rejection Ratio	$R_S \leq 10\ k\Omega$	77	96		dB
Output Short-Circuit Current			25		mA
Slew Rate (Unity Gain)			0.6		V/μs
Small Signal Bandwidth			1		MHz
Phase Margin			60		Degrees

Note 1: Any of the amplifiers can be shorted to ground indefinitely; however, more than one should not be simultaneously shorted as the maximum junction temperature will be exceeded.

Note 2: Specifications apply for V_S = ±15V, T_A = 25°C.

Applications Information

The AF151 consists of 2 identical filter sections and 2 uncommitted op amps. The op amps may be used for buffering inputs and outputs, summing amplifiers (for notch filter generation), adjusting gain through the filter sections, additional passive networks to create higher order filters, or simply used elsewhere in the user's system.

The design equations given apply to both sections; however, for clarity, only the pin designations for Section 1 will be shown in the examples and discussion.

See the AF100 datasheet for additional information on this type of filter.

The design equations assume that the user has knowledge of the frequency and Q values for the particular design to be synthesized. If this is not the case, various references and texts are available to help the user in determining these parameters. A bibliography of recommended texts can also be found in the AF100 datasheet.

CIRCUIT DESCRIPTION AND OPERATION

A schematic of one section of the AF151 is shown in *Figure 1*. Amplifier A1 is a summing amplifier with inputs from integrator A2 to the non-inverting input and integrator A3 to the inverting input. Amplifier A4 is an uncommitted amplifier.

By adding external resistors the circuit can be used to generate the second order system.

$$T(s) = \frac{a_3s^2 + a_2s + a_1}{s^2 + b_2s + b_1}$$

The denominator coefficients determine the complex pole pair location and the quality of the poles where

$\omega_o = \sqrt{b_1}$ = the radian center frequency

$Q = \frac{\omega_o}{b_2}$ = the quality of the complex pole pair

If the output is taken from the output of A1, numerator coefficients a_1 and a_2 equal zero, and the transfer function becomes:

$$T(s) = \frac{a_3s^2}{s^2 + \frac{\omega_o}{Q} + \omega_o^2} \quad \text{(High Pass)}$$

If the output is taken from the output of A2, numerator coefficients a_1 and a_3 equal zero and the transfer function becomes:

$$T(s) = \frac{a_2s}{s^2 + \frac{\omega_o}{Q}s + \omega_o^2} \quad \text{(Band Pass)}$$

If the output is taken from the output of A3, numerator coefficients a_3 and a_2 equal zero and the transfer function becomes:

$$T(s) = \frac{a_1}{s^2 + \frac{\omega_o}{Q}s + \omega_o^2} \quad \text{(Low Pass)}$$

Using proper input and output connections the circuit can also be used to generate the transfer functions for a notch and all pass filter.

In the transfer function for a notch function a_2 becomes zero, a_1 equals ω_z^2 and a_3 equals 1. The transfer function becomes:

$$T(s) = \frac{s^2 + \omega_z^2}{s^2 + \frac{\omega_o}{Q}s + \omega_o^2} \quad \text{(Notch)}$$

In the all pass transfer function $a_1 = \omega_o^2$, $a_2 = -\omega_o/Q$ and $a_3 = 1$. The transfer function becomes:

$$T(s) = \frac{s^2 - \frac{\omega_o}{Q}s + \omega_o^2}{s^2 + \frac{\omega_o}{Q}s + \omega_o^2} \quad \text{(All Pass)}$$

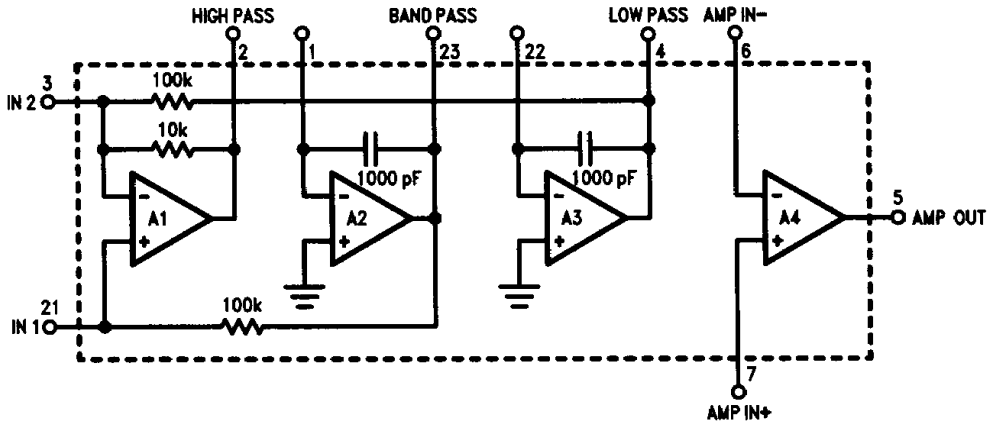

TL/K/10113–3

FIGURE 1. AF151 Schematic (Section 1)

Applications Information (Continued)

FREQUENCY CALCULATIONS

For operation above 200 Hz, the frequency of each section of the AF151 is set by 2 equal valued resistors. These resistors couple the output of the first op amp (pin 2) to the input of the second op amp (pin 1) and the output of the second op amp (pin 23) to the input of the third op amp (pin 22).

The value for R_f is given by:

$$R_f = \frac{50.33 \times 10^6}{f_o}\Omega \quad (1)$$

For operation below 200 Hz, "T" tuning should be used as shown in *Figure 3*.

For this configuration,

$$R_S = \frac{R_T{}^2}{R_f - 2R_T} \quad (2)$$

where R_T or R_S can be chosen arbitrarily, once R_f is found from Equation 1.

Q CALCULATIONS

To set the Q of each section of the AF151, one resistor is required. The value of the Q setting resistor depends on the input connection (inverting or non-inverting) and the input resistance. Because the input resistance does affect the Q, it is often desirable to use one of the uncommitted op amps to provide a buffer between the signal source impedance and the input resistor used to set the Q.

To determine which connection is required for a particular Q, arbitrarily select a value of R_{IN} *(Figure 4)* and calculate Q_{MIN} according to Equation 3.

$$Q_{MIN} = \frac{1 + \frac{10^5}{R_{IN}}}{3.48} \quad (3)$$

If the Q required for the circuit is greater than Q_{MIN}, use Equation 4 to calculate the value of R_Q and the connection shown in *Figure 4*.

$$R_Q = \frac{10^5}{3.48Q - 1 - \frac{10^5}{R_{IN}}} \quad (4)$$

If the Q required for the circuit is less than Q_{MIN}, use Equation 5 to calculate the value of R_Q and the connection shown in *Figure 5*.

$$R_Q = \frac{10^4}{\frac{0.3162}{Q}\left(1 + \frac{10^5}{R_{IN}}\right) - 1.1} \quad (5)$$

Both connections shown in *Figures 4* and *5* are "non-inverting" relative to the phase relationship between the input signal and the low pass output.

For any Q, Equation 6 may be used with the "inverting" connection shown in *Figure 6*.

$$R_Q = \frac{10^5}{3.16Q\left(1.1 + \frac{10^4}{R_{IN}}\right) - 1} \quad (6)$$

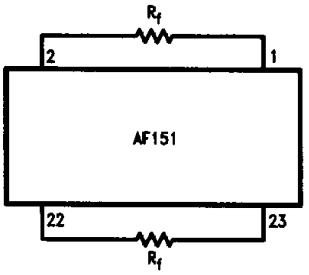

TL/K/10113-4

FIGURE 2. Frequency Tuning

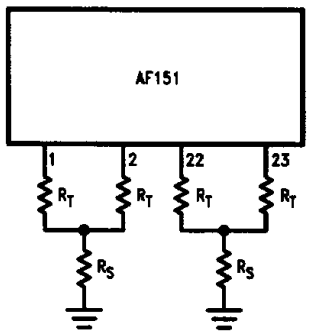

TL/K/10113-5

FIGURE 3. "T" Tuning for Low Frequency

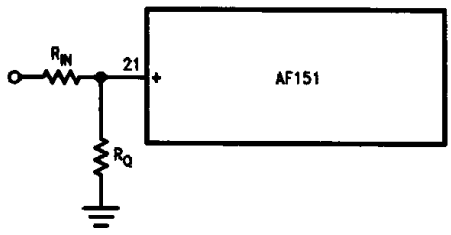

TL/K/10113-6

FIGURE 4. Connection for Q > Q_{MIN}

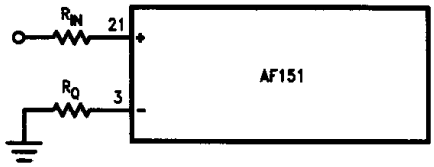

TL/K/10113-7

FIGURE 5. Connection for Q < Q_{MIN}



TL/K/10113-8

FIGURE 6. Connection for Any Q, Inverting

Applications Information (Continued)

NOTCH TUNING

When the low pass output and the high pass output are summed together, the result is a notch *(Figure 7)*.

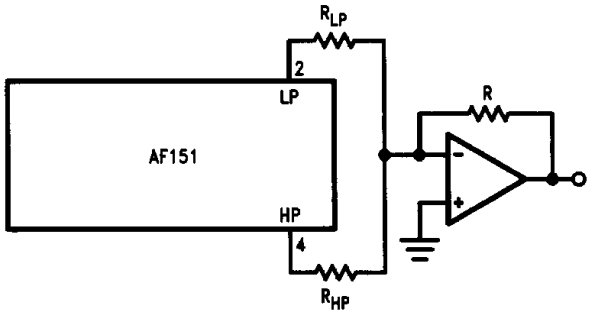

TL/K/10113–9

FIGURE 7. Notch Filter

The relationship between R_{LP}, R_{HP}, f_o and f_z, the location of the notch, is given by Equation 7.

$$R_{HP}\left(\frac{f_z}{f_o}\right)^2\frac{R_{LP}}{10} \tag{7}$$

Again, it is advantageous to use one of the uncommitted op amps to perform this summing function to prevent loading of this stage or the resistors R_{LP} and R_{HP} from effecting the Q of subsequent stages. Resistor R can be used to set the gain of the filter section.

GAIN CALCULATIONS

The following list of equations will be helpful in calculating the relationship between the external components and various important parameters. The following definitions are used:

A_L — Gain from input to low pass output at DC

A_H — Gain from input to high pass output at high frequency

A_B — Gain from input to band pass output at center frequency

For *Figure 4:*

$$A_L = \frac{11}{\Delta}$$

$$A_H = \frac{1.1}{\Delta}$$

$$A_B = \frac{-\left(1+\frac{10^5}{R_Q}+\frac{10^5}{R_{IN}}\right)}{\Delta}$$

$$\Delta = 1+\frac{R_{IN}}{10^5}+\frac{R_{IN}}{R_Q}$$

For *Figure 5:*

$$A_L = \frac{11+\frac{10^5}{R_Q}}{\Delta}$$

$$A_H = \frac{1.1+\frac{10^4}{R_Q}}{\Delta}$$

$$AB = \frac{-\left(1+\frac{10^5}{R_{IN}}\right)}{\Delta}$$

$$\Delta = 1+\frac{R_{IN}}{10^5}$$

For *Figure 6:*

$$A_L = -\frac{10^5}{R_{IN}}$$

$$A_H = -\frac{10^4}{R_{IN}}$$

$$A_B = \frac{\frac{10^5}{R_{IN}}\left(1+\frac{10^5}{R_Q}\right)}{11+\frac{10^5}{R_{IN}}}$$

For *Figure 7:*

At low frequency, when $f_o < f_z$, the gain to the output of the summing op amp is:

$$A_L = \frac{11\left(\frac{R}{R_{LP}}\right)}{\left(1+\frac{R_{IN}}{10^5}+\frac{R_{IN}}{R_Q}\right)}$$

At high frequency, when $f_o > f_z$, the gain to the output of the summing op amp is:

$$A_H = \frac{1.1\left(\frac{R}{R_{HP}}\right)}{\left(1+\frac{R_{IN}}{10^5}+\frac{R_{IN}}{R_Q}\right)}$$

At the notch, ideally the gain is zero (0).

TUNING TIPS

In applications where 2% to 3% accuracy is not sufficient to provide the required filter response, the AF151 stages can be tuned by adding trim pots or trim resistors in series or parallel with one of the frequency determining resistors and the Q determining resistor.

When tuning a filter section, no matter what output configuration is to be used in the circuit, measurements are made between the input and the band pass output.

Before any tuning is attempted, the low pass output should be checked to see that the output is not clipping. At the center frequency of the section, the low pass output is 10 dB higher than the band pass output and 20 dB higher than the high pass. This should be kept in mind because if clipping occurs, the results obtained when tuning will be incorrect.

Frequency Tuning

By adjusting resistor R_f, center frequency of a section can be adjusted. Adjusting center frequency by phase is the most accurate but tuning for maximum gain is also correct.

Q Tuning

The Q is tuned by adjusting the R_Q resistor. To tune the Q correctly, the signal source must have an output impedance very much lower than the input resistance of the filter since the input resistance affects the Q. The input must be driven through the same resistance the circuit will "see" to obtain precise adjustment.

Applications Information (Continued)

The lower 3 dB (45°) frequency, f_L, and the upper 3 dB (45°) frequency, f_H, can be calculated by the following equations:

$$f_H = \left(\frac{1}{20} + \sqrt{\left(\frac{1}{2Q}\right)^2 + 1}\right) \times (f_o)$$

where f_o = center frequency

$$f_L = \left(\sqrt{\left(\frac{1}{2Q}\right)^2 + 1} - \frac{1}{2Q}\right) \times (f_o)$$

When adjusting the Q, set the signal source to either f_H or f_L and adjust for 45°C phase change or a 3 dB gain change.

Notch Tuning

If a circuit has a jw axis zero pair, the notch can be tuned by adjusting the ratio of the summing resistors (low pass/high pass summing).

In either case, the signal is connected to the input and the proper resistor is adjusted for a null at the output.

TUNING PROCEDURE

Center Frequency Tuning

Set oscillator to center frequency desired for the filter section, adjust amplitude and check that clipping does not occur at the low pass output.

Adjust the R_f resistor until the phase shift between input and band pass output is 180° or 0°, depending upon the connection.

Q Tuning

Set oscillator to upper or lower 45° frequency (see tuning tips) and tune the Q resistor until the phase shift is 135° (upper 45° frequency) or 225° (lower 45° frequency).

Zero Tuning (Notch Tuning)

Set the oscillator output to the zero frequency and tune one of the summing resistors for a null at the output of the summing amplifier.

Gain Adjust

Set the oscillator to any desired frequency and the gain can be adjusted by measuring the output of the summing amplifier and adjusting the feedback resistance.

DESIGN EXAMPLE

Assume 2 band pass filters are required to separate FSK data.

f1 = 800 Hz, Q = 40

f2 = 1000 Hz, Q = 50

The gain through each filter is to be 10 V/V (20 dB).

Since the design is similar for both sections, only the first section design will be shown for the example.

(a) From Equation 1

$$R_f = \frac{50.33 \times 10^6}{f_o} = \frac{50.33 \times 10^6}{800}$$

$$\boxed{R_f = 62.9k}$$

(b) Checking Q_{MIN} from Equation 3, arbitrarily let R_{IN} = 300k.

$$Q_{MIN} = \frac{1 + \frac{10^5}{R_{IN}}}{3.48} = \frac{1 + \frac{10^5}{3 \times 10^5}}{3.48} = 0.383$$

Since the Q required for the design (Q = 40), is greater than Q_{MIN}, the circuit of *Figure 4* or *Figure 6* may be used. Arbitrarily we shall select the circuit of *Figure 4*.

(c) From Equation 4, R_Q is found to be

$$R_Q = \frac{10^5}{3.48Q - 1 - \frac{10^5}{R_{IN}}} = \frac{10^5}{(3.48)(40) - 1 - \frac{10^5}{3 \times 10^5}}$$

or $\boxed{R_Q = 725\Omega}$

(d) Calculate the center frequency gain for *Figure 4*.

$$A_B = \frac{-\left(1 + \frac{10^5}{R_Q} + \frac{10^5}{R_{IN}}\right)}{\left(1 + \frac{R_{IN}}{10^5} + \frac{R_{IN}}{R_Q}\right)} = \frac{-(1 + 137.9 + 0.333)}{(1 + 3.0 + 414)}$$

A_B = 0.333 V/V

Since the gain at f_o is 0.333 V/V, a gain of 10 V/V can be obtained by using the uncommitted operational amplifier with a gain of 30.03 as shown in *Figure 8*.

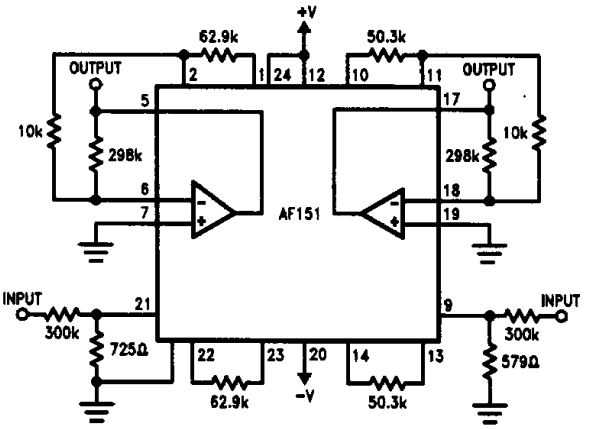

TL/K/10113–10

FIGURE 8. Dual Band Pass Filter

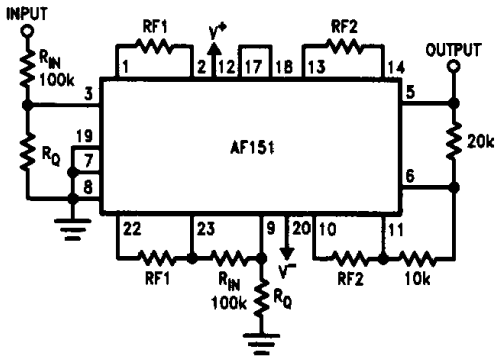

TL/K/10113–11

FIGURE 9. Telephone Multifrequency (MF) Band Pass Filter

Applications Information (Continued)

FREQ	BW	f_c	f1	Q1 & Q2	f2	RF1	RF2	RQ
700	75	698.4	665.6	17	732.8	75.62k	68.68k	1.749k
900	75	898.7	865.8	21.8	932.9	58.13k	53.95k	1.354k
1100	75	1098.8	1065.7	26.7	1132.9	47.23k	44.43k	1.100k
1300	75	1298.9	1265.8	31.6	1332.9	39.76k	37.76k	926.2Ω
1500	75	1499.0	1465.8	36.4	1532.9	34.34k	32.83k	802.1Ω
1700	75	1699.1	1665.9	41.3	1733.0	30.21k	29.04k	705.6Ω

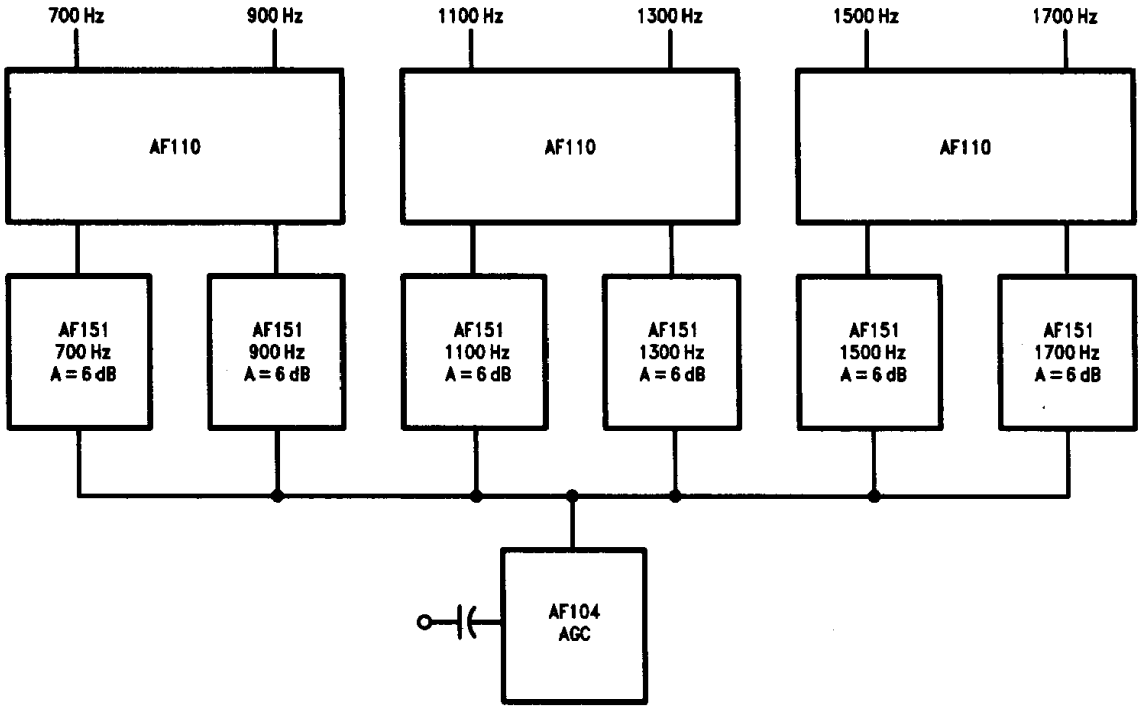

TL/K/10113–12

FIGURE 10. MF Tone Receiver

Applications Information (Continued)

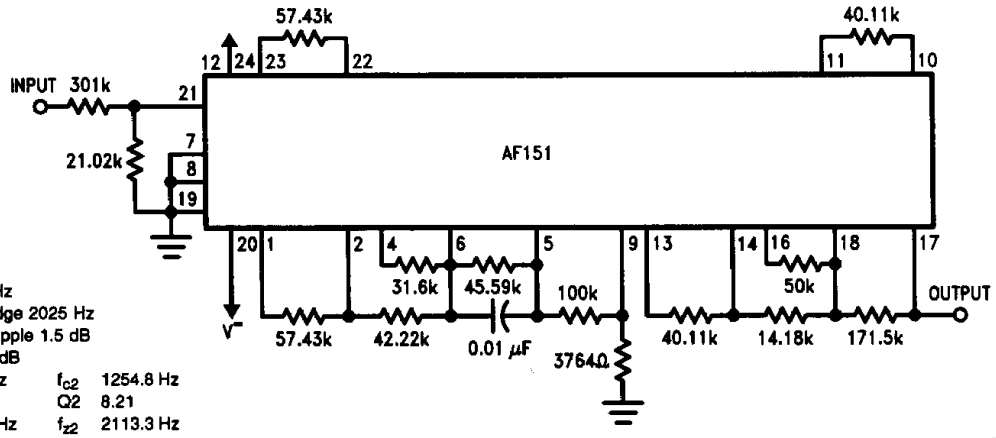

Cutoff 1270 Hz
Stop Band Edge 2025 Hz
Band Pass Ripple 1.5 dB
Rejection 59 dB

f_{c1}	876.3 Hz	f_{c2}	1254.8 Hz
Q1	1.75	Q2	8.21
f_{z1}	3201.7 Hz	f_{z2}	2113.3 Hz
f_R	356.9 Hz		

TL/K/10113–13

FIGURE 11. Low Pass Low Speed Asynchronous FSK Modem Filter

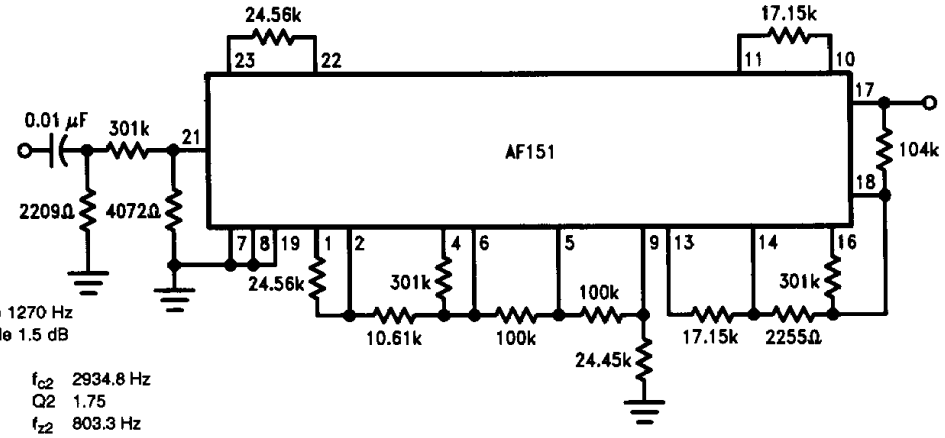

Cutoff 2025 Hz
Stop Band Edge 1270 Hz
Band Pass Ripple 1.5 dB
Rejection 59 dB

f_{c1}	2049.6 Hz	f_{c2}	2934.8 Hz
Q1	8.21	Q2	1.75
f_{z1}	1216.9 Hz	f_{z2}	803.3 Hz
f_R	7206 Hz		

TL/K/10113–14

FIGURE 12. High Pass Low Speed Asynchronous FSK Modem Filter

Applications Information (Continued)

Standard Resistance Values are obtained from the Decade Table by multiplying by multiples of 10. As an example, 1.33 can represent 1.33Ω, 133Ω, 1.33 kΩ, 13.3 kΩ, 133 kΩ, 1.33 MΩ.

Standard 5% and 2% Resistance Values

Ω	Ω	Ω	Ω	Ω	Ω	Ω	Ω	Ω	Ω	Ω	MΩ	
10	27	68	180	470	1,200	3,300	8,200	22,000	56,000	150,000	0.24	0.62
11	30	75	200	510	1,300	3,600	9,100	24,000	62,000	160,000	0.27	0.68
12	33	82	220	560	1,500	3,900	10,000	27,000	68,000	180,000	0.30	0.75
13	36	91	240	620	1,600	4,300	11,000	30,000	75,000	200,000	0.33	0.82
15	39	100	270	680	1,800	4,700	12,000	33,000	82,000	220,000	0.36	0.91
16	43	110	300	750	2,000	5,100	13,000	36,000	91,000		0.39	1.0
18	47	120	330	820	2,200	5,600	15,000	39,000	100,000		0.43	1.1
20	51	130	360	910	2,400	6,200	16,000	43,000	110,000		0.47	1.2
22	56	150	390	1,000	2,700	6,800	18,000	47,000	120,000		0.51	1.3
24	62	160	430	1,100	3,000	7,500	20,000	51,000	130,000		0.56	1.5

Decade Table Determining ½% and 1% Standard Resistance Values

Ω	Ω	Ω	Ω	Ω	Ω	Ω	Ω	Ω	Ω	Ω	MΩ
1.00	1.21	1.47	1.78	2.15	2.61	3.16	3.83	4.64	5.62	6.81	8.25
1.02	1.24	1.50	1.82	2.21	2.67	3.24	3.92	4.75	5.76	6.98	8.45
1.05	1.27	1.54	1.87	2.26	2.74	3.32	4.02	4.87	5.90	7.15	8.66
1.07	1.30	1.58	1.91	2.32	2.80	3.40	4.12	4.99	6.04	7.32	8.87
1.10	1.33	1.62	1.96	2.37	2.87	3.48	4.22	5.11	6.19	7.50	9.09
1.13	1.37	1.65	2.00	2.43	2.94	3.57	4.32	5.23	6.34	7.68	9.31
1.15	1.40	1.69	2.05	2.49	3.01	3.65	4.42	5.36	6.49	7.87	9.53
1.18	1.43	1.74	2.10	2.55	3.09	3.74	4.53	5.49	6.65	8.06	9.76