RoHS

EFD25 Transformer

AEFD25-4223

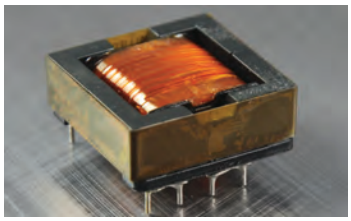

- **EFD25 Low Profile Power Transformer Design**
- **RoHS Compliant**

Specifications @25℃				
S - F	Inductance F = 125KHz, 1Vrms, 25ºC	Leakage Inductance F=125KHz, 1 Vrms (short pin)	DCR 25ºC (Max)	Turns Ratio
2 - 1	1.17mH ±20%	-	550 mOhm	67Ts
5 - 4	-	-	540 mOhm	6Ts

Specifications @25℃				
S - F	Inductance F = 125KHz, 1Vrms,	DC-BIAS F=125KHz, 1 Vrms	DCR 25ºC (Max)	Turns Ratio
8,9 - 6,7	-	-	25 mOhm	5Ts
1,2,4,5 - 6,7,8,9	-	45(REF)	-	-

Specifications @25℃					
Location / Desc.	PRI-PRI	PRI-SEC	SEC-SEC	PRI-CORE	COIL-CORE
Hi-Pot (50Hz/60Hz)	-	3000Vac, 10mA,60 sec	-	1000Vac, 10mA,60 sec	1000Vac, 10mA,60 sec
Insulation Resistance	-	500Vdc, 100mΩ min	-	500Vac, 100 mΩ min	500Vac, 100 mΩ min

All specifications subject to change without notice.

MECHANICAL

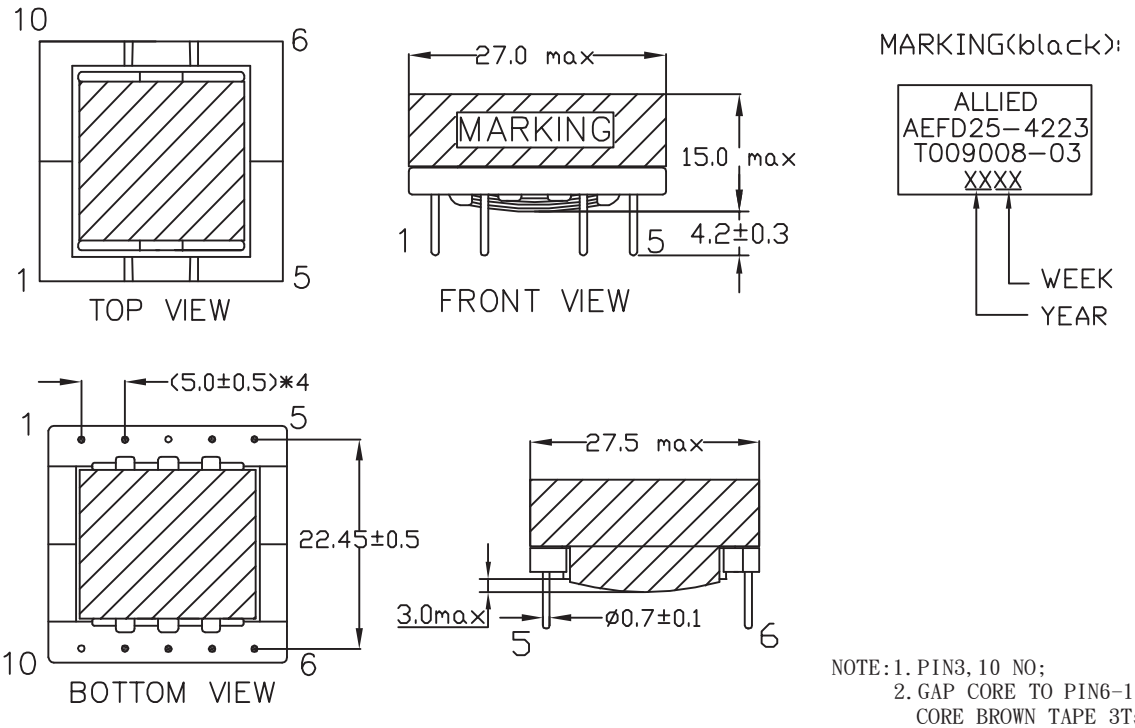

NOTE: 1. PIN3, 10 NO;
2. GAP CORE TO PIN6-10 SIDE, CORE BROWN TAPE 3Ts.