RoHS

Transformer

AEE13-4221

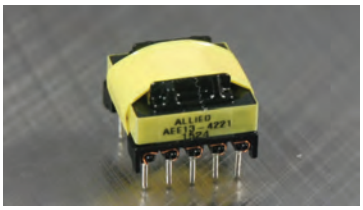

- EE13 Horizontal Core Configuration
- 10 Pin Through Hole Mounting
- Operating Temperature: -40ºC ~ 85ºC
- UL Class B 130ºC Insulation, File E349541

Primary Electrical Specifications @ 25°C

S - F	INDUCTANCE F=10KHZ, 1VRMS, 25ºC	LEAKAGE INDUCTANCE F= KHZ, VRMS, 25ºC	DCR 25ºC (Max)	TURN RATIO
9 - 10	270 uH ± 10%	3.0uH max	610 mOhm	48Ts
7 - 8	47.0uH ±15%	–	190 mOhm	20Ts

Secondary Electrical Specifications @ 25°C

S – F	INDUCTANCE F= KHZ, VRMS	LEAKAGE INDUCTANCE F= HZ, VRMS, 25ºC	DCR 25ºC (Max)	TURN RATIO
2 - 1	57.6uH ±15%	–	550 mOhm	22Ts
4 - 3	57.6uH ±15%	–	550 mOhm	22Ts
6 - 5	57.6uH ±15%	–	550 mOhm	22Ts

Hi - Pot / Insulation Resistance

LOCAT. \ DESC.	PRI–PRI	PRI–SEC	SEC-CORE	PRI-CORE	COIL-CORE
HI–POT (50Hz/60Hz)	–	1000VAC 5mA, 2SEC	500VAC 5mA, 2SEC	500VAC 5mA, 2SEC	–
INSULATION RESISTANCE	–	500VDC 100 MOhm min	500VDC 100 MOhm min	500VDC 100 MOhm min	–

All specifications subject to change without notice.

MECHANICAL

UNIT:mm

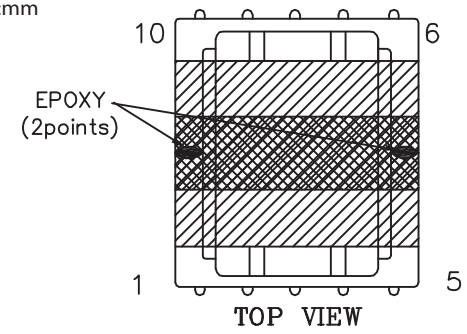

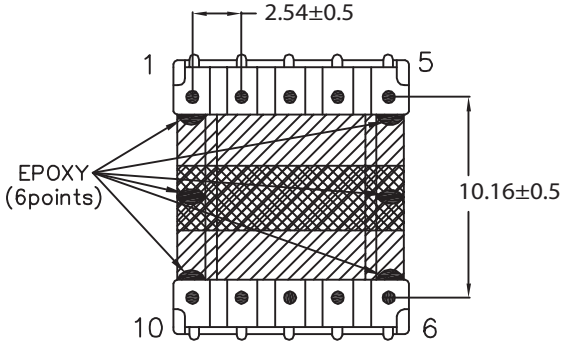

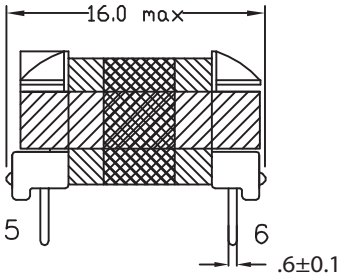

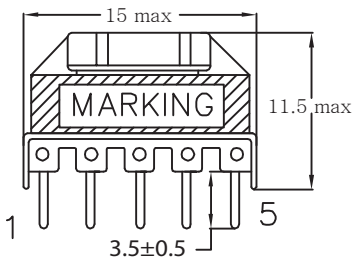

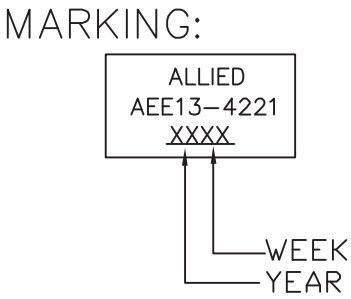

SCHEMATIC

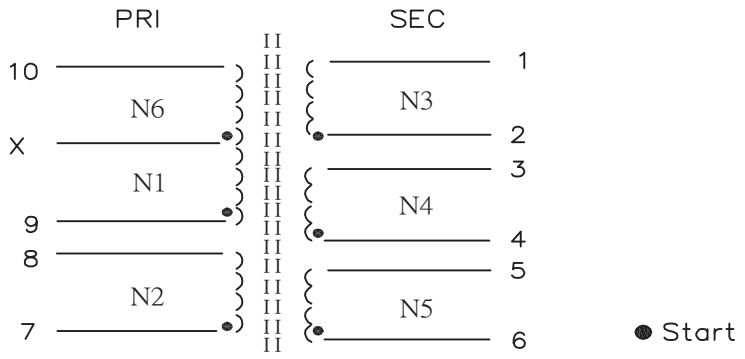

WINDING

WINDING ORDER		S – F	WIRE SIZE	TURN	MARGIN TAPE	INSULATION TAPE	RATED CURRENT	REMARK
#1	N1	9 – X	0.23ø(2UEW)	24TS	–	1 LAYER	0.185A	1 WIRE
#2	N2	7 – 8	0.26ø(2UEW)	20TS	–	1 LAYER	0.237A	1 WIRE
#3	N3	2 – 1	0.17ø(2UEW)	22TS	–	1 LAYER	0.101A	1 WIRE
#4	N4	4 – 3	0.17ø(2UEW)	22TS	–		0.101A	1 WIRE
#5	N5	6 – 5	0.17ø(2UEW)	22TS	–		0.101A	1 WIRE
#6	N6	X – 10	0.23ø(2UEW)	24TS	–	2 LAYERS	0.185A	1 WIRE

CONSTRUCTION

