Monolithic Accelerometer With Signal Conditioning

ADXL50*

FEATURES

Complete Acceleration Measurement System on a Single Monolithic IC
Full-Scale Measurement Range: ±50 g
Self-Test on Digital Command
+5 V Single Supply Operation
Sensitivity Precalibrated to 19 mV/g
Internal Buffer Amplifier for User Adjustable Sensitivity and Zero-g Level
Frequency Response: DC to 10 kHz
Post Filtering with External Passive Components
High Shock Survival: >2000 g Unpowered
Other Versions Available: ADXL05 (±5 g)

GENERAL DESCRIPTION

The ADXL50 is a complete acceleration measurement system on a single monolithic IC. Three external capacitors and a +5 volt power supply are all that is required to measure accelerations up to ±50 g. Device sensitivity is factory trimmed to 19 mV/g, resulting in a full-scale output swing of ±0.95 volts for a ±50 g applied acceleration. Its zero g output level is +1.8 volts.

A TTL compatible self-test function can electrostatically deflect the sensor beam at any time to verify device functionality.

For convenience, the ADXL50 has an internal buffer amplifier with a full 0.25 V to 4.75 V output range. This may be used to set the zero-g level and change the output sensitivity by using external resistors. External capacitors may be added to the resistor network to provide 1 or 2 poles of filtering. No external active components are required to interface directly to most analog-to-digital converters (ADCs) or microcontrollers.

The ADXL50 uses a capacitive measurement method. The analog output voltage is directly proportional to acceleration, and is fully scaled, referenced and temperature compensated, resulting in high accuracy and linearity over a wide temperature range. Internal circuitry implements a forced-balance control loop that improves accuracy by compensating for any mechanical sensor variations.

The ADXL50 is powered from a standard +5 V supply and is robust for use in harsh industrial and automotive environments and will survive shocks of more than 2000 g unpowered.

The ADXL50 is available in a hermetic 10-pin TO-100 metal can, specified over the 0°C to +70°C commercial, and –40°C to +85°C industrial temperature ranges. Contact factory for availability of devices specified for operation over the –40°C to +105°C automotive temperature range.

FUNCTIONAL BLOCK DIAGRAM

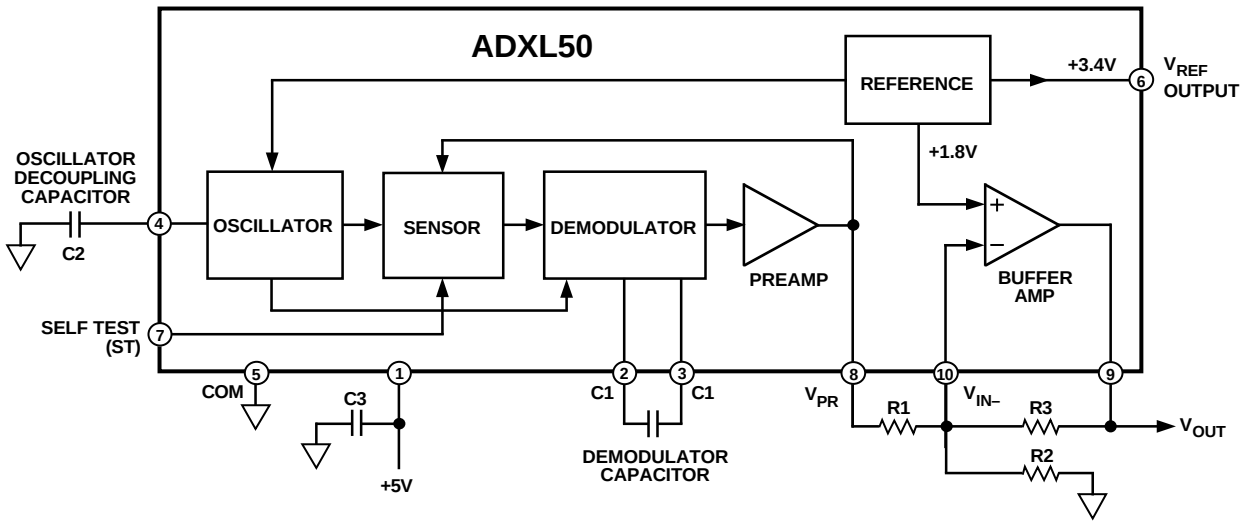

*Patents pending.

REV. B

Information furnished by Analog Devices is believed to be accurate and reliable. However, no responsibility is assumed by Analog Devices for its use, nor for any infringements of patents or other rights of third parties which may result from its use. No license is granted by implication or otherwise under any patent or patent rights of Analog Devices.

© Analog Devices, Inc., 1996

One Technology Way, P.O. Box 9106, Norwood, MA 02062-9106, U.S.A.
Tel: 617/329-4700 **Fax: 617/326-8703**

ADXL50—SPECIFICATIONS ($T_A = T_{MIN}$ to T_{MAX}, T_A = +25°C for J Grade Only, V_S = +5 V, @ Acceleration = 0 *g*, unless otherwise noted)

Parameter	Conditions	ADXL50J/A Min	Typ	Max	Units
SENSOR INPUT					
Measurement Range	Guaranteed Full Scale	–50		+50	*g*
Nonlinearity	Best Fit Straight Line, 50 *g* FS		0.2		% of FS
Alignment Error[1]			±1		Degrees
Transverse Sensitivity[2]			±2		%
SENSITIVITY					
Initial Sensitivity at V_{PR}	+25°C	16.1	19.0	21.9	mV/*g*
Temperature Drift[3]			0.75/1.0		% of Reading
ZERO *g* BIAS LEVEL	at V_{PR}				
Initial Offset		1.55/1.60	1.80	2.05/2.00	V
vs. Temperature[3]			±15/35		mV
vs. Supply	V_S = 4.75 V to 5.25 V		10	32	mV/V
NOISE PERFORMANCE	at V_{PR}				
Voltage Noise Density	BW = 10 Hz to 1 kHz		6.6	12	m*g*/$\sqrt{\text{Hz}}$
Noise in 100 Hz Bandwidth			66		m*g* rms
Noise in 10 Hz Bandwidth			20		m*g* rms
FREQUENCY RESPONSE					
3 dB Bandwidth[4]	C1 = 0.022 µF (See Figure 22)	800	1300		Hz
3 dB Bandwidth[4]	C1 = 0.0068 µF		10		kHz
Sensor Resonant Frequency			24		kHz
SELF TEST INPUT					
Output Change at V_{PR}[5]	ST Pin from Logic "0" to "1"	–0.85	–1.00	–1.15	V
Logic "1" Voltage		2.0			V
Logic "0" Voltage				0.8	V
Input Resistance	To Common		50		kΩ
+3.4 V REFERENCE					
Output Voltage		3.350	3.400	3.450	V
Output Temperature Drift[3]			±10		mV
Power Supply Rejection	DC, V_S = +4.75 V to +5.25 V		1	10	mV/V
Output Current	Sourcing	500			µA
PREAMPLIFIER OUTPUT					
Voltage Swing		0.25		V_S – 1.4	V
Current Output	Source or Sink	30	80		µA
Capacitive Load Drive			100		pF
BUFFER AMPLIFIER					
Input Offset Voltage[6]	Delta from Nominal 1.800 V		±10	±25	mV
Input Bias Current			5	20	nA
Open-Loop Gain	DC		80		dB
Unity Gain Bandwidth			200		kHz
Output Voltage Swing	I_{OUT} = ±100 µA	0.25		V_S – 0.25	V
Capacitive Load Drive		1000			pF
Power Supply Rejection	DC, V_S = +4.75 V to +5.25 V		1	10	mV/V
POWER SUPPLY					
Operating Voltage Range		4.75		5.25	V
Quiescent Supply Current			10	13	mA
TEMPERATURE RANGE					
Operating Range J		0		+70	°C
Specified Performance A		–40		+85	°C
Automotive Grade*		–40		+125	°C

NOTES

[1]Alignment error is specified as the angle between the true and indicated axis of sensitivity, (see Figure 2).

[2]Transverse sensitivity is measured with an applied acceleration that is 90° from the indicated axis of sensitivity. Transverse sensitivity is specified as the percent of transverse acceleration that appears at the V_{PR} output. This is the algebraic sum of the alignment and the inherent sensor sensitivity errors, (see Figure 2).

[3]Specification refers to the maximum change in parameter from its initial at +25°C to its worst case value at T_{MIN} to T_{MAX}.

[4]Frequency at which response is 3 dB down from dc response assuming an exact C1 value is used. Maximum recommended BW is 10 kHz using a 0.007 µF capacitor, refer to Figure 22.

[5]Applying logic high to the self-test input has the effect of applying an acceleration of –52.6 *g* to the ADXL50.

[6]Input offset voltage is defined as the output voltage differential from 1.800 V when the amplifier is connected as a follower (i.e., Pins 9 and 10 tied together). The voltage at Pin 9 has a temperature drift proportional to that of the 3.4 V reference.

*Contact factory for availability of automotive grade devices.

All min and max specifications are guaranteed. Typical specifications are not tested or guaranteed.
Specifications subject to change without notice.

ABSOLUTE MAXIMUM RATINGS*

Acceleration (Any Axis, Unpowered for 0.5 ms) . . . . . 2000 g
Acceleration (Any Axis, Powered for 0.5 ms) . . . . . 500 g
$+V_S$ . . . . . –0.3 V to +7.0 V
Output Short Circuit Duration
(V_{PR}, V_{OUT}, V_{REF} Terminals to Common) . . . . . Indefinite
Operating Temperature . . . . . –55°C to +125°C
Storage Temperature . . . . . –65°C to +150°C

*Stresses above those listed under "Absolute Maximum Ratings" may cause permanent damage to the device. This is a stress rating only; the functional operation of the device at these or any other conditions above those indicated in the operational sections of this specification is not implied. Exposure to absolute maximum rating conditions for extended periods may affect device reliability.

Package Characteristics

Package	θ_{JA}	θ_{JC}	Device Weight
10-Pin TO-100	130°C/W	30°C/W	5 Grams

ORDERING GUIDE

Model	Temperature Range
ADXL50JH	0°C to +70°C
ADXL50AH	–40°C to +85°C

CAUTION

ESD (electrostatic discharge) sensitive device. Electrostatic charges as high as 4000 V readily accumulate on the human body and test equipment and can discharge without detection. Although the ADXL50 features proprietary ESD protection circuitry, permanent damage may occur on devices subjected to high energy electrostatic discharges. Therefore, proper ESD precautions are recommended to avoid performance degradation or loss of functionality.



PIN DESCRIPTION

+5 V	The power supply input pin.
C2	Connection for an external bypass capacitor (nominally 0.022 µF) used to prevent oscillator switching noise from interfering with other ADXL50 circuitry. Please see the section on component selection.
C1	Connections for the demodulator capacitor, nominally 0.022 µF. See the section on component selection for application information.
COM	The power supply common (or "ground") connection.
V_{REF}	Output of the internal 3.4 V voltage reference.
ST	The digital self-test input. It is both CMOS and TTL compatible.
V_{PR}	The ADXL50 preamplifier output providing an output voltage of 19 mV per g of acceleration.
V_{OUT}	Output of the uncommitted buffer amplifier.
V_{IN-}	The inverting input of the uncommitted buffer amplifier.

CONNECTION DIAGRAM
10-Header (TO-100)

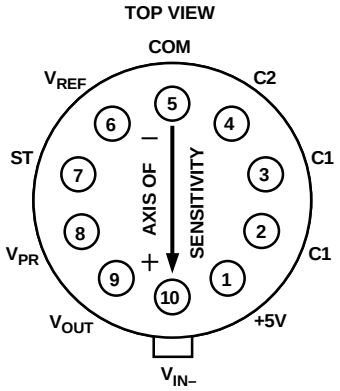

NOTES:

AXIS OF SENSITIVITY IS ALONG A LINE BETWEEN PIN 5 AND THE TAB.

THE CASE OF THE METAL CAN PACKAGE IS CONNECTED TO PIN 5 (COMMON).

ARROW INDICATES DIRECTION OF POSITIVE ACCELERATION ALONG AXIS OF SENSITIVITY.

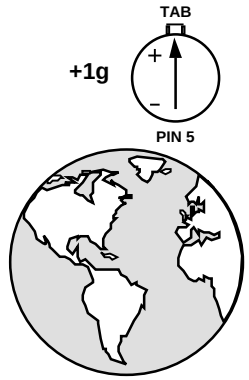

Figure 1. Output Polarity at V_{PR}

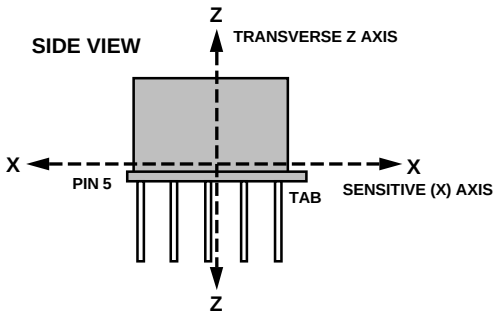

Figure 2a. Sensitive X and Transverse Z Axis

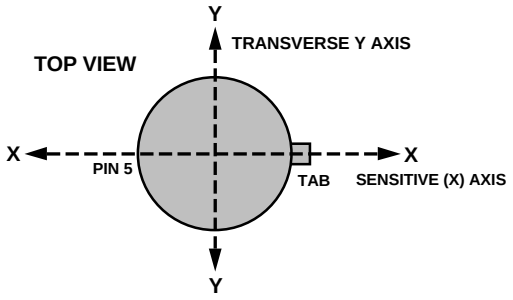

Figure 2b. Sensitive X and Transverse Y Axis

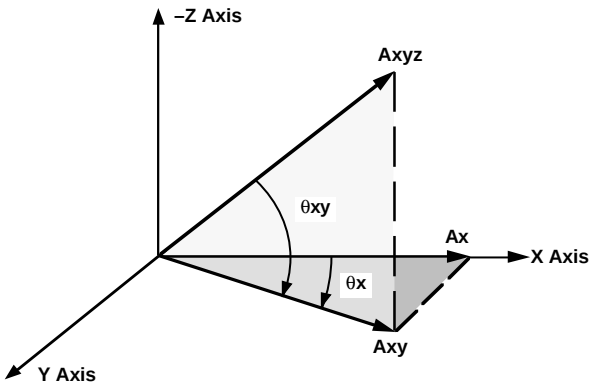

Figure 2c. A Vector Analysis of an Acceleration Acting Upon the ADXL50 in Three Dimensions

Polarity of the Acceleration Output

The polarity of the ADXL50 output is shown in the Figure 1. When oriented to the earth's gravity (and held in place), the ADXL50 will experience an acceleration of +1 g. This corresponds to a change of approximately +19 mV at the V_{PR} output pin. Note that the polarity will be reversed to a negative going signal at the buffer amplifier output V_{OUT}, due to its inverting configuration.

Mounting Considerations

There are three main causes of measurement error when using accelerometers. The first two are alignment and transverse sensitivity errors. The third source of error is due to resonances or vibrations of the sensor in its mounting fixture.

Errors Due to Misalignment

The ADXL50 is a sensor designed to measure accelerations that result from an applied force. Because these forces act on the sensor in a vector manner, the alignment of the sensor to the force to be measured may be critical.

The ADXL50 responds to the component of acceleration on its sensitive X axis. Figures 2a and 2b show the relationship between the sensitive "X" axis and the transverse "Z" and "Y" axes as they relate to the TO-100 package.

Figure 2c describes a three dimensional acceleration vector (A_{XYZ}) which might act on the sensor, where A_X is the component of interest. To determine A_X, first, the component of acceleration in the XY plane (A_{XY}) is found using the cosine law:

$$A_{XY} = A_{XYZ} (cos\theta_{XY}) \text{ then}$$

$$A_X = A_{XY} (\cos\theta_X)$$

$$\text{Therefore: Typical } V_{PR} = 19\ mV/g\ (A_{XYZ})\ (cos\theta_{XY})\ cos\theta_X$$

Note that an ideal sensor will react to forces along or at angles to its sensitive axis but will reject signals from its various transverse axes, i.e., those exactly 90° from the sensitive "X" axis. But even an ideal sensor will produce output signals if the transverse signals are not exactly 90° to the sensitive axis. An acceleration that is acting on the sensor from a direction different from the sensitive axis will show up at the ADXL50 output at a reduced amplitude.

Table I. Ideal Output Signals for Off Axis Applied Accelerations Disregarding Device Alignment and Transverse Sensitivity Errors

θ_X	% of Signal Appearing at Output	Output in gs for a 50 g Applied Acceleration
0	100%	50 (On Axis)
1°	99 98%	49.99
2°	99.94%	49.97
3°	99.86%	49.93
5°	99.62%	49.81
10°	98.48%	49.24
30°	86.60%	43.30
45°	70.71%	35.36
60°	50.00%	25.00
80°	17.36%	8.68
85°	8.72%	4.36
87°	5.25%	2.63
88°	3.49%	1.75
89°	1.7%	0.85
90°	0%	0.00 (Transverse Axis)

Table I shows the percentage signals resulting from various θ_X angles. Note that small errors in alignment have a negligible effect on the output signal. A 1° error will only cause a 0.02% error in the signal. Note, however, that a signal coming 1° off of the transverse axis (i.e., 89° off the sensitive axis) will still contribute 1.7% of its signal to the output. Thus large transverse signals could cause output signals as large as the signals of interest.

Table I may also be used to approximate the effect of the ADXL50's internal errors due to misalignment of the die to the package. For example: a 1 degree sensor alignment error will allow 1.7% of a transverse signal to appear at the output. In a nonideal sensor, transverse sensitivity may also occur due to inherent sensor properties. That is, if the sensor physically moves due to a force applied exactly 90° to its sensitive axis, then this might be detected as an output signal, whereas an ideal sensor would reject such signals. In every day use, alignment errors may cause a small output peak with accelerations applied close to the sensitive axis but the largest errors are normally due to large accelerations applied close to the transverse axis.

Errors Due to Mounting Fixture Resonances

A common source of error in acceleration sensing is resonance of the mounting fixture. For example, the circuit board that the ADXL50 mounts to may have resonant frequencies in the same range as the signals of interest. This could cause the signals measured to be larger than they really are. A common solution to this problem is to dampen these resonances by mounting the ADXL50 near a mounting post or by adding extra screws to hold the board more securely in place.

When testing the accelerometer in your end application, it is recommended that you test the application at a variety of frequencies in order to ensure that no major resonance problems exist.

GLOSSARY OF TERMS

Acceleration: Change in velocity per unit time.

Acceleration Vector: Vector describing the net acceleration acting upon the ADXL50 (A_{XYZ}).

g: A unit of acceleration equal to the average force of gravity occurring at the earth's surface. A g is approximately equal to 32.17 feet/s^2, or 9.807 meters/s^2.

Nonlinearity: The maximum deviation of the ADXL50 output voltage from a best fit straight line fitted to a plot of acceleration vs. output voltage, calculated as a % of the full-scale output voltage (@ 50 g).

Resonant Frequency: The natural frequency of vibration of the ADXL50 sensor's central plate (or "beam"). At its resonant frequency of 24 kHz, the ADXL50's moving center plate has a peak in its frequency response with a Q of 3 or 4.

Sensitivity: The output voltage change per g unit of acceleration applied, specified at the V_{PR} pin in mV/g.

Sensitive Axis (X): The most sensitive axis of the accelerometer sensor. Defined by a line drawn between the package tab and Pin 5 in the plane of the pin circle. See Figures 2a and 2b.

Sensor Alignment Error: Misalignment between the ADXL50's on-chip sensor and the package axis, defined by Pin 5 and the package tab.

Total Alignment Error: Net misalignment of the ADXL50's on-chip sensor and the measurement axis of the application. This error includes errors due to sensor die alignment to the package, and any misalignment due to installation of the sensor package in a circuit board or module.

Transverse Acceleration: Any acceleration applied 90° to the axis of sensitivity.

Transverse Sensitivity Error: The percent of a transverse acceleration that appears at the V_{PR} output. For example, if the transverse sensitivity is 1%, then a +10 g transverse acceleration will cause a 0.1 g signal to appear at V_{PR} (1% of 10 g). Transverse sensitivity can result from a sensitivity of the sensor to transverse forces or from misalignment of the internal sensor to its package.

Transverse Y Axis: The axis perpendicular (90°) to the package axis of sensitivity in the plane of the package pin circle. See Figure 2.

Transverse Z Axis: The axis perpendicular (90°) to both the package axis of sensitivity and the plane of the package pin circle. See Figure 2.

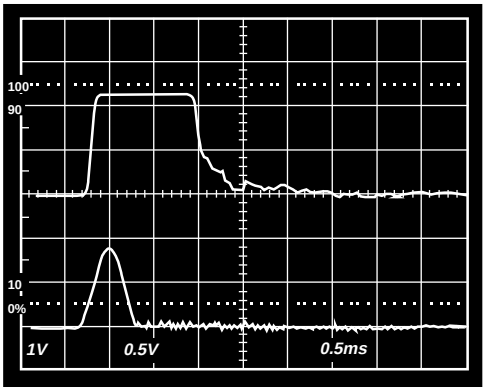

Figure 3. 500 g Shock Overload Recovery. Top Trace: ADXL50 Output. Bottom Trace: Reference Accelerometer Output

ADXL50–Typical Characteristics

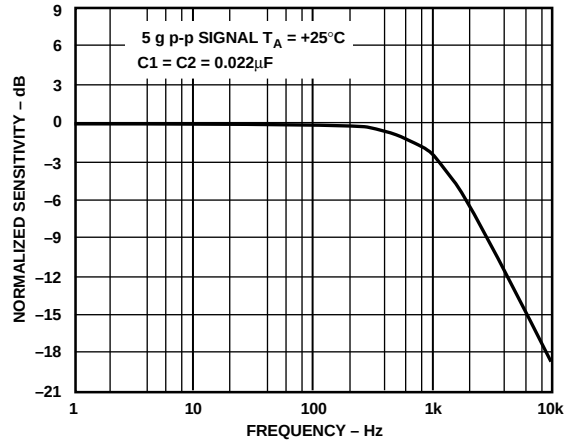

Figure 4. Normalized Sensitivity vs. Frequency

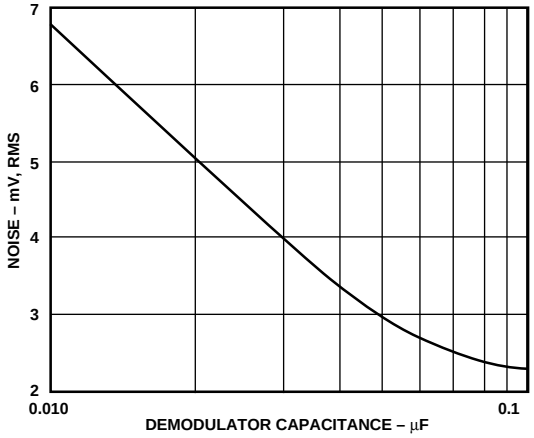

Figure 7. RMS Noise vs. Value of Demodulator Capacitor, C1

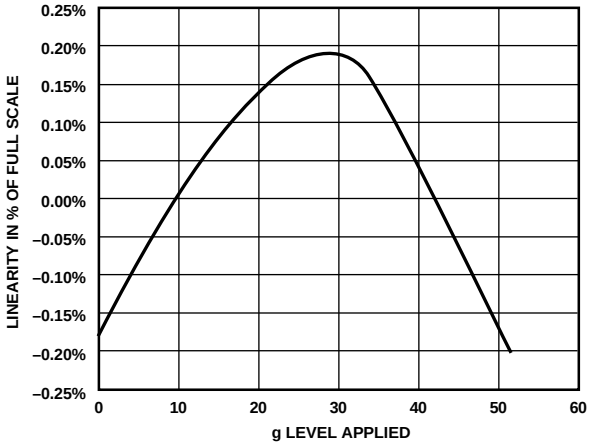

Figure 5. Linearity in Percent of Full Scale

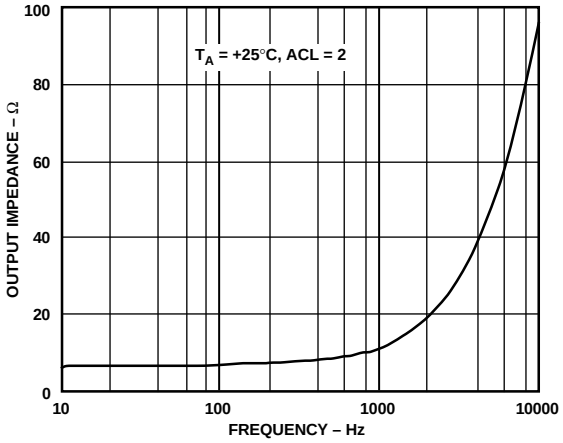

Figure 8. Buffer Amplifier Output Impedance vs. Frequency

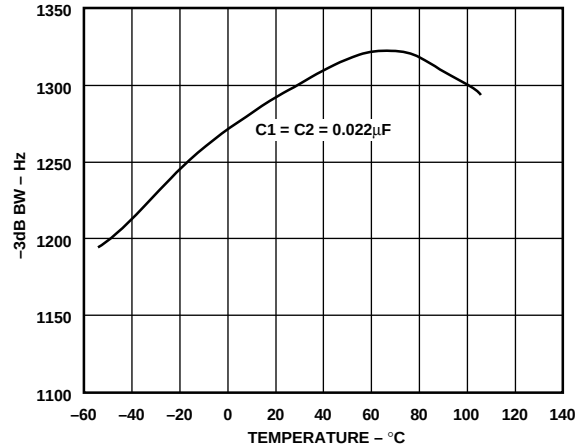

Figure 6. –3 dB Bandwidth vs. Temperature at V_{PR}

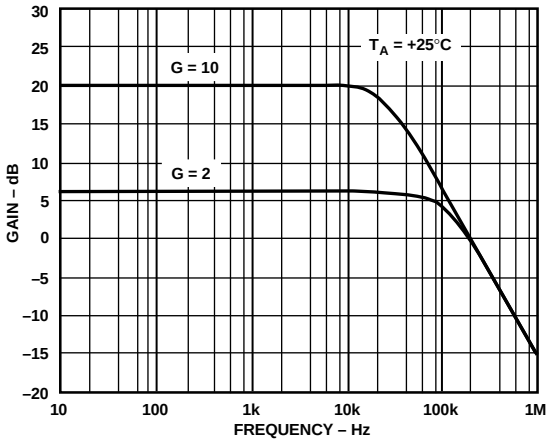

Figure 9. Buffer Amplifier Closed-Loop Gain vs. Frequency

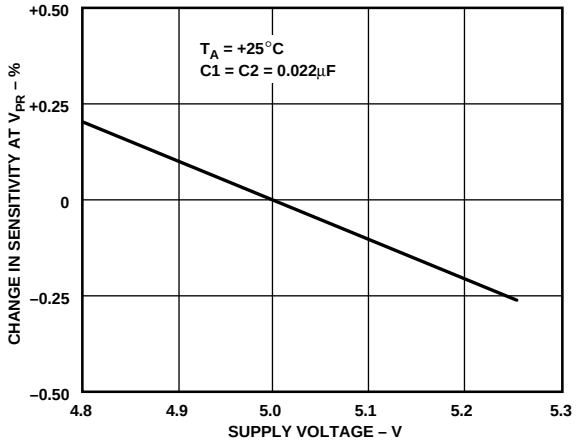

Figure 10. Change in Sensitivity vs. Supply Voltage

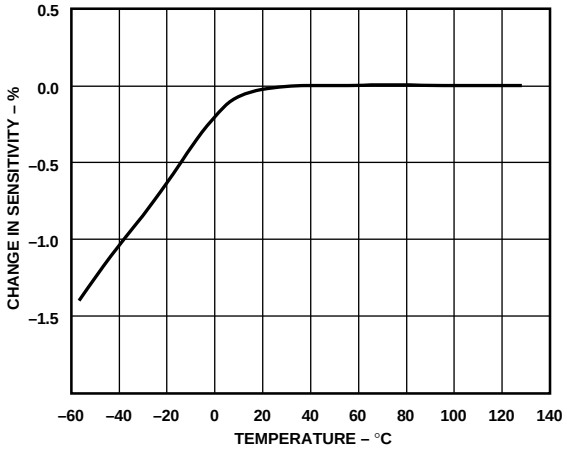

Figure 13. Percent Change in Sensitivity at V_{PR} vs. Temperature

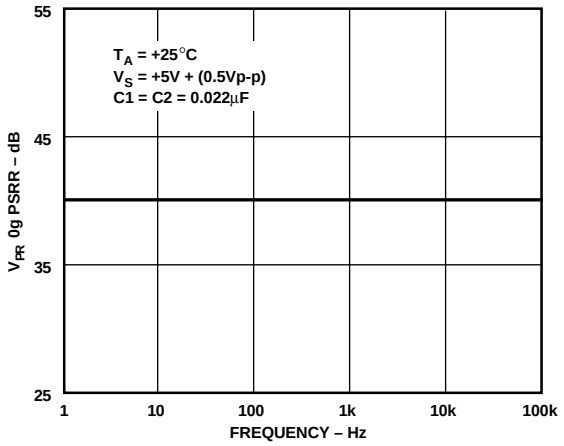

Figure 11. V_{PR} 0 g PSRR vs. Frequency

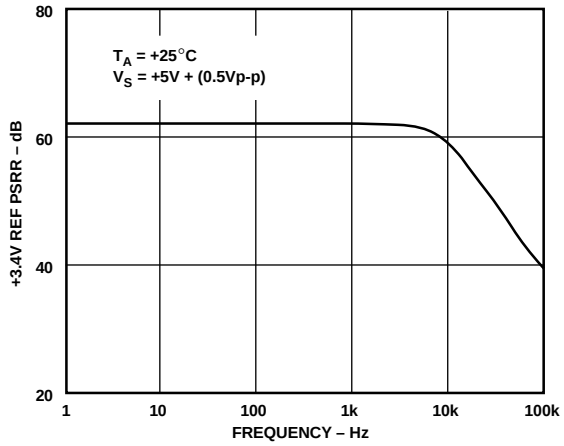

Figure 14. +3.4 V REF PSRR vs. Frequency

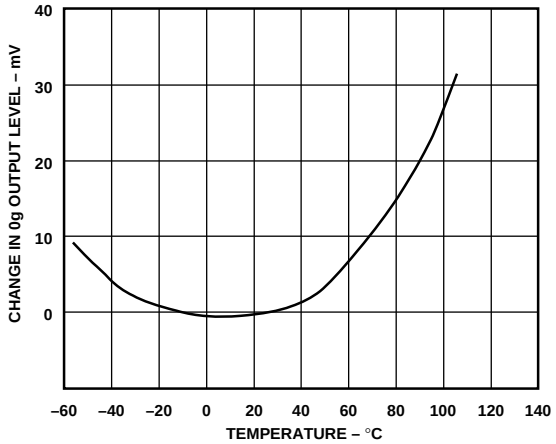

Figure 12. 0 g Bias Level vs. Temperature

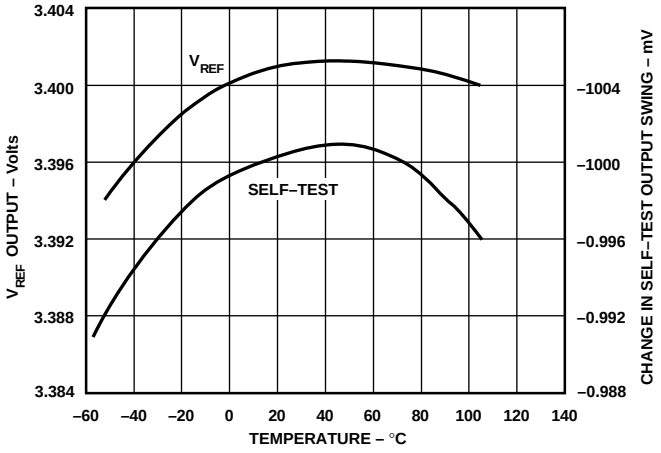

Figure 15. V_{REF} Output and Change in Self-Test Output Swing vs. Temperature

THEORY OF OPERATION

The ADXL50 is a complete acceleration measurement system on a single monolithic IC. It contains a polysilicon surface-micro machined sensor and signal conditioning circuitry. The ADXL50 is capable of measuring both positive and negative acceleration to a maximum level of ±50 g.

Figure 16 is a simplified view of the ADXL50's acceleration sensor at rest. The actual structure of the sensor consists of 42 unit cells and a common beam. The differential capacitor sensor consists of independent fixed plates and a movable "floating" central plate which deflects in response to changes in relative motion. The two capacitors are series connected, forming a capacitive divider with a common movable central plate. A force balance technique counters any impeding deflection due to acceleration and servos the sensor back to its 0 g position.

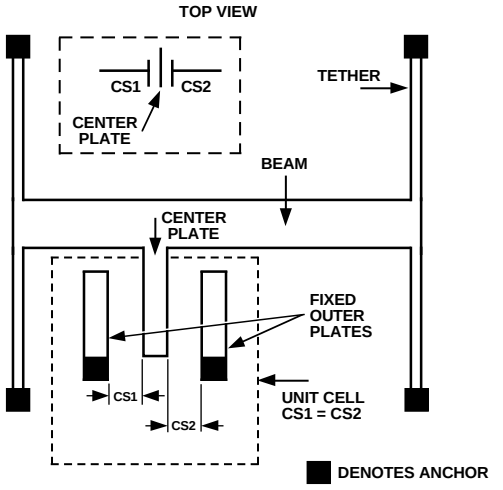

Figure 16. A Simplified Diagram of the ADXL50 Sensor at Rest

Figure 17 shows the sensor responding to an applied acceleration. When this occurs, the common central plate or "beam" moves closer to one of the fixed plates while moving further from the other. The sensor's fixed capacitor plates are driven deferentially by a 1 MHz square wave: the two square wave amplitudes are equal but are 180° out of phase from one another. When at rest, the values of the two capacitors are the same and therefore, the voltage output at their electrical center (i.e., at the center plate) is zero.

When the sensor begins to move, a mismatch in the value of their capacitance is created producing an output signal at the central plate. The output amplitude will increase with the amount of acceleration experienced by the sensor. Information concerning the direction of beam motion is contained in the phase of the signal with synchronous demodulation being used to extract this information. Note that the sensor needs to be positioned so that the measured acceleration is along its sensitive axis.

Figure 18 shows a block diagram of the ADXL50. The voltage output from the central plate of the sensor is buffered and then applied to a synchronous demodulator. The demodulator is also supplied with a (nominal) 1 MHz clock signal from the same oscillator which drives the fixed plates of the sensor. The demodulator will rectify any voltage which is in sync with its clock signal. If the applied voltage is in sync and in phase with the clock, a positive output will result. If the applied voltage is in sync but 180° out of phase with the clock, then the demodulator's output will be negative. All other signals will be rejected. An external capacitor, C1, sets the bandwidth of the demodulator.

The output of the synchronous demodulator drives the preamp —an instrumentation amplifier buffer which is referenced to +1.8 volts. The output of the preamp is fed back to the sensor through a 3 MΩ isolation resistor. The correction voltage required to hold the sensor's center plate in the 0 g position is a direct measure of the applied acceleration and appears at the V_{PR} pin.

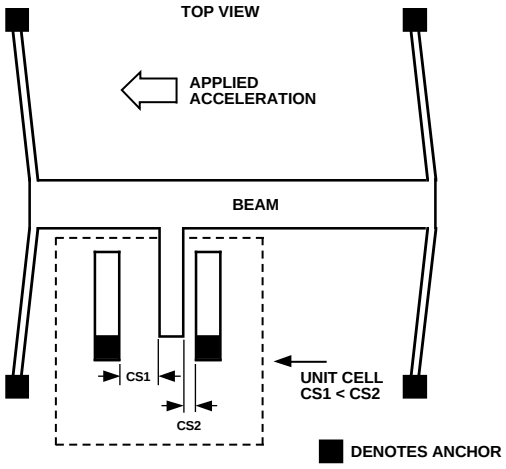

Figure 17. The ADXL50 Sensor Momentarily Responding to an Externally Applied Acceleration

When the ADXL50 is subjected to an acceleration, its capacitive sensor begins to move creating a momentary output signal. This is signal conditioned and amplified by the demodulator and preamp circuits. The dc voltage appearing at the preamp output is then fed back to the sensor and electrostatically forces the center plate back to its original center position.

At 0 g the ADXL50 is calibrated to provide +1.8 volts at the V_{PR} pin. With an applied acceleration, the V_{PR} voltage changes to the voltage required to hold the sensor stationary for the duration of the acceleration and provides an output which varies directly with applied acceleration.

The loop bandwidth corresponds to the time required to apply feedback to the sensor and is set by external capacitor C1. The loop response is fast enough to follow changes in g level up to and exceeding 1 kHz. The ADXL50's ability to maintain a flat response over this bandwidth keeps the sensor virtually motionless. This essentially eliminates any nonlinearity or aging effects due to the sensor beam's mechanical spring constant, as compared to an open-loop sensor.

An uncommitted buffer amplifier provides the capability to adjust the scale factor and 0 g offset level over a wide range. An internal reference supplies the necessary regulated voltages for powering the chip and +3.4 volts for external use.

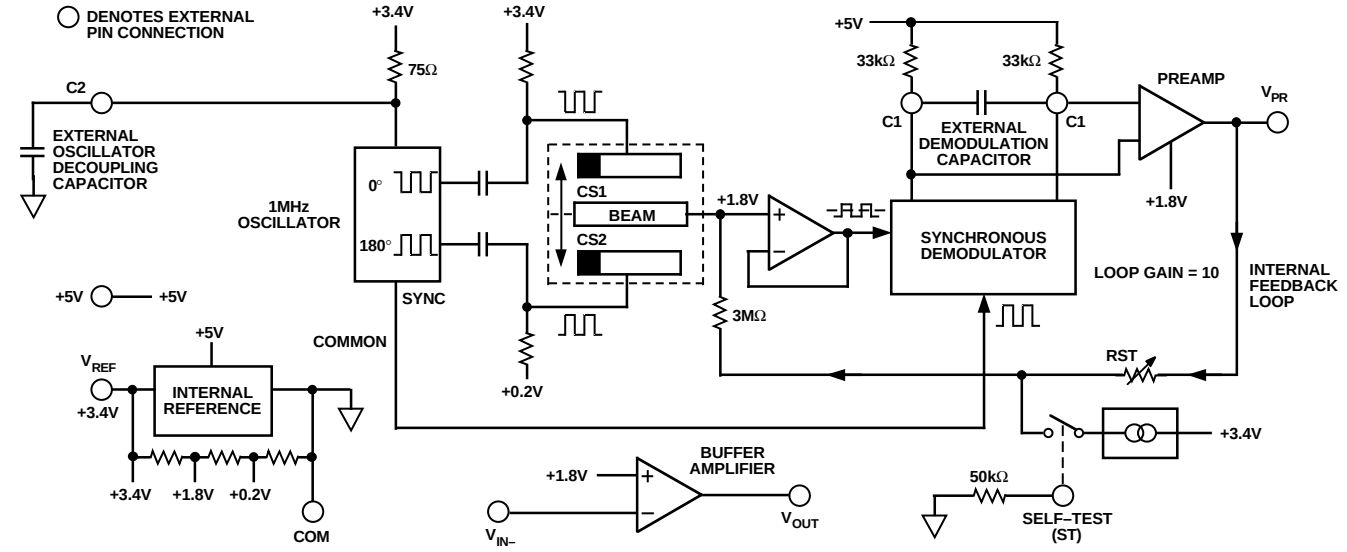

Figure 18. Functional Block Diagram

The sensor's tight mechanical spacing allows it to be electrostatically deflected to full scale while operating on a 5 volt supply. A self-test is initiated by applying a TTL "high" level voltage (>+2.0 V) to the ADXL50's self-test pin which causes the chip to apply a deflection voltage to the beam which moves it an amount equal to –50 g (the negative full-scale output of the device). Note that the ±10% tolerance of the self-test circuit is not proportional to the sensitivity error, see Self-Test section.

The output of the ADXL50's preamplifier is 1.8 V at 0 g acceleration with an output range of ±0.95 V for a ±50 g input, i.e., 19 mV/g. An uncommitted buffer amplifier has been included on-chip to enhance the user's ability to offset the 0 g signal level and to amplify and filter the signal. Access is provided to both the inverting input and the output of this amplifier via pins V_{OUT} and V_{IN-}, while the noninverting input is connected internally to a +1.8 V reference. The +1.8 V is derived from a resistor divider connected to the 3.4 V reference.

BASIC CONNECTIONS FOR THE ADXL50

Figure 19 shows the basic connections needed for the ADXL50 to measure accelerations in the ±50 g range with an output scale factor 40 mV/g corresponding to a 2.5 V 0 g level, a ±2.0 V full-scale swing around 0 g and a 3 dB bandwidth of approximately 1 kHz.

In general, the designer will need to take into account the initial zero g bias when designing circuits. For the ADXL50J this offset is 1.8 V ± 250 mV. When microprocessors and software

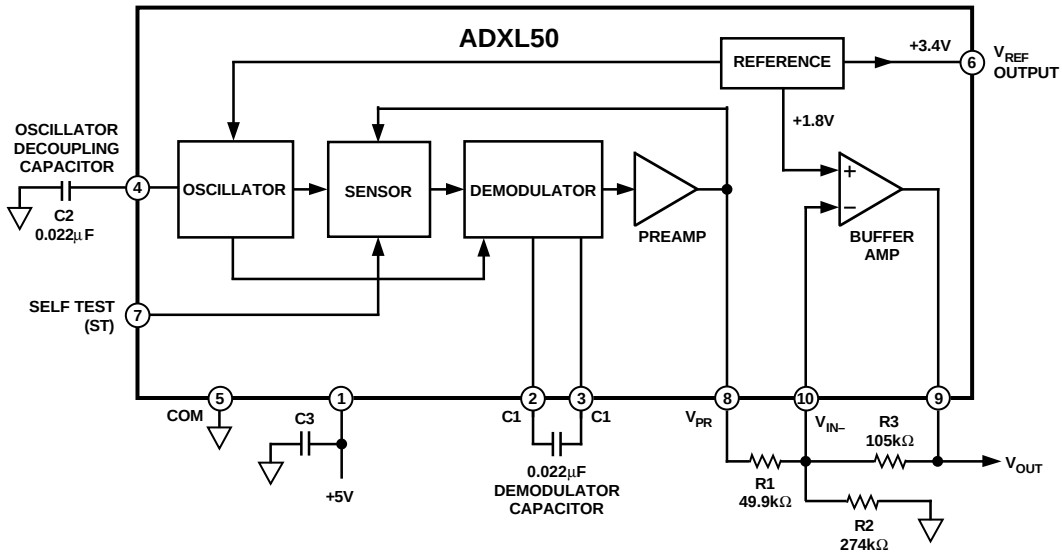

Figure 19. ADXL50 Application Providing an Output Sensitivity of 40 mV/g, a +2.5 V 0 g Level and a Bandwidth of 1 kHz

calibration are used and there is a desire to eliminate trim potentiometers, the design should leave room at either supply rail to account for signal swing and or variations in initial zero g bias.

For example, in the circuit in Figure 19, the initial zero g bias of ±250 mV will be reflected to the output by the gain of the R3/R1 network, resulting in an output offset of ±526 mV worst case. The offset, combined with a full-scale signal of 50 g, (+2.0 V) will cause the output buffer amplifier to saturate at the supply rail.

The full ±2.25 V output swing of the buffer amplifier can be utilized if the user is able to trim the zero-g bias to exactly 2.5 V. In applications where the full-scale range will be ±25 g or less, a bias trim such as that shown in Figure 20 will almost always be required.

VARYING THE OUTPUT SENSITIVITY AND 0 g LEVEL USING THE INTERNAL BUFFER AMPLIFIER

The uncommitted buffer amplifier may be used to change the output sensitivity to provide useful full-scale ranges of ±50 g and below. Table II provides recommended resistor values for several standard ranges down to ±10 g. As the full-scale range is decreased, buffer amplifier gain is increased, and the noise contribution as a percentage of full scale will also increase. For all ranges, the signal-to-noise ratio can be improved by reducing the circuit bandwidth, either by increasing the demodulator capacitor, C1, or by adding a post filter using the buffer amplifier.

Table II. Recommended Resistor Values for Setting the Circuit of Figure 20 to Several Common Full-Scale Ranges

FS (g)	Buffer Gain	SF in mV/g	R1	R3	R2
±50.0	2.11	40	49.9 k	105 k	100 k
±40.0	2.63	50	39.2 k	103 k	100 k
±30.8	3.42	65	40.2 k	137 k	100 k
±26.7	3.95	75	28.7 k	113 k	100 k
±20.0	5.26	100	26.1 k	137 k	100 k
±10.0	10.53	200	23.7 k	249 k	100 k

Note that the value of resistor R1 should be selected to limit the output current flowing into V_{PR} to less than 25 µA (to provide a safety margin). For a "J" grade device, this current is equal to:

$$I_{PR} = \frac{(2.05\ V - The\ peak\ full\text{-}scale\ output\ voltage\ at\ V_{PR}) - 1.8\ V}{R1\ in\ ohms}$$

For a ±50 g full-scale range, R1 needs to be 49.9 kΩ or larger in value; but at the lower full-scale g ranges, if the V_{PR} swing is much less, then it is possible to use much lower resistance values. For this table, the circuit of Figure 20 is used, as a 0 g offset trim will be required for most applications. In all cases, it is assumed that the zero-g bias level is 2.5 V with an output span of ±2 V.

Note that for full scales below ±20 g the self-test is unlikely to operate correctly because the V_{PR} pull-down current is not guaranteed to be large enough to drive R1 to the required –1.0 V swing. In these cases, the self-test command will cause V_{OUT} to saturate at the rail, and it will be necessary to monitor the self-test at V_{PR}. Self-test can remain operational at V_{PR} for all g ranges listed by keeping R1 > 49.9 kΩ, with the subsequent tradeoff that the required values for R3 will become very large. The user always has the option of adding external gain and filtering stages after the ADXL50 to make lower full-scale ranges.

Measuring Full-Scale Accelerations Less than ±5 g

Applications, such as motion detection, and tilt sensing, have signal amplitudes in the 1 g to 2 g range. Although designed for higher full-scale ranges, the ADXL50 may be adapted for use in low g applications; the two main design considerations are noise and 0 g offset drift (BH, KH grades recommended).

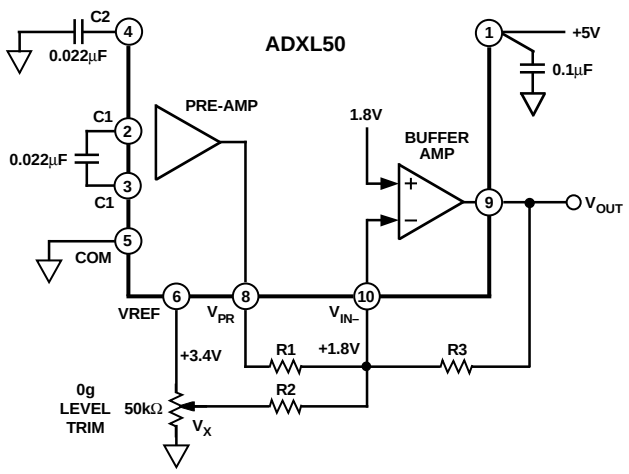

Figure 20. ADXL50 Circuit Using the Buffer Amplifier to Set the Output Scaling and 0 g Offset Level

At its full 1 kHz bandwidth, the ADXL50 will typically exhibit 1 g p-p of noise. With ±50 g accelerations this is generally not a problem, but at a ±2 g full-scale level the signal-to-noise ratio will be very poor. However, reducing the bandwidth to 100 Hz or less considerably improves the S/N ratio. Figure 25 shows the relationship between ADXL50 bandwidth and noise.

The ADXL50 exhibits offset drifts that are typically 0.02 g per °C but which may be as large as 0.1 g per °C. With the buffer amplifier configured for a 2 g full scale, the ADXL50 will typically drift 1/2 of its full-scale range with a 50°C increase in temperature.

There are several cures for offset drift. If a dc response is not required, for example in motion sensing or vibration measurement applications, consider ac coupling the acceleration signal to remove the effects of offset drift. See the section on ac coupling.

Periodically recalibrating the accelerometer's 0 g level is another option. Autozero or long term averaging can be used to remove long term drift using a microprocessor or the autozero circuit of Figure 29. Be sure to keep the buffer amplifier's full-scale output range much larger than the measurement range to allow for the 0 g level drift.

CALCULATING COMPONENT VALUES FOR SCALE FACTOR AND 0 g SIGNAL LEVEL

The ADXL50 buffer's scale factor is set by –R3/R1 (since the amplifier is in the inverter mode).

As an example, if the desired span is ±2.0 V for a = ±50 g input, then R3/R1 should be chosen such that

$$R3/R1 = V_{OUT}\ Span/V_{PR}\ Span = 2.00/0.95 = 2.105 \quad (1)$$

where V_{PR} span is the output from the preamplifier and V_{OUT} span is the buffer amplifier's output, giving

$$R3 = 2.105 \times R1 \quad (2)$$

In noncritical applications, a resistor, R2, may simply be connected between V_{IN-} and common to provide an approximate 0 g offset level (see Figure 19). In this simplified configuration R2 is found using:

$$R2 = (1.8\ V \times R3)/(V_{OUT}\ @\ 0\ g - 1.8\ V)$$

When used with a trim potentiometer, as in Figure 20, resistor R2 sets the 0 g offset range and also sets the resolution of the offset trim. A value of 100 kΩ is typical. Increasing R2 above this value makes trimming the offset easier, but may not provide enough trim range to set V_{OUT} equal to +2.5 V for all devices.

To provide an output span of ±2.00 V, with a 0 g output of +2.5 V, R1 could be set to the standard value of 49.9 kΩ and from Equation 2, R3 = 105 kΩ.

For Figure 20, the circuit transfer function is:

$$V_{OUT} = \left(\frac{R3}{R1}(1.8\ V - V_{PR})\right) + \left(\frac{R3}{R2}(1.8\ V - V_X)\right) + 1.8\ V$$

The summing amplifier configuration allows noninteractive trimming of offset and span. Since V_{PR} is not always exactly 1.8 V at 0 g, it will contribute to output offset. Therefore, span must be trimmed first, followed by 0 g offset adjustment.

LOAD DRIVE CAPABILITIES OF THE V_{PR} AND BUFFER OUTPUTS

The V_{PR} and the buffer amplifier outputs are both capable of driving a load to voltage levels approaching that of the supply rail. However, both outputs are limited in how much current they can supply, affecting component selection.

V_{PR} Output

The V_{PR} pin has the ability to source current up to 500 µA but only has a sinking capability of 30 µA which limits its ability to drive loads. It is recommended that the buffer amplifier be used in most applications, to avoid loading down V_{PR}. In standard ±50 g applications, the resistor R1 from V_{PR} to V_{IN-} is recommended to have a value greater than 50 kΩ to reduce loading effects.

Capacitive loading of the V_{PR} pin should be minimized. A load capacitance between the V_{PR} pin and common will introduce an offset of approximately 1 mV for every 10 pF of load. The V_{PR} pin may be used to directly drive an A/D input or other source as long as these sensitivities are taken into account. It is always preferable to drive A/D converters or other sources using the buffer amplifier (or an external op amp) instead of the V_{PR} pin.

Buffer Amplifier Output

The buffer output can drive a load to within 0.25 V of either power supply rail and is capable of driving 1000 pF capacitive loads. Note that a capacitance connected across the buffer feedback resistor for low-pass filtering does not appear as a capacitive load to the buffer. The buffer amplifier is limited to sourcing or sinking a maximum of 100 µA. Component values for the resistor network should be selected to ensure that the buffer amplifier can drive the filter under worst case transient conditions.

SELF-TEST FUNCTION

The digital self-test input is compatible with both CMOS and TTL signals. A Logic "l" applied to the self-test (ST) input will cause an electrostatic force to be applied to the sensor which will cause it to deflect to the approximate negative full-scale output of the device. Accordingly, a correctly functioning accelerometer will respond by initiating an approximate –1 volt output change at V_{PR}. If the ADXL50 is experiencing an acceleration when the self-test is initiated, the V_{PR} output will equal the algebraic sum of the two inputs. The output will stay at the self-test level as long as the ST input remains high and will return to the 0 g level when the ST voltage is removed.

A self-test output that varies more than ±10% from the nominal –1.0 V change indicates a defective beam or a circuit problem such as an open or shorted pin or component.

Operating the ADXL50's buffer amplifier at Gains > 2, to provide full-scale outputs of less than ±50 g, may cause the self-test output to overdrive the buffer into saturation. The self-test may still be used in the case, but the change in the output must then be monitored at the V_{PR} pin instead of the buffer output.

Note that the value of the self-test delta is not an exact indication of the sensitivity (mV/g) of the ADXL50 and, therefore, may not be used to calibrate the device for sensitivity error.

In critical applications, it may be desirable to monitor shifts in the zero-g bias voltage from its initial value. A shift in the 0 g bias level may indicate that the 0 g level has shifted which may warrant an alarm.

POWER SUPPLY DECOUPLING

The ADXL50 power supply should be decoupled with a 0.1 µF ceramic capacitor from +5 V pin of the ADXL50 to common using very short component leads. For other decoupling considerations, see EMI/RFI section.

OSCILLATOR DECOUPLING CAPACITOR, C2

An oscillator decoupling capacitor, C2, is used to remove 1 MHz switching transients in the sensor excitation signal, and is required for proper operation of the ADXL50. A ceramic capacitor with a minimum value of 0.022 µF is recommended from the oscillator decoupling capacitor pin to common. Small amounts of capacitor leakage due to a dc resistance greater than l MΩ will not affect operation (i.e., a high quality capacitor is not needed here). As with the power supply bypass capacitor, very short component leads are recommended. Although 0.022 µF is a good typical value, it may be increased for reasons of convenience, but doing this will not improve the noise performance of the ADXL50.

DEMODULATOR CAPACITOR, C1

The demodulator capacitor is connected across Pins 2 and 3 to filter the demodulated signal from the sensor beam and to set the bandwidth of the force balance control loop. This capacitor may be used to approximately set the bandwidth of the accelerometer. A capacitor is always required for proper operation.

The frequency response of the ADXL50 exhibits a single pole roll-off response whose nominal 3 dB frequency is set by the following equation:

$$f_{3\,dB} = (28.60/C1\ in\ \mu F) \pm 40\%$$

A nominal value of 0.022 µF is recommended for C1. In general, the design bandwidth should be set 40% higher than the minimum desired system bandwidth due to the ±40% tolerance.

A minimum value of 0.015 µF is required, (over temperature and system life), to prevent device instability or oscillation. The demodulation capacitor should be a low leakage, low drift ceramic type with an NPO (best) or X7R (good) dielectric.

In general, it's best to use the recommended 0.022 µF capacitor across the demodulator pins and perform any additional low-pass filtering using the buffer amplifier. Using a large denominator capacitor for low-pass filtering has the disadvantage that the capacitive sensor will be slow to respond to rapid changes in acceleration and, therefore, the full shock survivability of the device could be compromised. The use of the buffer for low-pass filtering generally results in smaller capacitance values and better overall performance. It is also a convenient and more precise way to set the system bandwidth. Post filtering allows bandwidth to be controlled accurately by component selection and avoids the ±40% demodulation tolerance. Note that signal noise is proportional to the square root of the bandwidth of the ADXL50 and may be a consideration in component selection—see section on noise.

Care should be taken to reduce or eliminate any leakage paths from the demodulator capacitor pins to common or to the +5 V pin. Even a small imbalance in the leakage paths from these pins will result in offset shifts in the zero-g bias level. As an example, an unbalanced parasitic resistance of 30 MΩ from either demodulator pin to ground will result in an offset shift at V_{PR} of approximately 50 mV. Conformal coating of PC boards with a high impedance material is recommended to avoid leakage problems due to aging or moisture.

REDUCING THE AVERAGE POWER CONSUMPTION OF THE ADXL50

The ADXL50 is a versatile accelerometer that can be used in a wide variety of applications. In some battery powered applications, such as shipping recorders, power consumption is a critical parameter. The ADXL50 typically draws 10 mA current from a 5 V power supply which may exceed the power budgeted for the accelerometer.

For such applications, the ADXL50 can be successfully power cycled, where the power is turned on only during the period when data is sampled. Figure 21 illustrates the power-on settling of the ADXL50 during cycling where the output amplifier has a gain of one with no filtering. The settling time-constant is approximately 0.12 ms, waiting l ms before sampling ensures maximally accurate readings.

For example, to reduce the average power to 5 mW from its typical 50 mW, the power should be on 10% of the time. With the power on for 1 ms and off for 9 ms, a maximum sample rate of 100 Hz is achievable. Further reduction in average power can be realized with lower sample rates.

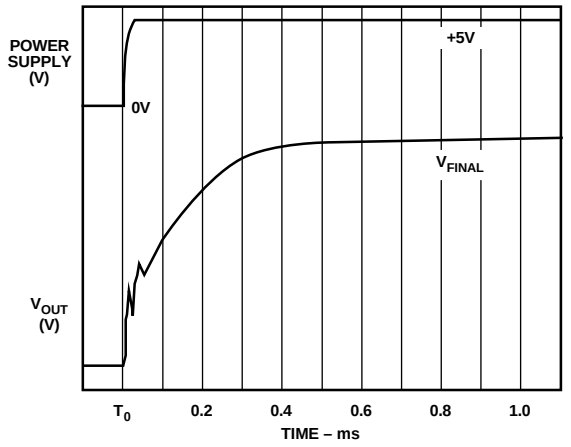

Figure 21. Power-On Settling Time when Power Cycling

SYSTEM BANDWIDTH CONTROL AND POST FILTERING

Unlike piezoresistive sensors, the resonant frequency of the ADXL50's capacitive sensor element is typically greater than 20 kHz and does not limit the useful bandwidth of the device. Usually, the resonant frequency of the beam appears as a peak in the bandwidth response at approximately 24 kHz with a Q of 3 to 4, as shown in Figure 22.

When using the recommended 0.022 µF demodulator capacitor, be advised that the nominal 1300 Hz pole it establishes within the device can vary ±40%. Therefore, if additional low-pass filtering is used—at frequencies much above 600 Hz—the two poles may interact and result in a net circuit bandwidth that is lower than expected.

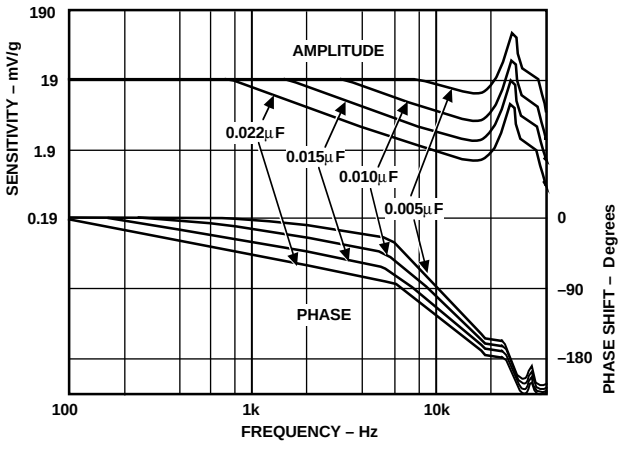

Figure 22. Frequency Response of the ADXL50 for Various Demodulator Capacitors

RECOMMENDED COMPONENT VALUES FOR VARIOUS FULL SCALE RANGES AND A 300Hz BANDWIDTH

FULL SCALE	mV per g	3dB BW (Hz)	R1a kΩ	R1b kΩ	R3 kΩ	R2 kΩ	C4 µF
±10 g	200	300	5	21.5	249	100	0.0022
±20 g	100	300	5	23.7	137	100	0.0039
±40 g	50	300	10	34	105	100	0.0056
±50 g	40	300	10	45.3	105	100	0.0056

$$3dB\ BW = \frac{1}{2\pi\ R3\ C4}$$

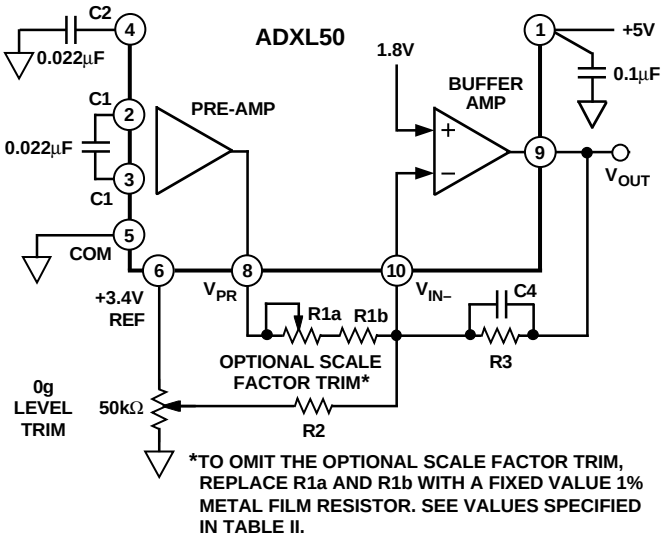

Figure 23. Using the Buffer Amplifier to Provide One Pole Post Filtering Plus Scale Factor and 0 g Level Trimming

ONE POLE POST FILTERING

Figure 23 shows the ADXL50 buffer amplifier connected to provide one pole post filtering, 0 g offset trimming, and output scaling. The table included with the figure lists practical component values for various full-scale g levels and approximate circuit bandwidths. For bandwidths other than those listed, use the formula:

Capacitor C4 in Farads = $1/(2\ \pi \times R3$ *in Ohms* $\times\ 3$ *dB BW in Hertz)*

or simply scale the value of capacitor C4 accordingly; i.e., for a ±20 g application with a 50 Hz bandwidth, the value of C4 will need to be twice as large as its 100 Hz value or 0.012 µF × 2 = 0.024 µF. The closest standard value of 0.022 µF should then be used.

TWO POLE POST FILTERING

Figure 24 shows a circuit which uses the ADXL50's buffer amplifier to provide two pole post filtering. An AD820 external op amp allows noninteractive adjustment of 0 g offset and scale factor. Component values for the two pole filter were selected to operate the buffer at unity gain with a Q of one.

2 POLE FILTER COMPONENT VALUES

3dB BW(Hz)	C3µF	C4µF
300	0.027	0.0033
100	0.082	0.01
30	0.27	0.033
10	0.82	0.1

OFFSET & SCALING AMPLIFIER COMPONENT VALUES

FULL SCALE	mV per g	GAIN	R4a kΩ	R4b kΩ	R5 kΩ
±10 g	200	10.53	5	21.5	249
±20 g	100	5.26	5	23.7	137
±40 g	50	2.63	10	34	105
±50 g	40	2.11	10	45.3	105

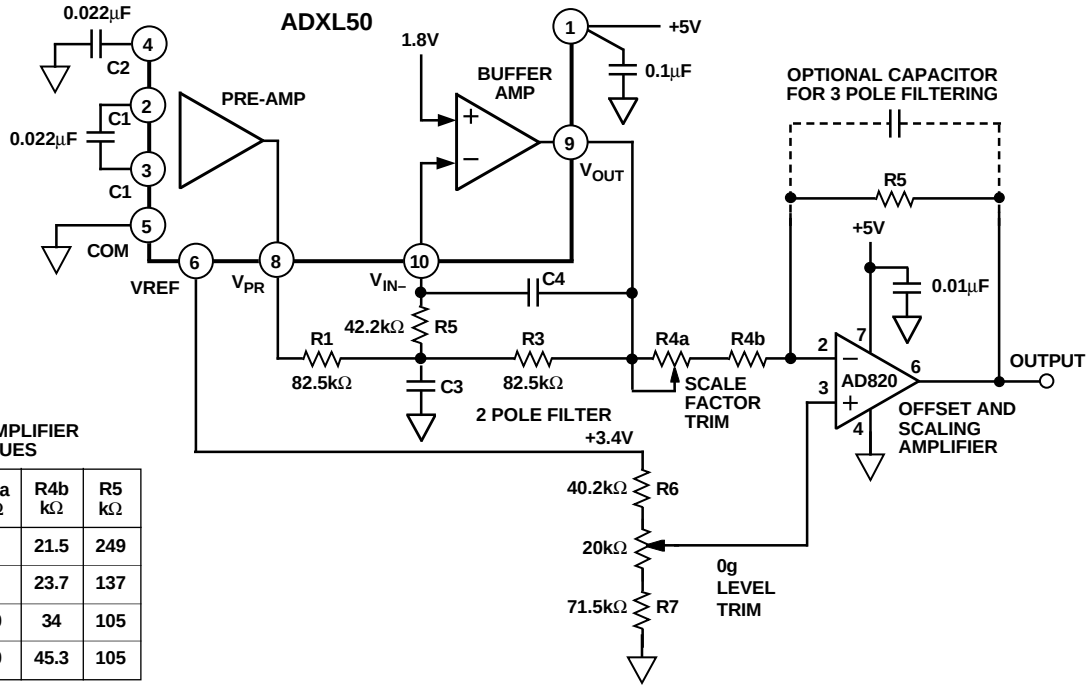

Figure 24. Circuit Providing Two Pole Post Filtering and 0 g Offset and Scale Factor Trimming

Capacitors C3 and C4 are chosen to provide the desired 3 dB bandwidth. Component values are specified for bandwidths of 10 Hz, 30 Hz, 100 Hz, and 300 Hz. For other 3 dB bandwidths simply scale the capacitor values; i.e., for a 3 dB bandwidth of 20 Hz, divide the 10 Hz bandwidth numbers by 2.0. The nominal buffer amplifier output will be +1.8 V ± 19 mV/g. Note that the ADXL50's self-test will be fully functional since the buffer amplifier is operated at unity gain and resistor R1 is large. The external op amp offsets and scales the output to provide a +2.5 V ± 2 V output over a wide range of full-scale g levels. The external op amp may be omitted in high g, low gain applications.

NOISE CONSIDERATIONS

The output noise of the ADXL50 scales with the square root of its bandwidth. The noise floor may be reduced by lowering the bandwidth of the ADXL50 either by increasing the value of the demodulator capacitor or by adding an external filter.

The typical rms noise of the ADXL50J with a bandwidth of 100 Hz and a noise density of 125 μV/√Hz is estimated as follows:

$$Noise\ (rms) = (125\ \mu V/\sqrt{Hz})\ \sqrt{100} = 1.25\ mV\ rms$$

Peak-to-peak noise may be estimated with the following equation:

$$Noise\ p\text{-}p = (6.6)\ Noise\ rms$$

Peak-to-peak noise is thus estimated at 8.25 mV or approximately 0.4 g p-p. The ADXL50 noise is characteristic of white noise. Typical rms and p-p noise for various 3 dB bandwidths is estimated in Figure 25.

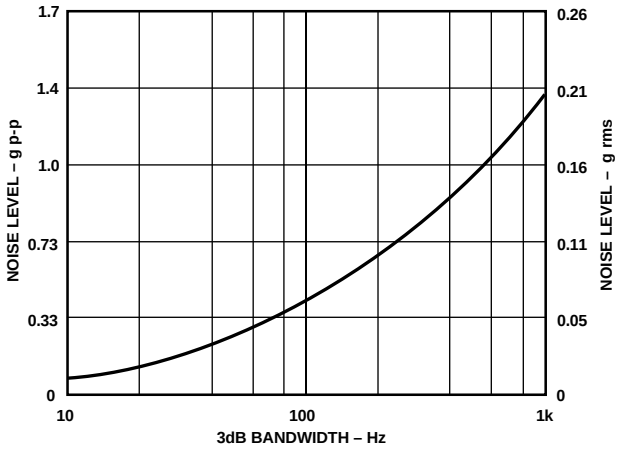

Figure 25. ADXL50 Noise Level and Resolution vs. –3 dB Bandwidth

Because the ADXL50's noise is for all practical purposes Gaussian in amplitude distribution, the highest noise amplitudes have the smallest (yet nonzero) probability. Peak-to-peak noise is, therefore, difficult to measure and can only be estimated due to its statistical nature. Table III is useful for estimating the probabilities of exceeding various peak values, given the rms value.

Table III.

Nominal Peak-to-Peak Value	% of Time that Noise will Exceed Nominal Peak-to-Peak Value
2.0 × rms	32%
3.0 × rms	13%
4.0 × rms	4.6%
5.0 × rms	1.2%
6.0 × rms	0.27%
6.6 × rms	**0.1%**
7.0 × rms	0.046%
8.0 × rms	0.006%

AC COUPLING V_{PR} TO BUFFER INPUT

If a dc response is not required, as in applications such as motion detection or vibration measurement, then ac coupling should be considered. In low g applications, the output voltage change due to acceleration is small compared to the 0 g offset voltage drift. Because ac coupling removes the dc component of the output, the preamp output signal may be amplified considerably without increasing the 0 g level drift. The most effective way to ac couple the ADXL50 is between the preamp output at V_{PR} and the buffer input, V_{IN-}, as shown in Figure 26.

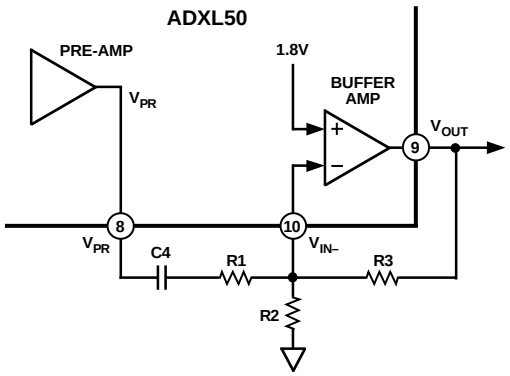

Figure 26. AC Coupling the V_{PR} Output to the Buffer Input

Using this configuration, the system's ac response is now rolled off—at the low frequency end at F_L, and at the high frequency end at F_H. The normalized frequency response of the system can be seen in Figure 27.

The low frequency roll-off, F_L, due to the ac coupling network is:

$$F_L = 1/(2\ \pi\ R1\ C4)$$

The high frequency roll-off F_H is determined by the dominant pole of the system which is controlled by either the demodulator capacitor and its associated time-constant or by a dominant post filter.

As a consequence of ac coupling, any constant acceleration component gravity will not be detected (because this too is a dc voltage present at the V_{PR} output). The self-test feature, if used, must be monitored at V_{PR}, rather than at the buffer output.

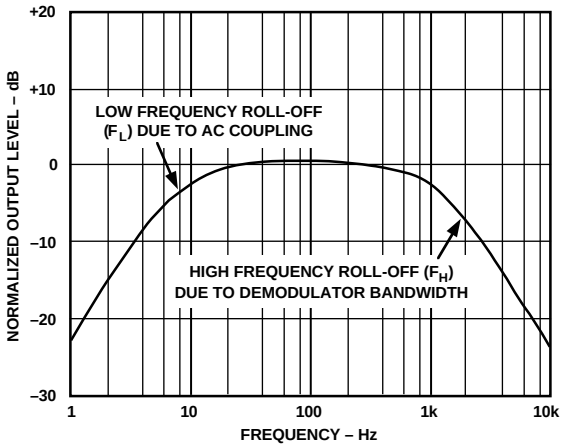

Figure 27. Normalized Output Level vs. Frequency for a Typical Application Using AC Coupling Between V_{PR} and Buffer Amplifier

MINIMIZING EMI/RFI

The architecture of the ADXL50 and its use of synchronous demodulation make the device immune to most electromagnetic (EMI) and radio frequency (RFI) interference. The use of synchronous demodulation allows the circuit to reject all signals except those at the frequency of the oscillator driving the sensor element. However, the ADXL50 does have a sensitivity to RFI that is within ±5 kHz of the internal oscillator's nominal frequency of 1 MHz. The internal oscillator frequency will exhibit part to part variation in the range of 0.6 MHz to 1.4 MHz.

In general the effect is difficult to notice as the interference must match the internal oscillator within ±5 kHz and must be large in amplitude. For example: a 1 MHz interference signal of 20 mV p-p applied to the +5 V power supply pin will produce a 200 mV p-p signal at the V_{PR} pin if the internal oscillator and interference signals are matched exactly. If the same 20 mV interference is applied but 5 kHz above or below the internal oscillator's frequency, the signal level at V_{PR} will only be 20 mV p-p in amplitude.

Power supply decoupling, short component leads (especially for capacitors C1 and C2), physically small (surface mount, etc.) components and attention to good grounding practices all help to prevent RFI and EMI problems. Please consult the factory for applications assistance in instances where this may be of concern.

SELF-CALIBRATING THE ADXL50

If a calibrated shaker is not available, both the 0 g level and scale factor of the ADXL50 may be easily set to fair accuracy by using a self-calibration technique based on the 1 g (average) acceleration of the earth's gravity. Figure 28 shows how gravity and package orientation affect the ADXL50's output (TO-100 package shown). Note that the output polarity is that which appears at V_{PR}; the output at V_{OUT} will have the opposite sign. With its axis of sensitivity in the vertical plane, the ADXL50 should register a 1 g acceleration, either positive or negative, depending on orientation. With the axis of sensitivity in the horizontal plane, no acceleration (0 g) should be indicated.

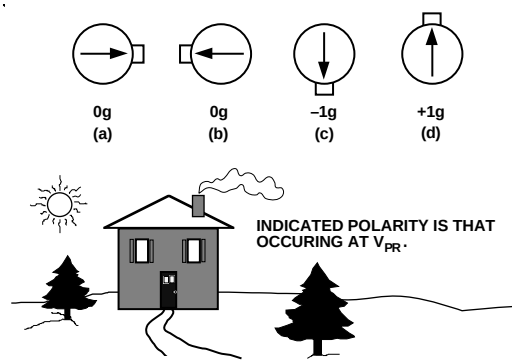

Figure 28. Using the Earth's Gravity to Self-Calibrate the ADXL50

To self-calibrate the ADXL50, place the accelerometer on its side with its axis of sensitivity oriented as shown in "a." The 0 g offset potentiometer, Rt, is then roughly adjusted for midscale: +2.5 V at the buffer output. If the optional scale factor trimming is to be used, it should be adjusted next.

Next, the package axis should be oriented as in "c" (pointing down) and the output reading noted. The package axis should then be rotated 180° to position "d" and the scale factor potentiometer, R1a, adjusted so that the output voltage indicates a change of 2 g's in acceleration. For example, if the circuit scale factor at the buffer output is 100 mV per g, then the scale factor trim should be adjusted so that an output change of 200 mV is indicated.

Adjusting the circuit's scale factor will have some effect on its 0 g level so this should be readjusted, as before, but this time checked in both positions "a" and "b." If there is a difference in the 0 g reading, a compromise setting should be selected so that the reading in each direction is equidistant from +2.5 V. Scale factor and 0 g offset adjustments should be repeated until both are correct. Temporarily placing a capacitor across the buffer amplifier's feedback resistor will reduce output noise and so aid in trimming the device. Note that, for high full-scale g ranges, ±2 g may be a very small fraction of the full-scale range and device nonlinearity will, therefore, affect the circuit's high g level accuracy.

Compensating for the 0 g Drift of the ADXL50 Accelerometer

The circuit of Figure 29 provides a linear temperature compensation for the ADXL50. Figure 30 shows the 0 g drift over temperature for a typical ADXL50 with and without this circuit. As shown by Figure 30, the linear portion of the drift curve has been subtracted out. In effect, the curve has been rotated counterclockwise until it is horizontal, leaving just the bow of the curve: that portion which is not linear. As shown by Figure 30, over a +25°C to +70°C range, a 10× reduction in drift is achieved.

The circuit of Figure 29 is essentially a temperature sensor coupled to a Whetstone bridge. The AD590 provides a 1 µA/°K current output whose voltage scale factor is set by resistor RA. The bridge circuit subtracts out the nominal 298 mV output of the AD590 at +25°C and leaves only the change in temperature, which is what is needed. Without the bridge, the 298 mV room temperature "offset" would "swamp" the much smaller change in output with temperature.

Resistors R5 and R6 form a resistor divider (one half of the bridge) which divides down the +3.4 V reference output of the ADXL50 to 0.3 V which appears at the noninverting input of the AD820 op amp. Resistors R7 and R8 form the other half of the bridge, and because they have the same ratio as R5 and R6, the op amp will have a +3.4 V output at room temperature.

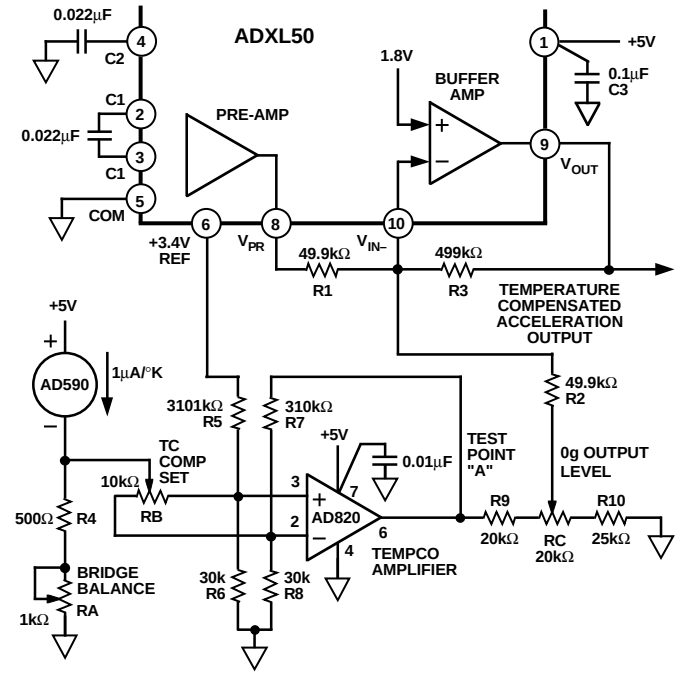

CALIBRATION PROCEEDURE:
AT T_{MIN} OR LOWER TEMP CAL POINT...

1. SET RB ALL THE WAY TO ONE SIDE.
2. ADJUST RA FOR +3.4V AT TEST POINT "A."
3. SET RC FOR +2.5V V_{OUT} (AT PIN 9 OF ADXL50).
4. TEMPORARILY CONNECT A 1.5kΩ RESISTOR BETWEEN THE CENTER OF RB AND GROUND.
5. ADJUST RB FOR +2.5V AT V_{OUT}.
6. REMOVE THE 1.5kΩ RESISTOR. V_{OUT} SHOULD NOT CHANGE.
7. GO TO T_{MAX} OR HIGH TEMP CAL POINT.
8. READJUST RB FOR +2.5V.
9. CALIBRATION COMPLETE.

Figure 29. ADXL50 0 g Drift Compensation Circuit

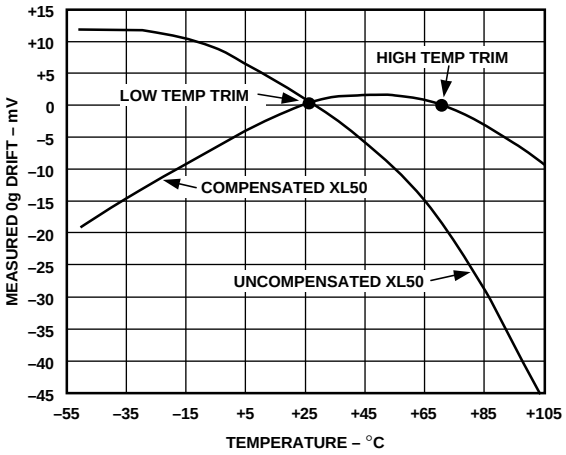

Figure 30. ADXL50 0 g Drift With and Without the Compensation Circuit of Figure 29

ADXL50 Application Literature Available

Contact the Analog Devices Literature Center for a copy of publication number G2112, the Accelerometer Application Guide. This includes all current application notes and data sheets for Analog Devices' accelerometers.

OUTLINE DIMENSIONS

Dimensions shown in inches and (mm).

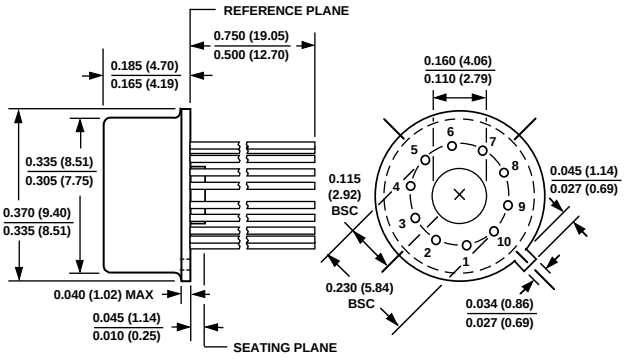

C1808b–5–3/96

PRINTED IN U.S.A.