NatureVue™ Video Signal Processor with Bitmap OSD, Dual HDMI Tx, and Encoder

Data Sheet **ADV8003**

FEATURES

- Video signal processor
  - Full 12-bit, 4:4:4 YUV internal processing
  - Motion adaptive de-interlacing with ultralow angle interpolation
  - Multiple video processing paths
  - Upscaling to 4k × 2k (ADV8003KBCZ-8x models only)
  - Aspect ratio conversion/panorama scaling
  - Cadence detection for the recovery of original frames from film-based content
  - Dual video scalers enable simultaneous output of multiple different resolutions
  - Sharpness and detail enhancement
  - Noise reduction to reduce random, mosquito, and block noise
  - Frame rate converter
  - Support for up to 3 simultaneous video streams, including picture-in-picture (PiP) support
- On-screen display (OSD)
  - Internally generated bitmap-based OSD allowing overlay on one or more video outputs
  - Overlay on 3D video formats
  - Dedicated OSD scaler
  - Alpha blending of OSD data on video data
  - Disturbance free blending of OSD on either of 2 zones
  - Option of external OSD
  - Easy to use software tool for developing OSDs
- HDMI transmitters
  - Dual HDMI transmitters enabling splitter capability
  - Content type bits
  - CEC 1.4 controller
  - Audio return channel (ARC) support
  - Support of standard S/PDIF for stereo LPCM compressed audio up to 192 kHz
  - 6-channel uncompressed LPCM I²S audio up to 192 kHz
  - 6-channel direct stream digital (DSD) audio inputs
- Noise shaped video (NSV) six-DAC video encoder
  - Six 12-bit NSV video DACs
  - Multiformat video output support
    - Composite (CVBS), S-Video (Y/C), and Component YPrPb (SD, ED, and HD)
  - Rovi Rev. 7.1.L1 (SD) and Rev. 1.4 (ED) compliant
  - Simultaneous SD and ED/HD operation
- Professional video mode
  - Capability to output up to 36-bit TTL data

APPLICATIONS

- High-end A/V receivers
- Upconverting DVD players/recorders
- Blu-ray players/recorders
- Set-top boxes
- Video conferencing
- Standalone video processors
- HDMI splitters

FUNCTIONAL BLOCK DIAGRAM

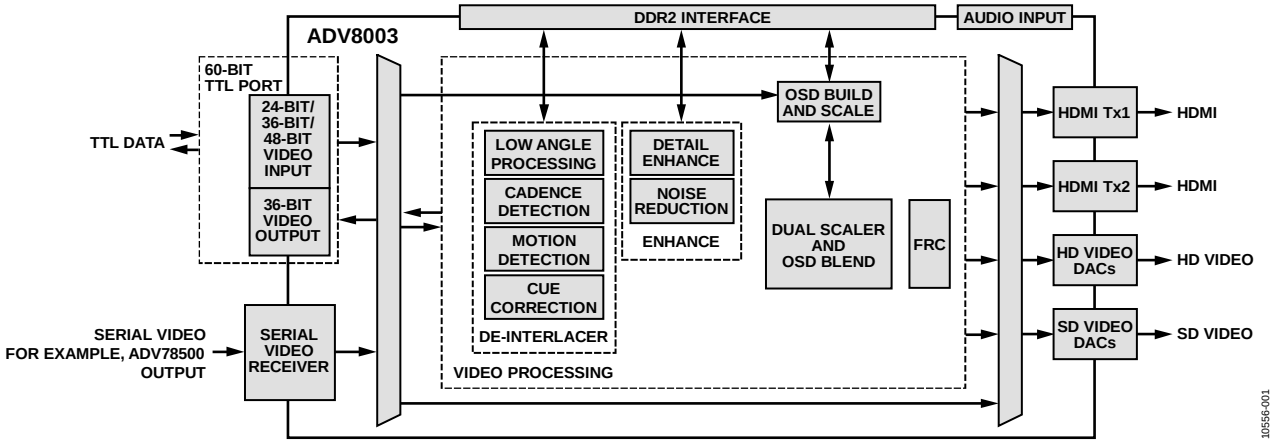

Figure 1.

Advantiv® Advanced Television Solutions by Analog Devices | NatureVue™ Video Upconversion and Enhancement by Analog Devices

Rev. B Document Feedback

Information furnished by Analog Devices is believed to be accurate and reliable. However, no responsibility is assumed by Analog Devices for its use, nor for any infringements of patents or other rights of third parties that may result from its use. Specifications subject to change without notice. No license is granted by implication or otherwise under any patent or patent rights of Analog Devices. Trademarks and registered trademarks are the property of their respective owners.

One Technology Way, P.O. Box 9106, Norwood, MA 02062-9106, U.S.A.
Tel: 781.329.4700 ©2012–2013 Analog Devices, Inc. All rights reserved.
Technical Support www.analog.com

TABLE OF CONTENTS

Features ... 1
Applications ... 1
Functional Block Diagram ... 1
Revision History ... 2
General Description ... 3
The ADV8003 Family ... 3
Detailed Functional Block Diagram ... 5
Specifications ... 6
Electrical Characteristics ... 6
Analog Specifications ... 7
Data and I²C Timing Characteristics ... 8
Absolute Maximum Ratings ... 18
ESD Caution ... 18
Pin Configuration and Function Descriptions ... 19
Design Considerations ... 59
Power-Up Sequence ... 59
Thermal Considerations ... 59
Functional Overview ... 60
Video Input ... 60
Flexible Digital Core ... 60
Video Signal Processor (VSP) ... 60
On-Screen Display (OSD) ... 61
External DDR2 Memory ... 61
HDMI Transmitters ... 61
Video Encoder ... 61
Professional Configuration ... 61
Register Map Architecture ... 62
Typical Applications Diagram ... 63
Outline Dimensions ... 64
Ordering Guide ... 64

REVISION HISTORY

8/13—Revision B: Initial Version

GENERAL DESCRIPTION

The ADV8003 is a multiple input video signal processor that can de-interlace and scale SD, ED, or HD video data to HD formats; generate a bitmap on-screen display (OSD); and output the video with OSD overlaid on two High Definition Multimedia Interface (HDMI®) transmitters and a video encoder.

Video can be input into the ADV8003 in a number of ways: using the 48-bit TTL pixel port, using the 24-bit external OSD TTL pixel port, or from a device with an HDMI transmitter such as the ADV7850. The ADV8003 supports many of the formats outlined in the CEA-861 and VESA specifications, as well as several other widely used timing formats.

Using two external DDR2 memories, the ADV8003 can perform high performance, motion adaptive interlaced to progressive conversion on SD and HD content. Using a single DDR2 memory, the HD de-interlacing is limited to intrafield.

The ADV8003 features primary and secondary video scalers that enable simultaneous output of multiple different resolutions. The primary video scaler of the ADV8003KBCZ-8/8B/8C models is capable of upscaling to 4k × 2k format and downscaling from 1080p. The primary video scaler of the ADV8003KBCZ-7/ ADV8003KBCZ-7B/ADV8003KBCZ-7C/ADV8003KBCZ-7T models is capable of upscaling and downscaling to and from a 1080p format. The secondary video scaler facilitates up-scaling to 1080p and downscaling to 480p. Detail enhancement and image enhancing techniques such as random, mosquito, and block noise reduction allow for improved final image quality. The frame rate converter of the ADV8003 allows the conversion between common frame rates with support to output two different frame rates simultaneously under certain conditions.

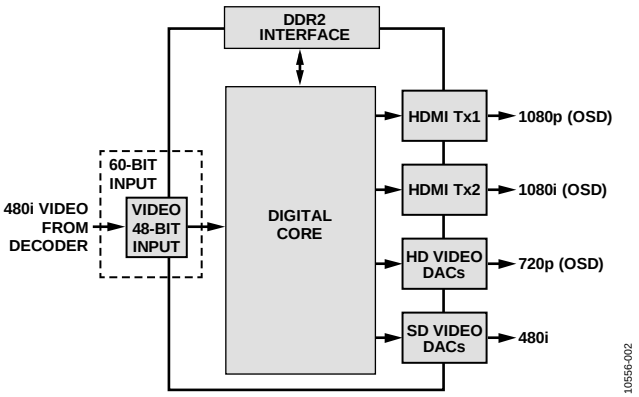

Figure 2. Sample Multiple Output Configuration

The ADV8003 has a flexible digital core that allows the user to configure the part in several different modes; for example, using a single video processing channel, using dual video processing channels, or displaying OSD on multiple outputs of different resolutions.

The ADV8003 can accept OSD information from an external OSD source on the 24-bit external OSD TTL pixel data input or can internally generate a high quality, bitmap-based OSD. The internal OSD is highly flexible and allows the system designer to easily incorporate features like scrolling text and animation in various color depths up to 24-bit true color.

Analog Devices, Inc., provides an OSD development tool (Blimp) to assist in the design, debug, and emulation of the OSD prior to integration with the system application. When the design is complete, the OSD development tool automatically generates code to which system APIs can be added before integration with the system application and an OSD design resource, which must be downloaded to an external SPI flash memory.

Video can be output from the ADV8003 using one or both of the HDMI transmitters and/or the 6-DAC SD/HD video encoder. The flexible multiplexing allows simultaneous output on the HDMI transmitters and HD formats on the HD DACs (for example, 1080p) with SD formats on the SD DACs (for example, 480i).

Both of the HDMI transmitters on the ADV8003 support all mandatory and many optional 3D video resolutions and audio return channels (ARC). Each transmitter also features a full CEC master. The ADV8003 can receive up to six channels of I²S, S/PDIF, direct stream digital (DSD), and high bit rate (HBR).

The six 12-bit NSV® video DACs allow for composite (CVBS), S-Video (Y/C), and component (YPrPb) analog outputs in standard, enhanced, and high definition video formats. Over-sampling of 216 MHz (SD and ED) and 297 MHz (HD) removes the requirement for external output filtering.

The ADV8003 can also support 30-bit TTL in mode and 30-bit TTL out mode for professional applications, which do not require the use of HDMI.

The ADV8003 supports the I²C protocol for communication with the system microcontroller.

THE ADV8003 FAMILY

There are a number of derivatives within the ADV8003 family, each featuring different capabilities; all are provided in the same 19 mm × 19 mm, 425-ball CSP_BGA package (see Table 1).

Note that the functionality of the ADV8003KBCZ-8 is described throughout this data sheet. Some sections are not relevant to other models because not all of the blocks found in the ADV8003KBCZ-8 are included in those models. Table 1 lists the functionality for each model.

Table 1. Features Sets of the ADV8003 Family ICs

Part Number	Maximum Data Rate	Maximum Video Format	HDMI TX Outputs	Analog Outputs	Rovi Output	VSP	OSD	TTL Out
ADV8003KBCZ-8[1]	3 Gbps	4k × 2k at 30 Hz (8-bit)	2	Six 12-bit DACs	Yes	Yes	Yes	Yes
ADV8003KBCZ-8B	3 Gbps	4k × 2k at 30 Hz (8-bit)	1	No	No	Yes	Yes	No
ADV8003KBCZ-8C	3 Gbps	4k × 2k at 30 Hz (8-bit)	2	No	No	Yes	Yes	No
ADV8003KBCZ-7[1]	2.25 Gbps	UXGA (162 MHz)	2	Six 12-bit DACs	Yes	Yes	Yes	Yes
ADV8003KBCZ-7B	2.25 Gbps	UXGA (162 MHz)	1	No	No	Yes	Yes	No
ADV8003KBCZ-7C	2.25 Gbps	UXGA (162 MHz)	2	No	No	Yes	Yes	No
ADV8003KBCZ-7T	2.25 Gbps	UXGA (162 MHz)	0	No	No	Yes	Yes	Yes

[1] Rovi enabled ICs require the buyer to be an approved licensee (authorized buyer) of ICs that are capable of outputting Rovi compliant video.

DETAILED FUNCTIONAL BLOCK DIAGRAM

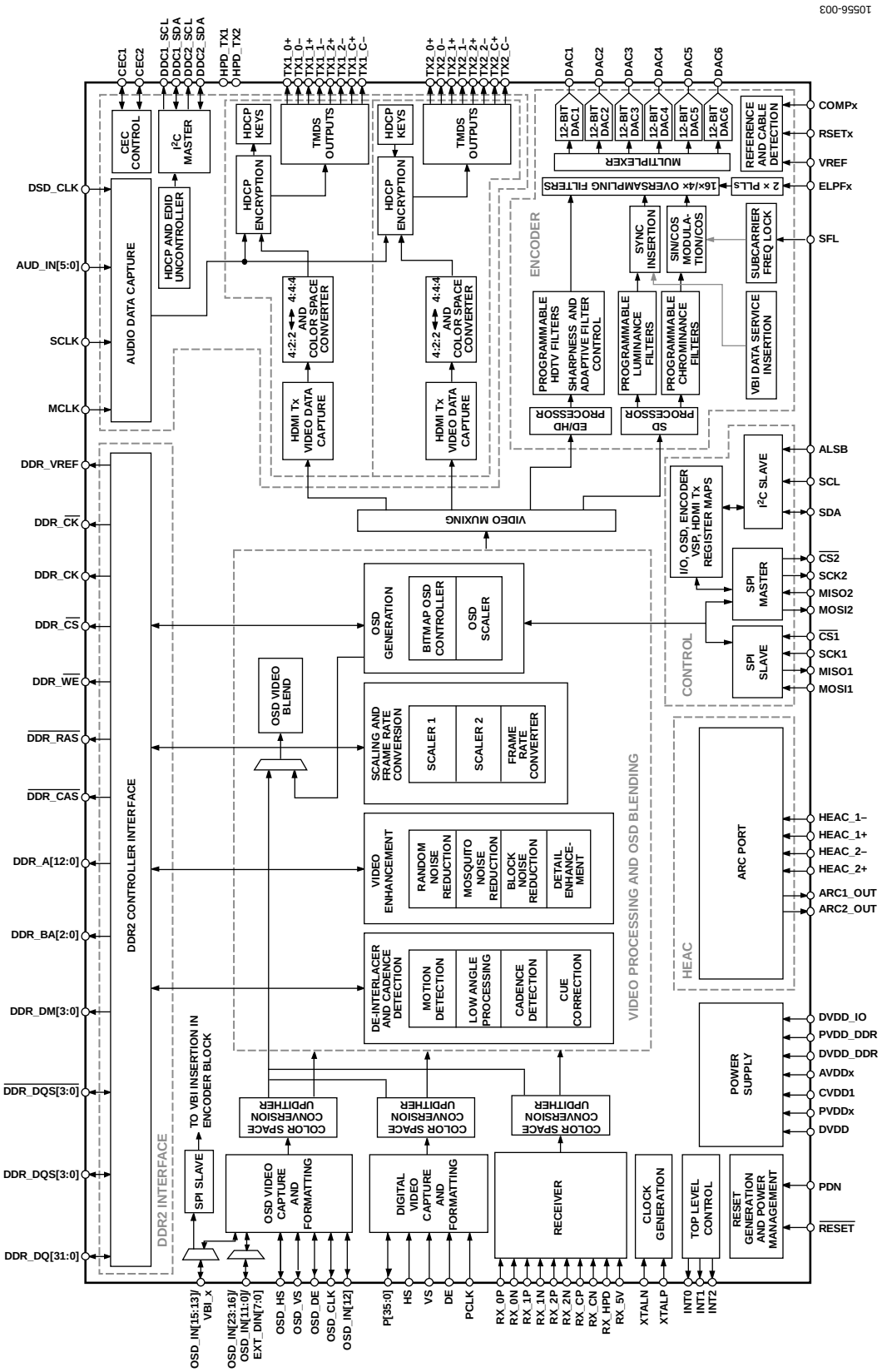

Figure 3. ADV8003KBCZ-8

SPECIFICATIONS

Measured at DVDD = 1.746 V to 1.854 V, DVDD_DDR = 1.746 V to 1.854 V, PVDD1 = 1.746 V to 1.854 V, PVDD2 = 1.746 V to 1.854 V, PVDD3 = 1.746 V to 1.854 V, PVDD5 = 1.746 V to 1.854 V, PVDD6 = 1.746 V to 1.854 V, PVDD_DDR = 1.746 V to 1.854 V, AVDD3 = 1.746 V to 1.854 V, CVDD1 = 1.746 V to 1.854 V, AVDD1 = 3.20 V to 3.40 V, AVDD2 = 3.20 V to 3.40 V, DVDD_IO = 3.20 V to 3.40 V, T_{MIN} to T_{MAX} = 0°C to 70°C, unless otherwise noted.

ELECTRICAL CHARACTERISTICS

Table 2.

Parameter	Symbol	Test Conditions/Comments	Min	Typ	Max	Unit
STATIC PERFORMANCE						
Resolution (Each DAC)	N			12		Bits
Integral Nonlinearity, +ve[1]	INL	DAC outputs sampled at 500 kHz		0.389		LSB
Integral Nonlinearity, −ve[1]	INL	DAC outputs sampled at 500 kHz		−0.322		LSB
Differential Nonlinearity, +ve[2]	DNL	DAC outputs sampled at 500 kHz		0.183		LSB
Differential Nonlinearity, −ve[2]	DNL	DAC outputs sampled at 500 kHz		−0.208		LSB
DIGITAL INPUTS						
Input High Voltage	V_{IH}		0.7 × DVDD_IO			V
Input Low Voltage	V_{IL}				0.3 × DVDD_IO	V
Input Leakage Current	I_{IN}	HEAC inputs			±60	µA
		DDR_DQS inputs			±60	µA
		Other digital inputs			±10	µA
Input Capacitance	C_{IN}			13		pF
DIGITAL INPUTS (5 V TOLERANT)						
Input High Voltage	V_{IH}		3.4			V
Input Low Voltage	V_{IL}				0.8	V
Input Leakage Current	I_{IN}				±60	µA
DIGITAL OUTPUTS						
Output High Voltage	V_{OH}		2.4			V
Output Low Voltage	V_{OL}				0.4	V
High Impedance Leakage Current	I_{LEAK}				±10	µA
Output Capacitance	C_{OUT}			13		pF
POWER REQUIREMENTS[3, 4, 5]						
Digital Power Supply	DVDD		1.746	1.8	1.854	V
PLL Analog Supply	PVDD1		1.746	1.8	1.854	V
PLL Digital Supply	PVDD2		1.746	1.8	1.854	V
Encoder PLL Supply	PVDD3		1.746	1.8	1.854	V
HDMI Tx1 PLL Power Supply	PVDD5		1.746	1.8	1.854	V
HDMI Tx2 PLL Power Supply	PVDD6		1.746	1.8	1.854	V
HDMI Analog Power Supply	AVDD3		1.746	1.8	1.854	V
Comparator Power Supply	CVDD1		1.746	1.8	1.854	V
HDMI Rx Inputs Analog Supply	AVDD1		3.20	3.3	3.40	V
Encoder Analog Power Supply	AVDD2		3.20	3.3	3.40	V
Digital Interface Supply	DVDD_IO		3.20	3.3	3.40	V
Digital Power Supply Current, Including DVDD_DDR and PVDD_DDR	I_{DVDD}	Mode 1		1989.0		mA
		Mode 2		1423.0		mA
		Power-down mode		60.6		mA
PLL Analog Supply Current	I_{PVDD1}	Mode 1		23.0		mA
		Mode 2		21.0		mA
		Power-down mode		1.3		mA
PLL Digital Supply Current	I_{PVDD2}	Mode 1		21.8		mA
		Mode 2		19.9		mA
		Power-down mode		0.2		mA

Parameter	Symbol	Test Conditions/Comments	Min	Typ	Max	Unit
Encoder PLL Supply Current	I_{PVDD3}	Mode 1		8.9		mA
		Mode 2		3.8		mA
		Power-down mode		0.0		mA
HDMI Tx1 PLL Supply Current	I_{PVDD5}	Mode 1		62.2		mA
		Mode 2		49.3		mA
		Power-down mode		1.8		mA
HDMI Tx2 PLL Supply Current	I_{PVDD6}	Mode 1		62.5		mA
		Mode 2		2.1		mA
		Power-down mode		1.6		mA
HDMI Analog Power Supply Current	I_{AVDD3}	Mode 1		52.9		mA
		Mode 2		19.7		mA
		Power-down mode		3.6		mA
Comparator Power Supply Current	I_{CVDD1}	Mode 1		76.1		mA
		Mode 2		69.6		mA
		Power-down mode		1.1		mA
HDMI Rx Inputs Analog Supply Current	I_{AVDD1}	Mode 1		62.3		mA
		Mode 2		56.8		mA
		Power-down mode		6.3		mA
Encoder Analog Power Supply	I_{AVDD2}	Mode 1		36.2		mA
		Mode 2		9.2		mA
		Power-down mode		1.9		mA
Digital Interface Supply Current	I_{DVDD_IO}	Mode 1		1.14		mA
		Mode 2		1.93		mA
		Power-down mode		0.1		mA

[1] Integral nonlinearity (INL) measures the deviation of the actual DAC transfer function from the ideal. For +ve INL, the actual line lies above the ideal line value. For −ve INL, the actual line lies below the ideal line value.
[2] Differential nonlinearity (DNL) measures the deviation of the actual DAC output voltage step from the ideal. For +ve DNL, the actual step value lies above the ideal step value. For −ve DNL, the actual step value lies below the ideal step value.
[3] Mode 1 involves a 1080i60 input to the ADV8003 receiver and a 720p60 input to the ADV8003 TTL external OSD input. Both inputs are run through the front-end color space converters. The 1080i60 video stream is de-interlaced and upscaled to 4k × 2k at 24 Hz. The 720p video stream is input to the OSD block and is blended onto the 4k × 2k at 24 Hz video stream using the OSD block scaler. Both HDMI transmitters are then driven using the 4k × 2k at 24 Hz output.
[4] Mode 2 involves a 1080i60 input to the ADV8003 receiver. This input is run through the front-end color space converter. The 1080i60 video stream is de-interlaced and is output to HDMI Transmitter 1. The secondary VSP is used to convert the 1080p video stream to 480i and is output using the SD encoder.
[5] In the power-down mode, the ARC and the internal clock tree are kept active.

ANALOG SPECIFICATIONS

Table 3.

Parameter	Test Conditions/Comments	Min	Typ	Max	Unit
Low Drive Output Current (Full Scale)	R_{SET} = 4.12 kΩ, R_L = 300 Ω	3.95	4.3	4.5	mA
DAC-to-DAC Matching	DAC1 to DAC6		0.9		%
Output Compliance, V_{OC}		0		1.4	V
Output Capacitance, C_{OUT}	DAC1, DAC2, DAC3		9		pF
	DAC4, DAC5, DAC6		9		pF
DAC Analog Output Skew	DAC1 to DAC6		0.2		ns

DATA AND I²C TIMING CHARACTERISTICS

For input timing measurements, V_{IH} = DVDD_IO and V_{IL} = GND.

Table 4.

Parameter	Symbol	Test Conditions/Comments	Min	Typ	Max	Unit
TMDS CLOCK						
TMDS Input Clock Frequency		ADV8003KBCZ-8, ADV8003KBCZ-8B, ADV8003KBCZ-8C	25		297	MHz
		ADV8003KBCZ-7, ADV8003KBCZ-7B, ADV8003KBCZ-7C, ADV8003KBCZ-7T	25		225	MHz
TMDS Output Clock Frequency		ADV8003KBCZ-8, ADV8003KBCZ-8B, ADV8003KBCZ-8C	25		297	MHz
		ADV8003KBCZ-7, ADV8003KBCZ-7B, ADV8003KBCZ-7C, ADV8003KBCZ-7T	25		225	MHz
CLOCK AND CRYSTAL						
Crystal Frequency, XTAL				27		MHz
Crystal Frequency Stability					±50	ppm
Primary Video Input Clock Frequency Range			13.5		162	MHz
Secondary Video Input Clock Frequency Range			13.5		162	MHz
Video Output Clock Frequency Range			13.5		162	MHz
Serial Port 1 SCK Frequency (SCK1)					50	MHz
Serial Port 2 SCK Frequency (SCK2)			11.5		81	MHz
Serial Port 3 SCK Frequency (VBI_SCK)					27	MHz
Audio SCLK Frequency					49.152	MHz
Audio MCLK Frequency					98.304	MHz
Audio DSD Clock Frequency					5.6448	MHz
FAST I²C PORTS[1]						
SCL Frequency					400	kHz
SCL Minimum Pulse Width High	t_1		600			ns
SCL Minimum Pulse Width Low	t_2		1.3			µs
Start Condition Hold Time	t_3		600			ns
Start Condition Setup Time	t_4		600			ns
SDA Setup Time	t_5		100			ns
SCL and SDA Rise Time	t_6				300	ns
SCL and SDA Fall Time	t_7				300	ns
Stop Condition Setup Time	t_8		0.6			µs
SERIAL PORT[2, 3]						
Master Serial Port (Serial Port 2)						
$\overline{CS2}$ Falling Edge to SCK2 Rising/Falling Edge	t_9, t_{10}	t_9, t_{10}, depending on the values of CPHA and CPOL	1 × SCK2 periods		1.5 × SCLK2 periods	ns
SCK2 Rising/Falling Edge to $\overline{CS2}$ Rising Edge	t_{11}, t_{12}	t_{11}, t_{12}, depending on the values of CPHA and CPOL	1 × SCK2 periods		1.5 × SCLK2 periods	ns
$\overline{CS2}$ Pulse Width	t_{13}		1880		1900	ns
SCK2 High Time	t_{14}		0.45 × SCLK2 periods		0.55 × SCLK2 periods	% duty cycle
SCK2 Low Time			0.45 × SCLK2 periods		0.55 × SCLK2 periods	% duty cycle

Parameter	Symbol	Test Conditions/Comments	Min	Typ	Max	Unit
MOSI2 Start of Data Invalid to SCK2 Falling Edge	t_{15}	SPI Mode 0, SPI Mode 3			1.15	ns
$\overline{CS2}$ Start of Data Invalid to SCK2 Falling Edge	t_{15}	SPI Mode 0, SPI Mode 3			0.81	ns
SCK2 Falling Edge to MOSI2 End of Data Invalid	t_{16}	SPI Mode 0, SPI Mode 3			1.85	ns
SCK2 Falling Edge to $\overline{CS2}$ End of Data Invalid	t_{16}	SPI Mode 0, SPI Mode 3			2.14	ns
MISO2 Setup Time	t_{17}	Valid regardless of the SCK2 active edge used	14.57			ns
MISO2 Hold Time	t_{18}	Valid regardless of the SCK2 active edge used	0.0			ns
MOSI2 Start of Data Invalid to SCK2 Rising Edge	t_{19}	SPI Mode 1, SPI Mode 2			1.59	ns
$\overline{CS2}$ Start of Data Invalid to SCK2 Rising Edge	t_{19}	SPI Mode 1, SPI Mode 2			1.24	ns
SCK2 Rising Edge to MOSI2 End of Data Invalid	t_{20}	SPI Mode 1, SPI Mode 2			1.39	ns
SCK2 Rising Edge to $\overline{CS2}$ End of Data Invalid	t_{20}	SPI Mode 1, SPI Mode 2			1.68	ns
MISO2 Setup Time	t_{21}	Valid regardless of the SCK2 active edge used	14.57			ns
MISO2 Hold Time	t_{22}	Valid regardless of the SCK2 active edge used	0.0			ns
Slave Mode (Serial Port 1)						
$\overline{CS1}$ Falling Edge to SCK1 Rising/Falling Edge	t_{23}, t_{24}	t_{23}, t_{24}, depending on the values of CPHA and CPOL			50.0	ns
SCK1 Rising/Falling Edge to $\overline{CS1}$ Rising Edge	t_{25}, t_{26}	t_{25}, t_{26}, depending on the values of CPHA and CPOL			50.0	ns
$\overline{CS1}$ Pulse Width	t_{27}			5 × SCK1 periods		ns
SCK1 High Time	t_{30}		0.45 × SCK1 periods		0.55 × SCK1 periods	% duty cycle
SCK1 Low Time			0.45 × SCK1 periods		0.55 × SCK1 periods	% duty cycle
MOSI1 Setup Time	t_{31}	SPI Mode 0, SPI Mode 3	0.15			ns
MOSI1 Hold Time	t_{32}	SPI Mode 0, SPI Mode 3	1.4			ns
SCK1 Falling Edge to MISO1 Start of Data Invalid	t_{33}	SPI Mode 0, SPI Mode 3			5.89	ns
SCK1 Falling Edge to MISO1 End of Data Invalid	t_{34}	SPI Mode 0, SPI Mode 3			12.08	ns
MOSI1 Setup Time	t_{35}	SPI Mode 1, SPI Mode 2	0			ns
MOSI1 Hold Time	t_{36}	SPI Mode 1, SPI Mode 2	1.96			ns
SCK1 Rising Edge to MISO1 Start of Data Invalid	t_{37}	SPI Mode 1, SPI Mode 2			5.79	ns
SCK1 Rising Edge to MISO1 End of Data Invalid	t_{38}	SPI Mode 1, SPI Mode 2			11.97	ns
Slave Mode (Serial Port 3)						
VBI_SCK High Time	t_{39}		0.45 × VBI_SCK periods		0.55 × VBI_SCK periods	% duty cycle
VBI_SCK Low Time			0.45 × VBI_SCK periods		0.55 × VBI_SCK periods	% duty cycle
VBI_$\overline{CS}$ Pulse Width				5 × VBI_SCK periods		ns
VBI_$\overline{CS}$, VBI_MOSI Setup Time	t_{40}	SPI Mode 0 only	0.93			ns
VBI_$\overline{CS}$, VBI_MOSI Hold Time	t_{41}	SPI Mode 0 only	0.75			ns

Parameter	Symbol	Test Conditions/Comments	Min	Typ	Max	Unit
SPI Pass-Through Mode						
Data Transition on SCK1 to Start of Data Invalid on SCK2	t_{42}				5.17	ns
Data Transition on SCK1 to End of Data Invalid on SCK2	t_{43}				10.20	ns
Data Transition on MOSI1 to Start of Data Invalid on MOSI2	t_{42}				4.90	ns
Data Transition on MOSI1 to End of Data Invalid on MOSI2	t_{43}				10.85	ns
Data Transition on MISO2 to Start of Data Invalid on MISO1	t_{42}				5.29	ns
Data Transition on MISO2 to End of Data Invalid on MISO1	t_{43}				11.97	ns
Data Transition on $\overline{CS1}$ to Start of Data Invalid on $\overline{CS2}$	t_{42}				4.61	ns
Data Transition on $\overline{CS1}$ to End of Data Invalid on $\overline{CS2}$	t_{43}				8.78	ns
RESET FUNCTION						
Reset Pulse Width			5			ms
VIDEO DATA AND CONTROL INPUTS[3]						
PCLK High Time	t_{44}		0.45 × PCLK period		0.55 × PCLK period	% duty cycle
PCLK Low Time			0.45 × PCLK period		0.55 × PCLK period	% duty cycle
OSD_CLK High Time	t_{51}		0.45 × OSD_CLK period		0.55 × OSD_CLK period	% duty cycle
OSD_CLK Low Time			0.45 × OSD_CLK period		0.55 × OSD_CLK period	% duty cycle
Main Video Input, SDR and DDR Mode Setup Time (Data Latched on Rising Edge)	t_{45}		1.42			ns
Main Video Input, SDR and DDR Modes Hold Time (Data Latched on Rising Edge)	t_{46}		0.95			ns
Main Video Input, DDR Mode Setup Time (Data Latched on Falling Edge)	t_{47}		0.72			ns
Main Video Input, DDR Mode Hold Time (Data Latched on Falling Edge)	t_{48}		1.49			ns
Interleaved Video Input, SDR Setup Time (Data Latched on Rising Edge)	t_{49}	Used for 300 MHz TTL data	1.42			ns
Interleaved Video Input, SDR Hold Time (Data Latched on Rising Edge)	t_{50}	Used for 300 MHz TTL data	0.95			ns
External OSD Input, SDR and DDR Mode Setup Time (Data Latched on Rising Edge)	t_{52}		1.33			ns
External OSD Input, SDR and DDR Mode Hold Time (Data Latched on Rising Edge)	t_{53}		0.94			ns
External OSD Input, DDR Mode Setup Time (Data Latched on Rising Edge)	t_{54}		0.57			ns
External OSD Input, DDR Mode Hold Time (Data Latched on Rising Edge)	t_{55}		1.51			ns

Parameter	Symbol	Test Conditions/Comments	Min	Typ	Max	Unit
VIDEO DATA AND CONTROL OUTPUTS[3]						
OSD_CLK High Time	t_{56}		0.40 × OSD_CLK period		0.60 × OSD_CLK period	% duty cycle
OSD_CLK Low Time			0.40 × OSD_CLK period		0.60 × OSD_CLK period	% duty cycle
OSD_CLK Active Edge to Data and Control Start of Data Invalid (Data Latched on Falling Edge)	t_{57}				0.07	ns
OSD_CLK Active Edge to Data and Control End of Data Invalid (Data Latched on Falling Edge)	t_{58}				1.56	ns
OSD_CLK Active Edge to Data and Control Start of Data Invalid (Data Latched on Rising Edge)	t_{59}				0.41	ns
OSD_CLK Active Edge to Data and Control End of Data Invalid (Data Latched on Rising Edge)	t_{60}				0.93	ns
S/PDIF INPUT[3]						
MCLK High Time	t_{61}		0.45 × MCLK periods		0.55 × MCLK periods	% duty cycle
MCLK Low Time			0.45 × MCLK periods		0.55 × MCLK periods	% duty cycle
S/PDIF Data Setup Time	t_{62}		0.12			ns
S/PDIF Data Hold Time	t_{63}		1.89			ns
I²S PORT, SLAVE MODE[3]						
SCLK High Time	t_{64}		0.45 × SCLK periods		0.55 × SCLK periods	% duty cycle
SCLK Low Time			0.45 × SCLK periods		0.55 × SCLK periods	% duty cycle
I²S Data Setup Time	t_{65}		0.42			ns
I²S Data Hold Time	t_{66}		1.38			ns
DSD PORT[3]						
DSD Clock High Time	t_{67}		0.45 × DSD CLK periods		0.55 × DSDCLK periods	% duty cycle
DSD Clock Low Time			0.45 × SCLK periods		0.55 × SCLK periods	% duty cycle
DSD Data Setup Time	t_{68}		0.48			ns
DSD Data Hold Time	t_{69}		1.79			ns

[1] It is possible to run I²C at faster speeds; however, it has been characterized to run only in fast mode.
[2] All serial port measurements are for the default polarity and phase settings (clock low in idle state and negative edge used).
[3] All measurements are guaranteed by design only.

Timing Diagrams

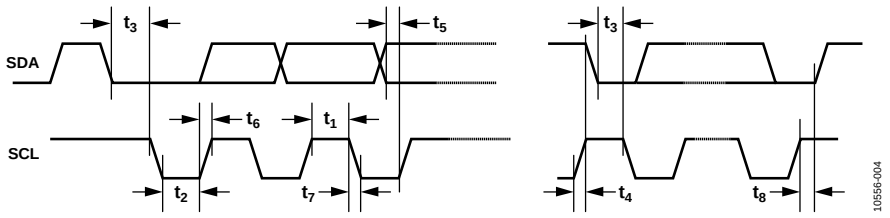

Figure 4. I²C Timing

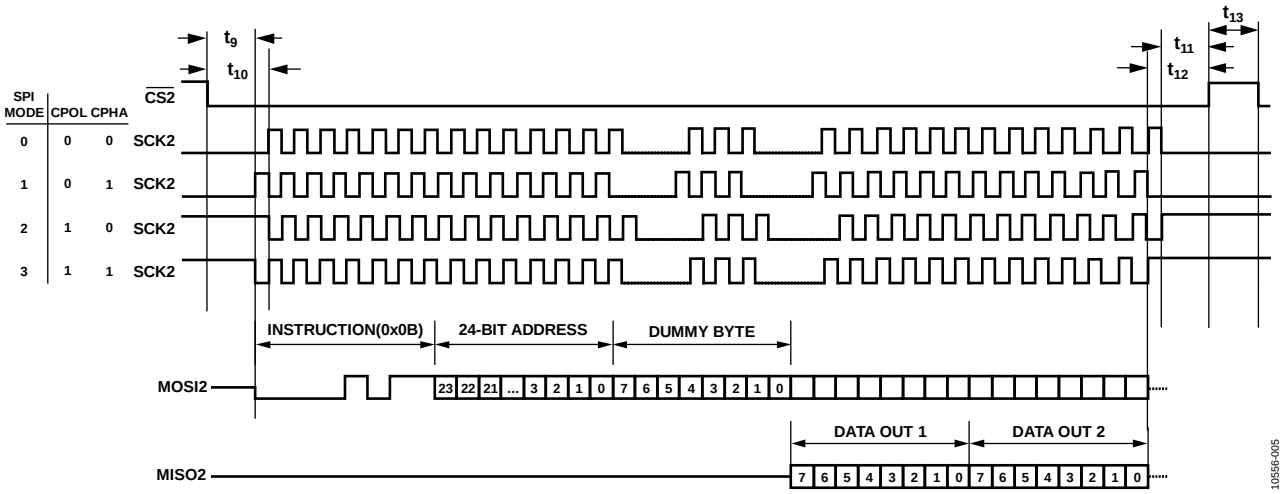

Figure 5. Detailed SPI Master Timing Diagram (Serial Port 2)

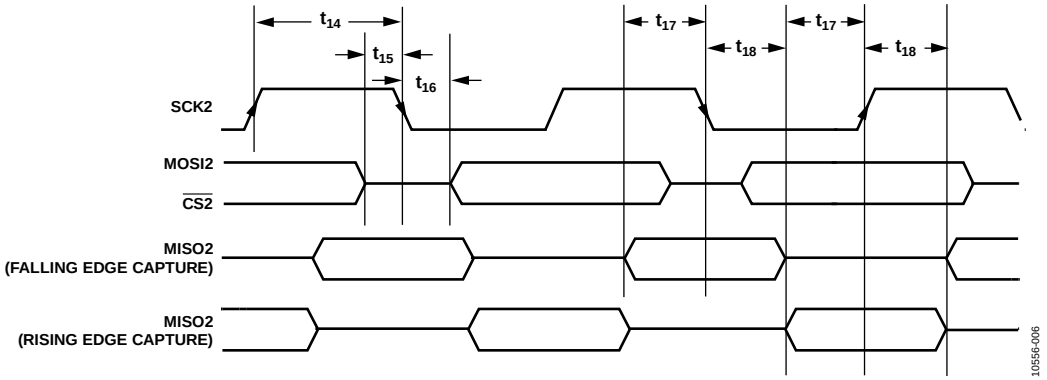

Figure 6. Serial Port 2 Master Mode Timing (SPI Mode 0 and SPI Mode 3)

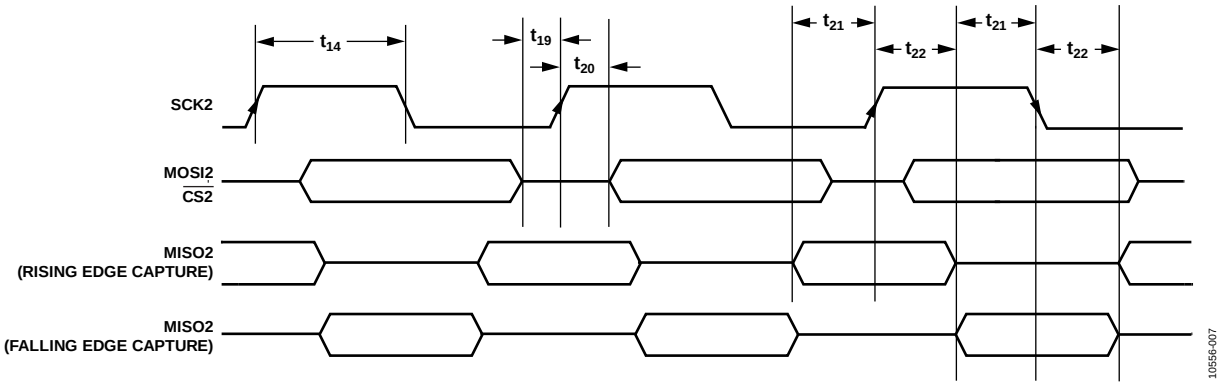

Figure 7. Serial Port 2 Master Mode Timing (SPI Mode 1 and SPI Mode 2)

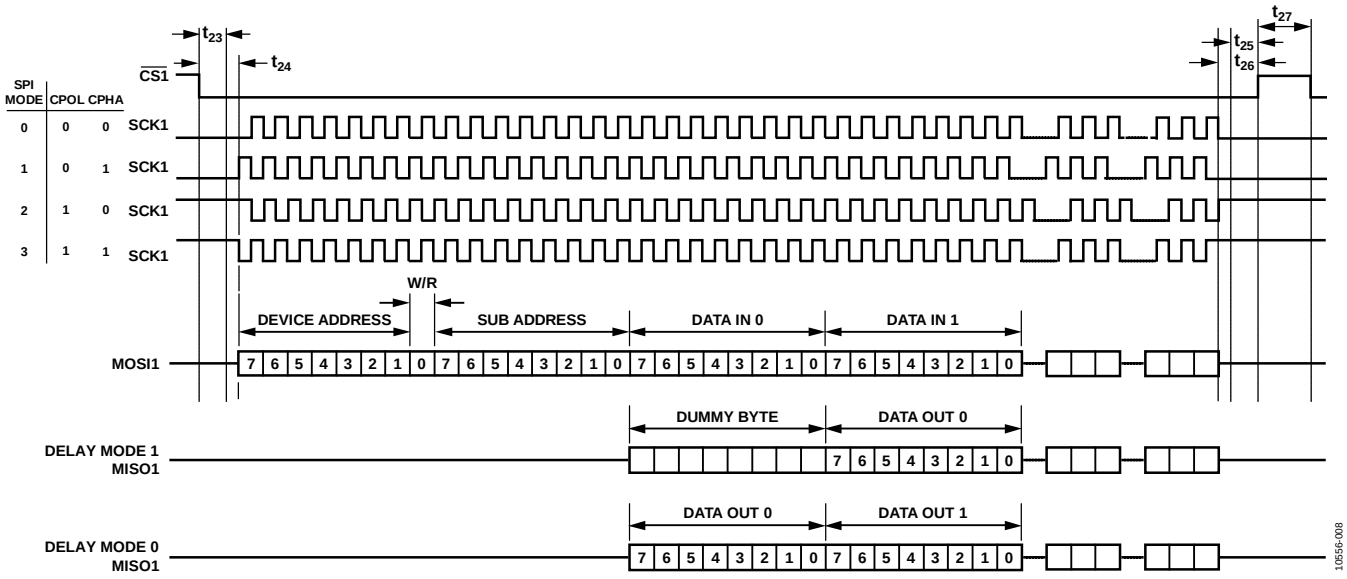

Figure 8. Detailed SPI Slave Timing Diagram (Serial Port 1)

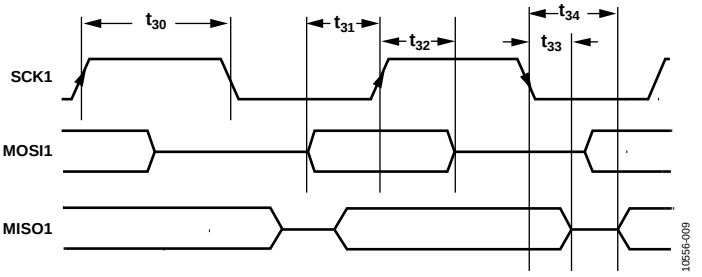

Figure 9. Serial Port 1 Slave Mode Timing (SPI Mode 0 and SPI Mode 3)

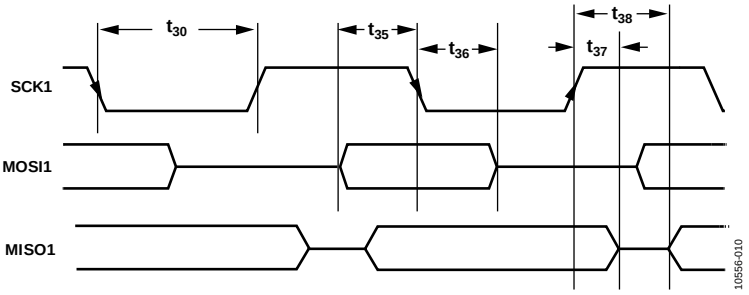

Figure 10. Serial Port 1 Slave Mode Timing (SPI Mode 1 and SPI Mode 2)

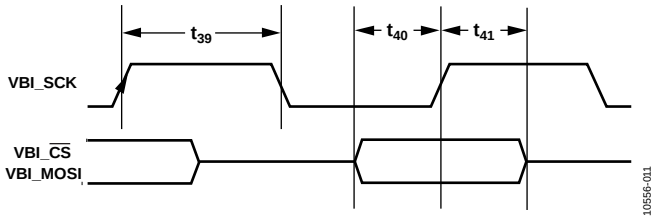

Figure 11. Serial Port 3 Slave Mode Timing (SPI Mode 0 Only)

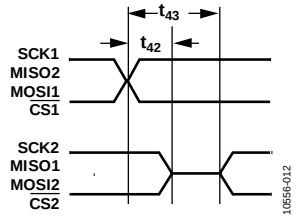

Figure 12. SPI Pass-Through Mode (Serial Port 1 and Serial Port 2)

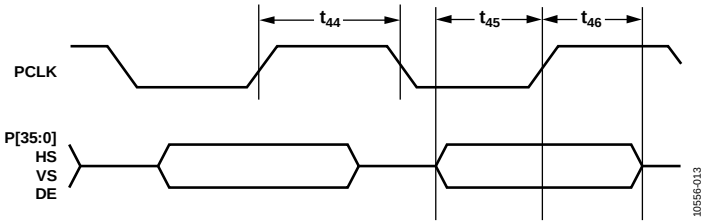

Figure 13. Main Video Input, Noninterleaved SDR Video Data and Control Timing

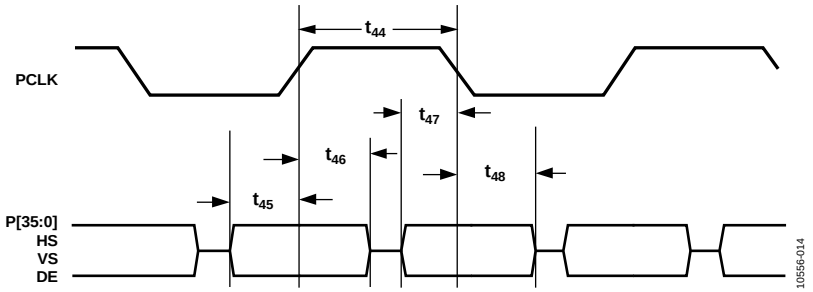

Figure 14. Main Video Input, Noninterleaved DDR Video Data and Control Timing

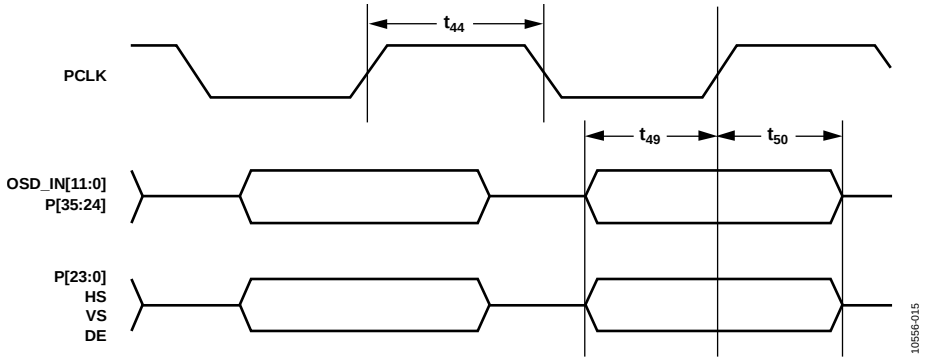

Figure 15. Interleaved SDR Video Data and Control Input Timing

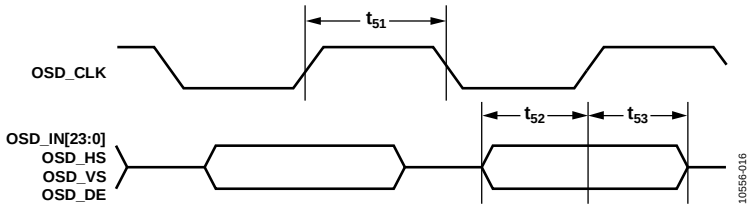

Figure 16. External OSD Input, Noninterleaved SDR Video Data and Control Timing

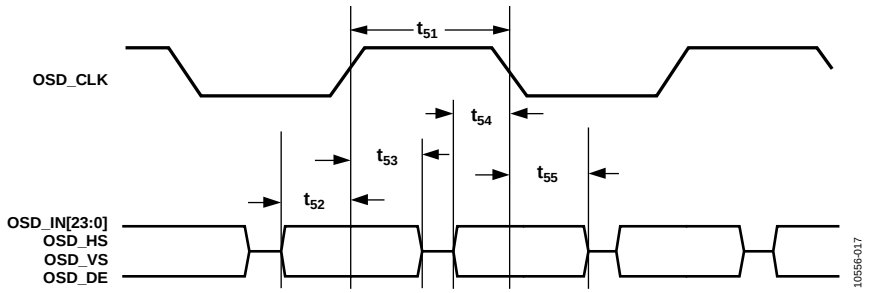

Figure 17. External OSD Input, Noninterleaved DDR Video Data and Control Timing

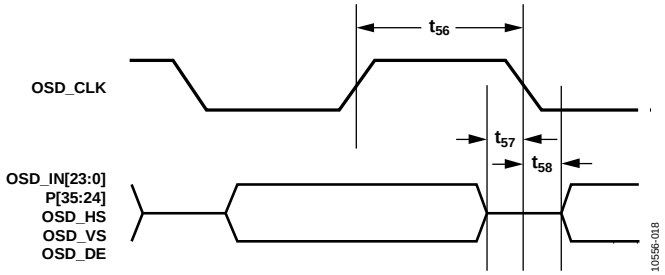

Figure 18. SDR Video Data and Control Output Timing (Data Launched on Falling Edge)

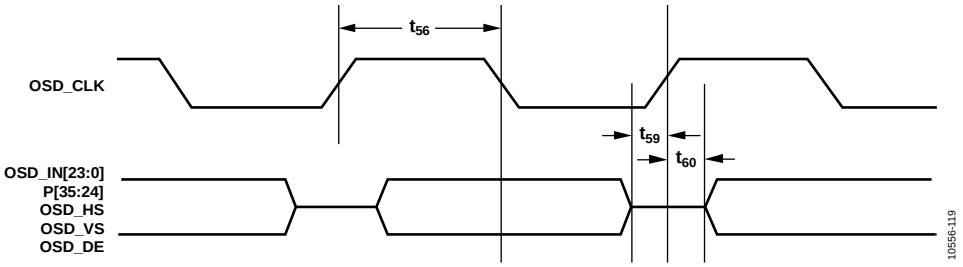

Figure 19. SDR Video Data and Control Output Timing (Data Launched on Rising Edge)

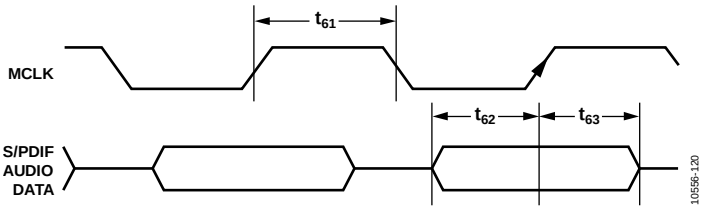

Figure 20. S/PDIF Input Timing, Data Latched on Rising Edge

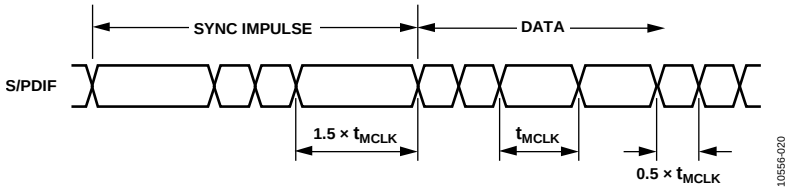

Figure 21. S/PDIF Data Timing

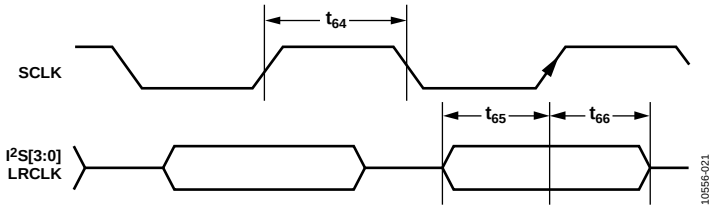

Figure 22. I²S Timing

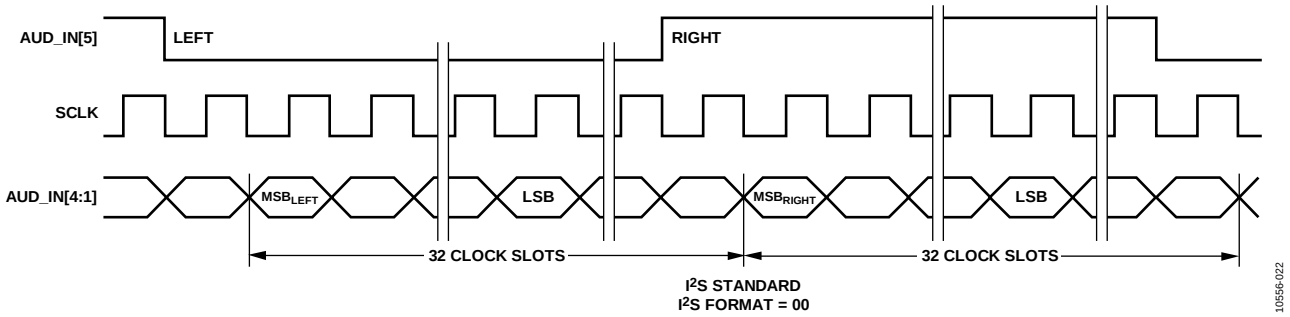

Figure 23. I²S Standard Audio—Data Width of 16 Bits to 24 Bits per Channel

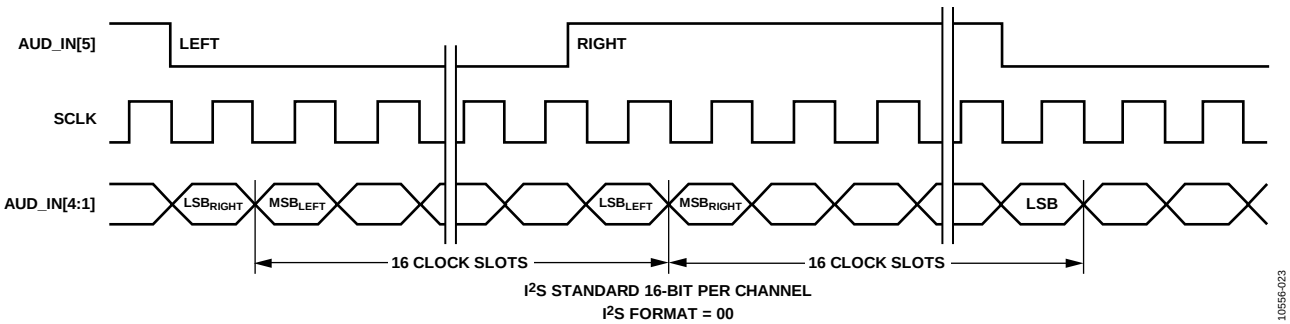

Figure 24. I²S Standard Audio—16-Bit Samples Only

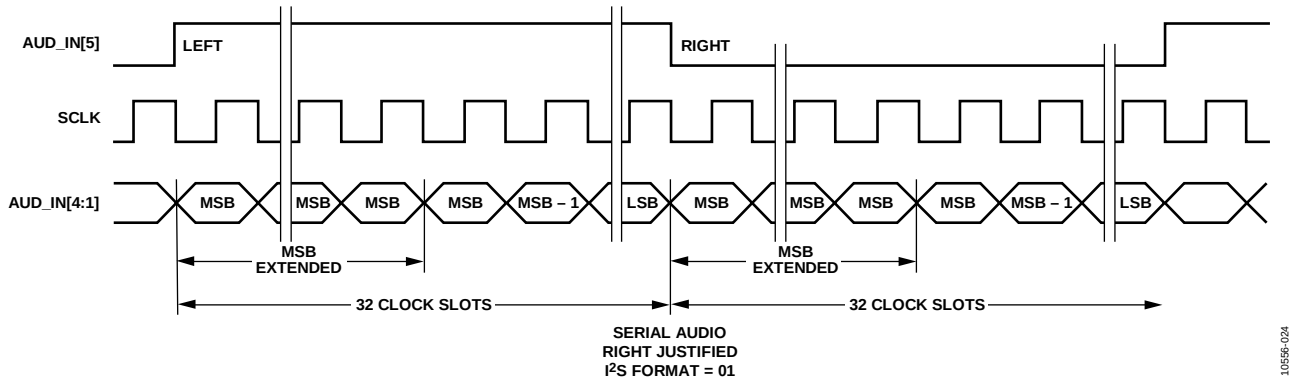

Figure 25. Serial Audio—Right-Justified

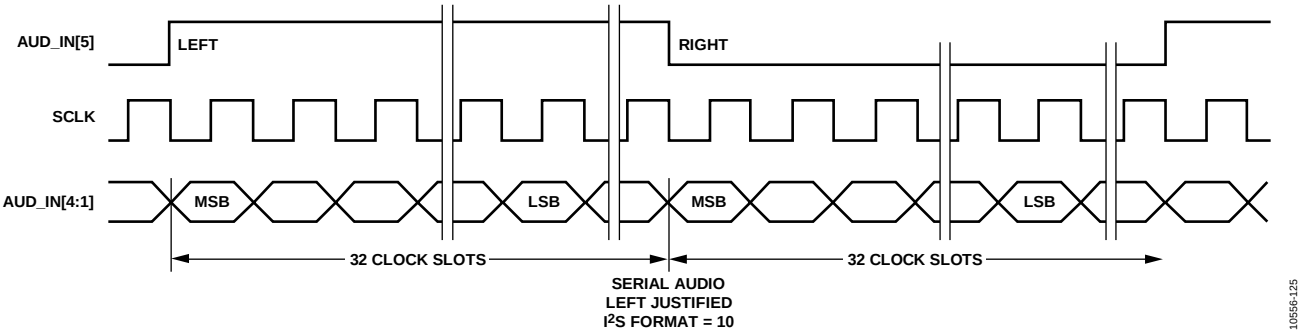

Figure 26. Serial Audio—Left-Justified

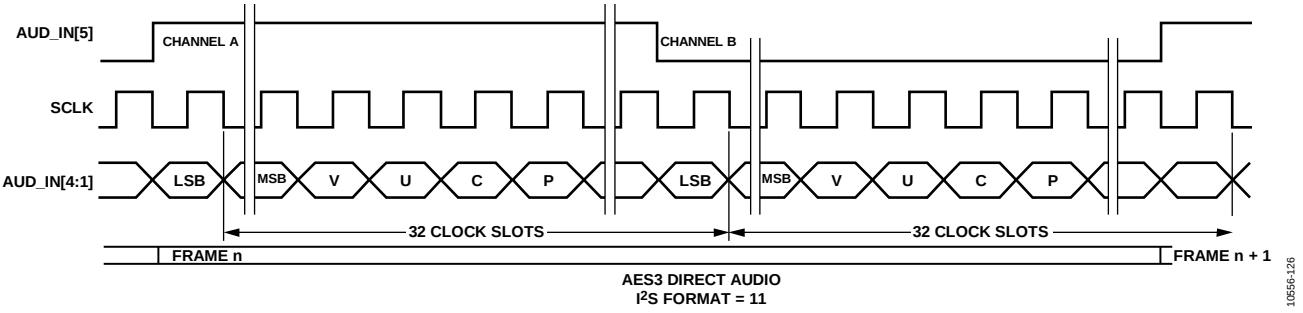

Figure 27. AES3 Direct Audio

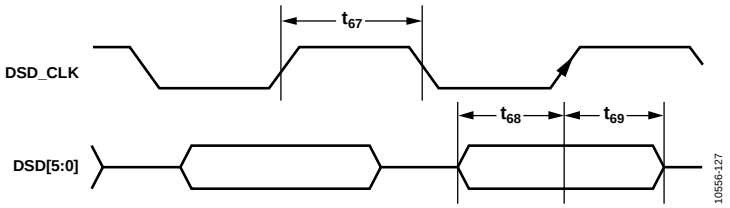

Figure 28. DSD Timing

ABSOLUTE MAXIMUM RATINGS

Table 5.

Parameter	Rating
AVDD1, ADDD2, DVDD_IO to GND	3.9 V
DVDD, PVDDx, CVDD1, AVDD3, DVDD_DDR, PVDD_DDR to GND	2.2 V
DVDD to Other 1.8 V Power Supplies[1]	−0.3 V to +0.3 V
PVDD1 to Other 1.8 V Power Supplies[1]	−0.3 V to +0.3 V
PVDD2 to Other 1.8 V Power Supplies[1]	−0.3 V to +0.3 V
PVDD3 to Other 1.8 V Power Supplies[1]	−0.3 V to +0.3 V
PVDD5 to Other 1.8 V Power Supplies[1]	−0.3 V to +0.3 V
PVDD6 to Other 1.8 V Power Supplies[1]	−0.3 V to +0.3 V
CVDD1 to Other 1.8 V Power Supplies[1]	−0.3 V to +0.3 V
AVDD3 to Other 1.8 V Power Supplies[1]	−0.3 V to +0.3 V
DVDD_DDR to Other 1.8 V Power Supplies[1]	−0.3 V to +0.3 V
PVDD_DDR to Other 1.8 V Power Supplies[1]	−0.3 V to +0.3 V
Digital Inputs to GND	−0.3 V to DVDD_IO + 0.3 V
Serial Video Inputs to GND	−0.3 V to CVDD1 + 0.3 V
DDR_IO and DDR_VREF to GND	−0.3 V to DVDD_DDR + 0.3 V
5 V Tolerant Digital Inputs to GND[2]	−0.3 V to +5.5 V
1.8 V Analog Inputs to GND	−0.3 V to AVDD3 + 0.3 V
3.3 V Analog Inputs to GND	−0.3 V to AVDD2 + 0.3 V
HDMI Digital Outputs to GND	−0.3 V to AVDD3 + 0.3 V
Digital Outputs Voltage to GND	−0.3 V to DVDD_IO + 0.3 V
Analog Outputs Voltage to GND[3]	−0.3 V to AVDD2 + 0.3 V
Maximum Junction Temperature ($T_{J\ MAX}$)	125°C
Storage Temperature Range	−65°C to+150°C
Infrared Reflow Soldering (20 sec)	260°C

[1] 1.8 V power supplies include DVDD, PVDD1, PVDD2, PVDD3, PVDD5, PVDD6, CVDD1, AVDD3, DVDD_DDR, and PVDD_DR.
[2] The following inputs are 5 V tolerant: CEC1, CEC2, DDC1_SCL, DDC2_SCL, DDC1_SDA, DDC2_SDA, HEAC_1−, HEAC_1+, HEAC_2−, HEAC_2+, RX_5V, and RX_HPD.
[3] Except the ELPF1 and ELPF2 outputs, which are kept to −0.3 V to PVDD3 + 0.3 V; the RTERM output, which is kept to −0.3 V to CVDD1 + 0.3 V; and the R_TX1 and R_TX2 outputs, which are kept to −0.3 V to PVDD5 + 0.3 V.

Stresses above those listed under Absolute Maximum Ratings may cause permanent damage to the device. This is a stress rating only; functional operation of the device at these or any other conditions above those indicated in the operational section of this specification is not implied. Exposure to absolute maximum rating conditions for extended periods may affect device reliability.

ESD CAUTION



ESD (electrostatic discharge) sensitive device. Charged devices and circuit boards can discharge without detection. Although this product features patented or proprietary protection circuitry, damage may occur on devices subjected to high energy ESD. Therefore, proper ESD precautions should be taken to avoid performance degradation or loss of functionality.

PIN CONFIGURATION AND FUNCTION DESCRIPTIONS

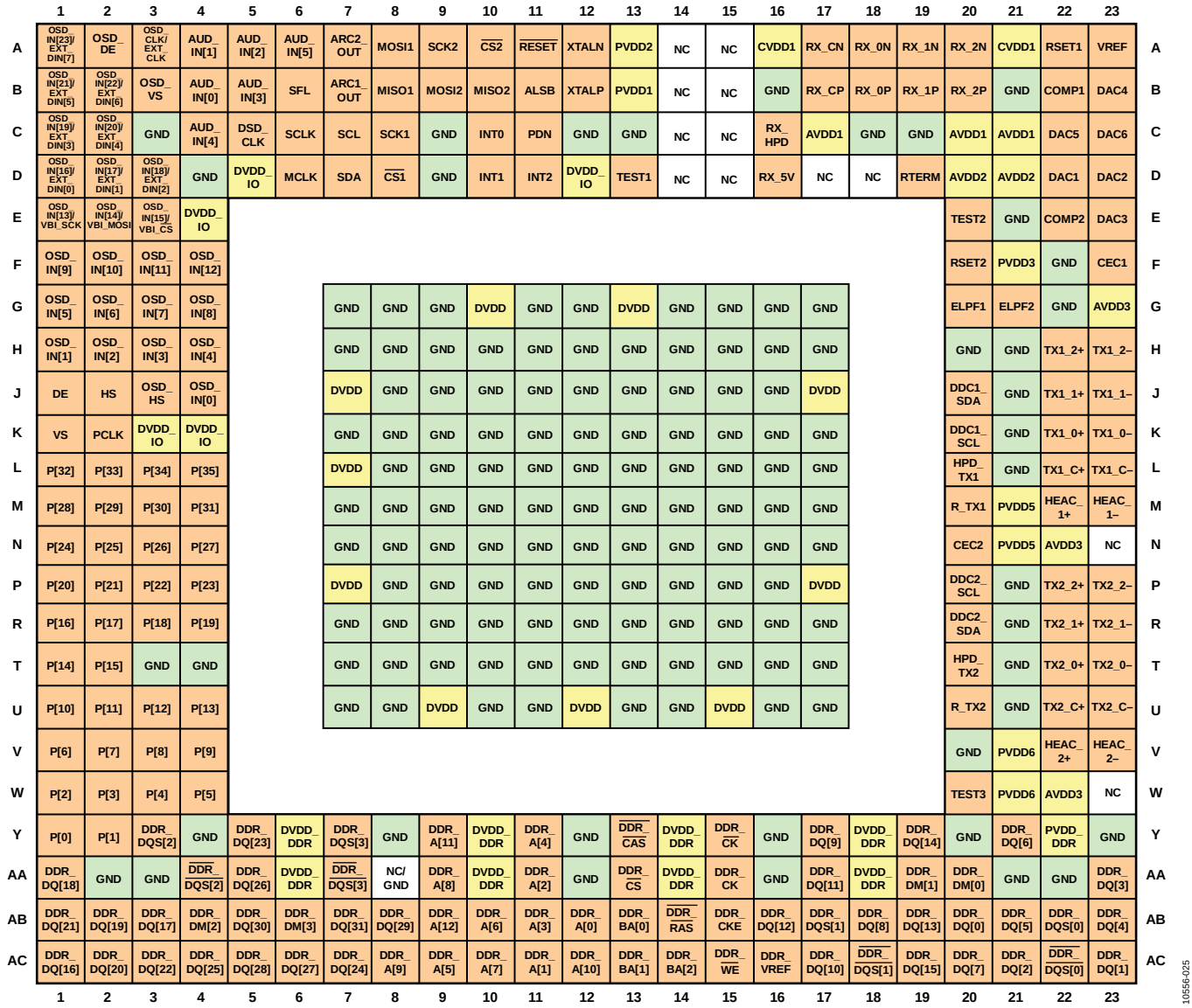

Figure 29. ADV8003KBCZ-8 and ADV8003KBCZ-7 Pin Configuration

Table 6. ADV8003KBCZ-8 and ADV8003KBCZ-7 Pin Function Descriptions

Pin No.	Mnemonic	Type	Description
A1	OSD_IN[23]/EXT_DIN[7]	OSD video input/ miscellaneous digital	External OSD Video Pixel Input Port (OSD_IN[23])/Additional TTL Input for External CCIR 656 Video Data (EXT_DIN[7]).
A2	OSD_DE	OSD video sync	Data Enable for the OSD Input Port.
A3	OSD_CLK/EXT_CLK	OSD video sync	Pixel Clock for the OSD Input Port (OSD_CLK)/Pixel Clock for External Video Data (EXT_CLK).
A4	AUD_IN[1]	Audio input	I^2S0/DSD1 Audio Input.
A5	AUD_IN[2]	Audio input	I^2S1/DSD2 Audio Input.
A6	AUD_IN[5]	Audio input	LRCLK/DSD5 Audio Input.
A7	ARC2_OUT	Audio output	Audio Return Channel for HDMI Tx2.
A8	MOSI1	Serial port control	Master Out Slave In (Serial Port 1). Serial Port 1 is used for OSD control.
A9	SCK2	Serial port control	Serial Clock (Serial Port 2). Serial Port 2 is used for the external flash ROM.
A10	$\overline{CS2}$	Serial port control	Chip Select (Serial Port 2). Serial Port 2 is used for the external flash ROM.
A11	$\overline{RESET}$	Miscellaneous digital	Reset Pin.
A12	XTALN	Miscellaneous digital[1]	Crystal Input.
A13	PVDD2	Power	PLL Digital Supply Voltage (1.8 V).
A14	NC	N/A	No Connect. Do not connect to this pin.
A15	NC	N/A	No Connect. Do not connect to this pin.
A16	CVDD1	Power	Comparator Supply Voltage (1.8 V).
A17	RX_CN	Rx input	Rx Clock Complement Input.
A18	RX_0N	Rx input	Rx Channel 0 Complement Input.
A19	RX_1N	Rx input	Rx Channel 1 Complement Input.
A20	RX_2N	Rx input	Rx Channel 2 Complement Input.
A21	CVDD1	Power	Comparator Supply Voltage (1.8 V).
A22	RSET1	Miscellaneous analog[1]	Resistor Current Setting for Encoder DACs: DAC1, DAC2, and DAC3. Place the RSET1 resistor as close as possible to the ADV8003.
A23	VREF	Miscellaneous analog[1]	Optional External Voltage Reference Input for DACs or Voltage Reference Output. Place VREF voltage components as close as possible to the ADV8003.
B1	OSD_IN[21]/EXT_DIN[5]	OSD video input/ miscellaneous digital	External OSD Video Pixel Input Port (OSD_IN[21])/Additional TTL Input for External CCIR 656 Video Data (EXT_DIN[5]).
B2	OSD_IN[22]/EXT_DIN[6]	OSD video input/ miscellaneous digital	External OSD Video Pixel Input Port (OSD_IN[22])/Additional TTL Input for External CCIR 656 Video Data (EXT_DIN[6]).
B3	OSD_VS	OSD video sync	Vertical Sync for the OSD Input Port.
B4	AUD_IN[0]	Audio input	S/PDIF/DSD0 Audio Input.
B5	AUD_IN[3]	Audio input	I^2S2/DSD3 Audio Input.
B6	SFL	SFL	Subcarrier Frequency Lock Signal (SFL).
B7	ARC1_OUT	Audio output	Audio Return Channel for HDMI Tx1.
B8	MISO1	Serial port control	Master In Slave Out (Serial Port 1). Serial Port 1 is used for OSD control.
B9	MOSI2	Serial port control	Master Out Slave In (Serial Port 2). Serial Port 2 is used for the external flash ROM.
B10	MISO2	Serial port control	Master In Slave Out (Serial Port 2). Serial Port 2 is used for the external flash ROM.
B11	ALSB	I^2C control	Sets LSB of I^2C address. When the ALSB pin is set low, the I^2C address is 0x18; when the ALSB pin is set high, the I^2C address is 0x1A.
B12	XTALP	Miscellaneous digital[1]	Crystal Input.
B13	PVDD1	Power	PLL Analog Supply Voltage (1.8 V).
B14	NC	N/A	No Connect. Do not connect to this pin.
B15	NC	N/A	No Connect. Do not connect to this pin.
B16	GND	GND	Ground.
B17	RX_CP	Rx input	Rx Clock True Input.
B18	RX_0P	Rx input	Rx Channel 0 True Input.
B19	RX_1P	Rx input	Rx Channel 1 True Input.
B20	RX_2P	Rx input	Rx Channel 2 True Input.
B21	GND	GND	Ground.
B22	COMP1	Miscellaneous analog[1]	Compensation Pin. Connect a 2.2 nF capacitor from COMP1 to AVDD2.
B23	DAC4	Analog video output	Encoder DAC4 Output.

Pin No.	Mnemonic	Type	Description
C1	OSD_IN[19]/EXT_DIN[3]	OSD video input/ miscellaneous digital	External OSD Video Pixel Input Port (OSD_IN[19])/Additional TTL Input for External CCIR 656 Video Data (EXT_DIN[3]).
C2	OSD_IN[20]/EXT_DIN[4]	OSD video input/ miscellaneous digital	External OSD Video Pixel Input Port (OSD_IN[20])/Additional TTL Input for External CCIR 656 Video Data (EXT_DIN[4]).
C3	GND	GND	Ground.
C4	AUD_IN[4]	Audio input	I^2S3/DSD4 Audio Input.
C5	DSD_CLK	Audio input	DSD Audio Clock Input.
C6	SCLK	Audio input	I^2S Bit Clock Input.
C7	SCL	I^2C control	I^2C Clock Input. SCL is open drain; use a 4.7 kΩ resistor to connect this pin to a 3.3 V supply.
C8	SCK1	Serial port control	Serial Clock (Serial Port 1). Serial Port 1 is used for OSD control.
C9	GND	GND	Ground.
C10	INT0	Miscellaneous digital	Interrupt Pin 0. When status bits change, this pin is triggered.
C11	PDN	Miscellaneous digital	Power-Down. This pin controls the power state of the ADV8003.
C12	GND	GND	Ground.
C13	GND	GND	Ground.
C14	NC	N/A	No Connect. Do not connect to this pin.
C15	NC	N/A	No Connect. Do not connect to this pin.
C16	RX_HPD	Rx input	Hot Plug Assert Signal Output for the Rx Input.
C17	AVDD1	Power	HDMI Rx Inputs Analog Supply (3.3 V).
C18	GND	GND	Ground.
C19	GND	GND	Ground.
C20	AVDD1	Power	HDMI Rx Inputs Analog Supply (3.3 V).
C21	AVDD1	Power	HDMI Rx Inputs Analog Supply (3.3 V).
C22	DAC5	Analog video output	Encoder DAC5 Output.
C23	DAC6	Analog video output	Encoder DAC6 Output.
D1	OSD_IN[16]/EXT_DIN[0]	OSD video input/ miscellaneous digital	External OSD Video Pixel Input Port (OSD_IN[16])/Additional TTL Input for External CCIR 656 Video Data (EXT_DIN[0]).
D2	OSD_IN[17]/EXT_DIN[1]	OSD video input/ miscellaneous digital	External OSD Video Pixel Input Port (OSD_IN[17])/Additional TTL Input for External CCIR 656 Video Data (EXT_DIN[1]).
D3	OSD_IN[18]/EXT_DIN[2]	OSD video input/ miscellaneous digital	External OSD Video Pixel Input Port (OSD_IN[18])/Additional TTL Input for External CCIR 656 Video Data (EXT_DIN[2]).
D4	GND	GND	Ground.
D5	DVDD_IO	Power	Digital Interface Supply (3.3 V).
D6	MCLK	Audio input	MCLK for S/PDIF Input Audio.
D7	SDA	I^2C control	I^2C Data Input. SDA is open drain; use a 4.7 kΩ resistor to connect this pin to a 3.3 V supply.
D8	$\overline{CS1}$	Serial port control	Chip Select (Serial Port 1). Serial Port 1 is used for OSD control.
D9	GND	GND	Ground.
D10	INT1	Miscellaneous digital	Interrupt Pin for HDMI Transmitter Outputs. When status bits change, an interrupt is generated on this pin.
D11	INT2	Miscellaneous digital	Interrupt Pin for HDMI Receiver Input Lines. When status bits change, an interrupt is generated on this pin.
D12	DVDD_IO	Power	Digital Interface Supply (3.3 V).
D13	TEST1	Miscellaneous digital	Test Pin. Float this pin.
D14	NC	N/A	No Connect. Do not connect to this pin.
D15	NC	N/A	No Connect. Do not connect to this pin.
D16	RX_5V	Rx input	5 V Detect Pin for the Rx Input.
D17	NC	N/A	No Connect. Do not connect to this pin.
D18	NC	N/A	No Connect. Do not connect to this pin.
D19	RTERM	HDMI Rx input	This pin sets internal termination resistance. Use a 500 Ω resistor between this pin and GND. Place the RTERM resistor as close as possible to the ADV8003.
D20	AVDD2	Power	Analog Power Supply (3.3 V).
D21	AVDD2	Power	Analog Power Supply (3.3 V).
D22	DAC1	Analog video output	Encoder DAC1 Output.
D23	DAC2	Analog video output	Encoder DAC2 Output.

Pin No.	Mnemonic	Type	Description
E1	OSD_IN[13]/VBI_SCK	OSD video input/ miscellaneous digital	External OSD Video Pixel Input Port (OSD_IN[13])/Serial Clock for VBI Data Serial Port (VBI_SCK).
E2	OSD_IN[14]/VBI_MOSI	OSD video input/ miscellaneous digital	External OSD Video Pixel Input Port (OSD_IN[14])/Master Out Slave In for VBI Data Serial Port (VBI_MOSI).
E3	OSD_IN[15]/VBI_$\overline{CS}$	OSD video input/ miscellaneous digital	External OSD Video Pixel Input Port (OSD_IN[15])/Chip Select for VBI Data Serial Port (VBI_$\overline{CS}$).
E4	DVDD_IO	Power	Digital Interface Supply (3.3 V).
E20	TEST2	Miscellaneous analog	Test Pin. Float this pin.
E21	GND	GND	Ground.
E22	COMP2	Miscellaneous analog[1]	Compensation Pin. Connect a 2.2 nF capacitor to AVDD2.
E23	DAC3	Analog video output	Encoder DAC3 Output.
F1	OSD_IN[9]	OSD video input	External OSD Video Pixel Input Port (OSD_IN[9]).
F2	OSD_IN[10]	OSD video input	External OSD Video Pixel Input Port (OSD_IN[10]).
F3	OSD_IN[11]	OSD video input	External OSD Video Pixel Input Port (OSD_IN[11]).
F4	OSD_IN[12]	OSD video input/ miscellaneous digital	External OSD Video Pixel Input Port (OSD_IN[12]).
F20	RSET2	Miscellaneous analog[1]	Resistor Current Setting for Encoder DACs: DAC4, DAC5, and DAC6. Place the RSET2 resistor as close as possible to the ADV8003.
F21	PVDD3	Power	PLL Supply (1.8 V).
F22	GND	GND	Ground.
F23	CEC1	HDMI Tx1	HDMI Tx1 Consumer Electronics Control (CEC).
G1	OSD_IN[5]	OSD video input	External OSD Video Pixel Input Port (OSD_IN[5]).
G2	OSD_IN[6]	OSD video input	External OSD Video Pixel Input Port (OSD_IN[6]).
G3	OSD_IN[7]	OSD video input	External OSD Video Pixel Input Port (OSD_IN[7]).
G4	OSD_IN[8]	OSD video input	External OSD Video Pixel Input Port (OSD_IN[8]).
G7	GND	GND	Ground.
G8	GND	GND	Ground.
G9	GND	GND	Ground.
G10	DVDD	Power	Digital Power Supply (1.8 V).
G11	GND	GND	Ground.
G12	GND	GND	Ground.
G13	DVDD	Power	Digital Power Supply (1.8 V).
G14	GND	GND	Ground.
G15	GND	GND	Ground.
G16	GND	GND	Ground.
G17	GND	GND	Ground.
G20	ELPF1	Miscellaneous analog[1]	External Loop Filter for PLL 1. Connect to PVDD3.
G21	ELPF2	Miscellaneous analog[1]	External Loop Filter for PLL 2. Connect to PVDD3.
G22	GND	GND	Ground.
G23	AVDD3	Power	HDMI Analog Power Supply (1.8 V).
H1	OSD_IN[1]	OSD video input	External OSD Video Pixel Input Port (OSD_IN[1]).
H2	OSD_IN[2]	OSD video input	External OSD Video Pixel Input Port (OSD_IN[2]).
H3	OSD_IN[3]	OSD video input	External OSD Video Pixel Input Port (OSD_IN[3]).
H4	OSD_IN[4]	OSD video input	External OSD Video Pixel Input Port (OSD_IN[4]).
H7	GND	GND	Ground.
H8	GND	GND	Ground.
H9	GND	GND	Ground.
H10	GND	GND	Ground.
H11	GND	GND	Ground.
H12	GND	GND	Ground.
H13	GND	GND	Ground.
H14	GND	GND	Ground.
H15	GND	GND	Ground.
H16	GND	GND	Ground.
H17	GND	GND	Ground.
H20	GND	GND	Ground.

Pin No.	Mnemonic	Type	Description
H21	GND	GND	Ground.
H22	TX1_2+	HDMI Tx1	HDMI1 Channel 2 True Output.
H23	TX1_2−	HDMI Tx1	HDMI1 Channel 2 Complementary Output.
J1	DE	Digital video sync	Data Enable for Digital Input Video.
J2	HS	Digital video sync	Horizontal Sync for Digital Input Video.
J3	OSD_HS	Digital video sync	Horizontal Sync for the OSD Input Port (OSD_HS).
J4	OSD_IN[0]	OSD video input	External OSD Video Pixel Input Port (OSD_IN[0]).
J7	DVDD	Power	Digital Power Supply (1.8 V).
J8	GND	GND	Ground.
J9	GND	GND	Ground.
J10	GND	GND	Ground.
J11	GND	GND	Ground.
J12	GND	GND	Ground.
J13	GND	GND	Ground.
J14	GND	GND	Ground.
J15	GND	GND	Ground.
J16	GND	GND	Ground.
J17	DVDD	Power	Digital Power Supply (1.8 V).
J20	DDC1_SDA	HDMI Tx1	HDCP Slave Serial Data for HDMI Tx1. This pin is open drain; use a 2 kΩ resistor to connect this pin to the HDMI Tx 5 V supply.
J21	GND	GND	Ground.
J22	TX1_1+	HDMI Tx1	HDMI1 Channel 1 True Output.
J23	TX1_1−	HDMI Tx1	HDMI1 Channel 1 Complementary Output.
K1	VS	Digital video sync	Vertical Sync for Digital Input Video.
K2	PCLK	Digital video sync	Pixel Clock for Digital Input Video.
K3	DVDD_IO	Power	Digital Interface Supply (3.3 V).
K4	DVDD_IO	Power	Digital Interface Supply (3.3 V).
K7	GND	GND	Ground.
K8	GND	GND	Ground.
K9	GND	GND	Ground.
K10	GND	GND	Ground.
K11	GND	GND	Ground.
K12	GND	GND	Ground.
K13	GND	GND	Ground.
K14	GND	GND	Ground.
K15	GND	GND	Ground.
K16	GND	GND	Ground.
K17	GND	GND	Ground.
K20	DDC1_SCL	HDMI Tx1	HDCP Slave Serial Clock for HDMI Tx1. This pin is open drain; use a 2 kΩ resistor to connect this pin to the HDMI Tx 5 V supply.
K21	GND	GND	Ground.
K22	TX1_0+	HDMI Tx1	HDMI1 Channel 0 True Output.
K23	TX1_0−	HDMI Tx1	HDMI1 Channel 0 Complementary Output.
L1	P[32]	Digital video input	Digital Video Input Bus[35:0].
L2	P[33]	Digital video input	Digital Video Input Bus[35:0].
L3	P[34]	Digital video input	Digital Video Input Bus[35:0].
L4	P[35]	Digital video input	Digital Video Input Bus[35:0].
L7	DVDD	Power	Digital Power Supply (1.8 V).
L8	GND	GND	Ground.
L9	GND	GND	Ground.
L10	GND	GND	Ground.
L11	GND	GND	Ground.
L12	GND	GND	Ground.
L13	GND	GND	Ground.
L14	GND	GND	Ground.
L15	GND	GND	Ground.

Pin No.	Mnemonic	Type	Description
L16	GND	GND	Ground.
L17	GND	GND	Ground.
L20	HPD_TX1	HDMI Tx1	Hot Plug Assert Signal Input for HDMI Tx1.
L21	GND	GND	Ground.
L22	TX1_C+	HDMI Tx1	HDMI1 Clock True Output.
L23	TX1_C−	HDMI Tx1	HDMI1 Clock Complementary Output.
M1	P[28]	Digital video input	Digital Video Input Bus[35:0].
M2	P[29]	Digital video input	Digital Video Input Bus[35:0].
M3	P[30]	Digital video input	Digital Video Input Bus[35:0].
M4	P[31]	Digital video input	Digital Video Input Bus[35:0].
M7	GND	GND	Ground.
M8	GND	GND	Ground.
M9	GND	GND	Ground.
M10	GND	GND	Ground.
M11	GND	GND	Ground.
M12	GND	GND	Ground.
M13	GND	GND	Ground.
M14	GND	GND	Ground.
M15	GND	GND	Ground.
M16	GND	GND	Ground.
M17	GND	GND	Ground.
M20	R_TX1	HDMI Tx1[1]	Sets Internal Reference Currents. Place a 470 Ω resistor (1% tolerance) between this pin and ground, as close as possible to the ADV8003.
M21	PVDD5	Power[1]	HDMI Tx PLL Power Supply (1.8 V).
M22	HEAC_1+	HDMI Tx1	HDMI Tx1 HEAC+ from the HDMI Connector.
M23	HEAC_1−	HDMI Tx1	HDMI Tx1 HEAC− from the HDMI Connector.
N1	P[24]	Digital video input	Digital Video Input Bus[35:0].
N2	P[25]	Digital video input	Digital Video Input Bus[35:0].
N3	P[26]	Digital video input	Digital Video Input Bus[35:0].
N4	P[27]	Digital video input	Digital Video Input Bus[35:0].
N7	GND	GND	Ground.
N8	GND	GND	Ground.
N9	GND	GND	Ground.
N10	GND	GND	Ground.
N11	GND	GND	Ground.
N12	GND	GND	Ground.
N13	GND	GND	Ground.
N14	GND	GND	Ground.
N15	GND	GND	Ground.
N16	GND	GND	Ground.
N17	GND	GND	Ground.
N20	CEC2	HDMI Tx2	HDMI Tx2 Consumer Electronics Control (CEC).
N21	PVDD5	Power[1]	HDMI Tx PLL Power Supply (1.8 V).
N22	AVDD3	Power	HDMI Analog Power Supply (1.8 V).
N23	NC	N/A	No Connect. Do not connect to this pin.
P1	P[20]	Digital video input	Digital Video Input Bus[35:0].
P2	P[21]	Digital video input	Digital Video Input Bus[35:0].
P3	P[22]	Digital video input	Digital Video Input Bus[35:0].
P4	P[23]	Digital video input	Digital Video Input Bus[35:0].
P7	DVDD	Power	Digital Power Supply (1.8 V).
P8	GND	GND	Ground.
P9	GND	GND	Ground.
P10	GND	GND	Ground.
P11	GND	GND	Ground.
P12	GND	GND	Ground.
P13	GND	GND	Ground.

Pin No.	Mnemonic	Type	Description
P14	GND	GND	Ground.
P15	GND	GND	Ground.
P16	GND	GND	Ground.
P17	DVDD	Power	Digital Power Supply (1.8 V).
P20	DDC2_SCL	HDMI Tx2	HDCP Slave Serial Clock for HDMI Tx2. This pin is open drain; use a 2 kΩ resistor to connect this pin to the HDMI Tx 5 V supply.
P21	GND	GND	Ground.
P22	TX2_2+	HDMI Tx2	HDMI2 Channel 2 True Output.
P23	TX2_2−	HDMI Tx2	HDMI2 Channel 2 Complementary Output.
R1	P[16]	Digital video input	Digital Video Input Bus[35:0].
R2	P[17]	Digital video input	Digital Video Input Bus[35:0].
R3	P[18]	Digital video input	Digital Video Input Bus[35:0].
R4	P[19]	Digital video input	Digital Video Input Bus[35:0].
R7	GND	GND	Ground.
R8	GND	GND	Ground.
R9	GND	GND	Ground.
R10	GND	GND	Ground.
R11	GND	GND	Ground.
R12	GND	GND	Ground.
R13	GND	GND	Ground.
R14	GND	GND	Ground.
R15	GND	GND	Ground.
R16	GND	GND	Ground.
R17	GND	GND	Ground.
R20	DDC2_SDA	HDMI Tx2	HDCP Slave Serial Data for HDMI Tx2. This pin is open drain; use a 2 kΩ resistor to connect this pin to the HDMI Tx 5 V supply.
R21	GND	GND	Ground.
R22	TX2_1+	HDMI Tx2	HDMI2 Channel 1 True Output.
R23	TX2_1−	HDMI Tx2	HDMI2 Channel 1 Complementary Output.
T1	P[14]	Digital video input	Digital Video Input Bus[35:0].
T2	P[15]	Digital video input	Digital Video Input Bus[35:0].
T3	GND	GND	Ground.
T4	GND	GND	Ground.
T7	GND	GND	Ground.
T8	GND	GND	Ground.
T9	GND	GND	Ground.
T10	GND	GND	Ground.
T11	GND	GND	Ground.
T12	GND	GND	Ground.
T13	GND	GND	Ground.
T14	GND	GND	Ground.
T15	GND	GND	Ground.
T16	GND	GND	Ground.
T17	GND	GND	Ground.
T20	HPD_TX2	HDMI Tx2	Hot Plug Assert Signal Input for HDMI Tx2.
T21	GND	GND	Ground.
T22	TX2_0+	HDMI Tx2	HDMI2 Channel 0 True Output.
T23	TX2_0−	HDMI Tx2	HDMI2 Channel 0 Complementary Output.
U1	P[10]	Digital video input	Digital Video Input Bus[35:0].
U2	P[11]	Digital video input	Digital Video Input Bus[35:0].
U3	P[12]	Digital video input	Digital Video Input Bus[35:0].
U4	P[13]	Digital video input	Digital Video Input Bus[35:0].
U7	GND	GND	Ground.
U8	GND	GND	Ground.
U9	DVDD	Power	Digital Power Supply (1.8 V).
U10	GND	GND	Ground.

Pin No.	Mnemonic	Type	Description
U11	GND	GND	Ground.
U12	DVDD	Power	Digital Power Supply (1.8 V).
U13	GND	GND	Ground.
U14	GND	GND	Ground.
U15	DVDD	Power	Digital Power Supply (1.8 V).
U16	GND	GND	Ground.
U17	GND	GND	Ground.
U20	R_TX2	HDMI Tx2[1]	Sets internal reference currents. Place a 470 Ω resistor (1% tolerance) between this pin and ground, as close as possible to the ADV8003.
U21	GND	GND	Ground.
U22	TX2_C+	HDMI Tx2[1]	HDMI2 Clock True Output.
U23	TX2_C−	HDMI Tx2[1]	HDMI2 Clock Complementary Output.
V1	P[6]	Digital video input	Digital Video Input Bus[35:0].
V2	P[7]	Digital video input	Digital Video Input Bus[35:0].
V3	P[8]	Digital video input	Digital Video Input Bus[35:0].
V4	P[9]	Digital video input	Digital Video Input Bus[35:0].
V20	GND	GND	Ground.
V21	PVDD6	Power[1]	HDMI Tx PLL Power Supply (1.8 V).
V22	HEAC_2+	HDMI Tx2	HDMI Tx2 HEC+ from HDMI Connector.
V23	HEAC_2−	HDMI Tx2	HDMI Tx2 HEC− from HDMI Connector.
W1	P[2]	Digital video input	Digital Video Input Bus[35:0].
W2	P[3]	Digital video input	Digital Video Input Bus[35:0].
W3	P[4]	Digital video input	Digital Video Input Bus[35:0].
W4	P[5]	Digital video input	Digital Video Input Bus[35:0].
W20	TEST3	Miscellaneous digital	Test Pin. Connect this pin to ground through a 0.1 µF capacitor.
W21	PVDD6	Power[1]	HDMI Tx PLL Power Supply (1.8 V).
W22	AVDD3	Power	HDMI Analog Power Supply (1.8 V).
W23	NC	N/A	No Connect. Do not connect to this pin.
Y1	P[0]	Digital video input	Digital Video Input Bus[35:0].
Y2	P[1]	Digital video input	Digital Video Input Bus[35:0].
Y3	DDR_DQS[2]	DDR interface	Data Strobe for DDR Data Bytes[23:16].
Y4	GND	GND	Ground.
Y5	DDR_DQ[23]	DDR interface	Data Line. Interface to external RAM data lines.
Y6	DVDD_DDR	Power	DDR Interface Supply (1.8 V).
Y7	DDR_DQS[3]	DDR interface	Data Strobe for DDR Data Bytes[31:24].
Y8	GND	GND	Ground.
Y9	DDR_A[11]	DDR interface	Address Line. Interface to external RAM address lines.
Y10	DVDD_DDR	Power	DDR Interface Supply (1.8 V).
Y11	DDR_A[4]	DDR interface	Address Line. Interface to external RAM address lines.
Y12	GND	GND	Ground.
Y13	$\overline{\text{DDR_CAS}}$	DDR interface	Column Address Strobe for DDR Memory.
Y14	DVDD_DDR	Power	DDR Interface Supply (1.8 V).
Y15	DDR_$\overline{\text{CK}}$	DDR interface	DDR Memory Clock. Interface to external DDR RAM clock lines.
Y16	GND	GND	Ground.
Y17	DDR_DQ[9]	DDR interface	Data Line. Interface to external RAM data lines.
Y18	DVDD_DDR	Power	DDR Interface Supply (1.8 V).
Y19	DDR_DQ[14]	DDR interface	Data Line. Interface to external RAM data lines.
Y20	GND	GND	Ground.
Y21	DDR_DQ[6]	DDR interface	Data Line. Interface to external RAM data lines.
Y22	PVDD_DDR	Power	DDR Interface PLL Supply (1.8 V).
Y23	GND	GND	Ground.
AA1	DDR_DQ[18]	DDR interface	Data Line. Interface to external RAM data lines.
AA2	GND	GND	Ground.
AA3	GND	GND	Ground.
AA4	$\overline{\text{DDR_DQS[2]}}$	DDR interface	Data Strobe for DDR Data Bytes[23:16].

Pin No.	Mnemonic	Type	Description
AA5	DDR_DQ[26]	DDR interface	Data Line. Interface to external RAM data lines.
AA6	DVDD_DDR	Power	DDR Interface Supply (1.8 V).
AA7	$\overline{\text{DDR_DQS[3]}}$	DDR interface	Data Strobe for DDR Data Bytes[31:24].
AA8	NC/GND	No connect/GND	For new ADV8003 designs, do not connect to this pin. For designs that must maintain consistency with the ADV8002, this pin can be grounded.
AA9	DDR_A[8]	DDR interface	Address Line. Interface to external RAM address lines.
AA10	DVDD_DDR	Power	DDR Interface Supply (1.8 V).
AA11	DDR_A[2]	DDR interface	Address Line. Interface to external RAM address lines.
AA12	GND	GND	Ground.
AA13	DDR_$\overline{\text{CS}}$	DDR interface	DDR Chip Select. Interface to external DDR RAM chip selects.
AA14	DVDD_DDR	Power	DDR Interface Supply (1.8 V).
AA15	DDR_CK	DDR interface	DDR Memory Clock. Interface to external DDR RAM clock lines.
AA16	GND	GND	Ground.
AA17	DDR_DQ[11]	DDR interface	Data Line. Interface to external RAM data lines.
AA18	DVDD_DDR	Power	DDR Interface Supply (1.8 V).
AA19	DDR_DM[1]	DDR interface	Data Mask for Data Lines[15:8].
AA20	DDR_DM[0]	DDR interface	Data Mask for Data Lines[7:0].
AA21	GND	GND	Ground.
AA22	GND	GND	Ground.
AA23	DDR_DQ[3]	DDR interface	Data Line. Interface to external RAM data lines.
AB1	DDR_DQ[21]	DDR interface	Data Line. Interface to external RAM data lines.
AB2	DDR_DQ[19]	DDR interface	Data Line. Interface to external RAM data lines.
AB3	DDR_DQ[17]	DDR interface	Data Line. Interface to external RAM data lines.
AB4	DDR_DM[2]	DDR interface	Data Mask for Data Lines[23:16].
AB5	DDR_DQ[30]	DDR interface	Data Line. Interface to external RAM data lines.
AB6	DDR_DM[3]	DDR interface	Data Mask for Data Lines[31:25].
AB7	DDR_DQ[31]	DDR interface	Data Line. Interface to external RAM data lines.
AB8	DDR_DQ[29]	DDR interface	Data Line. Interface to external RAM data lines.
AB9	DDR_A[12]	DDR interface	Address Line. Interface to external RAM address lines.
AB10	DDR_A[6]	DDR interface	Address Line. Interface to external RAM address lines.
AB11	DDR_A[3]	DDR interface	Address Line. Interface to external RAM address lines.
AB12	DDR_A[0]	DDR interface	Address Line. Interface to external RAM address lines.
AB13	DDR_BA[0]	DDR interface	Bank Address Line. Indicates which data bank to write/read from.
AB14	$\overline{\text{DDR_RAS}}$	DDR interface	Row Address Strobe for DDR Memory.
AB15	DDR_CKE	DDR interface	Clock Enable for External DDR Memory.
AB16	DDR_DQ[12]	DDR interface	Data Line. Interface to external RAM data lines.
AB17	DDR_DQS[1]	DDR interface	Data Strobe for DDR Data Bytes[15:8].
AB18	DDR_DQ[8]	DDR interface	Data Line. Interface to external RAM data lines.
AB19	DDR_DQ[13]	DDR interface	Data Line. Interface to external RAM data lines.
AB20	DDR_DQ[0]	DDR interface	Data Line. Interface to external RAM data lines.
AB21	DDR_DQ[5]	DDR interface	Data Line. Interface to external RAM data lines.
AB22	DDR_DQS[0]	DDR interface	Data Strobe for DDR Data Bytes[7:0].
AB23	DDR_DQ[4]	DDR interface	Data Line. Interface to external RAM data lines.
AC1	DDR_DQ[16]	DDR interface	Data Line. Interface to external RAM data lines.
AC2	DDR_DQ[20]	DDR interface	Data Line. Interface to external RAM data lines.
AC3	DDR_DQ[22]	DDR interface	Data Line. Interface to external RAM data lines.
AC4	DDR_DQ[25]	DDR interface	Data Line. Interface to external RAM data lines.
AC5	DDR_DQ[28]	DDR interface	Data Line. Interface to external RAM data lines.
AC6	DDR_DQ[27]	DDR interface	Data Line. Interface to external RAM data lines.
AC7	DDR_DQ[24]	DDR interface	Data Line. Interface to external RAM data lines.
AC8	DDR_A[9]	DDR interface	Address Line. Interface to external RAM address lines.
AC9	DDR_A[5]	DDR interface	Address Line. Interface to external RAM address lines.
AC10	DDR_A[7]	DDR interface	Address Line. Interface to external RAM address lines.
AC11	DDR_A[1]	DDR interface	Address Line. Interface to external RAM address lines.
AC12	DDR_A[10]	DDR interface	Address Line. Interface to external RAM address lines.
AC13	DDR_BA[1]	DDR interface	Bank Address Line. Indicates which data bank to write/read from.

Pin No.	Mnemonic	Type	Description
AC14	DDR_BA[2]	DDR interface	Bank Address Line. Indicates which data bank to write/read from.
AC15	DDR_$\overline{WE}$	DDR interface	Write Enable Signal for DDR RAM.
AC16	DDR_VREF	DDR interface[1]	Reference Voltage for DDR RAM.
AC17	DDR_DQ[10]	DDR interface	Data Line. Interface to external RAM data lines.
AC18	$\overline{DDR_DQS}$[1]	DDR interface	Data Strobe for DDR Data Bytes[15:8].
AC19	DDR_DQ[15]	DDR interface	Data Line. Interface to external RAM data lines.
AC20	DDR_DQ[7]	DDR interface	Data Line. Interface to external RAM data lines.
AC21	DDR_DQ[2]	DDR interface	Data Line. Interface to external RAM data lines.
AC22	$\overline{DDR_DQS}$[0]	DDR interface	Data Strobe for DDR Data Bytes[7:0].
AC23	DDR_DQ[1]	DDR interface	Data Line. Interface to external RAM data lines.

[1] Sensitive node. Careful layout is important. Keep the associated circuitry as close as possible to the ADV8003.

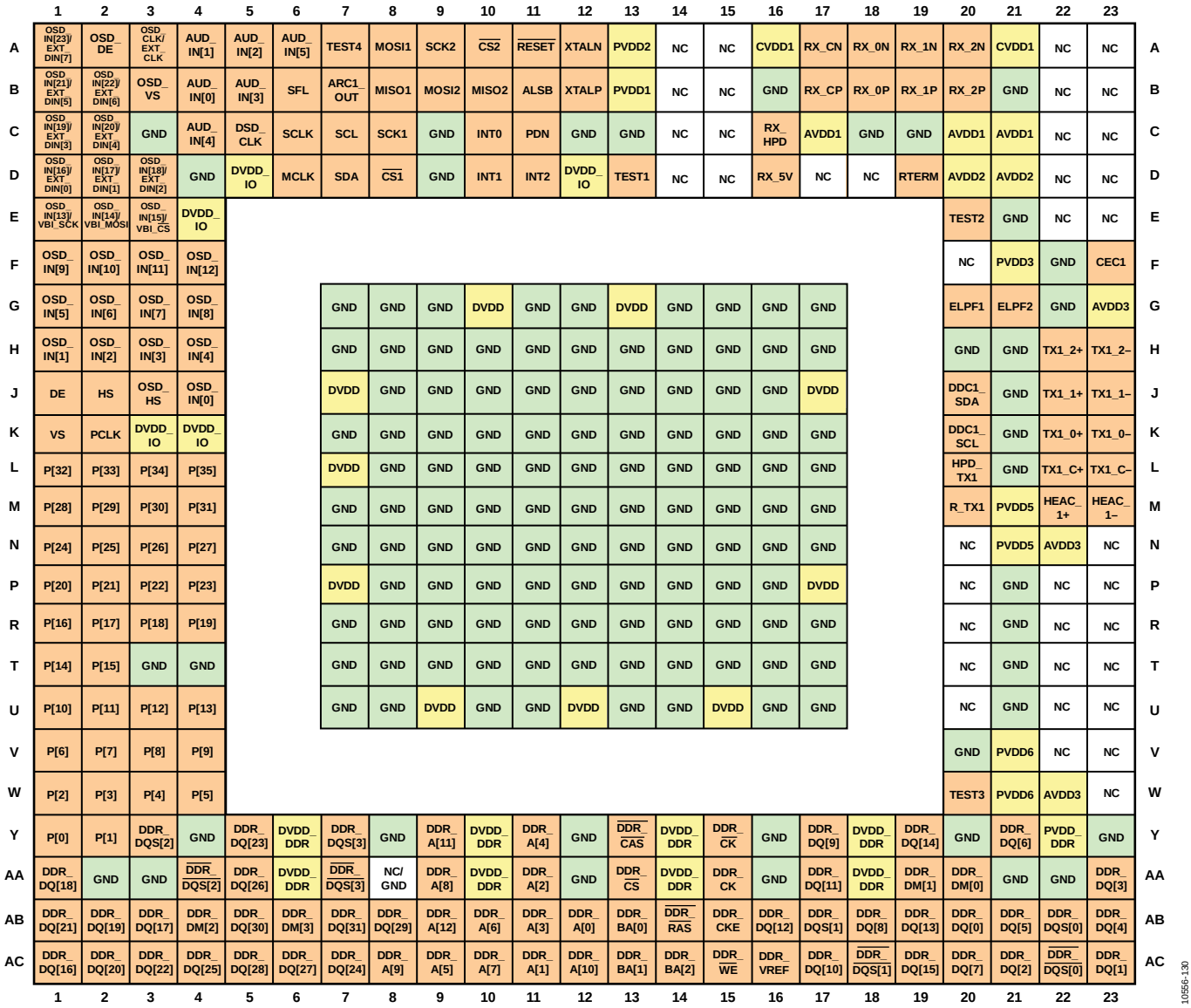

	1	2	3	4	5	6	7	8	9	10	11	12	13	14	15	16	17	18	19	20	21	22	23	
A	OSD_IN[23]/EXT_DIN[7]	OSD_DE	OSD_CLK/EXT_CLK	AUD_IN[1]	AUD_IN[2]	AUD_IN[5]	TEST4	MOSI1	SCK2	$\overline{CS2}$	$\overline{RESET}$	XTALN	PVDD2	NC	NC	CVDD1	RX_CN	RX_0N	RX_1N	RX_2N	CVDD1	NC	NC	A
B	OSD_IN[21]/EXT_DIN[5]	OSD_IN[22]/EXT_DIN[6]	OSD_VS	AUD_IN[0]	AUD_IN[3]	SFL	ARC1_OUT	MISO1	MOSI2	MISO2	ALSB	XTALP	PVDD1	NC	NC	GND	RX_CP	RX_0P	RX_1P	RX_2P	GND	NC	NC	B
C	OSD_IN[19]/EXT_DIN[3]	OSD_IN[20]/EXT_DIN[4]	GND	AUD_IN[4]	DSD_CLK	SCLK	SCL	SCK1	GND	INT0	PDN	GND	GND	NC	NC	RX_HPD	AVDD1	GND	GND	AVDD1	AVDD1	NC	NC	C
D	OSD_IN[16]/EXT_DIN[0]	OSD_IN[17]/EXT_DIN[1]	OSD_IN[18]/EXT_DIN[2]	GND	DVDD_IO	MCLK	SDA	$\overline{CS1}$	GND	INT1	INT2	DVDD_IO	TEST1	NC	NC	RX_5V	NC	NC	RTERM	AVDD2	AVDD2	NC	NC	D
E	OSD_IN[13]/VBI_SCK	OSD_IN[14]/VBI_MOSI	OSD_IN[15]/VBI_CS	DVDD_IO																TEST2	GND	NC	NC	E
F	OSD_IN[9]	OSD_IN[10]	OSD_IN[11]	OSD_IN[12]																NC	PVDD3	GND	CEC1	F
G	OSD_IN[5]	OSD_IN[6]	OSD_IN[7]	OSD_IN[8]			GND	GND	GND	DVDD	GND	GND	DVDD	GND	GND	GND	GND			ELPF1	ELPF2	GND	AVDD3	G
H	OSD_IN[1]	OSD_IN[2]	OSD_IN[3]	OSD_IN[4]			GND	GND	GND	GND	GND	GND	GND	GND	GND	GND	GND			GND	GND	TX1_2+	TX1_2–	H
J	DE	HS	OSD_HS	OSD_IN[0]			DVDD	GND	GND	GND	GND	GND	GND	GND	GND	GND	DVDD			DDC1_SDA	GND	TX1_1+	TX1_1–	J
K	VS	PCLK	DVDD_IO	DVDD_IO			GND	GND	GND	GND	GND	GND	GND	GND	GND	GND	GND			DDC1_SCL	GND	TX1_0+	TX1_0–	K
L	P[32]	P[33]	P[34]	P[35]			DVDD	GND	GND	GND	GND	GND	GND	GND	GND	GND	GND			HPD_TX1	GND	TX1_C+	TX1_C–	L
M	P[28]	P[29]	P[30]	P[31]			GND	GND	GND	GND	GND	GND	GND	GND	GND	GND	GND			R_TX1	PVDD5	HEAC_1+	HEAC_1–	M
N	P[24]	P[25]	P[26]	P[27]			GND	GND	GND	GND	GND	GND	GND	GND	GND	GND	GND			NC	PVDD5	AVDD3	NC	N
P	P[20]	P[21]	P[22]	P[23]			DVDD	GND	GND	GND	GND	GND	GND	GND	GND	GND	DVDD			NC	GND	NC	NC	P
R	P[16]	P[17]	P[18]	P[19]			GND	GND	GND	GND	GND	GND	GND	GND	GND	GND	GND			NC	GND	NC	NC	R
T	P[14]	P[15]	GND	GND			GND	GND	GND	GND	GND	GND	GND	GND	GND	GND	GND			NC	GND	NC	NC	T
U	P[10]	P[11]	P[12]	P[13]			GND	GND	DVDD	GND	GND	DVDD	GND	GND	DVDD	GND	GND			NC	GND	NC	NC	U
V	P[6]	P[7]	P[8]	P[9]																GND	PVDD6	NC	NC	V
W	P[2]	P[3]	P[4]	P[5]																TEST3	PVDD6	AVDD3	NC	W
Y	P[0]	P[1]	DDR_DQS[2]	GND	DDR_DQ[23]	DVDD_DDR	DDR_DQS[3]	GND	DDR_A[11]	DVDD_DDR	DDR_A[4]	GND	$\overline{DDR_CAS}$	DVDD_DDR	$\overline{DDR_CK}$	GND	DDR_DQ[9]	DVDD_DDR	DDR_DQ[14]	GND	DDR_DQ[6]	PVDD_DDR	GND	Y
AA	DDR_DQ[18]	GND	GND	$\overline{DDR_DQS[2]}$	DDR_DQ[26]	DVDD_DDR	$\overline{DDR_DQS[3]}$	NC/GND	DDR_A[8]	DVDD_DDR	DDR_A[2]	GND	$\overline{DDR_CS}$	DVDD_DDR	DDR_CK	GND	DDR_DQ[11]	DVDD_DDR	DDR_DM[1]	DDR_DM[0]	GND	GND	DDR_DQ[3]	AA
AB	DDR_DQ[21]	DDR_DQ[19]	DDR_DQ[17]	DDR_DM[2]	DDR_DQ[30]	DDR_DM[3]	DDR_DQ[31]	DDR_DQ[29]	DDR_A[12]	DDR_A[6]	DDR_A[3]	DDR_A[0]	DDR_BA[0]	$\overline{DDR_RAS}$	DDR_CKE	DDR_DQ[12]	DDR_DQS[1]	DDR_DQ[8]	DDR_DQ[13]	DDR_DQ[0]	DDR_DQ[5]	DDR_DQS[0]	DDR_DQ[4]	AB
AC	DDR_DQ[16]	DDR_DQ[20]	DDR_DQ[22]	DDR_DQ[25]	DDR_DQ[28]	DDR_DQ[27]	DDR_DQ[24]	DDR_A[9]	DDR_A[5]	DDR_A[7]	DDR_A[1]	DDR_A[10]	DDR_BA[1]	DDR_BA[2]	$\overline{DDR_WE}$	DDR_VREF	DDR_DQ[10]	$\overline{DDR_DQS[1]}$	DDR_DQ[15]	DDR_DQ[7]	DDR_DQ[2]	$\overline{DDR_DQS[0]}$	DDR_DQ[1]	AC
	1	2	3	4	5	6	7	8	9	10	11	12	13	14	15	16	17	18	19	20	21	22	23	

10566-130

Figure 30. ADV8003KBCZ-8B and ADV8003KBCZ-7B Pin Configuration

Table 7. ADV8003KBCZ-8B and ADV8003KBCZ-7B Pin Function Descriptions

Pin No.	Mnemonic	Type	Description
A1	OSD_IN[23]/EXT_DIN[7]	OSD video input/ miscellaneous digital	External OSD Video Pixel Input Port (OSD_IN[23])/Additional TTL Input for External CCIR 656 Video Data (EXT_DIN[7]).
A2	OSD_DE	OSD video sync	Data Enable for the OSD Input Port.
A3	OSD_CLK/EXT_CLK	OSD video sync	Pixel Clock for the OSD Input Port (OSD_CLK)/Pixel Clock for External Video Data (EXT_CLK).
A4	AUD_IN[1]	Audio input	I²S0/DSD1 Audio Input.
A5	AUD_IN[2]	Audio input	I²S1/DSD2 Audio Input.
A6	AUD_IN[5]	Audio input	LRCLK/DSD5 Audio Input.
A7	TEST4	Miscellaneous digital	Test Pin. Connect this pin to ground through a 4.7 kΩ resistor.
A8	MOSI1	Serial port control	Master Out Slave In (Serial Port 1). Serial Port 1 is used for OSD control.
A9	SCK2	Serial port control	Serial Clock (Serial Port 2). Serial Port 2 is used for the external flash ROM.
A10	$\overline{CS2}$	Serial port control	Chip Select (Serial Port 2). Serial Port 2 is used for the external flash ROM.
A11	$\overline{RESET}$	Miscellaneous digital	Reset Pin.
A12	XTALN	Miscellaneous digital[1]	Crystal Input.
A13	PVDD2	Power	PLL Digital Supply Voltage (1.8 V).
A14	NC	N/A	No Connect. Do not connect to this pin.
A15	NC	N/A	No Connect. Do not connect to this pin.
A16	CVDD1	Power	Comparator Supply Voltage (1.8 V).
A17	RX_CN	Rx input	Rx Clock Complement Input.
A18	RX_0N	Rx input	Rx Channel 0 Complement Input.
A19	RX_1N	Rx input	Rx Channel 1 Complement Input.
A20	RX_2N	Rx input	Rx Channel 2 Complement Input.
A21	CVDD1	Power	Comparator Supply Voltage (1.8 V).
A22	NC	N/A	No Connect. Do not connect to this pin.
A23	NC	N/A	No Connect. Do not connect to this pin.
B1	OSD_IN[21]/EXT_DIN[5]	OSD video input/ miscellaneous digital	External OSD Video Pixel Input Port (OSD_IN[21])/Additional TTL Input for External CCIR 656 Video Data (EXT_DIN[5]).
B2	OSD_IN[22]/EXT_DIN[6]	OSD video input/ miscellaneous digital	External OSD Video Pixel Input Port (OSD_IN[22])/Additional TTL Input for External CCIR 656 Video Data (EXT_DIN[6]).
B3	OSD_VS	OSD video sync	Vertical Sync for the OSD Input Port.
B4	AUD_IN[0]	Audio input	S/PDIF or DSD0 Audio Input.
B5	AUD_IN[3]	Audio input	I²S2/DSD3 Audio Input.
B6	SFL	SFL	Subcarrier Frequency Lock Signal (SFL).
B7	ARC1_OUT	Audio output	Audio Return Channel for HDMI Tx1.
B8	MISO1	Serial port control	Master In Slave Out (Serial Port 1). Serial Port 1 is used for OSD control.
B9	MOSI2	Serial port control	Master Out Slave In (Serial Port 2). Serial Port 2 is used for the external flash ROM.
B10	MISO2	Serial port control	Master In Slave Out (Serial Port 2). Serial Port 2 is used for the external flash ROM.
B11	ALSB	I²C control	Sets LSB of I²C address. When the ALSB pin is set low, the I²C address is 0x18; when the ALSB pin is set high, the I²C address is 0x1A.
B12	XTALP	Miscellaneous digital[1]	Crystal Input.
B13	PVDD1	Power	PLL Analog Supply Voltage (1.8 V).
B14	NC	N/A	No Connect. Do not connect to this pin.
B15	NC	N/A	No Connect. Do not connect to this pin.
B16	GND	GND	Ground.
B17	RX_CP	Rx input	Rx Clock True Input.
B18	RX_0P	Rx input	Rx Channel 0 True Input.
B19	RX_1P	Rx input	Rx Channel 1 True Input.
B20	RX_2P	Rx input	Rx Channel 2 True Input.
B21	GND	GND	Ground.
B22	NC	N/A	No Connect. Do not connect to this pin.
B23	NC	N/A	No Connect. Do not connect to this pin.

Pin No.	Mnemonic	Type	Description
C1	OSD_IN[19]/EXT_DIN[3]	OSD video input/ miscellaneous digital	External OSD Video Pixel Input Port (OSD_IN[19])/Additional TTL Input for External CCIR 656 Video Data (EXT_DIN[3]).
C2	OSD_IN[20]/EXT_DIN[4]	OSD video input/ miscellaneous digital	External OSD Video Pixel Input Port (OSD_IN[20])/Additional TTL Input for External CCIR 656 Video Data (EXT_DIN[4]).
C3	GND	GND	Ground.
C4	AUD_IN[4]	Audio input	I²S3/DSD4 Audio Input.
C5	DSD_CLK	Audio input	DSD Audio Clock Input.
C6	SCLK	Audio input	I²S Bit Clock Input.
C7	SCL	I²C control	I²C Clock Input. This pin is open drain; use a 4.7 kΩ resistor to connect this pin to a 3.3 V supply.
C8	SCK1	Serial port control	Serial Clock (Serial Port 1). Serial Port 1 is used for OSD control.
C9	GND	GND	Ground.
C10	INT0	Miscellaneous digital	Interrupt Pin 0. When status bits change, this pin is triggered.
C11	PDN	Miscellaneous digital	Power-Down. This pin controls the power state of the ADV8003.
C12	GND	GND	Ground.
C13	GND	GND	Ground.
C14	NC	N/A	No Connect. Do not connect to this pin.
C15	NC	N/A	No Connect. Do not connect to this pin.
C16	RX_HPD	Rx input	Hot Plug Assert Signal Output for the Rx Input.
C17	AVDD1	Power	HDMI Rx Inputs Analog Supply (3.3 V).
C18	GND	GND	Ground.
C19	GND	GND	Ground.
C20	AVDD1	Power	HDMI Rx Inputs, Analog Supply (3.3 V).
C21	AVDD1	Power	HDMI Rx Inputs, Analog Supply (3.3 V).
C22	NC	N/A	No Connect. Do not connect to this pin.
C23	NC	N/A	No Connect. Do not connect to this pin.
D1	OSD_IN[16]/EXT_DIN[0]	OSD video input/ miscellaneous digital	External OSD Video Pixel Input Port (OSD_IN[16])/Additional TTL Input for External CCIR 656 Video Data (EXT_DIN[0]).
D2	OSD_IN[17]/EXT_DIN[1]	OSD video input/ miscellaneous digital	External OSD Video Pixel Input Port (OSD_IN[17])/Additional TTL Input for External CCIR 656 Video Data (EXT_DIN[1]).
D3	OSD_IN[18]/EXT_DIN[2]	OSD video input/ miscellaneous digital	External OSD Video Pixel Input Port (OSD_IN[18])/Additional TTL Input for External CCIR 656 Video Data (EXT_DIN[2]).
D4	GND	GND	Ground.
D5	DVDD_IO	Power	Digital Interface Supply (3.3 V).
D6	MCLK	Audio input	MCLK for S/PDIF Input Audio.
D7	SDA	I²C control	I²C Data Input. This pin is open drain; use a 4.7 kΩ resistor to connect this pin to a 3.3 V supply.
D8	$\overline{CS1}$	Serial port control	Chip Select (Serial Port 1). Serial Port 1 is used for OSD control.
D9	GND	GND	Ground.
D10	INT1	Miscellaneous digital	Interrupt Pin for HDMI Transmitter Outputs. When status bits change, an interrupt is generated on this pin.
D11	INT2	Miscellaneous digital	Interrupt Pin for HDMI Receiver Input Lines. When status bits change, an interrupt is generated on this pin.
D12	DVDD_IO	Power	Digital Interface Supply (3.3 V).
D13	TEST1	Miscellaneous digital	Test Pin. Float this pin.
D14	NC	N/A	No Connect. Do not connect to this pin.
D15	NC	N/A	No Connect. Do not connect to this pin.
D16	RX_5V	Rx input	5 V Detect Pin for the Rx Input.
D17	NC	N/A	No Connect. Do not connect to this pin.
D18	NC	N/A	No Connect. Do not connect to this pin.
D19	RTERM	HDMI Rx input	This pin sets internal termination resistance. Use a 500 Ω resistor between this pin and GND. Place the RTERM resistor as close as possible to the ADV8003.
D20	AVDD2	Power	Analog Power Supply (3.3 V).
D21	AVDD2	Power	Analog Power Supply (3.3 V).
D22	NC	N/A	No Connect. Do not connect to this pin.
D23	NC	N/A	No Connect. Do not connect to this pin.

Pin No.	Mnemonic	Type	Description
E1	OSD_IN[13]/VBI_SCK	OSD video input/ miscellaneous digital	External OSD Video Pixel Input Port (OSD_IN[13])/Serial Clock for VBI Data Serial Port (VBI_SCK).
E2	OSD_IN[14]/VBI_MOSI	OSD video input/ miscellaneous digital	External OSD Video Pixel Input Port (OSD_IN[14])/Master Out Slave In for VBI Data Serial Port (VBI_MOSI).
E3	OSD_IN[15]/VBI_$\overline{CS}$	OSD video input/ miscellaneous digital	External OSD Video Pixel Input Port (OSD_IN[15])/Chip Select for VBI Data Serial Port (VBI_$\overline{CS}$).
E4	DVDD_IO	Power	Digital Interface Supply (3.3 V).
E20	TEST2	Miscellaneous analog	Test Pin. Float this pin.
E21	GND	GND	Ground.
E22	NC	N/A	No Connect. Do not connect to this pin.
E23	NC	N/A	No Connect. Do not connect to this pin.
F1	OSD_IN[9]	OSD video input	External OSD Video Pixel Input Port (OSD_IN[9]).
F2	OSD_IN[10]	OSD video input	External OSD Video Pixel Input Port (OSD_IN[10]).
F3	OSD_IN[11]	OSD video input	External OSD Video Pixel Input Port (OSD_IN[11]).
F4	OSD_IN[12]	OSD video input/ miscellaneous digital	External OSD Video Pixel Input Port (OSD_IN[12]).
F20	NC	N/A	No Connect. Do not connect to this pin.
F21	PVDD3	Power	PLL Supply (1.8 V).
F22	GND	GND	Ground.
F23	CEC1	HDMI Tx1	HDMI Tx1 Consumer Electronics Control (CEC).
G1	OSD_IN[5]	OSD video input	External OSD Video Pixel Input Port (OSD_IN[5]).
G2	OSD_IN[6]	OSD video input	External OSD Video Pixel Input Port (OSD_IN[6]).
G3	OSD_IN[7]	OSD video input	External OSD Video Pixel Input Port (OSD_IN[7]).
G4	OSD_IN[8]	OSD video input	External OSD Video Pixel Input Port (OSD_IN[8]).
G7	GND	GND	Ground.
G8	GND	GND	Ground.
G9	GND	GND	Ground.
G10	DVDD	Power	Digital Power Supply (1.8 V).
G11	GND	GND	Ground.
G12	GND	GND	Ground.
G13	DVDD	Power	Digital Power Supply (1.8 V).
G14	GND	GND	Ground.
G15	GND	GND	Ground.
G16	GND	GND	Ground.
G17	GND	GND	Ground.
G20	ELPF1	Miscellaneous analog[1]	External Loop Filter for PLL 1. Connect to PVDD3.
G21	ELPF2	Miscellaneous analog[1]	External Loop Filter for PLL 2. Connect to PVDD3.
G22	GND	GND	Ground.
G23	AVDD3	Power	HDMI Analog Power Supply (1.8 V).
H1	OSD_IN[1]	OSD video input	External OSD Video Pixel Input Port (OSD_IN[1]).
H2	OSD_IN[2]	OSD video input	External OSD Video Pixel Input Port (OSD_IN[2]).
H3	OSD_IN[3]	OSD video input	External OSD Video Pixel Input Port (OSD_IN[3]).
H4	OSD_IN[4]	OSD video input	External OSD Video Pixel Input Port (OSD_IN[4]).
H7	GND	GND	Ground.
H8	GND	GND	Ground.
H9	GND	GND	Ground.
H10	GND	GND	Ground.
H11	GND	GND	Ground.
H12	GND	GND	Ground.
H13	GND	GND	Ground.
H14	GND	GND	Ground.
H15	GND	GND	Ground.
H16	GND	GND	Ground.
H17	GND	GND	Ground.
H20	GND	GND	Ground.
H21	GND	GND	Ground.

Pin No.	Mnemonic	Type	Description
H22	TX1_2+	HDMI Tx1	HDMI1 Channel 2 True Output.
H23	TX1_2−	HDMI Tx1	HDMI1 Channel 2 Complementary Output.
J1	DE	Digital video sync	Data Enable for Digital Input Video.
J2	HS	Digital video sync	Horizontal Sync for Digital Input Video.
J3	OSD_HS	Digital video sync	Horizontal Sync for the OSD Input Port (OSD_HS).
J4	OSD_IN[0]	OSD video input	External OSD Video Pixel Input Port (OSD_IN[0]).
J7	DVDD	Power	Digital Power Supply (1.8 V).
J8	GND	GND	Ground.
J9	GND	GND	Ground.
J10	GND	GND	Ground.
J11	GND	GND	Ground.
J12	GND	GND	Ground.
J13	GND	GND	Ground.
J14	GND	GND	Ground.
J15	GND	GND	Ground.
J16	GND	GND	Ground.
J17	DVDD	Power	Digital Power Supply (1.8 V).
J20	DDC1_SDA	HDMI Tx1	HDCP Slave Serial Data for HDMI Tx1. This pin is open drain; use a 2 kΩ resistor to connect this pin to the HDMI Tx 5 V supply.
J21	GND	GND	Ground.
J22	TX1_1+	HDMI Tx1	HDMI1 Channel 1 True Output.
J23	TX1_1−	HDMI Tx1	HDMI1 Channel 1 Complementary Output.
K1	VS	Digital video sync	Vertical Sync for Digital Input Video.
K2	PCLK	Digital video sync	Pixel Clock for Digital Input Video.
K3	DVDD_IO	Power	Digital Interface Supply (3.3 V).
K4	DVDD_IO	Power	Digital Interface Supply (3.3 V).
K7	GND	GND	Ground.
K8	GND	GND	Ground.
K9	GND	GND	Ground.
K10	GND	GND	Ground.
K11	GND	GND	Ground.
K12	GND	GND	Ground.
K13	GND	GND	Ground.
K14	GND	GND	Ground.
K15	GND	GND	Ground.
K16	GND	GND	Ground.
K17	GND	GND	Ground.
K20	DDC1_SCL	HDMI Tx1	HDCP Slave Serial Clock for HDMI Tx1. This pin is open drain; use a 2 kΩ resistor to connect this pin to the HDMI Tx 5 V supply.
K21	GND	GND	Ground.
K22	TX1_0+	HDMI Tx1	HDMI1 Channel 0 True Output.
K23	TX1_0−	HDMI Tx1	HDMI1 Channel 0 Complementary Output.
L1	P[32]	Digital video input	Digital Video Input Bus[35:0].
L2	P[33]	Digital video input	Digital Video Input Bus[35:0].
L3	P[34]	Digital video input	Digital Video Input Bus[35:0].
L4	P[35]	Digital video input	Digital Video Input Bus[35:0].
L7	DVDD	Power	Digital Power Supply (1.8 V).
L8	GND	GND	Ground.
L9	GND	GND	Ground.
L10	GND	GND	Ground.
L11	GND	GND	Ground.
L12	GND	GND	Ground.
L13	GND	GND	Ground.
L14	GND	GND	Ground.
L15	GND	GND	Ground.

Pin No.	Mnemonic	Type	Description
L16	GND	GND	Ground.
L17	GND	GND	Ground.
L20	HPD_TX1	HDMI Tx1	Hot Plug Assert Signal Input for HDMI Tx1.
L21	GND	GND	Ground.
L22	TX1_C+	HDMI Tx1	HDMI1 Clock True Output.
L23	TX1_C–	HDMI Tx1	HDMI1 Clock Complementary Output.
M1	P[28]	Digital video input	Digital Video Input Bus[35:0].
M2	P[29]	Digital video input	Digital Video Input Bus[35:0].
M3	P[30]	Digital video input	Digital Video Input Bus[35:0].
M4	P[31]	Digital video input	Digital Video Input Bus[35:0].
M7	GND	GND	Ground.
M8	GND	GND	Ground.
M9	GND	GND	Ground.
M10	GND	GND	Ground.
M11	GND	GND	Ground.
M12	GND	GND	Ground.
M13	GND	GND	Ground.
M14	GND	GND	Ground.
M15	GND	GND	Ground.
M16	GND	GND	Ground.
M17	GND	GND	Ground.
M20	R_TX1	HDMI Tx1[1]	Sets internal reference currents. Place a 470 Ω resistor (1% tolerance) between this pin and ground, as close as possible to the ADV8003.
M21	PVDD5	Power[1]	HDMI Tx PLL Power Supply (1.8 V).
M22	HEAC_1+	HDMI Tx1	HDMI Tx1 HEAC+ from HDMI Connector.
M23	HEAC_1–	HDMI Tx1	HDMI Tx1 HEAC– from HDMI Connector.
N1	P[24]	Digital video input	Digital Video Input Bus[35:0].
N2	P[25]	Digital video input	Digital Video Input Bus[35:0].
N3	P[26]	Digital video input	Digital Video Input Bus[35:0].
N4	P[27]	Digital video input	Digital Video Input Bus[35:0].
N7	GND	GND	Ground.
N8	GND	GND	Ground.
N9	GND	GND	Ground.
N10	GND	GND	Ground.
N11	GND	GND	Ground.
N12	GND	GND	Ground.
N13	GND	GND	Ground.
N14	GND	GND	Ground.
N15	GND	GND	Ground.
N16	GND	GND	Ground.
N17	GND	GND	Ground.
N20	NC	N/A	No Connect. Do not connect to this pin.
N21	PVDD5	Power[1]	HDMI Tx PLL Power Supply (1.8 V).
N22	AVDD3	Power	HDMI Analog Power Supply (1.8 V).
N23	NC	N/A	No Connect. Do not connect to this pin.
P1	P[20]	Digital video input	Digital Video Input Bus[35:0].
P2	P[21]	Digital video input	Digital Video Input Bus[35:0].
P3	P[22]	Digital video input	Digital Video Input Bus[35:0].
P4	P[23]	Digital video input	Digital Video Input Bus[35:0].
P7	DVDD	Power	Digital Power Supply (1.8 V).
P8	GND	GND	Ground.
P9	GND	GND	Ground.
P10	GND	GND	Ground.
P11	GND	GND	Ground.
P12	GND	GND	Ground.

Pin No.	Mnemonic	Type	Description
P13	GND	GND	Ground.
P14	GND	GND	Ground.
P15	GND	GND	Ground.
P16	GND	GND	Ground.
P17	DVDD	Power	Digital Power Supply (1.8 V).
P20	NC	N/A	No Connect. Do not connect to this pin.
P21	GND	GND	Ground.
P22	NC	N/A	No Connect. Do not connect to this pin.
P23	NC	N/A	No Connect. Do not connect to this pin.
R1	P[16]	Digital video input	Digital Video Input Bus[35:0].
R2	P[17]	Digital video input	Digital Video Input Bus[35:0].
R3	P[18]	Digital video input	Digital Video Input Bus[35:0].
R4	P[19]	Digital video input	Digital Video Input Bus[35:0].
R7	GND	GND	Ground.
R8	GND	GND	Ground.
R9	GND	GND	Ground.
R10	GND	GND	Ground.
R11	GND	GND	Ground.
R12	GND	GND	Ground.
R13	GND	GND	Ground.
R14	GND	GND	Ground.
R15	GND	GND	Ground.
R16	GND	GND	Ground.
R17	GND	GND	Ground.
R20	NC	N/A	No Connect. Do not connect to this pin.
R21	GND	GND	Ground.
R22	NC	N/A	No Connect. Do not connect to this pin.
R23	NC	N/A	No Connect. Do not connect to this pin.
T1	P[14]	Digital video input	Digital Video Input Bus[35:0].
T2	P[15]	Digital video input	Digital Video Input Bus[35:0].
T3	GND	GND	Ground.
T4	GND	GND	Ground.
T7	GND	GND	Ground.
T8	GND	GND	Ground.
T9	GND	GND	Ground.
T10	GND	GND	Ground.
T11	GND	GND	Ground.
T12	GND	GND	Ground.
T13	GND	GND	Ground.
T14	GND	GND	Ground.
T15	GND	GND	Ground.
T16	GND	GND	Ground.
T17	GND	GND	Ground.
T20	NC	N/A	No Connect. Do not connect to this pin.
T21	GND	GND	Ground.
T22	NC	N/A	No Connect. Do not connect to this pin.
T23	NC	N/A	No Connect. Do not connect to this pin.
U1	P[10]	Digital video input	Digital Video Input Bus[35:0].
U2	P[11]	Digital video input	Digital Video Input Bus[35:0].
U3	P[12]	Digital video input	Digital Video Input Bus[35:0].
U4	P[13]	Digital video input	Digital Video Input Bus[35:0].
U7	GND	GND	Ground.
U8	GND	GND	Ground.
U9	DVDD	Power	Digital Power Supply (1.8 V).
U10	GND	GND	Ground.

Pin No.	Mnemonic	Type	Description
U11	GND	GND	Ground.
U12	DVDD	Power	Digital Power Supply (1.8 V).
U13	GND	GND	Ground.
U14	GND	GND	Ground.
U15	DVDD	Power	Digital Power Supply (1.8 V).
U16	GND	GND	Ground.
U17	GND	GND	Ground.
U20	NC	N/A	No Connect. Do not connect to this pin.
U21	GND	GND	Ground.
U22	NC	N/A	No Connect. Do not connect to this pin.
U23	NC	N/A	No Connect. Do not connect to this pin.
V1	P[6]	Digital video input	Digital Video Input Bus[35:0].
V2	P[7]	Digital video input	Digital Video Input Bus[35:0].
V3	P[8]	Digital video input	Digital Video Input Bus[35:0].
V4	P[9]	Digital video input	Digital Video Input Bus[35:0].
V20	GND	GND	Ground.
V21	PVDD6	Power[1]	HDMI Tx PLL Power Supply (1.8 V).
V22	NC	N/A	No Connect. Do not connect to this pin.
V23	NC	N/A	No Connect. Do not connect to this pin.
W1	P[2]	Digital video input	Digital Video Input Bus[35:0].
W2	P[3]	Digital video input	Digital Video Input Bus[35:0].
W3	P[4]	Digital video input	Digital Video Input Bus[35:0].
W4	P[5]	Digital video input	Digital Video Input Bus[35:0].
W20	TEST3	Miscellaneous digital	Test Pin. Connect this pin to ground through a 0.1 µF capacitor.
W21	PVDD6	Power[1]	HDMI Tx PLL Power Supply (1.8 V).
W22	AVDD3	Power	HDMI Analog Power Supply (1.8 V).
W23	NC	N/A	No Connect. Do not connect to this pin.
Y1	P[0]	Digital video input	Digital Video Input Bus[35:0].
Y2	P[1]	Digital video input	Digital Video Input Bus[35:0].
Y3	DDR_DQS[2]	DDR interface	Data Strobe for DDR Data Bytes[23:16].
Y4	GND	GND	Ground.
Y5	DDR_DQ[23]	DDR interface	Data Line. Interface to external RAM data lines.
Y6	DVDD_DDR	Power	DDR Interface Supply (1.8 V).
Y7	DDR_DQS[3]	DDR interface	Data Strobe for DDR Data Bytes[31:24].
Y8	GND	GND	Ground.
Y9	DDR_A[11]	DDR interface	Address Line. Interface to external RAM address lines.
Y10	DVDD_DDR	Power	DDR Interface Supply (1.8 V).
Y11	DDR_A[4]	DDR interface	Address Line. Interface to external RAM address lines.
Y12	GND	GND	Ground.
Y13	$\overline{\text{DDR_CAS}}$	DDR interface	Column Address Strobe for DDR Memory.
Y14	DVDD_DDR	Power	DDR Interface Supply (1.8 V).
Y15	DDR_$\overline{\text{CK}}$	DDR interface	DDR Memory Clock. Interface to external DDR RAM clock lines.
Y16	GND	GND	Ground.
Y17	DDR_DQ[9]	DDR Interface	Data Line. Interface to external RAM data lines.
Y18	DVDD_DDR	Power	DDR Interface Supply (1.8 V).
Y19	DDR_DQ[14]	DDR interface	Data Line. Interface to external RAM data lines.
Y20	GND	GND	Ground.
Y21	DDR_DQ[6]	DDR interface	Data Line. Interface to external RAM data lines.
Y22	PVDD_DDR	Power	DDR Interface PLL Supply (1.8 V).
Y23	GND	GND	Ground.
AA1	DDR_DQ[18]	DDR interface	Data Line. Interface to external RAM data lines.
AA2	GND	GND	Ground.
AA3	GND	GND	Ground.
AA4	$\overline{\text{DDR_DQS[2]}}$	DDR interface	Data Strobe for DDR Data Bytes[23:16].
AA5	DDR_DQ[26]	DDR interface	Data Line. Interface to external RAM data lines.

Pin No.	Mnemonic	Type	Description
AA6	DVDD_DDR	Power	DDR Interface Supply (1.8 V).
AA7	$\overline{\text{DDR_DQS[3]}}$	DDR interface	Data Strobe for DDR Data Bytes[31:24].
AA8	NC/GND	No connect/GND	For new ADV8003 designs, do not connect to this pin. For designs that must maintain consistency with the ADV8002, this pin can be grounded.
AA9	DDR_A[8]	DDR interface	Address Line. Interface to external RAM address lines.
AA10	DVDD_DDR	Power	DDR Interface Supply (1.8 V).
AA11	DDR_A[2]	DDR interface	Address Line. Interface to external RAM address lines.
AA12	GND	GND	Ground.
AA13	DDR_$\overline{\text{CS}}$	DDR interface	DDR Chip Select. Interface to external DDR RAM chip selects.
AA14	DVDD_DDR	Power	DDR Interface Supply (1.8 V).
AA15	DDR_CK	DDR interface	DDR Memory Clock. Interface to external DDR RAM clock lines.
AA16	GND	GND	Ground.
AA17	DDR_DQ[11]	DDR interface	Data Line. Interface to external RAM data lines.
AA18	DVDD_DDR	Power	DDR Interface Supply (1.8 V).
AA19	DDR_DM[1]	DDR interface	Data Mask for Data Lines[15:8].
AA20	DDR_DM[0]	DDR interface	Data Mask for Data Lines[7:0].
AA21	GND	GND	Ground.
AA22	GND	GND	Ground.
AA23	DDR_DQ[3]	DDR interface	Data Line. Interface to external RAM data lines.
AB1	DDR_DQ[21]	DDR interface	Data Line. Interface to external RAM data lines.
AB2	DDR_DQ[19]	DDR interface	Data Line. Interface to external RAM data lines.
AB3	DDR_DQ[17]	DDR interface	Data Line. Interface to external RAM data lines.
AB4	DDR_DM[2]	DDR interface	Data Mask for Data Lines[23:16].
AB5	DDR_DQ[30]	DDR interface	Data Line. Interface to external RAM data lines.
AB6	DDR_DM[3]	DDR interface	Data Mask for Data Lines[31:25].
AB7	DDR_DQ[31]	DDR interface	Data Line. Interface to external RAM data lines.
AB8	DDR_DQ[29]	DDR interface	Data Line. Interface to external RAM data lines.
AB9	DDR_A[12]	DDR interface	Address Line. Interface to external RAM address lines.
AB10	DDR_A[6]	DDR interface	Address Line. Interface to external RAM address lines.
AB11	DDR_A[3]	DDR interface	Address Line. Interface to external RAM address lines.
AB12	DDR_A[0]	DDR interface	Address Line. Interface to external RAM address lines.
AB13	DDR_BA[0]	DDR interface	Bank Address Line. Indicates which data bank to write/read from.
AB14	$\overline{\text{DDR_RAS}}$	DDR interface	Row Address Strobe for DDR Memory.
AB15	DDR_CKE	DDR interface	Clock Enable for External DDR Memory.
AB16	DDR_DQ[12]	DDR interface	Data Line. Interface to external RAM data lines.
AB17	DDR_DQS[1]	DDR interface	Data Strobe for DDR Data Bytes[15:8].
AB18	DDR_DQ[8]	DDR interface	Data Line. Interface to external RAM data lines.
AB19	DDR_DQ[13]	DDR interface	Data Line. Interface to external RAM data lines.
AB20	DDR_DQ[0]	DDR interface	Data Line. Interface to external RAM data lines.
AB21	DDR_DQ[5]	DDR interface	Data Line. Interface to external RAM data lines.
AB22	DDR_DQS[0]	DDR interface	Data Strobe for DDR Data Bytes[7:0].
AB23	DDR_DQ[4]	DDR interface	Data Line. Interface to external RAM data lines.
AC1	DDR_DQ[16]	DDR interface	Data Line. Interface to external RAM data lines.
AC2	DDR_DQ[20]	DDR interface	Data Line. Interface to external RAM data lines.
AC3	DDR_DQ[22]	DDR interface	Data Line. Interface to external RAM data lines.
AC4	DDR_DQ[25]	DDR interface	Data Line. Interface to external RAM data lines.
AC5	DDR_DQ[28]	DDR interface	Data Line. Interface to external RAM data lines.
AC6	DDR_DQ[27]	DDR interface	Data Line. Interface to external RAM data lines.
AC7	DDR_DQ[24]	DDR interface	Data Line. Interface to external RAM data lines.
AC8	DDR_A[9]	DDR interface	Address Line. Interface to external RAM address lines.
AC9	DDR_A[5]	DDR interface	Address Line. Interface to external RAM address lines.
AC10	DDR_A[7]	DDR interface	Address Line. Interface to external RAM address lines.
AC11	DDR_A[1]	DDR interface	Address Line. Interface to external RAM address lines.
AC12	DDR_A[10]	DDR interface	Address Line. Interface to external RAM address lines.
AC13	DDR_BA[1]	DDR interface	Bank Address Line. Indicates which data bank to write/read from.

Pin No.	Mnemonic	Type	Description
AC14	DDR_BA[2]	DDR interface	Bank Address Line. Indicates which data bank to write/read from.
AC15	DDR_$\overline{WE}$	DDR interface	Write Enable Signal for DDR RAM.
AC16	DDR_VREF	DDR interface[1]	Reference Voltage for DDR RAM.
AC17	DDR_DQ[10]	DDR interface	Data Line. Interface to external RAM data lines.
AC18	$\overline{DDR_DQS[1]}$	DDR interface	Data Strobe for DDR Data Bytes[15:8].
AC19	DDR_DQ[15]	DDR interface	Data Line. Interface to external RAM data lines.
AC20	DDR_DQ[7]	DDR interface	Data Line. Interface to external RAM data lines.
AC21	DDR_DQ[2]	DDR interface	Data Line. Interface to external RAM data lines.
AC22	$\overline{DDR_DQS[0]}$	DDR interface	Data Strobe for DDR Data Bytes[7:0].
AC23	DDR_DQ[1]	DDR interface	Data Line. Interface to external RAM data lines.

[1] Sensitive node. Careful layout is important. Keep the associated circuitry as close as possible to the ADV8003.

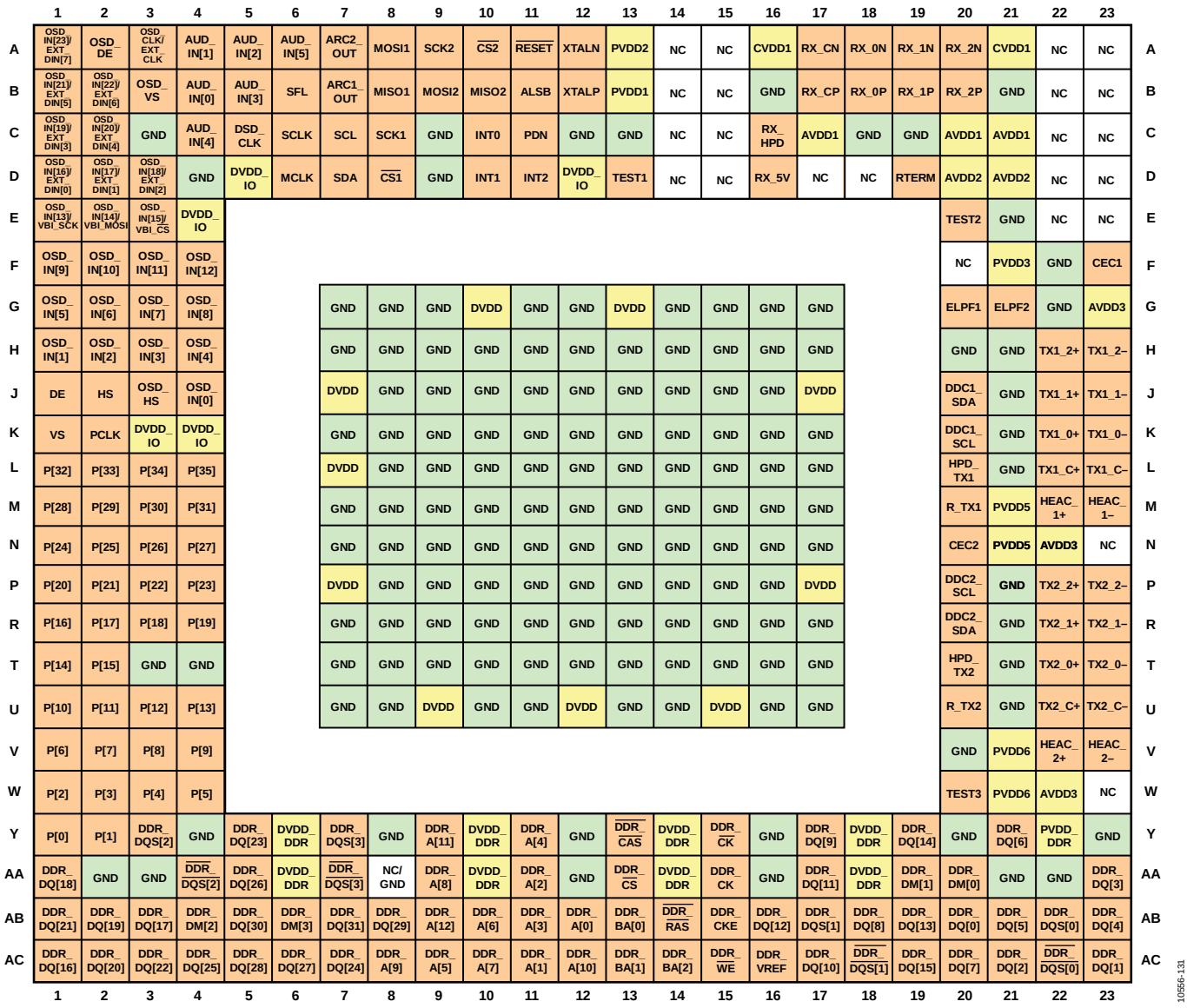

Figure 31. ADV8003KBCZ-8C and ADV8003KBCZ-7C Pin Configuration

Table 8. ADV8003KBCZ-8C and ADV8003KBCZ-7C Pin Function Descriptions

Pin No.	Mnemonic	Type	Description
A1	OSD_IN[23]/EXT_DIN[7]	OSD video input/ miscellaneous digital	External OSD Video Pixel Input Port (OSD_IN[23])/Additional TTL Input for External CCIR 656 Video Data (EXT_DIN[7]).
A2	OSD_DE	OSD video sync	Data Enable for the OSD Input Port.
A3	OSD_CLK/EXT_CLK	OSD video sync	Pixel Clock for the OSD Input Port (OSD_CLK)/Pixel Clock for External Video Data (EXT_CLK).
A4	AUD_IN[1]	Audio input	I^2S0/DSD1 Audio Input.
A5	AUD_IN[2]	Audio input	I^2S1/DSD2 Audio Input.
A6	AUD_IN[5]	Audio input	LRCLK/DSD5 Audio Input.
A7	ARC2_OUT	Audio output	Audio Return Channel for HDMI Tx2.
A8	MOSI1	Serial port control	Master Out Slave In (Serial Port 1). Serial Port 1 is used for OSD control.
A9	SCK2	Serial port control	Serial Clock (Serial Port 2). Serial Port 2 is used for the external flash ROM.
A10	$\overline{CS2}$	Serial port control	Chip Select (Serial Port 2). Serial Port 2 is used for the external flash ROM.
A11	$\overline{RESET}$	Miscellaneous digital	Reset Pin.
A12	XTALN	Miscellaneous digital[1]	Crystal Input.
A13	PVDD2	Power	PLL Digital Supply Voltage (1.8 V).
A14	NC	N/A	No Connect. Do not connect to this pin.
A15	NC	N/A	No Connect. Do not connect to this pin.
A16	CVDD1	Power	Comparator Supply Voltage (1.8 V).
A17	RX_CN	Rx input	Rx Clock Complement Input.
A18	RX_0N	Rx input	Rx Channel 0 Complement Input.
A19	RX_1N	Rx input	Rx Channel 1 Complement Input.
A20	RX_2N	Rx input	Rx Channel 2 Complement Input.
A21	CVDD1	Power	Comparator Supply Voltage (1.8 V).
A22	NC	N/A	No Connect. Do not connect to this pin.
A23	NC	N/A	No Connect. Do not connect to this pin.
B1	OSD_IN[21]/EXT_DIN[5]	OSD video input/ miscellaneous digital	External OSD Video Pixel Input Port (OSD_IN[21])/Additional TTL Input for External CCIR 656 Video Data (EXT_DIN[5]).
B2	OSD_IN[22]/EXT_DIN[6]	OSD video input/ miscellaneous digital	External OSD Video Pixel Input Port (OSD_IN[22])/Additional TTL Input for External CCIR 656 Video Data (EXT_DIN[6]).
B3	OSD_VS	OSD video sync	Vertical Sync for the OSD Input Port.
B4	AUD_IN[0]	Audio input	S/PDIF/DSD0 Audio Input.
B5	AUD_IN[3]	Audio input	I^2S2/DSD3 Audio Input.
B6	SFL	SFL	Subcarrier Frequency Lock Signal (SFL).
B7	ARC1_OUT	Audio output	Audio Return Channel for HDMI Tx1.
B8	MISO1	Serial port control	Master In Slave Out (Serial Port 1). Serial Port 1 is used for OSD control.
B9	MOSI2	Serial port control	Master Out Slave In (Serial Port 2). Serial Port 2 is used for the external flash ROM.
B10	MISO2	Serial port control	Master In Slave Out (Serial Port 2). Serial Port 2 is used for the external flash ROM.
B11	ALSB	I^2C control	Sets LSB of I^2C address. When the ALSB pin is set low, the I^2C address is 0x18; when the ALSB pin is set high, the I^2C address is 0x1A.
B12	XTALP	Miscellaneous digital[1]	Crystal Input.
B13	PVDD1	Power	PLL Analog Supply Voltage (1.8 V).
B14	NC	N/A	No Connect. Do not connect to this pin.
B15	NC	N/A	No Connect. Do not connect to this pin.
B16	GND	GND	Ground.
B17	RX_CP	Rx input	Rx Clock True Input.
B18	RX_0P	Rx input	Rx Channel 0 True Input.
B19	RX_1P	Rx input	Rx Channel 1 True Input.
B20	RX_2P	Rx input	Rx Channel 2 True Input.
B21	GND	GND	Ground.
B22	NC	N/A	No Connect. Do not connect to this pin.
B23	NC	N/A	No Connect. Do not connect to this pin.

Pin No.	Mnemonic	Type	Description
C1	OSD_IN[19]/EXT_DIN[3]	OSD video input/ miscellaneous digital	External OSD Video Pixel Input Port (OSD_IN[19])/Additional TTL Input for External CCIR 656 Video Data (EXT_DIN[3]).
C2	OSD_IN[20]/EXT_DIN[4]	OSD video input/ miscellaneous digital	External OSD Video Pixel Input Port (OSD_IN[20])/Additional TTL Input for External CCIR 656 Video Data (EXT_DIN[4]).
C3	GND	GND	Ground.
C4	AUD_IN[4]	Audio input	I^2S3/DSD4 Audio Input.
C5	DSD_CLK	Audio input	DSD Audio Clock Input.
C6	SCLK	Audio input	I^2S Bit Clock Input.
C7	SCL	I^2C control	I^2C Clock Input. SCL is open drain; use a 4.7 kΩ resistor to connect this pin to a 3.3 V supply.
C8	SCK1	Serial port control	Serial Clock (Serial Port 1). Serial Port 1 is used for OSD control.
C9	GND	GND	Ground.
C10	INT0	Miscellaneous digital	Interrupt Pin 0. When status bits change, this pin is triggered.
C11	PDN	Miscellaneous digital	Power-Down. This pin controls the power state of the ADV8003.
C12	GND	GND	Ground.
C13	GND	GND	Ground.
C14	NC	N/A	No Connect. Do not connect to this pin.
C15	NC	N/A	No Connect. Do not connect to this pin.
C16	RX_HPD	Rx input	Hot Plug Assert Signal Output for the Rx Input.
C17	AVDD1	Power	HDMI Rx Inputs Analog Supply (3.3 V).
C18	GND	GND	Ground.
C19	GND	GND	Ground.
C20	AVDD1	Power	HDMI Rx Inputs Analog Supply (3.3 V).
C21	AVDD1	Power	HDMI Rx Inputs Analog Supply (3.3 V).
C22	NC	N/A	No Connect. Do not connect to this pin.
C23	NC	N/A	No Connect. Do not connect to this pin.
D1	OSD_IN[16]/EXT_DIN[0]	OSD video input/ miscellaneous digital	External OSD Video Pixel Input Port (OSD_IN[16])/Additional TTL Input for External CCIR 656 Video Data (EXT_DIN[0]).
D2	OSD_IN[17]/EXT_DIN[1]	OSD video input/ miscellaneous digital	External OSD Video Pixel Input Port (OSD_IN[17])/Additional TTL Input for External CCIR 656 Video Data (EXT_DIN[1]).
D3	OSD_IN[18]/EXT_DIN[2]	OSD video input/ miscellaneous digital	External OSD Video Pixel Input Port (OSD_IN[18])/Additional TTL Input for External CCIR 656 Video Data (EXT_DIN[2]).
D4	GND	GND	Ground.
D5	DVDD_IO	Power	Digital Interface Supply (3.3 V).
D6	MCLK	Audio input	MCLK for S/PDIF Input Audio.
D7	SDA	I^2C control	I^2C Data Input. SDA is open drain; use a 4.7 kΩ resistor to connect this pin to a 3.3 V supply.
D8	$\overline{CS1}$	Serial port control	Chip Select (Serial Port 1). Serial Port 1 is used for OSD control.
D9	GND	GND	Ground.
D10	INT1	Miscellaneous digital	Interrupt Pin for HDMI Transmitter Outputs. When status bits change, an interrupt is generated on this pin.
D11	INT2	Miscellaneous digital	Interrupt Pin for HDMI Receiver Input Lines. When status bits change, an interrupt is generated on this pin.
D12	DVDD_IO	Power	Digital Interface Supply (3.3 V).
D13	TEST1	Miscellaneous digital	Test Pin. Float this pin.
D14	NC	N/A	No Connect. Do not connect to this pin.
D15	NC	N/A	No Connect. Do not connect to this pin.
D16	RX_5V	Rx input	5 V Detect Pin for the Rx Input.
D17	NC	N/A	No Connect. Do not connect to this pin.
D18	NC	N/A	No Connect. Do not connect to this pin.
D19	RTERM	HDMI Rx input	This pin sets internal termination resistance. Use a 500 Ω resistor between this pin and GND. Place the RTERM resistor as close as possible to the ADV8003.
D20	AVDD2	Power	Analog Power Supply (3.3 V).
D21	AVDD2	Power	Analog Power Supply (3.3 V).
D22	NC	N/A	No Connect. Do not connect to this pin.
D23	NC	N/A	No Connect. Do not connect to this pin.

Pin No.	Mnemonic	Type	Description
E1	OSD_IN[13]/VBI_SCK	OSD video input/ miscellaneous digital	External OSD Video Pixel Input Port (OSD_IN[13])/Serial Clock for VBI Data Serial Port (VBI_SCK).
E2	OSD_IN[14]/VBI_MOSI	OSD video input/ miscellaneous digital	External OSD Video Pixel Input Port (OSD_IN[14])/Master Out Slave In for VBI Data Serial Port (VBI_MOSI).
E3	OSD_IN[15]/VBI_$\overline{CS}$	OSD video input/ miscellaneous digital	External OSD Video Pixel Input Port (OSD_IN[15])/Chip Select for VBI Data Serial Port (VBI_$\overline{CS}$).
E4	DVDD_IO	Power	Digital Interface Supply (3.3 V).
E20	TEST2	Miscellaneous analog	Test Pin. Float this pin.
E21	GND	GND	Ground.
E22	NC	N/A	No Connect. Do not connect to this pin.
E23	NC	N/A	No Connect. Do not connect to this pin.
F1	OSD_IN[9]	OSD video input	External OSD Video Pixel Input Port (OSD_IN[9]).
F2	OSD_IN[10]	OSD video input	External OSD Video Pixel Input Port (OSD_IN[10]).
F3	OSD_IN[11]	OSD video input	External OSD Video Pixel Input Port (OSD_IN[11]).
F4	OSD_IN[12]	OSD video input/ miscellaneous digital	External OSD Video Pixel Input Port (OSD_IN[12]).
F20	NC	N/A	No Connect. Do not connect to this pin.
F21	PVDD3	Power	PLL Supply (1.8 V).
F22	GND	GND	Ground.
F23	CEC1	HDMI Tx1	HDMI Tx1 Consumer Electronics Control (CEC).
G1	OSD_IN[5]	OSD video input	External OSD Video Pixel Input Port (OSD_IN[5]).
G2	OSD_IN[6]	OSD video input	External OSD Video Pixel Input Port (OSD_IN[6]).
G3	OSD_IN[7]	OSD video input	External OSD Video Pixel Input Port (OSD_IN[7]).
G4	OSD_IN[8]	OSD video input	External OSD Video Pixel Input Port (OSD_IN[8]).
G7	GND	GND	Ground.
G8	GND	GND	Ground.
G9	GND	GND	Ground.
G10	DVDD	Power	Digital Power Supply (1.8 V).
G11	GND	GND	Ground.
G12	GND	GND	Ground.
G13	DVDD	Power	Digital Power Supply (1.8 V).
G14	GND	GND	Ground.
G15	GND	GND	Ground.
G16	GND	GND	Ground.
G17	GND	GND	Ground.
G20	ELPF1	Miscellaneous analog[1]	External Loop Filter for PLL 1. Connect to PVDD3.
G21	ELPF2	Miscellaneous analog[1]	External Loop Filter for PLL 2. Connect to PVDD3.
G22	GND	GND	Ground.
G23	AVDD3	Power	HDMI Analog Power Supply (1.8 V).
H1	OSD_IN[1]	OSD video input	External OSD Video Pixel Input Port (OSD_IN[1]).
H2	OSD_IN[2]	OSD video input	External OSD Video Pixel Input Port (OSD_IN[2]).
H3	OSD_IN[3]	OSD video input	External OSD Video Pixel Input Port (OSD_IN[3]).
H4	OSD_IN[4]	OSD video input	External OSD Video Pixel Input Port (OSD_IN[4]).
H7	GND	GND	Ground.
H8	GND	GND	Ground.
H9	GND	GND	Ground.
H10	GND	GND	Ground.
H11	GND	GND	Ground.
H12	GND	GND	Ground.
H13	GND	GND	Ground.
H14	GND	GND	Ground.
H15	GND	GND	Ground.
H16	GND	GND	Ground.
H17	GND	GND	Ground.
H20	GND	GND	Ground.
H21	GND	GND	Ground.
H22	TX1_2+	HDMI Tx1	HDMI1 Channel 2 True Output.

Pin No.	Mnemonic	Type	Description
H23	TX1_2−	HDMI Tx1	HDMI1 Channel 2 Complementary Output.
J1	DE	Digital video sync	Data Enable for Digital Input Video.
J2	HS	Digital video sync	Horizontal Sync for Digital Input Video.
J3	OSD_HS	Digital video sync	Horizontal Sync for the OSD Input Port (OSD_HS).
J4	OSD_IN[0]	OSD video input	External OSD Video Pixel Input Port (OSD_IN[0]).
J7	DVDD	Power	Digital Power Supply (1.8 V).
J8	GND	GND	Ground.
J9	GND	GND	Ground.
J10	GND	GND	Ground.
J11	GND	GND	Ground.
J12	GND	GND	Ground.
J13	GND	GND	Ground.
J14	GND	GND	Ground.
J15	GND	GND	Ground.
J16	GND	GND	Ground.
J17	DVDD	Power	Digital Power Supply (1.8 V).
J20	DDC1_SDA	HDMI Tx1	HDCP Slave Serial Data for HDMI Tx1. This pin is open drain; use a 2 kΩ resistor to connect this pin to the HDMI Tx 5 V supply.
J21	GND	GND	Ground.
J22	TX1_1+	HDMI Tx1	HDMI1 Channel 1 True Output.
J23	TX1_1−	HDMI Tx1	HDMI1 Channel 1 Complementary Output.
K1	VS	Digital video sync	Vertical Sync for Digital Input Video.
K2	PCLK	Digital video sync	Pixel Clock for Digital Input Video.
K3	DVDD_IO	Power	Digital Interface Supply (3.3 V).
K4	DVDD_IO	Power	Digital Interface Supply (3.3 V).
K7	GND	GND	Ground.
K8	GND	GND	Ground.
K9	GND	GND	Ground.
K10	GND	GND	Ground.
K11	GND	GND	Ground.
K12	GND	GND	Ground.
K13	GND	GND	Ground.
K14	GND	GND	Ground.
K15	GND	GND	Ground.
K16	GND	GND	Ground.
K17	GND	GND	Ground.
K20	DDC1_SCL	HDMI Tx1	HDCP Slave Serial Clock for HDMI Tx1. This pin is open drain; use a 2 kΩ resistor to connect this pin to the HDMI Tx 5 V supply.
K21	GND	GND	Ground.
K22	TX1_0+	HDMI Tx1	HDMI1 Channel 0 True Output.
K23	TX1_0−	HDMI Tx1	HDMI1 Channel 0 Complementary Output.
L1	P[32]	Digital video input	Digital Video Input Bus[35:0].
L2	P[33]	Digital video input	Digital Video Input Bus[35:0].
L3	P[34]	Digital video input	Digital Video Input Bus[35:0].
L4	P[35]	Digital video input	Digital Video Input Bus[35:0].
L7	DVDD	Power	Digital Power Supply (1.8 V).
L8	GND	GND	Ground.
L9	GND	GND	Ground.
L10	GND	GND	Ground.
L11	GND	GND	Ground.
L12	GND	GND	Ground.
L13	GND	GND	Ground.
L14	GND	GND	Ground.
L15	GND	GND	Ground.
L16	GND	GND	Ground.
L17	GND	GND	Ground.

Pin No.	Mnemonic	Type	Description
L20	HPD_TX1	HDMI Tx1	Hot Plug Assert Signal Input for HDMI Tx1.
L21	GND	GND	Ground.
L22	TX1_C+	HDMI Tx1	HDMI1 Clock True Output.
L23	TX1_C–	HDMI Tx1	HDMI1 Clock Complementary Output.
M1	P[28]	Digital video input	Digital Video Input Bus[35:0].
M2	P[29]	Digital video input	Digital Video Input Bus[35:0].
M3	P[30]	Digital video input	Digital Video Input Bus[35:0].
M4	P[31]	Digital video input	Digital Video Input Bus[35:0].
M7	GND	GND	Ground.
M8	GND	GND	Ground.
M9	GND	GND	Ground.
M10	GND	GND	Ground.
M11	GND	GND	Ground.
M12	GND	GND	Ground.
M13	GND	GND	Ground.
M14	GND	GND	Ground.
M15	GND	GND	Ground.
M16	GND	GND	Ground.
M17	GND	GND	Ground.
M20	R_TX1	HDMI Tx1[1]	Sets Internal Reference Currents. Place a 470 Ω resistor (1% tolerance) between this pin and ground. The external resistor should be placed as close as possible to the ADV8003.
M21	PVDD5	Power[1]	HDMI Tx PLL Power Supply (1.8 V).
M22	HEAC_1+	HDMI Tx1	HDMI Tx1 HEAC+ from HDMI Connector.
M23	HEAC_1–	HDMI Tx1	HDMI Tx1 HEAC– from HDMI Connector.
N1	P[24]	Digital video input	Digital Video Input Bus[35:0].
N2	P[25]	Digital video input	Digital Video Input Bus[35:0].
N3	P[26]	Digital video input	Digital Video Input Bus[35:0].
N4	P[27]	Digital video input	Digital Video Input Bus[35:0].
N7	GND	GND	Ground.
N8	GND	GND	Ground.
N9	GND	GND	Ground.
N10	GND	GND	Ground.
N11	GND	GND	Ground.
N12	GND	GND	Ground.
N13	GND	GND	Ground.
N14	GND	GND	Ground.
N15	GND	GND	Ground.
N16	GND	GND	Ground.
N17	GND	GND	Ground.
N20	CEC2	HDMI Tx2	HDMI Tx2 Consumer Electronics Control (CEC).
N21	PVDD5	Power[1]	HDMI Tx PLL Power Supply (1.8 V).
N22	AVDD3	Power	HDMI Analog Power Supply (1.8 V).
N23	NC	N/A	No Connect. Do not connect to this pin.
P1	P[20]	Digital video input	Digital Video Input Bus[35:0].
P2	P[21]	Digital video input	Digital Video Input Bus[35:0].
P3	P[22]	Digital video input	Digital Video Input Bus[35:0].
P4	P[23]	Digital video input	Digital Video Input Bus[35:0].
P7	DVDD	Power	Digital Power Supply (1.8 V).
P8	GND	GND	Ground.
P9	GND	GND	Ground.
P10	GND	GND	Ground.
P11	GND	GND	Ground.
P12	GND	GND	Ground.
P13	GND	GND	Ground.
P14	GND	GND	Ground.
P15	GND	GND	Ground.

Pin No.	Mnemonic	Type	Description
P16	GND	GND	Ground.
P17	DVDD	Power	Digital Power Supply (1.8 V).
P20	DDC2_SCL	HDMI Tx2	HDCP Slave Serial Clock for HDMI Tx2. This pin is open drain; use a 2 kΩ resistor to connect this pin to the HDMI Tx 5 V supply.
P21	GND	GND	Ground.
P22	TX2_2+	HDMI Tx2	HDMI2 Channel 2 True Output.
P23	TX2_2−	HDMI Tx2	HDMI2 Channel 2 Complementary Output.
R1	P[16]	Digital video input	Digital Video Input Bus[35:0].
R2	P[17]	Digital video input	Digital Video Input Bus[35:0].
R3	P[18]	Digital video input	Digital Video Input Bus[35:0].
R4	P[19]	Digital video input	Digital Video Input Bus[35:0].
R7	GND	GND	Ground.
R8	GND	GND	Ground.
R9	GND	GND	Ground.
R10	GND	GND	Ground.
R11	GND	GND	Ground.
R12	GND	GND	Ground.
R13	GND	GND	Ground.
R14	GND	GND	Ground.
R15	GND	GND	Ground.
R16	GND	GND	Ground.
R17	GND	GND	Ground.
R20	DDC2_SDA	HDMI Tx2	HDCP Slave Serial Data for HDMI Tx2. This pin is open drain; use a 2 kΩ resistor to connect this pin to the HDMI Tx 5 V supply.
R21	GND	GND	Ground.
R22	TX2_1+	HDMI Tx2	HDMI2 Channel 1 True Output.
R23	TX2_1−	HDMI Tx2	HDMI2 Channel 1 Complementary Output.
T1	P[14]	Digital video input	Digital Video Input Bus[35:0].
T2	P[15]	Digital video input	Digital Video Input Bus[35:0].
T3	GND	GND	Ground.
T4	GND	GND	Ground.
T7	GND	GND	Ground.
T8	GND	GND	Ground.
T9	GND	GND	Ground.
T10	GND	GND	Ground.
T11	GND	GND	Ground.
T12	GND	GND	Ground.
T13	GND	GND	Ground.
T14	GND	GND	Ground.
T15	GND	GND	Ground.
T16	GND	GND	Ground.
T17	GND	GND	Ground.
T20	HPD_TX2	HDMI Tx2	Hot Plug Assert Signal Input for HDMI Tx2.
T21	GND	GND	Ground.
T22	TX2_0+	HDMI Tx2	HDMI2 Channel 0 True Output.
T23	TX2_0−	HDMI Tx2	HDMI2 Channel 0 Complementary Output.
U1	P[10]	Digital video input	Digital Video Input Bus[35:0].
U2	P[11]	Digital video input	Digital Video Input Bus[35:0].
U3	P[12]	Digital video input	Digital Video Input Bus[35:0].
U4	P[13]	Digital video input	Digital Video Input Bus[35:0].
U7	GND	GND	Ground.
U8	GND	GND	Ground.
U9	DVDD	Power	Digital Power Supply (1.8 V).
U10	GND	GND	Ground.
U11	GND	GND	Ground.
U12	DVDD	Power	Digital Power Supply (1.8 V).

Pin No.	Mnemonic	Type	Description
U13	GND	GND	Ground.
U14	GND	GND	Ground.
U15	DVDD	Power	Digital Power Supply (1.8 V).
U16	GND	GND	Ground.
U17	GND	GND	Ground.
U20	R_TX2	HDMI Tx2[1]	Sets internal reference currents. Place a 470 Ω resistor (1% tolerance) between this pin and ground, as close as possible to the ADV8003.
U21	GND	GND	Ground.
U22	TX2_C+	HDMI Tx2	HDMI2 Clock True Output.
U23	TX2_C−	HDMI Tx2	HDMI2 Clock Complementary Output.
V1	P[6]	Digital video input	Digital Video Input Bus[35:0].
V2	P[7]	Digital video input	Digital Video Input Bus[35:0].
V3	P[8]	Digital video input	Digital Video Input Bus[35:0].
V4	P[9]	Digital video input	Digital Video Input Bus[35:0].
V20	GND	GND	Ground.
V21	PVDD6	Power[1]	HDMI Tx PLL Power Supply (1.8 V).
V22	HEAC_2+	HDMI Tx2	HDMI Tx2 HEC+ from the HDMI Connector.
V23	HEAC_2−	HDMI Tx2	HDMI Tx2 HEC− from the HDMI Connector.
W1	P[2]	Digital video input	Digital Video Input Bus[35:0].
W2	P[3]	Digital video input	Digital Video Input Bus[35:0].
W3	P[4]	Digital video input	Digital Video Input Bus[35:0].
W4	P[5]	Digital video input	Digital Video Input Bus[35:0].
W20	TEST3	Miscellaneous digital	Test Pin. Connect this pin to ground through a 0.1 µF capacitor.
W21	PVDD6	Power[1]	HDMI Tx PLL Power Supply (1.8 V).
W22	AVDD3	Power	HDMI Analog Power Supply (1.8 V).
W23	NC	N/A	No Connect. Do not connect to this pin.
Y1	P[0]	Digital video input	Digital Video Input Bus[35:0].
Y2	P[1]	Digital video input	Digital Video Input Bus[35:0].
Y3	DDR_DQS[2]	DDR interface	Data Strobe for DDR Data Bytes[23:16].
Y4	GND	GND	Ground.
Y5	DDR_DQ[23]	DDR interface	Data Line. Interface to external RAM data lines.
Y6	DVDD_DDR	Power	DDR Interface Supply (1.8 V).
Y7	DDR_DQS[3]	DDR interface	Data Strobe for DDR Data Bytes[31:24].
Y8	GND	GND	Ground.
Y9	DDR_A[11]	DDR interface	Address Line. Interface to external RAM address lines.
Y10	DVDD_DDR	Power	DDR Interface Supply (1.8 V).
Y11	DDR_A[4]	DDR interface	Address Line. Interface to external RAM address lines.
Y12	GND	GND	Ground.
Y13	$\overline{\text{DDR_CAS}}$	DDR interface	Column Address Strobe for DDR Memory.
Y14	DVDD_DDR	Power	DDR Interface Supply (1.8 V).
Y15	DDR_$\overline{\text{CK}}$	DDR interface	DDR Memory Clock. Interface to external DDR RAM clock lines.
Y16	GND	GND	Ground.
Y17	DDR_DQ[9]	DDR Interface	Data Line. Interface to external RAM data lines.
Y18	DVDD_DDR	Power	DDR Interface Supply (1.8 V).
Y19	DDR_DQ[14]	DDR interface	Data Line. Interface to external RAM data lines.
Y20	GND	GND	Ground.
Y21	DDR_DQ[6]	DDR interface	Data Line. Interface to external RAM data lines.
Y22	PVDD_DDR	Power	DDR Interface PLL Supply (1.8 V).
Y23	GND	GND	Ground.
AA1	DDR_DQ[18]	DDR interface	Data Line. Interface to external RAM data lines.
AA2	GND	GND	Ground.
AA3	GND	GND	Ground.
AA4	$\overline{\text{DDR_DQS[2]}}$	DDR interface	Data Strobe for DDR Data Bytes[23:16].
AA5	DDR_DQ[26]	DDR interface	Data Line. Interface to external RAM data lines.
AA6	DVDD_DDR	Power	DDR Interface Supply (1.8 V).
AA7	$\overline{\text{DDR_DQS[3]}}$	DDR interface	Data Strobe for DDR Data Bytes[31:24].

Pin No.	Mnemonic	Type	Description
AA8	NC/GND	No connect/GND	For new ADV8003 designs, do not connect to this pin. For designs that must maintain consistency with the ADV8002, this pin can be grounded.
AA9	DDR_A[8]	DDR interface	Address Line. Interface to external RAM address lines.
AA10	DVDD_DDR	Power	DDR Interface Supply (1.8 V).
AA11	DDR_A[2]	DDR interface	Address Line. Interface to external RAM address lines.
AA12	GND	GND	Ground.
AA13	DDR_$\overline{CS}$	DDR interface	DDR Chip Select. Interface to external DDR RAM chip selects.
AA14	DVDD_DDR	Power	DDR Interface Supply (1.8 V).
AA15	DDR_CK	DDR interface	DDR Memory Clock. Interface to external DDR RAM clock lines.
AA16	GND	GND	Ground.
AA17	DDR_DQ[11]	DDR interface	Data Line. Interface to external RAM data lines.
AA18	DVDD_DDR	Power	DDR Interface Supply (1.8 V).
AA19	DDR_DM[1]	DDR interface	Data Mask for Data Lines[15:8].
AA20	DDR_DM[0]	DDR interface	Data Mask for Data Lines[7:0].
AA21	GND	GND	Ground.
AA22	GND	GND	Ground.
AA23	DDR_DQ[3]	DDR interface	Data Line. Interface to external RAM data lines.
AB1	DDR_DQ[21]	DDR interface	Data Line. Interface to external RAM data lines.
AB2	DDR_DQ[19]	DDR interface	Data Line. Interface to external RAM data lines.
AB3	DDR_DQ[17]	DDR interface	Data Line. Interface to external RAM data lines.
AB4	DDR_DM[2]	DDR interface	Data Mask for Data Lines[23:16].
AB5	DDR_DQ[30]	DDR interface	Data Line. Interface to external RAM data lines.
AB6	DDR_DM[3]	DDR interface	Data Mask for Data Lines[31:25].
AB7	DDR_DQ[31]	DDR interface	Data Line. Interface to external RAM data lines.
AB8	DDR_DQ[29]	DDR interface	Data Line. Interface to external RAM data lines.
AB9	DDR_A[12]	DDR interface	Address Line. Interface to external RAM address lines.
AB10	DDR_A[6]	DDR interface	Address Line. Interface to external RAM address lines.
AB11	DDR_A[3]	DDR interface	Address Line. Interface to external RAM address lines.
AB12	DDR_A[0]	DDR interface	Address Line. Interface to external RAM address lines.
AB13	DDR_BA[0]	DDR interface	Bank Address Line. Indicates which data bank to write/read from.
AB14	$\overline{DDR_RAS}$	DDR interface	Row Address Strobe for DDR Memory.
AB15	DDR_CKE	DDR interface	Clock Enable for External DDR Memory.
AB16	DDR_DQ[12]	DDR interface	Data Line. Interface to external RAM data lines.
AB17	DDR_DQS[1]	DDR interface	Data Strobe for DDR Data Bytes[15:8].
AB18	DDR_DQ[8]	DDR interface	Data Line. Interface to external RAM data lines.
AB19	DDR_DQ[13]	DDR interface	Data Line. Interface to external RAM data lines.
AB20	DDR_DQ[0]	DDR interface	Data Line. Interface to external RAM data lines.
AB21	DDR_DQ[5]	DDR interface	Data Line. Interface to external RAM data lines.
AB22	DDR_DQS[0]	DDR interface	Data Strobe for DDR Data Bytes[7:0].
AB23	DDR_DQ[4]	DDR interface	Data Line. Interface to external RAM data lines.
AC1	DDR_DQ[16]	DDR interface	Data Line. Interface to external RAM data lines.
AC2	DDR_DQ[20]	DDR interface	Data Line. Interface to external RAM data lines.
AC3	DDR_DQ[22]	DDR interface	Data Line. Interface to external RAM data lines.
AC4	DDR_DQ[25]	DDR interface	Data Line. Interface to external RAM data lines.
AC5	DDR_DQ[28]	DDR interface	Data Line. Interface to external RAM data lines.
AC6	DDR_DQ[27]	DDR interface	Data Line. Interface to external RAM data lines.
AC7	DDR_DQ[24]	DDR interface	Data Line. Interface to external RAM data lines.
AC8	DDR_A[9]	DDR interface	Address Line. Interface to external RAM address lines.
AC9	DDR_A[5]	DDR interface	Address Line. Interface to external RAM address lines.
AC10	DDR_A[7]	DDR interface	Address Line. Interface to external RAM address lines.
AC11	DDR_A[1]	DDR interface	Address Line. Interface to external RAM address lines.
AC12	DDR_A[10]	DDR interface	Address Line. Interface to external RAM address lines.
AC13	DDR_BA[1]	DDR interface	Bank Address Line. Indicates which data bank to write/read from.
AC14	DDR_BA[2]	DDR interface	Bank Address Line. Indicates which data bank to write/read from.
AC15	DDR_$\overline{WE}$	DDR interface	Write Enable Signal for DDR RAM.
AC16	DDR_VREF	DDR interface[1]	Reference Voltage for DDR RAM.

Pin No.	Mnemonic	Type	Description
AC17	DDR_DQ[10]	DDR interface	Data Line. Interface to external RAM data lines.
AC18	$\overline{\text{DDR_DQS}}$[1]	DDR interface	Data Strobe for DDR Data Bytes[15:8].
AC19	DDR_DQ[15]	DDR interface	Data Line. Interface to external RAM data lines.
AC20	DDR_DQ[7]	DDR interface	Data Line. Interface to external RAM data lines.
AC21	DDR_DQ[2]	DDR interface	Data Line. Interface to external RAM data lines.
AC22	$\overline{\text{DDR_DQS}}$[0]	DDR interface	Data Strobe for DDR Data Bytes[7:0].
AC23	DDR_DQ[1]	DDR interface	Data Line. Interface to external RAM data lines.

[1] Sensitive node. Careful layout is important. Keep the associated circuitry as close as possible to the ADV8003.

	1	2	3	4	5	6	7	8	9	10	11	12	13	14	15	16	17	18	19	20	21	22	23	
A	OSD_IN[23]/EXT_DIN[7]	OSD_DE	OSD_CLK/EXT_CLK	TEST4	TEST5	TEST6	TEST7	MOSI1	SCK2	$\overline{CS2}$	$\overline{RESET}$	XTALN	PVDD2	NC	NC	CVDD1	RX_CN	RX_0N	RX_1N	RX_2N	CVDD1	NC	NC	A
B	OSD_IN[21]/EXT_DIN[5]	OSD_IN[22]/EXT_DIN[6]	OSD_VS	TEST8	TEST9	TEST10	TEST11	MISO1	MOSI2	MISO2	ALSB	XTALP	PVDD1	NC	NC	GND	RX_CP	RX_0P	RX_1P	RX_2P	GND	NC	NC	B
C	OSD_IN[19]/EXT_DIN[3]	OSD_IN[20]/EXT_DIN[4]	GND	TEST12	TEST13	TEST14	SCL	SCK1	GND	INT0	PDN	GND	GND	NC	NC	RX_HPD	AVDD1	GND	GND	AVDD1	AVDD1	NC	NC	C
D	OSD_IN[16]/EXT_DIN[0]	OSD_IN[17]/EXT_DIN[1]	OSD_IN[18]/EXT_DIN[2]	GND	DVDD_IO	TEST15	SDA	$\overline{CS1}$	GND	TEST16	INT2	DVDD_IO	TEST1	NC	NC	RX_5V	NC	NC	RTERM	AVDD2	AVDD2	NC	NC	D
E	OSD_IN[13]/VBI_SCK	OSD_IN[14]/VBI_MOSI	OSD_IN[15]/VBI_CS	DVDD_IO																TEST2	GND	NC	NC	E
F	OSD_IN[9]	OSD_IN[10]	OSD_IN[11]	OSD_IN[12]																NC	PVDD3	GND	NC	F
G	OSD_IN[5]	OSD_IN[6]	OSD_IN[7]	OSD_IN[8]			GND	GND	GND	DVDD	GND	GND	DVDD	GND	GND	GND	GND			ELPF1	ELPF2	GND	AVDD3	G
H	OSD_IN[1]	OSD_IN[2]	OSD_IN[3]	OSD_IN[4]			GND	GND	GND	GND	GND	GND	GND	GND	GND	GND	GND			GND	GND	NC	NC	H
J	DE	HS	OSD_HS	OSD_IN[0]			DVDD	GND	GND	GND	GND	GND	GND	GND	GND	GND	DVDD			NC	GND	NC	NC	J
K	VS	PCLK	DVDD_IO	DVDD_IO			GND	GND	GND	GND	GND	GND	GND	GND	GND	GND	GND			NC	GND	NC	NC	K
L	P[32]	P[33]	P[34]	P[35]			DVDD	GND	GND	GND	GND	GND	GND	GND	GND	GND	GND			NC	GND	NC	NC	L
M	P[28]	P[29]	P[30]	P[31]			GND	GND	GND	GND	GND	GND	GND	GND	GND	GND	GND			NC	PVDD5	NC	NC	M
N	P[24]	P[25]	P[26]	P[27]			GND	GND	GND	GND	GND	GND	GND	GND	GND	GND	GND			NC	PVDD5	AVDD3	NC	N
P	P[20]	P[21]	P[22]	P[23]			DVDD	GND	GND	GND	GND	GND	GND	GND	GND	GND	DVDD			NC	GND	NC	NC	P
R	P[16]	P[17]	P[18]	P[19]			GND	GND	GND	GND	GND	GND	GND	GND	GND	GND	GND			NC	GND	NC	NC	R
T	P[14]	P[15]	GND	GND			GND	GND	GND	GND	GND	GND	GND	GND	GND	GND	GND			NC	GND	NC	NC	T
U	P[10]	P[11]	P[12]	P[13]			GND	GND	DVDD	GND	GND	DVDD	GND	GND	DVDD	GND	GND			NC	GND	NC	NC	U
V	P[6]	P[7]	P[8]	P[9]																GND	PVDD6	NC	NC	V
W	P[2]	P[3]	P[4]	P[5]																TEST3	PVDD6	AVDD3	NC	W
Y	P[0]	P[1]	DDR_DQS[2]	GND	DDR_DQ[23]	DVDD_DDR	DDR_DQS[3]	GND	DDR_A[11]	DVDD_DDR	DDR_A[4]	GND	$\overline{DDR_CAS}$	DVDD_DDR	$\overline{DDR_CK}$	GND	DDR_DQ[9]	DVDD_DDR	DDR_DQ[14]	GND	DDR_DQ[6]	PVDD_DDR	GND	Y
AA	DDR_DQ[18]	GND	GND	$\overline{DDR_DQS[2]}$	DDR_DQ[26]	DVDD_DDR	$\overline{DDR_DQS[3]}$	NC/GND	DDR_A[8]	DVDD_DDR	DDR_A[2]	GND	$\overline{DDR_CS}$	DVDD_DDR	DDR_CK	GND	DDR_DQ[11]	DVDD_DDR	DDR_DM[1]	DDR_DM[0]	GND	GND	DDR_DQ[3]	AA
AB	DDR_DQ[21]	DDR_DQ[19]	DDR_DQ[17]	DDR_DM[2]	DDR_DQ[30]	DDR_DM[3]	DDR_DQ[31]	DDR_DQ[29]	DDR_A[12]	DDR_A[6]	DDR_A[3]	DDR_A[0]	DDR_BA[0]	$\overline{DDR_RAS}$	DDR_CKE	DDR_DQ[12]	DDR_DQS[1]	DDR_DQ[8]	DDR_DQ[13]	DDR_DQ[0]	DDR_DQ[5]	DDR_DQS[0]	DDR_DQ[4]	AB
AC	DDR_DQ[16]	DDR_DQ[20]	DDR_DQ[22]	DDR_DQ[25]	DDR_DQ[28]	DDR_DQ[27]	DDR_DQ[24]	DDR_A[9]	DDR_A[5]	DDR_A[7]	DDR_A[1]	DDR_A[10]	DDR_BA[1]	DDR_BA[2]	$\overline{DDR_WE}$	DDR_VREF	DDR_DQ[10]	$\overline{DDR_DQS[1]}$	DDR_DQ[15]	DDR_DQ[7]	DDR_DQ[2]	$\overline{DDR_DQS[0]}$	DDR_DQ[1]	AC
	1	2	3	4	5	6	7	8	9	10	11	12	13	14	15	16	17	18	19	20	21	22	23	

10566-132

Figure 32. ADV8003KBCZ-7T Pin Configuration

Table 9. ADV8003KBCZ-7T Pin Function Descriptions

Pin No.	Mnemonic	Type	Description
A1	OSD_IN[23]/EXT_DIN[7]	OSD video input/ miscellaneous digital	External OSD Video Pixel Input Port (OSD_IN[23])/Additional TTL Input for External CCIR 656 Video Data (EXT_DIN[7]).
A2	OSD_DE	OSD video sync	Data Enable for the OSD Input Port.
A3	OSD_CLK/EXT_CLK	OSD video sync	Pixel Clock for the OSD Input Port (OSD_CLK)/Pixel Clock for External Video Data (EXT_CLK).
A4	TEST4	Miscellaneous digital	Test Pin. Connect this pin to ground through a 4.7 kΩ resistor.
A5	TEST5	Miscellaneous digital	Test Pin. Connect this pin to ground through a 4.7 kΩ resistor.
A6	TEST6	Miscellaneous digital	Test Pin. Connect this pin to ground through a 4.7 kΩ resistor.
A7	TEST7	Miscellaneous digital	Test Pin. Connect this pin to ground through a 4.7 kΩ resistor.
A8	MOSI1	Serial port control	Master Out Slave In (Serial Port 1). Serial Port 1 is used for OSD control.
A9	SCK2	Serial port control	Serial Clock (Serial Port 2). Serial Port 2 is used for the external flash ROM.
A10	$\overline{CS2}$	Serial port control	Chip Select (Serial Port 2). Serial Port 2 is used for the external flash ROM.
A11	$\overline{RESET}$	Miscellaneous digital	Reset Pin.
A12	XTALN	Miscellaneous digital[1]	Crystal Input.
A13	PVDD2	Power	PLL Digital Supply Voltage (1.8 V).
A14	NC	N/A	No Connect. Do not connect to this pin.
A15	NC	N/A	No Connect. Do not connect to this pin.
A16	CVDD1	Power	Comparator Supply Voltage (1.8 V).
A17	RX_CN	Rx input	Rx Clock Complement Input.
A18	RX_0N	Rx input	Rx Channel 0 Complement Input.
A19	RX_1N	Rx input	Rx Channel 1 Complement Input.
A20	RX_2N	Rx input	Rx Channel 2 Complement Input.
A21	CVDD1	Power	Comparator Supply Voltage (1.8 V).
A22	NC	N/A	No Connect. Do not connect to this pin.
A23	NC	N/A	No Connect. Do not connect to this pin.
B1	OSD_IN[21]/EXT_DIN[5]	OSD video input/ miscellaneous digital	External OSD Video Pixel Input Port (OSD_IN[21])/Additional TTL Input for External CCIR 656 Video Data (EXT_DIN[5]).
B2	OSD_IN[22]/EXT_DIN[6]	OSD video input/ miscellaneous digital	External OSD Video Pixel Input Port (OSD_IN[22])/Additional TTL Input for External CCIR 656 Video Data (EXT_DIN[6]).
B3	OSD_VS	OSD video sync	Vertical Sync for the OSD Input Port.
B4	TEST8	Miscellaneous digital	Test Pin. Connect this pin to ground through a 4.7 kΩ resistor.
B5	TEST9	Miscellaneous digital	Test Pin. Connect this pin to ground through a 4.7 kΩ resistor.
B6	TEST10	Miscellaneous digital	Test Pin. Connect this pin to ground through a 4.7 kΩ resistor.
B7	TEST11	Miscellaneous digital	Test Pin. Connect this pin to ground through a 4.7 kΩ resistor.
B8	MISO1	Serial port control	Master In Slave Out (Serial Port 1). Serial Port 1 is used for OSD control.
B9	MOSI2	Serial port control	Master Out Slave In (Serial Port 2). Serial Port 2 is used for the external flash ROM.
B10	MISO2	Serial port control	Master In Slave Out (Serial Port 2). Serial Port 2 is used for the external flash ROM.
B11	ALSB	I^2C control	Sets LSB of I^2C address. When the ALSB pin is set low, the I^2C address is 0x18; when the ALSB pin is set high, the I^2C address is 0x1A.
B12	XTALP	Miscellaneous digital[1]	Crystal Input.
B13	PVDD1	Power	PLL Analog Supply Voltage (1.8 V).
B14	NC	N/A	No Connect. Do not connect to this pin.
B15	NC	N/A	No Connect. Do not connect to this pin.
B16	GND	GND	Ground.
B17	RX_CP	Rx input	Rx Clock True Input.
B18	RX_0P	Rx input	Rx Channel 0 True Input.
B19	RX_1P	Rx input	Rx Channel 1 True Input.
B20	RX_2P	Rx input	Rx Channel 2 True Input.
B21	GND	GND	Ground.
B22	NC	N/A	No Connect. Do not connect to this pin.
B23	NC	N/A	No Connect. Do not connect to this pin.

Pin No.	Mnemonic	Type	Description
C1	OSD_IN[19]/EXT_DIN[3]	OSD video input/ miscellaneous digital	External OSD Video Pixel Input Port (OSD_IN[19])/Additional TTL Input for External CCIR 656 Video Data (EXT_DIN[3]).
C2	OSD_IN[20]/EXT_DIN[4]	OSD video input/ miscellaneous digital	External OSD Video Pixel Input Port (OSD_IN[20])/Additional TTL Input for External CCIR 656 Video Data (EXT_DIN[4]).
C3	GND	GND	Ground.
C4	TEST12	Miscellaneous digital	Test Pin. Connect this pin to ground through a 4.7 kΩ resistor.
C5	TEST13	Miscellaneous digital	Test Pin. Connect this pin to ground through a 4.7 kΩ resistor.
C6	TEST14	Miscellaneous digital	Test Pin. Connect this pin to ground through a 4.7 kΩ resistor.
C7	SCL	I^2C control	I^2C Clock Input. This pin is open drain; use a 4.7 kΩ resistor to connect this pin to a 3.3 V supply.
C8	SCK1	Serial port control	Serial Clock (Serial Port 1). Serial Port 1 is used for OSD control.
C9	GND	GND	Ground.
C10	INT0	Miscellaneous digital	Interrupt Pin 0. When status bits change, this pin is triggered.
C11	PDN	Miscellaneous digital	Power-Down. This pin controls the power state of the ADV8003.
C12	GND	GND	Ground.
C13	GND	GND	Ground.
C14	NC	N/A	No Connect. Do not connect to this pin.
C15	NC	N/A	No Connect. Do not connect to this pin.
C16	RX_HPD	Rx input	Hot Plug Assert Signal Output for the Rx Input.
C17	AVDD1	Power	HDMI Rx Inputs Analog Supply (3.3 V).
C18	GND	GND	Ground.
C19	GND	GND	Ground.
C20	AVDD1	Power	HDMI Rx Inputs Analog Supply (3.3 V).
C21	AVDD1	Power	HDMI Rx Inputs Analog Supply (3.3 V).
C22	NC	N/A	No Connect. Do not connect to this pin.
C23	NC	N/A	No Connect. Do not connect to this pin.
D1	OSD_IN[16]/EXT_DIN[0]	OSD video input/ miscellaneous digital	External OSD Video Pixel Input Port (OSD_IN[16])/Additional TTL Input for External CCIR 656 Video Data (EXT_DIN[0]).
D2	OSD_IN[17]/EXT_DIN[1]	OSD video input/ miscellaneous digital	External OSD Video Pixel Input Port (OSD_IN[17])/Additional TTL Input for External CCIR 656 Video Data (EXT_DIN[1]).
D3	OSD_IN[18]/EXT_DIN[2]	OSD video input/ miscellaneous digital	External OSD Video Pixel Input Port (OSD_IN[18])/Additional TTL Input for External CCIR 656 Video Data (EXT_DIN[2]).
D4	GND	GND	Ground.
D5	DVDD_IO	Power	Digital Interface Supply (3.3 V).
D6	TEST15	Miscellaneous digital	Test Pin. Connect this pin to ground through a 4.7 kΩ resistor.
D7	SDA	I^2C control	I^2C Data Input. This pin is open drain; use a 4.7 kΩ resistor to connect this pin to a 3.3 V supply.
D8	$\overline{CS1}$	Serial port control	Chip Select (Serial Port 1). Serial Port 1 is used for OSD control.
D9	GND	GND	Ground.
D10	TEST16	Miscellaneous digital	Test Pin. Connect this pin to ground through a 4.7 kΩ resistor.
D11	INT2	Miscellaneous digital	Interrupt Pin for HDMI Receiver Input Lines. When status bits change, an interrupt is generated on this pin.
D12	DVDD_IO	Power	Digital Interface Supply (3.3 V).
D13	TEST1	Miscellaneous digital	Test Pin. Float this pin.
D14	NC	N/A	No Connect. Do not connect to this pin.
D15	NC	N/A	No Connect. Do not connect to this pin.
D16	RX_5V	Rx input	5 V Detect Pin for the Rx Input.
D17	NC	N/A	No Connect. Do not connect to this pin.
D18	NC	N/A	No Connect. Do not connect to this pin.
D19	RTERM	HDMI Rx input	This pin sets internal termination resistance. Use a 500 Ω resistor between this pin and GND. Place the RTERM resistor as close as possible to the ADV8003.
D20	AVDD2	Power	Analog Power Supply (3.3 V).
D21	AVDD2	Power	Analog Power Supply (3.3 V).
D22	NC	N/A	No Connect. Do not connect to this pin.
D23	NC	N/A	No Connect. Do not connect to this pin.

Pin No.	Mnemonic	Type	Description
E1	OSD_IN[13]/VBI_SCK	OSD video input/ miscellaneous digital	External OSD Video Pixel Input Port (OSD_IN[13])/Serial Clock for VBI Data Serial Port (VBI_SCK).
E2	OSD_IN[14]/VBI_MOSI	OSD video input/ miscellaneous digital	External OSD Video Pixel Input Port (OSD_IN[14])/Master Out Slave In for VBI Data Serial Port (VBI_MOSI).
E3	OSD_IN[15]/VBI_$\overline{CS}$	OSD video input/ miscellaneous digital	External OSD Video Pixel Input Port (OSD_IN[15])/Chip Select for VBI Data Serial Port (VBI_$\overline{CS}$).
E4	DVDD_IO	Power	Digital Interface Supply (3.3 V).
E20	TEST2	Miscellaneous analog	Test Pin. Float this pin.
E21	GND	GND	Ground.
E22	NC	N/A	No Connect. Do not connect to this pin.
E23	NC	N/A	No Connect. Do not connect to this pin.
F1	OSD_IN[9]	OSD video input	External OSD Video Pixel Input Port (OSD_IN[9]).
F2	OSD_IN[10]	OSD video input	External OSD Video Pixel Input Port (OSD_IN[10]).
F3	OSD_IN[11]	OSD video input	External OSD Video Pixel Input Port (OSD_IN[11]).
F4	OSD_IN[12]	OSD video input/ miscellaneous digital	External OSD Video Pixel Input Port (OSD_IN[11]).
F20	NC	N/A	No Connect. Do not connect to this pin.
F21	PVDD3	Power	PLL Supply (1.8 V).
F22	GND	GND	Ground.
F23	NC	N/A	No Connect. Do not connect to this pin.
G1	OSD_IN[5]	OSD video input	External OSD Video Pixel Input Port (OSD_IN[5]).
G2	OSD_IN[6]	OSD video input	External OSD Video Pixel Input Port (OSD_IN[6]).
G3	OSD_IN[7]	OSD video input	External OSD Video Pixel Input Port (OSD_IN[7]).
G4	OSD_IN[8]	OSD video input	External OSD Video Pixel Input Port (OSD_IN[8]).
G7	GND	GND	Ground.
G8	GND	GND	Ground.
G9	GND	GND	Ground.
G10	DVDD	Power	Digital Power Supply (1.8 V).
G11	GND	GND	Ground.
G12	GND	GND	Ground.
G13	DVDD	Power	Digital Power Supply (1.8 V).
G14	GND	GND	Ground.
G15	GND	GND	Ground.
G16	GND	GND	Ground.
G17	GND	GND	Ground.
G20	ELPF1	Miscellaneous analog[1]	External Loop Filter for PLL 1. Connect to PVDD3.
G21	ELPF2	Miscellaneous analog[1]	External Loop Filter for PLL 2. Connect to PVDD3.
G22	GND	GND	Ground.
G23	AVDD3	Power	HDMI Analog Power Supply (1.8 V).
H1	OSD_IN[1]	OSD video input	External OSD Video Pixel Input Port (OSD_IN[1]).
H2	OSD_IN[2]	OSD video input	External OSD Video Pixel Input Port (OSD_IN[2]).
H3	OSD_IN[3]	OSD video input	External OSD Video Pixel Input Port (OSD_IN[3]).
H4	OSD_IN[4]	OSD video input	External OSD Video Pixel Input Port (OSD_IN[4]).
H7	GND	GND	Ground.
H8	GND	GND	Ground.
H9	GND	GND	Ground.
H10	GND	GND	Ground.
H11	GND	GND	Ground.
H12	GND	GND	Ground.
H13	GND	GND	Ground.
H14	GND	GND	Ground.
H15	GND	GND	Ground.
H16	GND	GND	Ground.
H17	GND	GND	Ground.
H20	GND	GND	Ground.
H21	GND	GND	Ground.

Pin No.	Mnemonic	Type	Description
H22	NC	N/A	No Connect. Do not connect to this pin.
H23	NC	N/A	No Connect. Do not connect to this pin.
J1	DE	Digital video sync	Data Enable for Digital Input Video.
J2	HS	Digital video sync	Horizontal Sync for Digital Input Video.
J3	OSD_HS	Digital video sync	Horizontal Sync for the OSD Input Port (OSD_HS).
J4	OSD_IN[0]	OSD video input	External OSD Video Pixel Input Port (OSD_IN[0]).
J7	DVDD	Power	Digital Power Supply (1.8 V).
J8	GND	GND	Ground.
J9	GND	GND	Ground.
J10	GND	GND	Ground.
J11	GND	GND	Ground.
J12	GND	GND	Ground.
J13	GND	GND	Ground.
J14	GND	GND	Ground.
J15	GND	GND	Ground.
J16	GND	GND	Ground.
J17	DVDD	Power	Digital Power Supply (1.8 V).
J20	NC	N/A	No Connect. Do not connect to this pin.
J21	GND	GND	Ground.
J22	NC	N/A	No Connect. Do not connect to this pin.
J23	NC	N/A	No Connect. Do not connect to this pin.
K1	VS	Digital video sync	Vertical Sync for Digital Input Video.
K2	PCLK	Digital video sync	Pixel Clock for Digital Input Video.
K3	DVDD_IO	Power	Digital Interface Supply (3.3 V).
K4	DVDD_IO	Power	Digital Interface Supply (3.3 V).
K7	GND	GND	Ground.
K8	GND	GND	Ground.
K9	GND	GND	Ground.
K10	GND	GND	Ground.
K11	GND	GND	Ground.
K12	GND	GND	Ground.
K13	GND	GND	Ground.
K14	GND	GND	Ground.
K15	GND	GND	Ground.
K16	GND	GND	Ground.
K17	GND	GND	Ground.
K20	NC	N/A	No Connect. Do not connect to this pin.
K21	GND	GND	Ground.
K22	NC	N/A	No Connect. Do not connect to this pin.
K23	NC	N/A	No Connect. Do not connect to this pin.
L1	P[32]	Digital video input	Digital Video Input Bus[35:0].
L2	P[33]	Digital video input	Digital Video Input Bus[35:0].
L3	P[34]	Digital video input	Digital Video Input Bus[35:0].
L4	P[35]	Digital video input	Digital Video Input Bus[35:0].
L7	DVDD	Power	Digital Power Supply (1.8 V).
L8	GND	GND	Ground.
L9	GND	GND	Ground.
L10	GND	GND	Ground.
L11	GND	GND	Ground.
L12	GND	GND	Ground.
L13	GND	GND	Ground.
L14	GND	GND	Ground.
L15	GND	GND	Ground.
L16	GND	GND	Ground.
L17	GND	GND	Ground.
L20	NC	N/A	No Connect. Do not connect to this pin.

Pin No.	Mnemonic	Type	Description
L21	GND	GND	Ground.
L22	NC	N/A	No Connect. Do not connect to this pin.
L23	NC	N/A	No Connect. Do not connect to this pin.
M1	P[28]	Digital video input	Digital Video Input Bus[35:0].
M2	P[29]	Digital video input	Digital Video Input Bus[35:0].
M3	P[30]	Digital video input	Digital Video Input Bus[35:0].
M4	P[31]	Digital video input	Digital Video Input Bus[35:0].
M7	GND	GND	Ground.
M8	GND	GND	Ground.
M9	GND	GND	Ground.
M10	GND	GND	Ground.
M11	GND	GND	Ground.
M12	GND	GND	Ground.
M13	GND	GND	Ground.
M14	GND	GND	Ground.
M15	GND	GND	Ground.
M16	GND	GND	Ground.
M17	GND	GND	Ground.
M20	NC	N/A	No Connect. Do not connect to this pin.
M21	PVDD5	Power[1]	PLL Power Supply (1.8 V).
M22	NC	N/A	No Connect. Do not connect to this pin.
M23	NC	N/A	No Connect. Do not connect to this pin.
N1	P[24]	Digital video input	Digital Video Input Bus[35:0].
N2	P[25]	Digital video input	Digital Video Input Bus[35:0].
N3	P[26]	Digital video input	Digital Video Input Bus[35:0].
N4	P[27]	Digital video input	Digital Video Input Bus[35:0].
N7	GND	GND	Ground.
N8	GND	GND	Ground.
N9	GND	GND	Ground.
N10	GND	GND	Ground.
N11	GND	GND	Ground.
N12	GND	GND	Ground.
N13	GND	GND	Ground.
N14	GND	GND	Ground.
N15	GND	GND	Ground.
N16	GND	GND	Ground.
N17	GND	GND	Ground.
N20	NC	N/A	No Connect. Do not connect to this pin.
N21	PVDD5	Power[1]	PLL Power Supply (1.8 V).
N22	AVDD3	Power	HDMI Analog Power Supply (1.8 V).
N23	NC	N/A	No Connect. Do not connect to this pin.
P1	P[20]	Digital video input	Digital Video Input Bus[35:0].
P2	P[21]	Digital video input	Digital Video Input Bus[35:0].
P3	P[22]	Digital video input	Digital Video Input Bus[35:0].
P4	P[23]	Digital video input	Digital Video Input Bus[35:0].
P7	DVDD	Power	Digital Power Supply (1.8 V).
P8	GND	GND	Ground.
P9	GND	GND	Ground.
P10	GND	GND	Ground.
P11	GND	GND	Ground.
P12	GND	GND	Ground.
P13	GND	GND	Ground.
P14	GND	GND	Ground.
P15	GND	GND	Ground.
P16	GND	GND	Ground.
P17	DVDD	Power	Digital Power Supply (1.8 V).

Pin No.	Mnemonic	Type	Description
P20	NC	N/A	No Connect. Do not connect to this pin.
P21	GND	GND	Ground.
P22	NC	N/A	No Connect. Do not connect to this pin.
P23	NC	N/A	No Connect. Do not connect to this pin.
R1	P[16]	Digital video input	Digital Video Input Bus[35:0].
R2	P[17]	Digital video input	Digital Video Input Bus[35:0].
R3	P[18]	Digital video input	Digital Video Input Bus[35:0].
R4	P[19]	Digital video input	Digital Video Input Bus[35:0].
R7	GND	GND	Ground.
R8	GND	GND	Ground.
R9	GND	GND	Ground.
R10	GND	GND	Ground.
R11	GND	GND	Ground.
R12	GND	GND	Ground.
R13	GND	GND	Ground.
R14	GND	GND	Ground.
R15	GND	GND	Ground.
R16	GND	GND	Ground.
R17	GND	GND	Ground.
R20	NC	N/A	No Connect. Do not connect to this pin.
R21	GND	GND	Ground.
R22	NC	N/A	No Connect. Do not connect to this pin.
R23	NC	N/A	No Connect. Do not connect to this pin.
T1	P[14]	Digital video input	Digital Video Input Bus[35:0].
T2	P[15]	Digital video input	Digital Video Input Bus[35:0].
T3	GND	GND	Ground.
T4	GND	GND	Ground.
T7	GND	GND	Ground.
T8	GND	GND	Ground.
T9	GND	GND	Ground.
T10	GND	GND	Ground.
T11	GND	GND	Ground.
T12	GND	GND	Ground.
T13	GND	GND	Ground.
T14	GND	GND	Ground.
T15	GND	GND	Ground.
T16	GND	GND	Ground.
T17	GND	GND	Ground.
T20	NC	N/A	No Connect. Do not connect to this pin.
T21	GND	GND	Ground.
T22	NC	N/A	No Connect. Do not connect to this pin.
T23	NC	N/A	No Connect. Do not connect to this pin.
U1	P[10]	Digital video input	Digital Video Input Bus[35:0].
U2	P[11]	Digital video input	Digital Video Input Bus[35:0].
U3	P[12]	Digital video input	Digital Video Input Bus[35:0].
U4	P[13]	Digital video input	Digital Video Input Bus[35:0].
U7	GND	GND	Ground.
U8	GND	GND	Ground.
U9	DVDD	Power	Digital Power Supply (1.8 V).
U10	GND	GND	Ground.
U11	GND	GND	Ground.
U12	DVDD	Power	Digital Power Supply (1.8 V).
U13	GND	GND	Ground.
U14	GND	GND	Ground.
U15	DVDD	Power	Digital Power Supply (1.8 V).
U16	GND	GND	Ground.

Pin No.	Mnemonic	Type	Description
U17	GND	GND	Ground.
U20	NC	N/A	No Connect. Do not connect to this pin.
U21	GND	GND	Ground.
U22	NC	N/A	No Connect. Do not connect to this pin.
U23	NC	N/A	No Connect. Do not connect to this pin.
V1	P[6]	Digital video input	Digital Video Input Bus[35:0].
V2	P[7]	Digital video input	Digital Video Input Bus[35:0].
V3	P[8]	Digital video input	Digital Video Input Bus[35:0].
V4	P[9]	Digital video input	Digital Video Input Bus[35:0].
V20	GND	GND	Ground.
V21	PVDD6	Power[1]	PLL Power Supply (1.8 V).
V22	NC	N/A	No Connect. Do not connect to this pin.
V23	NC	N/A	No Connect. Do not connect to this pin.
W1	P[2]	Digital video input	Digital Video Input Bus[35:0].
W2	P[3]	Digital video input	Digital Video Input Bus[35:0].
W3	P[4]	Digital video input	Digital Video Input Bus[35:0].
W4	P[5]	Digital video input	Digital Video Input Bus[35:0].
W20	TEST3	Miscellaneous digital	Test Pin. Connect this pin to Ground through a 0.1 µF capacitor.
W21	PVDD6	Power[1]	PLL Power Supply (1.8 V).
W22	AVDD3	Power	HDMI Analog Power Supply (1.8 V).
W23	NC	N/A	No Connect. Do not connect to this pin.
Y1	P[0]	Digital video input	Digital Video Input Bus[35:0].
Y2	P[1]	Digital video input	Digital Video Input Bus[35:0].
Y3	DDR_DQS[2]	DDR interface	Data Strobe for DDR Data Bytes[23:16].
Y4	GND	GND	Ground.
Y5	DDR_DQ[23]	DDR interface	Data Line. Interface to external RAM data lines.
Y6	DVDD_DDR	Power	DDR Interface Supply (1.8 V).
Y7	DDR_DQS[3]	DDR interface	Data Strobe for DDR Data Bytes[31:24].
Y8	GND	GND	Ground.
Y9	DDR_A[11]	DDR interface	Address Line. Interface to external RAM address lines.
Y10	DVDD_DDR	Power	DDR Interface Supply (1.8 V).
Y11	DDR_A[4]	DDR interface	Address Line. Interface to external RAM address lines.
Y12	GND	GND	Ground.
Y13	$\overline{\text{DDR_CAS}}$	DDR interface	Column Address Strobe for DDR Memory.
Y14	DVDD_DDR	Power	DDR Interface Supply (1.8 V).
Y15	DDR_$\overline{\text{CK}}$	DDR interface	DDR Memory Clock. Interface to external DDR RAM clock lines.
Y16	GND	GND	Ground.
Y17	DDR_DQ[9]	DDR Interface	Data Line. Interface to external RAM data lines.
Y18	DVDD_DDR	Power	DDR Interface Supply (1.8 V).
Y19	DDR_DQ[14]	DDR interface	Data Line. Interface to external RAM data lines.
Y20	GND	GND	Ground.
Y21	DDR_DQ[6]	DDR interface	Data Line. Interface to external RAM data lines.
Y22	PVDD_DDR	Power	DDR Interface PLL Supply (1.8 V).
Y23	GND	GND	Ground.
AA1	DDR_DQ[18]	DDR interface	Data Line. Interface to external RAM data lines.
AA2	GND	GND	Ground.
AA3	GND	GND	Ground.
AA4	$\overline{\text{DDR_DQS[2]}}$	DDR interface	Data Strobe for DDR Data Bytes[23:16].
AA5	DDR_DQ[26]	DDR interface	Data Line. Interface to external RAM data lines.
AA6	DVDD_DDR	Power	DDR Interface Supply (1.8 V).
AA7	$\overline{\text{DDR_DQS[3]}}$	DDR interface	Data Strobe for DDR Data Bytes[31:24].
AA8	NC/GND	No connect/GND	For new ADV8003 designs, do not connect to this pin. For designs that must maintain consistency with the ADV8002, this pin can be grounded.
AA9	DDR_A[8]	DDR interface	Address Line. Interface to external RAM address lines.
AA10	DVDD_DDR	Power	DDR Interface Supply (1.8 V).
AA11	DDR_A[2]	DDR interface	Address Line. Interface to external RAM address lines.

Pin No.	Mnemonic	Type	Description
AA12	GND	GND	Ground.
AA13	DDR_$\overline{CS}$	DDR interface	DDR Chip Select. Interface to external DDR RAM chip selects.
AA14	DVDD_DDR	Power	DDR Interface Supply (1.8 V).
AA15	DDR_CK	DDR interface	DDR Memory Clock. Interface to external DDR RAM clock lines.
AA16	GND	GND	Ground.
AA17	DDR_DQ[11]	DDR interface	Data Line. Interface to external RAM data lines.
AA18	DVDD_DDR	Power	DDR Interface Supply (1.8 V).
AA19	DDR_DM[1]	DDR interface	Data Mask for Data Lines[15:8].
AA20	DDR_DM[0]	DDR interface	Data Mask for Data Lines[7:0].
AA21	GND	GND	Ground.
AA22	GND	GND	Ground.
AA23	DDR_DQ[3]	DDR interface	Data Line. Interface to external RAM data lines.
AB1	DDR_DQ[21]	DDR interface	Data Line. Interface to external RAM data lines.
AB2	DDR_DQ[19]	DDR interface	Data Line. Interface to external RAM data lines.
AB3	DDR_DQ[17]	DDR interface	Data Line. Interface to external RAM data lines.
AB4	DDR_DM[2]	DDR interface	Data Mask for Data Lines[23:16].
AB5	DDR_DQ[30]	DDR interface	Data Line. Interface to external RAM data lines.
AB6	DDR_DM[3]	DDR interface	Data Mask for Data Lines[31:25].
AB7	DDR_DQ[31]	DDR interface	Data Line. Interface to external RAM data lines.
AB8	DDR_DQ[29]	DDR interface	Data Line. Interface to external RAM data lines.
AB9	DDR_A[12]	DDR interface	Address Line. Interface to external RAM address lines.
AB10	DDR_A[6]	DDR interface	Address Line. Interface to external RAM address lines.
AB11	DDR_A[3]	DDR interface	Address Line. Interface to external RAM address lines.
AB12	DDR_A[0]	DDR interface	Address Line. Interface to external RAM address lines.
AB13	DDR_BA[0]	DDR interface	Bank Address Line. Indicates which data bank to write/read from.
AB14	$\overline{DDR_RAS}$	DDR interface	Row Address Strobe for DDR Memory.
AB15	DDR_CKE	DDR interface	Clock Enable for External DDR Memory.
AB16	DDR_DQ[12]	DDR interface	Data Line. Interface to external RAM data lines.
AB17	DDR_DQS[1]	DDR interface	Data Strobe for DDR Data Bytes[15:8].
AB18	DDR_DQ[8]	DDR interface	Data Line. Interface to external RAM data lines.
AB19	DDR_DQ[13]	DDR interface	Data Line. Interface to external RAM data lines.
AB20	DDR_DQ[0]	DDR interface	Data Line. Interface to external RAM data lines.
AB21	DDR_DQ[5]	DDR interface	Data Line. Interface to external RAM data lines.
AB22	DDR_DQS[0]	DDR interface	Data Strobe for DDR Data Bytes[7:0].
AB23	DDR_DQ[4]	DDR interface	Data Line. Interface to external RAM data lines.
AC1	DDR_DQ[16]	DDR interface	Data Line. Interface to external RAM data lines.
AC2	DDR_DQ[20]	DDR interface	Data Line. Interface to external RAM data lines.
AC3	DDR_DQ[22]	DDR interface	Data Line. Interface to external RAM data lines.
AC4	DDR_DQ[25]	DDR interface	Data Line. Interface to external RAM data lines.
AC5	DDR_DQ[28]	DDR interface	Data Line. Interface to external RAM data lines.
AC6	DDR_DQ[27]	DDR interface	Data Line. Interface to external RAM data lines.
AC7	DDR_DQ[24]	DDR interface	Data Line. Interface to external RAM data lines.
AC8	DDR_A[9]	DDR interface	Address Line. Interface to external RAM address lines.
AC9	DDR_A[5]	DDR interface	Address Line. Interface to external RAM address lines.
AC10	DDR_A[7]	DDR interface	Address Line. Interface to external RAM address lines.
AC11	DDR_A[1]	DDR interface	Address Line. Interface to external RAM address lines.
AC12	DDR_A[10]	DDR interface	Address Line. Interface to external RAM address lines.
AC13	DDR_BA[1]	DDR interface	Bank Address Line. Indicates which data bank to write/read from.
AC14	DDR_BA[2]	DDR interface	Bank Address Line. Indicates which data bank to write/read from.
AC15	DDR_$\overline{WE}$	DDR interface	Write Enable Signal for DDR RAM.
AC16	DDR_VREF	DDR interface[1]	Reference Voltage for DDR RAM.
AC17	DDR_DQ[10]	DDR interface	Data Line. Interface to external RAM data lines.
AC18	$\overline{DDR_DQS[1]}$	DDR interface	Data Strobe for DDR Data Bytes[15:8].
AC19	DDR_DQ[15]	DDR interface	Data Line. Interface to external RAM data lines.
AC20	DDR_DQ[7]	DDR interface	Data Line. Interface to external RAM data lines.

Pin No.	Mnemonic	Type	Description
AC21	DDR_DQ[2]	DDR interface	Data Line. Interface to external RAM data lines.
AC22	$\overline{\text{DDR_DQS[0]}}$	DDR interface	Data Strobe for DDR Data Bytes[7:0].
AC23	DDR_DQ[1]	DDR interface	Data Line. Interface to external RAM data lines.

[1] Sensitive node. Careful layout is important. The associated circuitry should be kept as close as possible to the ADV8003.

DESIGN CONSIDERATIONS

POWER-UP SEQUENCE

The power-up sequence of the ADV8003 is as follows:

1. Hold the $\overline{\text{RESET}}$ and PDN pins low.
2. Bring up the 3.3 V supplies (DVDD_IO, AVDD1, AVDD2).
3. A minimum delay of 20 ms is required from the point at which the 3.3 V reaches its minimum recommended value (that is, 3.14 V) before powering up the 1.8 V supplies.
4. Bring up the 1.8 V supplies (DVDD, PVDD1, PVDD2, PVDD3, PVDD5, PVDD6, CVDD1, AVDD3, DVDD_DDR, PVDD_DDR). These should be powered up together. That is, there should be a difference of less than 0.3 V between them.
5. $\overline{\text{RESET}}$ can be pulled high after supplies have been powered up.
6. A complete reset is recommended after power-up. This can be performed by the system microcontroller.

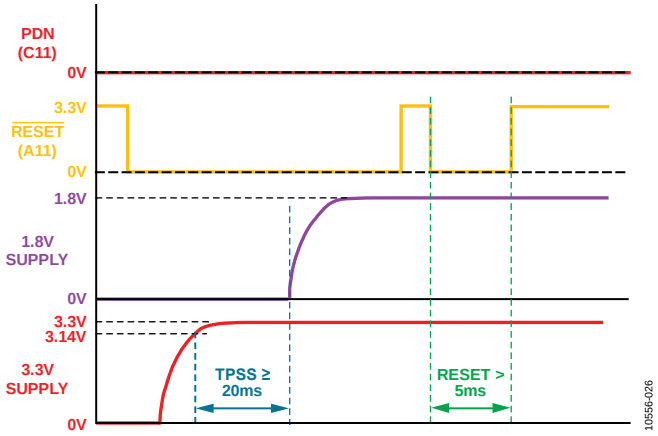

Figure 33. Supply Power-Up Sequence

THERMAL CONSIDERATIONS

The thermal performance of the ADV8003 is influenced by a number of factors, for example, power dissipation of the ADV8003, PCB design, and ambient temperature.

These factors, allied to any other application-specific factors that may affect the thermal performance of ADV8003, must be considered to ensure that the junction temperature of the ADV8003 does not exceed 125°C.

The flexibility of the ADV8003 can, in theory, result in the part being configured in modes where the junction temperature exceeds the maximum rated specification. To ensure that this does not happen, the ADV8003 must be characterized on the final customer PCB to ensure that maximum rated specifications are not exceeded in the planned modes of operation. Using fewer internal layers on a PCB reduces the amount of thermal conductivity between the ADV8003 and the PCB itself. This may necessitate some thermal management effort or affect the modes in which the ADV8003 can be configured.

Calculate thermal conductivity as follows:

1. Configure the ADV8003 in the highest required power mode of operation.
2. Measure the ambient temperature of the enclosure.
3. Measure the case temperature at the top of the ADV8003.

$$T_J = T_C + 5°C$$

$$T_{J\,MAX} = T_{A\,MAX} - T_A \text{ (actual)} + T_C \text{ (actual)} + 5°C$$

where:
T_J is the junction temperature (inside the ADV8003).
T_C is the case temperature (top surface of the ADV8003).
T_A is the ambient temperature (in the locality of the ADV8003).

Maximum specified $T_{A\,MAX}$ for the ADV8003 is 70°C. Depending on the result of the previous calculations/ measurement for the specific system, a lower $T_{A\,MAX}$ limit may need to be specified for that system to ensure that $T_{J\,MAX}$ remains safely below 125°C.

FUNCTIONAL OVERVIEW

VIDEO INPUT

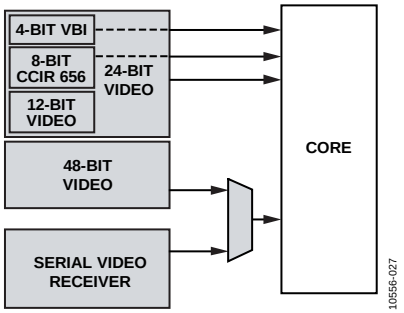

Figure 34. Digital Video Interface

The ADV8003 can receive data via the 48-bit input pixel port, the 24-bit OSD input port, or from the output of an HDMI transmitter.

The 48-bit input pixel port can receive data from an upstream analog/HDMI front-end device such as the ADV7619. This bus can accept multiple input formats in both RGB and YPrPb color spaces. Double data rate (DDR) input formats are also supported.

The 24-bit input pixel port can also receive video data from an upstream analog/HDMI front-end device such as the ADV7844 or OSD data from an external OSD generator. This bus can accept multiple input formats up to UXGA. DDR input formats are also supported. The video input on the 24-bit pixel port can be scaled and overlaid onto the main video path.

The serial video receiver can accept the output of an HDMI transmitter such as the ADV7511, ADV7623 or ADV7850. Using this configuration, the transceiver can extract HDMI audio for processing before reinsertion the audio into the ADV8003 via the audio pins, for output through the HDMI transmitters. This input does not support EDID or HDCP operations.

Picture-in-picture (PiP) support is possible when receiving video data on more than one of the video inputs, such as the 48-bit pixel port and the serial video receiver.

Flexible digital interface features include the following:

- (Up to) 48-bit pixel port for general video data
- (Up to) 24-bit pixel port for external OSD, if the ADV8003 internal OSD is not used
- Option to connect the output of HDMI transmitter

FLEXIBLE DIGITAL CORE

The ADV8003 has a flexible digital core that enables many different configurations of single, dual and triple video processing paths. Video processing can be placed first in the signal chain to ensure that all outputs are processed to the highest quality.

OSD can be placed at numerous locations within the signal chain to vary the number of outputs on which the OSD is displayed. PiP can also be supported via the OSD block, using a pixel port input that is connected to the OSD block. Several modes of operation are defined to help the user quickly integrate the ADV8003 into a system.

VIDEO SIGNAL PROCESSOR (VSP)

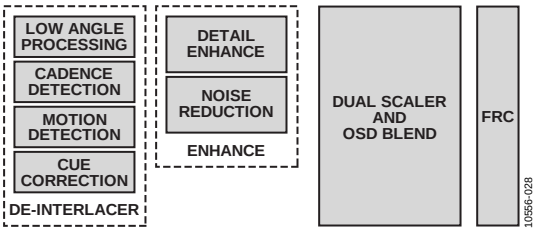

Figure 35. Video Processing

The ADV8003 offers video de-interlacing and scaling. The de-interlacer, located in the primary VSP, is motion adaptive and offers high performance on low angle edges. It can support input video resolutions of 480i, 576i, and 1080i.

The dual scalers in the ADV8003 support the Analog Devices proprietary scaling algorithm, which provides very high quality video upscaling and downscaling. This scaling algorithm helps eradicate many of the common problems that are encountered when scaling video data, such as saw tooth, edge blurring, and ringing.

The primary and secondary scalers are capable of up- and down-scaling between a range of SD and HD video resolutions (for example, 480p, 576p, 720p, and 1080p). The primary scaler in the ADV8003KBCZ-8/ADV8003KBCZ-8B/ADV8003KBCZ-8C models is capable of upscaling to 4k × 2k video resolutions.

Cadence detection and frame rate conversion are also supported in the ADV8003, which allows film formats to be displayed at their native frame rate, as well as being converted to the native refresh rate of the TV. Additional video processing in the ADV8003 helps with reduction of common video artifacts such as mosquito, random, and block noise. The ADV8003 also includes an aspect ratio converter, as well as a panorama mode feature.

The following VSP features are included:

- High performance motion adaptive SD/HD de-interlacer and scaler
- Two scalers, allowing independent scaling on ADV8003 outputs
- Frame rate converter, supporting conversion between multiple frame rates (23.976 Hz, 24 Hz, 25 Hz, 29.97 Hz, 30 Hz, 50 Hz, 59.94 Hz, and 60 Hz)
- Noise reduction, which helps with the reduction of random, block, and mosquito noise
- Five manually programmable color space converters that are distributed between inputs and outputs

ON-SCREEN DISPLAY (OSD)

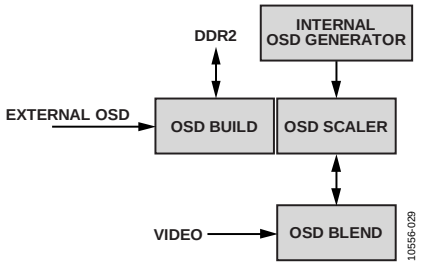

Figure 36. Bitmap OSD

The ADV8003 incorporates a bitmap-based OSD block that allows users to create impressive OSD designs that can include bitmap images, as well as motion and animation. Individual regions of the OSD can be alpha blended and prioritized over other regions.

An OSD development tool, Blimp, is provided to assist in the design and development of custom OSDs and to abstract the OSD hardware from the user. This tool automatically generates two design elements: a design resource containing character sets and images that must be downloaded to an external SPI flash on the board; and code that must be integrated with system APIs to link the functionality of the OSD with the functionality of the system.

The OSD design resource is loaded into external DDR2 memories on power-up by the OSD coprocessor of the ADV8003. This coprocessor is responsible for handling upper level commands from the user and translating them into lower level operations for the OSD and DMA.

OSD features include the following:

- Pixel-by-pixel alpha blending and priority levels assigned to the different OSD components
- A high performance OSD scaler allows the rendering of OSDs at a single resolution, as well as blending at different resolutions

EXTERNAL DDR2 MEMORY

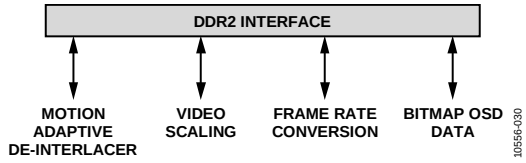

Figure 37. External DDR2 Memory Interface

External DDR2 memory is required for motion adaptive de-interlacing, scaling, frame rate conversion, and bitmap OSD overlay. The bandwidth of external memory required is determined by the input video formats that the ADV8003 must support, as well as the level of video processing required (scaling, conversion, and OSD). Depending on the input video resolution and video processing options, one or two DDR2 memories may be required.

HDMI TRANSMITTERS

The ADV8003 features dual HDMI transmitters. The transmitters provided on the ADV8003KBCZ-8/ADV8003KBCZ-8B/ ADV8003KBCZ-8C support all HDTV formats up to 4k × 2k; the transmitters on the ADV8003KBCZ-7/ADV8003KBCZ-7B/ ADV8003KBCZ-7C/ADV8003KBCZ-7T support all HDTV formats up to 1080p. All parts support all of the mandatory and many of the optional 3D formats, and audio return channel (ARC), which allows an S/PDIF audio connection between the source and sink. Each HDMI transmitter features a full function CEC master and on-chip MPUs with DDC I^2C masters to perform HDCP operations and EDID operations.

HDMI Tx features include the following:

- Audio return channel (ARC) support
- Mandatory 3D formats and many optional 3D formats
- Content type bits
- CEC controller
- HDMI audio interface and support for multiple audio formats (S/PDIF, I^2S, DSD)

VIDEO ENCODER

The ADV8003 features a high speed digital-to-analog video encoder. Six 12-bit NSV, 3.3 V video DACs provide support for worldwide composite (CVBS), S-Video (Y-C), and component (YPrPb/RGB) analog outputs in standard definition (SD), enhanced definition (ED), or high definition (HD) video formats. It is also possible to enable the video encoder of the ADV8003 to work in simultaneous modes where both an SD and ED/HD formats are output.

Encoder features include the following:

- Six 12-bit NSV video DACs capable of outputting video standards of up to 1080p with additional oversampling
- Multiformat video output support; composite (CVBS), S-Video (Y-C), component YPrPb (SD, ED and HD), and component RGB (SD, ED and HD)
- Simultaneous SD and ED/HD operation
- Copy generation management system (CGMS)
- Closed captioning and widescreen signaling (WSS)
- Rovi® Rev. 7.1.L1 (SD) and Rev. 1.4 (ED) compliant

PROFESSIONAL CONFIGURATION

To accommodate professional applications where HDMI and analog video output are not desired, the ADV8003 offers a 30-bit TTL input, 30-bit TTL output mode. This mode suits applications where a video signal processor is required between two TTL interfaces (for example, an HDMI receiver and an FPGA).

REGISTER MAP ARCHITECTURE

The registers of the ADV8003 are controlled via a 2-wire serial (I^2C-compatible) interface. Addressing in the ADV8003 is 16-bit with 8-bit data. This means that I^2C writes to the part are in the following form: <I^2C Address>, <Address MSBs>, <Address LSBs>, <Data>.

For example, to write 0xFF to the encoder register map, which is Register 0xE4AF, the bytes sent over the I^2C interface are: 0x1A, 0xE4, 0xAF, 0xFF. The addresses are outlined in Table 10. Figure 38 shows the register map architecture for the ADV8003.

The ADV8003 also has a number of SPI register maps used for OSD functions. These are accessed through the APIs defined in the Blimp software tool.

Table 10. ADV8003 I^2C Address and Register Address Range for the Different HW Blocks

Register Map Name	I^2C Address	Register Address
IO Map	0x1A (when the ALSB pin is set high) or 0x18 (when the ALSB pin is set low)	0x1A00 to 0x1BFF
Primary VSP Map 1		0xE800 to 0xE8FF
Primary VSP Map 2		0xE900 to 0xE9FF
Secondary VSP Map		0xE600 to 0xE6FF
DPLL Map		0xE000 to 0xE0FF
Rx Main Map		0xE200 to 0xE2FF
Rx InfoFrame Map		0xE300 to 0xE3FF
Encoder Map		0xE400 to 0xE4FF
Tx1 Main Map		0xEC00 to 0xECFF
Tx1 EDID Map		0xEE00 to 0xEEFF
Tx1 CEC Map		0xF000 to 0xF0FF
Tx1 UDP Map		0xF200 to 0xF2FF
Tx1 Test Map		0xF300 to 0xF3FF
Tx2 Main Map		0xF400 to 0xF4FF
Tx2 EDID Map		0xF600 to 0xF6FF
Tx2 CEC Map		0xF800 to 0xF8FF
Tx2 UDP Map		0xFA00 to 0xFAFF
Tx2 Test Map		0xFB00 to 0xFBFF

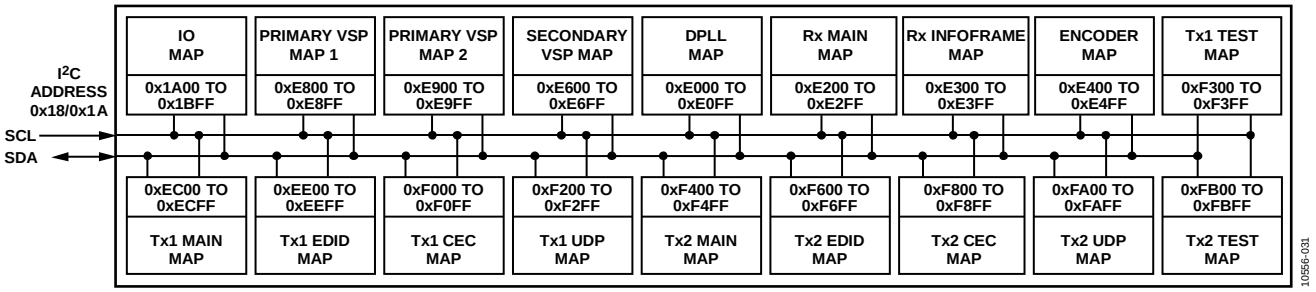

Figure 38. Register Map Architecture

TYPICAL APPLICATIONS DIAGRAM

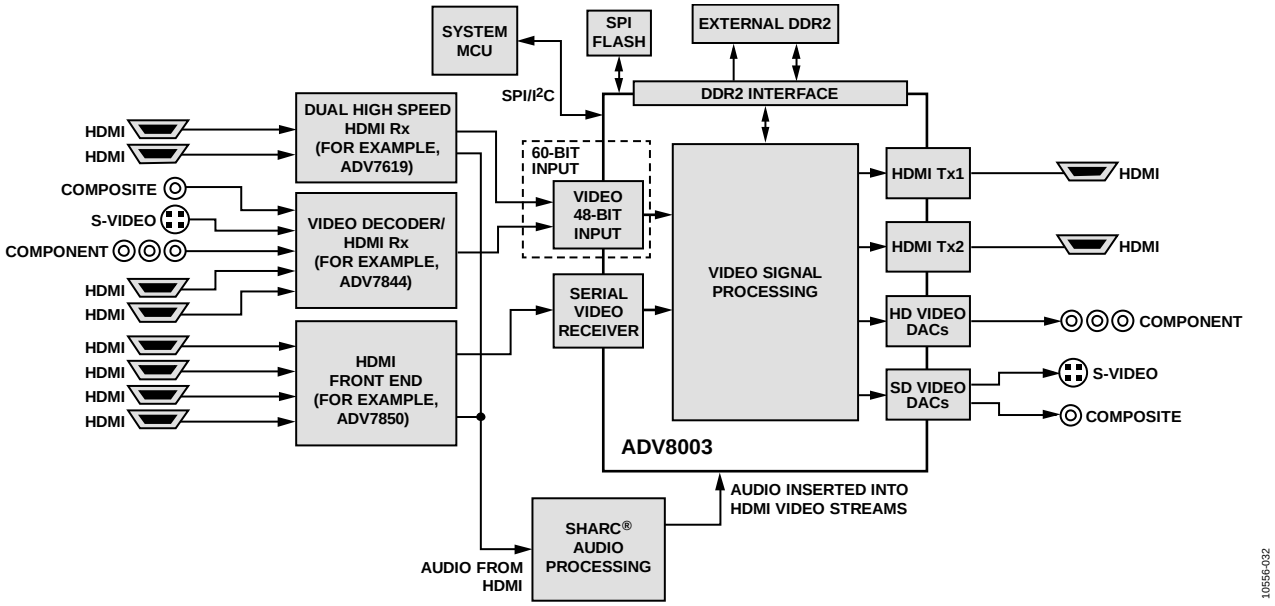

Figure 39. System Block Diagram

OUTLINE DIMENSIONS

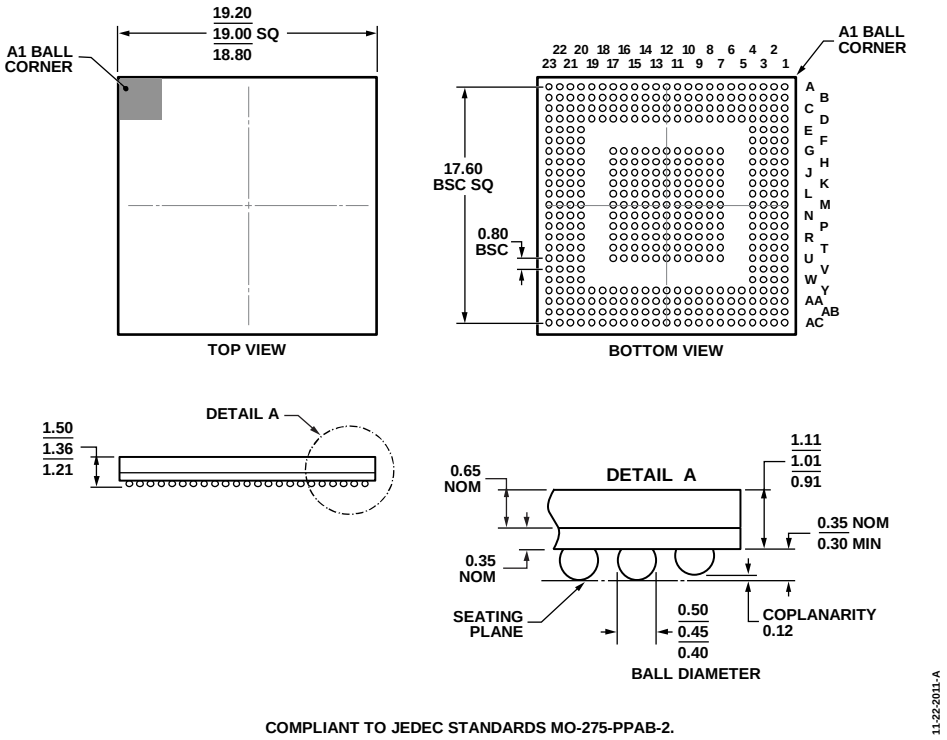

COMPLIANT TO JEDEC STANDARDS MO-275-PPAB-2.

Figure 40. 425-Ball Chip Scale Package Ball Grid Array [CSP_BGA]
(BC-425-1)
Dimensions shown in millimeters

ORDERING GUIDE

Model[1, 2]	Temperature Range	Package Description	Package Option
ADV8003KBCZ-8	0°C to 70°C	425-Ball Chip Scale Package Ball Grid Array [CSP_BGA]	BC-425-1
ADV8003KBCZ-8B	0°C to 70°C	425-Ball Chip Scale Package Ball Grid Array [CSP_BGA]	BC-425-1
ADV8003KBCZ-8C	0°C to 70°C	425-Ball Chip Scale Package Ball Grid Array [CSP_BGA]	BC-425-1
ADV8003KBCZ-7	0°C to 70°C	425-Ball Chip Scale Package Ball Grid Array [CSP_BGA]	BC-425-1
ADV8003KBCZ-7B	0°C to 70°C	425-Ball Chip Scale Package Ball Grid Array [CSP_BGA]	BC-425-1
ADV8003KBCZ-7C	0°C to 70°C	425-Ball Chip Scale Package Ball Grid Array [CSP_BGA]	BC-425-1
ADV8003KBCZ-7T	0°C to 70°C	425-Ball Chip Scale Package Ball Grid Array [CSP_BGA]	BC-425-1
EVAL-ADV8003-SMZ-P		ADV8003KBCZ-7C Evaluation Board	

[1] Z = RoHS Compliant Part.
[2] The evaluation board does not require HDCP or Rovi licensing.

I²C refers to a communications protocol originally developed by Philips Semiconductors (now NXP Semiconductors).
HDMI, the HDMI Logo, and High-Definition Multimedia Interface are trademarks or registered trademarks of HDMI Licensing LLC in the United States and other countries.

©2012–2013 Analog Devices, Inc. All rights reserved. Trademarks and registered trademarks are the property of their respective owners.
D10556-0-8/13(B)