Triple-Channel Digital Isolators

Data Sheet

ADuM1310/ADuM1311

FEATURES

- Low power operation
  - 5 V operation
    - 1.7 mA per channel maximum at 0 Mbps to 2 Mbps
    - 4.0 mA per channel maximum at 2 Mbps to 10 Mbps
  - 3 V operation
    - 1.0 mA per channel maximum at 0 Mbps to 2 Mbps
    - 2.1 mA per channel maximum at 2 Mbps to 10 Mbps
- Bidirectional communication
- 3 V/5 V level translation
- Schmitt trigger inputs
- High temperature operation: 105°C
- Up to 10 Mbps data rate (NRZ)
- Programmable default output state
- High common-mode transient immunity: >25 kV/µs
- 16-lead, RoHS-compliant, SOIC wide body package
- 8.1 mm external creepage
- Safety and regulatory approvals
  - UL recognition: 3750 V rms for 1 minute per UL 1577
  - CSA Component Acceptance Notice #5A
  - VDE certificate of conformity
    - DIN V VDE V 0884-10 (VDE V 0884-10): 2006-12
    - V_{IORM} = 560 V peak working voltage

APPLICATIONS

- General-purpose multichannel isolation
- SPI interface/data converter isolation
- RS-232/RS-422/RS-485 transceiver
- Industrial field bus isolation

FUNCTIONAL BLOCK DIAGRAMS

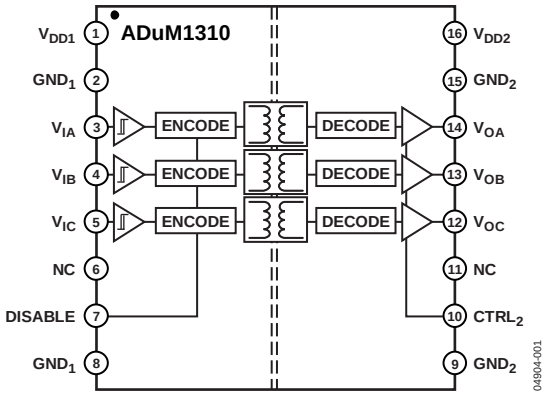

Figure 1. ADuM1310

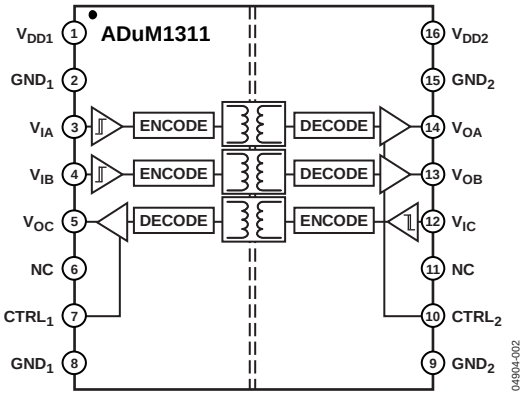

Figure 2. ADuM1311

GENERAL DESCRIPTION

The ADuM1310/ADuM1311[1] are 3-channel digital isolators based on Analog Devices, Inc., *i*Coupler® technology. Combining high speed CMOS and monolithic air core transformer technology, these isolation components provide outstanding performance characteristics superior to alternatives such as optocoupler devices.

By avoiding the use of LEDs and photodiodes, *i*Coupler devices remove the design difficulties commonly associated with optocouplers. The typical optocoupler concerns regarding uncertain current transfer ratios, maximum operating temperature, and lifetime effects are eliminated with the simple *i*Coupler digital interfaces and stable performance characteristics. The need for external drivers and other discrete components is eliminated with these *i*Coupler products. Furthermore, *i*Coupler devices consume one-tenth to one-sixth the power of optocouplers at comparable signal data rates. The *i*Coupler also offers higher channel densities and more options for channel directionality.

The ADuM1310/ADuM1311 isolators provide three independent isolation channels in a variety of channel configurations and data rates up to 10 Mbps (see the Ordering Guide). All models operate with the supply voltage on either side ranging from 2.7 V to 5.5 V, providing compatibility with lower voltage systems as well as enabling voltage translation functionality across the isolation barrier. All products allow the user to predetermine the default output state in the absence of input V_{DD1} power with a simple control pin. Unlike other optocoupler alternatives, the ADuM1310/ADuM1311 isolators have a patented refresh feature that ensures dc correctness in the absence of input logic transitions and during power-up/ power-down conditions.

[1] Protected by U.S. Patents 5,952,849; 6,873,065; 6,903,578; and 7,075,329. Other patents pending.

Rev. J
Document Feedback
Information furnished by Analog Devices is believed to be accurate and reliable. However, no responsibility is assumed by Analog Devices for its use, nor for any infringements of patents or other rights of third parties that may result from its use. Specifications subject to change without notice. No license is granted by implication or otherwise under any patent or patent rights of Analog Devices. Trademarks and registered trademarks are the property of their respective owners.

One Technology Way, P.O. Box 9106, Norwood, MA 02062-9106, U.S.A.
Tel: 781.329.4700 ©2005–2014 Analog Devices, Inc. All rights reserved.
Technical Support www.analog.com

TABLE OF CONTENTS

Features ... 1
Applications ... 1
Functional Block Diagrams ... 1
General Description ... 1
Revision History ... 2
Specifications ... 3
Electrical Characteristics—5 V Operation ... 3
Electrical Characteristics—3 V Operation ... 5
Electrical Characteristics—Mixed 5 V/3 V or 3 V/5 V Operation ... 7
Package Characteristics ... 10
Regulatory Information ... 10
Insulation and Safety-Related Specifications ... 10
DIN V VDE V 0884-10 (VDE V 0884-10): 2006-12 Insulation Characteristics ... 11
Recommended Operating Conditions ... 11
Absolute Maximum Ratings ... 12
ESD Caution ... 12
Pin Configurations and Function Descriptions ... 13
Typical Performance Characteristics ... 16
Applications Information ... 18
PC Board Layout ... 18
Propagation Delay-Related Parameters ... 18
DC Correctness and Magnetic Field Immunity ... 18
Power Consumption ... 19
Insulation Lifetime ... 20
Outline Dimensions ... 21
Ordering Guide ... 21

REVISION HISTORY

9/14—Rev. I to Rev. J

Changes to Features Section ... 1
Changes to Table 5 and Table 6 ... 10

4/14—Rev. H to Rev. I

Change to Table 5 ... 10

3/12—Rev. G to Rev. H

Created Hyperlink for Safety and Regulatory Approvals Entry in Features Section ... 1
Change to PC Board Layout Section ... 18
Updated Outline Dimensions ... 21

6/07—Rev. F to Rev. G

Updated VDE Certification Throughout ... 1
Changes to Features and Applications ... 1
Changes to DC Specifications in Table 1 ... 3
Changes to DC Specifications in Table 2 ... 5
Changes to DC Specifications in Table 3 ... 7
Changes to Regulatory Information Section ... 10
Added Table 10 ... 12
Added Insulation Lifetime Section ... 19

1/07—Rev. E to Rev. F

Added ADuM1311 ... Universal
Changes to Typical Performance Characteristics Section ... 16
Changes to Ordering Guide ... 20

10/06—Rev. D to Rev. E

Removed ADuM1410 ... Universal
Updated Format ... Universal
Change to Figure 3 ... 10
Changes to Table 10 ... 10
Changes to Application Information Section ... 12
Updated Outline Dimensions ... 18
Changes to Ordering Guide ... 18

3/06—Rev. C to Rev. D

Added Note 1; Changes to Figure 2 ... 1
Changes to Absolute Maximum Ratings ... 11

11/05—Revision C: Initial Version

SPECIFICATIONS

ELECTRICAL CHARACTERISTICS—5 V OPERATION

4.5 V ≤ V_{DD1} ≤ 5.5 V, 4.5 V ≤ V_{DD2} ≤ 5.5 V; all minimum/maximum specifications apply over the entire recommended operation range, unless otherwise noted; all typical specifications are at T_A = 25°C, V_{DD1} = V_{DD2} = 5 V. All voltages are relative to their respective grounds.

Table 1.

Parameter	Symbol	Min	Typ	Max	Unit	Test Conditions
DC SPECIFICATIONS						
ADuM1310, Total Supply Current, Three Channels[1]						
DC to 2 Mbps						
V_{DD1} Supply Current	$I_{DD1 (Q)}$		2.4	3.2	mA	DC to 1 MHz logic signal frequency
V_{DD2} Supply Current	$I_{DD2 (Q)}$		1.2	1.6	mA	DC to 1 MHz logic signal frequency
10 Mbps (BRWZ Grade Only)						
V_{DD1} Supply Current	$I_{DD1 (10)}$		6.6	9.0	mA	5 MHz logic signal frequency
V_{DD2} Supply Current	$I_{DD2 (10)}$		2.1	3.0	mA	5 MHz logic signal frequency
ADuM1311, Total Supply Current, Three Channels[1]						
DC to 2 Mbps						
V_{DD1} Supply Current	$I_{DD1 (Q)}$		2.2	2.8	mA	DC to 1 MHz logic signal frequency
V_{DD2} Supply Current	$I_{DD2 (Q)}$		1.8	2.4	mA	DC to 1 MHz logic signal frequency
10 Mbps (BRWZ Grade Only)						
V_{DD1} Supply Current	$I_{DD1 (10)}$		4.5	5.7	mA	5 MHz logic signal frequency
V_{DD2} Supply Current	$I_{DD2 (10)}$		3.5	4.3	mA	5 MHz logic signal frequency
For All Models						
Input Currents	I_{IA}, I_{IB}, I_{IC}, I_{CTRL1}, I_{CTRL2}, $I_{DISABLE}$	−10	+0.01	+10	μA	0 V ≤ V_{IA}, V_{IB}, V_{IC} ≤ V_{DD1} or V_{DD2}, 0 V ≤ V_{CTRL1}, V_{CTRL2} ≤ V_{DD1} or V_{DD2}, 0 V ≤ $V_{DISABLE}$ ≤ V_{DD1}
Logic High Input Threshold	V_{IH}	2.0			V	
Logic Low Input Threshold	V_{IL}			0.8	V	
Logic High Output Voltages	V_{OAH}, V_{OBH}, V_{OCH}	(V_{DD1} or V_{DD2}) − 0.1	5.0		V	I_{Ox} = −20 μA, V_{Ix} = V_{IxH}
		(V_{DD1} or V_{DD2}) − 0.4	4.8		V	I_{Ox} = −4 mA, V_{Ix} = V_{IxH}
Logic Low Output Voltages	V_{OAL}, V_{OBL}, V_{OCL}		0.0	0.1	V	I_{Ox} = 20 μA, V_{Ix} = V_{IxL}
			0.2	0.4	V	I_{Ox} = 4 mA, V_{Ix} = V_{IxL}
SWITCHING SPECIFICATIONS						
ADuM131xARWZ						
Minimum Pulse Width[2]	PW			1000	ns	C_L = 15 pF, CMOS signal levels
Maximum Data Rate[3]		1			Mbps	C_L = 15 pF, CMOS signal levels
Propagation Delay[4]	t_{PHL}, t_{PLH}	20		100	ns	C_L = 15 pF, CMOS signal levels
Pulse Width Distortion, $\|t_{PLH} - t_{PHL}\|$[4]	PWD			40	ns	C_L = 15 pF, CMOS signal levels
Propagation Delay Skew[5]	t_{PSK}			50	ns	C_L = 15 pF, CMOS signal levels
Channel-to-Channel Matching[6]	$t_{PSKCD/OD}$			50	ns	C_L = 15 pF, CMOS signal levels
ADuM131xBRWZ						
Minimum Pulse Width[2]	PW			100	ns	C_L = 15 pF, CMOS signal levels
Maximum Data Rate[3]		10			Mbps	C_L = 15 pF, CMOS signal levels
Propagation Delay[4]	t_{PHL}, t_{PLH}	20	30	50	ns	C_L = 15 pF, CMOS signal levels
Pulse Width Distortion, $\|t_{PLH} - t_{PHL}\|$[4]	PWD			5	ns	C_L = 15 pF, CMOS signal levels
Change vs. Temperature			5		ps/°C	C_L = 15 pF, CMOS signal levels
Propagation Delay Skew[5]	t_{PSK}			30	ns	C_L = 15 pF, CMOS signal levels

Parameter	Symbol	Min	Typ	Max	Unit	Test Conditions
Channel-to-Channel Matching, Codirectional Channels[6]	t_{PSKCD}			5	ns	C_L = 15 pF, CMOS signal levels
Channel-to-Channel Matching, Opposing-Directional Channels[6]	t_{PSKOD}			6	ns	C_L = 15 pF, CMOS signal levels
For All Models						
Output Rise/Fall Time (10% to 90%)	t_R/t_F		2.5		ns	C_L = 15 pF, CMOS signal levels
Common-Mode Transient Immunity at Logic High Output[7]	$\|CM_H\|$	25	35		kV/µs	$V_{Ix} = V_{DD1}$ or V_{DD2}, V_{CM} = 1000 V, transient magnitude = 800 V
Common-Mode Transient Immunity at Logic Low Output[7]	$\|CM_L\|$	25	35		kV/µs	V_{Ix} = 0 V, V_{CM} = 1000 V, transient magnitude = 800 V
Refresh Rate	f_r		1.2		Mbps	
Input Enable Time[8]	t_{ENABLE}			2.0	µs	V_{IA}, V_{IB}, V_{IC} = 0 V or V_{DD1}
Input Disable Time[8]	$t_{DISABLE}$			5.0	µs	V_{IA}, V_{IB}, V_{IC} = 0 V or V_{DD1}
Input Supply Current per Channel, Quiescent[9]	$I_{DDI (Q)}$		0.50	0.73	mA	
Output Supply Current per Channel, Quiescent[9]	$I_{DDO (Q)}$		0.38	0.53	mA	
Input Dynamic Supply Current per Channel[10]	$I_{DDI (D)}$		0.12		mA/ Mbps	
Output Dynamic Supply Current per Channel[10]	$I_{DDO (D)}$		0.04		mA/ Mbps	

[1] The supply current values for all four channels are combined when running at identical data rates. Output supply current values are specified with no output load present. The supply current associated with an individual channel operating at a given data rate can be calculated as described in the Power Consumption section. See Figure 6 through Figure 8 for information on per-channel supply current as a function of data rate for unloaded and loaded conditions. See Figure 9 through Figure 12 for total V_{DD1} and V_{DD2} supply currents as a function of data rate for ADuM1310/ADuM1311 channel configurations.

[2] The minimum pulse width is the shortest pulse width at which the specified pulse width distortion is guaranteed.

[3] The maximum data rate is the fastest data rate at which the specified pulse width distortion is guaranteed.

[4] t_{PHL} propagation delay is measured from the 50% level of the falling edge of the V_{Ix} signal to the 50% level of the falling edge of the V_{Ox} signal. t_{PLH} propagation delay is measured from the 50% level of the rising edge of the V_{Ix} signal to the 50% level of the rising edge of the V_{Ox} signal.

[5] t_{PSK} is the magnitude of the worst-case difference in t_{PHL} or t_{PLH} that is measured between units at the same operating temperature, supply voltages, and output load within the recommended operating conditions.

[6] Codirectional channel-to-channel matching is the absolute value of the difference in propagation delays between any two channels with inputs on the same side of the isolation barrier. Opposing-directional channel-to-channel matching is the absolute value of the difference in propagation delays between any two channels with inputs on opposing sides of the isolation barrier.

[7] CM_H is the maximum common-mode voltage slew rate that can be sustained while maintaining $V_O > 0.8\ V_{DD2}$. CM_L is the maximum common-mode voltage slew rate that can be sustained while maintaining $V_O < 0.8$ V. The common-mode voltage slew rates apply to both rising and falling common-mode voltage edges. The transient magnitude is the range over which the common mode is slewed.

[8] Input enable time is the duration from when $V_{DISABLE}$ is set low until the output states are guaranteed to match the input states in the absence of any input data logic transitions. If an input data logic transition within a given channel does occur within this time interval, the output of that channel reaches the correct state within the much shorter duration, as determined by the propagation delay specifications within this data sheet. Input disable time is the duration from when $V_{DISABLE}$ is set high until the output states are guaranteed to reach their programmed output levels, as determined by the $CTRL_2$ logic state (see Table 13).

[9] $I_{DDx (Q)}$ is the quiescent current drawn from the corresponding supply by a single channel. To calculate the total quiescent current, an additional inaccessible channel in the same orientation as Channel A must be included to account for the total current consumed.

[10] Dynamic supply current is the incremental amount of supply current required for a 1 Mbps increase in signal data rate. See Figure 6 through Figure 8 for information on per-channel supply current for unloaded and loaded conditions. See the Power Consumption section for guidance on calculating the per-channel supply current for a given data rate.

ELECTRICAL CHARACTERISTICS—3 V OPERATION

2.7 V ≤ V_{DD1} ≤ 3.6 V, 2.7 V ≤ V_{DD2} ≤ 3.6 V; all minimum/maximum specifications apply over the entire recommended operation range, unless otherwise noted; all typical specifications are at T_A = 25°C, V_{DD1} = V_{DD2} = 3.0 V. All voltages are relative to their respective ground.

Table 2.

Parameter	Symbol	Min	Typ	Max	Unit	Test Conditions
DC SPECIFICATIONS						
ADuM1310, Total Supply Current, Three Channels[1]						
DC to 2 Mbps						
V_{DD1} Supply Current	$I_{DD1 (Q)}$		1.2	1.6	mA	DC to 1 MHz logic signal frequency
V_{DD2} Supply Current	$I_{DD2 (Q)}$		0.8	1.0	mA	DC to 1 MHz logic signal frequency
10 Mbps (BRWZ Grade Only)						
V_{DD1} Supply Current	$I_{DD1 (10)}$		3.4	4.9	mA	5 MHz logic signal frequency
V_{DD2} Supply Current	$I_{DD2 (10)}$		1.1	1.3	mA	5 MHz logic signal frequency
ADuM1311, Total Supply Current, Three Channels[1]						
DC to 2 Mbps						
V_{DD1} Supply Current	$I_{DD1 (Q)}$		1.0	1.6	mA	DC to 1 MHz logic signal frequency
V_{DD2} Supply Current	$I_{DD2 (Q)}$		0.9	1.4		DC to 1 MHz logic signal frequency
10 Mbps (BRWZ Grade Only)						
V_{DD1} Supply Current	$I_{DD1 (10)}$		2.5	3.5	mA	5 MHz logic signal frequency
V_{DD2} Supply Current	$I_{DD2 (10)}$		1.9	2.6		5 MHz logic signal frequency
For All Models						
Input Currents	I_{IA}, I_{IB}, I_{IC}, I_{CTRL1}, I_{CTRL2}, $I_{DISABLE}$	−10	+0.01	+10	μA	0 V ≤ V_{IA}, V_{IB}, V_{IC} ≤ V_{DD1} or V_{DD2}, 0 V ≤ V_{CTRL1}, V_{CTRL2} ≤ V_{DD1} or V_{DD2}, 0 V ≤ $V_{DISABLE}$ ≤ V_{DD1}
Logic High Input Threshold	V_{IH}	1.6			V	
Logic Low Input Threshold	V_{IL}			0.4	V	
Logic High Output Voltages	V_{OAH}, V_{OBH}, V_{OCH}	(V_{DD1} or V_{DD2}) − 0.1	3.0		V	I_{Ox} = −20 μA, V_{Ix} = V_{IxH}
		(V_{DD1} or V_{DD2}) − 0.4	2.8		V	I_{Ox} = −4 mA, V_{Ix} = V_{IxH}
Logic Low Output Voltages	V_{OAL}, V_{OBL}, V_{OCL}		0.0	0.1	V	I_{Ox} = 20 μA, V_{Ix} = V_{IxL}
			0.2	0.4	V	I_{Ox} = 4 mA, V_{Ix} = V_{IxL}
SWITCHING SPECIFICATIONS						
ADuM131xARWZ						
Minimum Pulse Width[2]	PW			1000	ns	C_L = 15 pF, CMOS signal levels
Maximum Data Rate[3]		1			Mbps	C_L = 15 pF, CMOS signal levels
Propagation Delay[4]	t_{PHL}, t_{PLH}	20		100	ns	C_L = 15 pF, CMOS signal levels
Pulse Width Distortion, $\|t_{PLH} - t_{PHL}\|$[4]	PWD			40	ns	C_L = 15 pF, CMOS signal levels
Propagation Delay Skew[5]	t_{PSK}			50	ns	C_L = 15 pF, CMOS signal levels
Channel-to-Channel Matching[6]	$t_{PSKCD/OD}$			50	ns	C_L = 15 pF, CMOS signal levels
ADuM131xBRWZ						
Minimum Pulse Width[2]	PW			100	ns	C_L = 15 pF, CMOS signal levels
Maximum Data Rate[3]		10			Mbps	C_L = 15 pF, CMOS signal levels
Propagation Delay[4]	t_{PHL}, t_{PLH}	20	30	50	ns	C_L = 15 pF, CMOS signal levels
Pulse Width Distortion, $\|t_{PLH} - t_{PHL}\|$[4]	PWD			5	ns	C_L = 15 pF, CMOS signal levels
Change vs. Temperature			5		ps/°C	C_L = 15 pF, CMOS signal levels
Propagation Delay Skew[5]	t_{PSK}			30	ns	C_L = 15 pF, CMOS signal levels
Channel-to-Channel Matching, Codirectional Channels[6]	t_{PSKCD}			5	ns	C_L = 15 pF, CMOS signal levels
Channel-to-Channel Matching, Opposing-Directional Channels[6]	t_{PSKOD}			6	ns	C_L = 15 pF, CMOS signal levels

Parameter	Symbol	Min	Typ	Max	Unit	Test Conditions
For All Models						
Output Rise/Fall Time (10% to 90%)	t_R/t_F		2.5		ns	C_L = 15 pF, CMOS signal levels
Common-Mode Transient Immunity at Logic High Output[7]	$\|CM_H\|$	25	35		kV/µs	$V_{Ix} = V_{DD1}$ or V_{DD2}, V_{CM} = 1000 V, transient magnitude = 800 V
Common-Mode Transient Immunity at Logic Low Output[7]	$\|CM_L\|$	25	35		kV/µs	V_{Ix} = 0 V, V_{CM} = 1000 V, transient magnitude = 800 V
Refresh Rate	f_r		1.1		Mbps	
Input Enable Time[8]	t_{ENABLE}		2.0		µs	V_{IA}, V_{IB}, V_{IC} = 0 V or V_{DD1}
Input Disable Time[8]	$t_{DISABLE}$		5.0		µs	V_{IA}, V_{IB}, V_{IC} = 0 V or V_{DD1}
Input Supply Current per Channel, Quiescent[9]	$I_{DDI (Q)}$		0.25	0.38	mA	
Output Supply Current per Channel, Quiescent[9]	$I_{DDO (Q)}$		0.19	0.33	mA	
Input Dynamic Supply Current per Channel[10]	$I_{DDI (D)}$		0.07		mA/ Mbps	
Output Dynamic Supply Current per Channel[10]	$I_{DDO (D)}$		0.02		mA/ Mbps	

[1] The supply current values for all four channels are combined when running at identical data rates. Output supply current values are specified with no output load present. The supply current associated with an individual channel operating at a given data rate can be calculated as described in the Power Consumption section. See Figure 6 through Figure 8 for information on per-channel supply current as a function of data rate for unloaded and loaded conditions. See Figure 9 through Figure 12 for total V_{DD1} and V_{DD2} supply currents as a function of data rate for ADuM1310/ADuM1311 channel configurations.

[2] The minimum pulse width is the shortest pulse width at which the specified pulse width distortion is guaranteed.

[3] The maximum data rate is the fastest data rate at which the specified pulse width distortion is guaranteed.

[4] t_{PHL} propagation delay is measured from the 50% level of the falling edge of the V_{Ix} signal to the 50% level of the falling edge of the V_{Ox} signal. t_{PLH} propagation delay is measured from the 50% level of the rising edge of the V_{Ix} signal to the 50% level of the rising edge of the V_{Ox} signal.

[5] t_{PSK} is the magnitude of the worst-case difference in t_{PHL} or t_{PLH} that is measured between units at the same operating temperature, supply voltages, and output load within the recommended operating conditions.

[6] Codirectional channel-to-channel matching is the absolute value of the difference in propagation delays between any two channels with inputs on the same side of the isolation barrier. Opposing-directional channel-to-channel matching is the absolute value of the difference in propagation delays between any two channels with inputs on opposing sides of the isolation barrier.

[7] CM_H is the maximum common-mode voltage slew rate that can be sustained while maintaining $V_O > 0.8\ V_{DD2}$. CM_L is the maximum common-mode voltage slew rate that can be sustained while maintaining $V_O < 0.8$ V. The common-mode voltage slew rates apply to both rising and falling common-mode voltage edges. The transient magnitude is the range over which the common mode is slewed.

[8] Input enable time is the duration from when $V_{DISABLE}$ is set low until the output states are guaranteed to match the input states in the absence of any input data logic transitions. If an input data logic transition within a given channel does occur within this time interval, the output of that channel reaches the correct state within the much shorter duration, as determined by the propagation delay specifications within this data sheet. Input disable time is the duration from when $V_{DISABLE}$ is set high until the output states are guaranteed to reach their programmed output levels, as determined by the $CTRL_2$ logic state (see Table 13).

[9] $I_{DDx (Q)}$ is the quiescent current drawn from the corresponding supply by a single channel. To calculate the total quiescent current, an additional inaccessible channel in the same orientation as Channel A must be included to account for the total current consumed.

[10] Dynamic supply current is the incremental amount of supply current required for a 1 Mbps increase in signal data rate. See Figure 6 through Figure 8 for information on per-channel supply current for unloaded and loaded conditions. See the Power Consumption section for guidance on calculating the per-channel supply current for a given data rate.

ELECTRICAL CHARACTERISTICS—MIXED 5 V/3 V OR 3 V/5 V OPERATION

5 V/3 V operation: 4.5 V ≤ V_{DD1} ≤ 5.5 V, 2.7 V ≤ V_{DD2} ≤ 3.6 V; 3 V/5 V operation: 2.7 V ≤ V_{DD1} ≤ 3.6 V, 4.5 V ≤ V_{DD2} ≤ 5.5 V; all minimum/maximum specifications apply over the entire recommended operation range, unless otherwise noted; all typical specifications are at T_A = 25°C; V_{DD1} = 3.0 V, V_{DD2} = 5 V or V_{DD1} = 5 V, V_{DD2} = 3.0 V. All voltages are relative to their respective ground.

Table 3.

Parameter	Symbol	Min	Typ	Max	Unit	Test Conditions
DC SPECIFICATIONS						
ADuM1310, Total Supply Current, Three Channels[1]						
DC to 2 Mbps						
V_{DD1} Supply Current	$I_{DD1 (Q)}$					
5 V/3 V Operation			2.4	3.2	mA	DC to 1 MHz logic signal frequency
3 V/5 V Operation			1.2	1.6	mA	DC to 1 MHz logic signal frequency
V_{DD2} Supply Current	$I_{DD2 (Q)}$					
5 V/3 V Operation			0.8	1.0	mA	DC to 1 MHz logic signal frequency
3 V/5 V Operation			1.2	1.6	mA	DC to 1 MHz logic signal frequency
10 Mbps (BRWZ Grade Only)						
V_{DD1} Supply Current	$I_{DD1 (10)}$					
5 V/3 V Operation			6.5	8.2	mA	5 MHz logic signal frequency
3 V/5 V Operation			3.4	4.9	mA	5 MHz logic signal frequency
V_{DD2} Supply Current	$I_{DD2 (10)}$					
5 V/3 V Operation			1.1	1.3	mA	5 MHz logic signal frequency
3 V/5 V Operation			1.9	2.2	mA	5 MHz logic signal frequency
ADuM1311, Total Supply Current, Three Channels[1]						
DC to 2 Mbps						
V_{DD1} Supply Current	$I_{DD1 (Q)}$					
5 V/3 V Operation			2.2	2.8	mA	DC to 1 MHz logic signal frequency
3 V/5 V Operation			1.0	1.6	mA	DC to 1 MHz logic signal frequency
V_{DD2} Supply Current	$I_{DD2 (Q)}$					
5 V/3 V Operation			0.9	1.4	mA	DC to 1 MHz logic signal frequency
3 V/5 V Operation			1.8	2.4	mA	DC to 1 MHz logic signal frequency
10 Mbps (BRWZ Grade Only)						
V_{DD1} Supply Current	$I_{DD1 (10)}$					
5 V/3 V Operation			4.5	5.7	mA	5 MHz logic signal frequency
3 V/5 V Operation			2.5	3.5	mA	5 MHz logic signal frequency
V_{DD2} Supply Current	$I_{DD2 (10)}$					
5 V/3 V Operation			1.9	2.6	mA	5 MHz logic signal frequency
3 V/5 V Operation			3.5	4.3	mA	5 MHz logic signal frequency
For All Models						
Input Currents	I_{IA}, I_{IB}, I_{IC}, I_{CTRL1}, I_{CTRL2}, $I_{DISABLE}$	−10	+0.01	+10	μA	0 V ≤ V_{IA}, V_{IB}, V_{IC} ≤ V_{DD1} or V_{DD2}, 0 V ≤ V_{CTRL1}, V_{CTRL2} ≤ V_{DD1} or V_{DD2}, 0 V ≤ $V_{DISABLE}$ ≤ V_{DD1}
Logic High Input Threshold	V_{IH}					
V_{DDX} = 5 V Operation		2.0			V	
V_{DDX} = 3 V Operation		1.6			V	

Parameter	Symbol	Min	Typ	Max	Unit	Test Conditions
Logic Low Input Threshold	V_{IL}					
V_{DDX} = 5 V Operation				0.8	V	
V_{DDX} = 3 V Operation				0.4	V	
Logic High Output Voltages	V_{OAH}, V_{OBH}, V_{OCH}	(V_{DD1} or V_{DD2}) − 0.1	(V_{DD1} or V_{DD2})		V	I_{Ox} = −20 μA, V_{Ix} = V_{IxH}
		(V_{DD1} or V_{DD2}) − 0.4	(V_{DD1} or V_{DD2}) − 0.2		V	I_{Ox} = −4 mA, V_{Ix} = V_{IxH}
Logic Low Output Voltages	V_{OAL}, V_{OBL}, V_{OCL}		0.0	0.1	V	I_{Ox} = 20 μA, V_{Ix} = V_{IxL}
			0.2	0.4	V	I_{Ox} = 4 mA, V_{Ix} = V_{IxL}
SWITCHING SPECIFICATIONS						
ADuM131xARWZ						
Minimum Pulse Width[2]	PW			1000	ns	C_L = 15 pF, CMOS signal levels
Maximum Data Rate[3]		1			Mbps	C_L = 15 pF, CMOS signal levels
Propagation Delay[4]	t_{PHL}, t_{PLH}	25		100	ns	C_L = 15 pF, CMOS signal levels
Pulse Width Distortion $\|t_{PLH} - t_{PHL}\|$[4]	PWD			40	ns	C_L = 15 pF, CMOS signal levels
Propagation Delay Skew[5]	t_{PSK}			50	ns	C_L = 15 pF, CMOS signal levels
Channel-to-Channel Matching[6]	$t_{PSKCD/OD}$			50	ns	C_L = 15 pF, CMOS signal levels
ADuM131xBRWZ						
Minimum Pulse Width[2]	PW			100	ns	C_L = 15 pF, CMOS signal levels
Maximum Data Rate[3]		10			Mbps	C_L = 15 pF, CMOS signal levels
Propagation Delay[4]	t_{PHL}, t_{PLH}	20		60	ns	C_L = 15 pF, CMOS signal levels
Pulse Width Distortion, $\|t_{PLH} - t_{PHL}\|$[4]	PWD			5	ns	C_L = 15 pF, CMOS signal levels
Change vs. Temperature			5		ps/°C	C_L = 15 pF, CMOS signal levels
Propagation Delay Skew[5]	t_{PSK}			30	ns	C_L = 15 pF, CMOS signal levels
Channel-to-Channel Matching, Codirectional Channels[6]	t_{PSKCD}			5	ns	C_L = 15 pF, CMOS signal levels
Channel-to-Channel Matching, Opposing-Directional Channels[6]	t_{PSKOD}			6	ns	C_L = 15 pF, CMOS signal levels
For All Models						
Output Rise/Fall Time (10% to 90%)	t_R/t_F					C_L = 15 pF, CMOS signal levels
5 V/3 V Operation			2.5		ns	
3 V/5 V Operation			2.5		ns	
Common-Mode Transient Immunity at Logic High Output[7]	$\|CM_H\|$	25	35		kV/μs	V_{Ix} = V_{DD1} or V_{DD2}, V_{CM} = 1000 V, transient magnitude = 800 V
Common-Mode Transient Immunity at Logic Low Output[7]	$\|CM_L\|$	25	35		kV/μs	V_{Ix} = 0 V, V_{CM} = 1000 V, transient magnitude = 800 V
Refresh Rate	f_r					
5 V/3 V Operation			1.2		Mbps	
3 V/5 V Operation			1.1		Mbps	
Input Enable Time[8]	t_{ENABLE}			2.0	μs	V_{IA}, V_{IB}, V_{IC}, V_{ID} = 0 V or V_{DD1}
Input Disable Time[8]	$t_{DISABLE}$			5.0	μs	V_{IA}, V_{IB}, V_{IC}, V_{ID} = 0 V or V_{DD1}
Input Supply Current per Channel, Quiescent[9]						
V_{DDX} = 5 V Operation	$I_{DDI (Q)}$		0.50	0.73	mA	
V_{DDX} = 3 V Operation	$I_{DDI (Q)}$		0.25	0.38	mA	
Output Supply Current per Channel, Quiescent[9]						
V_{DDX} = 5 V Operation	$I_{DDO (Q)}$		0.38	0.53	mA	
V_{DDX} = 3 V Operation	$I_{DDO (Q)}$		0.19	0.33	mA	
Input Dynamic Supply Current per Channel[10]	$I_{DDI (D)}$					
V_{DDX} = 5 V Operation			0.12		mA/ Mbps	
V_{DDX} = 3 V Operation			0.07		mA/ Mbps	

Parameter	Symbol	Min	Typ	Max	Unit	Test Conditions
Output Dynamic Supply Current per Channel[10]	$I_{DDI (D)}$					
V_{DDX} = 5 V Operation			0.04		mA/ Mbps	
V_{DDX} = 3 V Operation			0.02		mA/ Mbps	

[1] The supply current values for all four channels are combined when running at identical data rates. Output supply current values are specified with no output load present. The supply current associated with an individual channel operating at a given data rate can be calculated as described in the Power Consumption section. See Figure 6 through Figure 8 for information on per-channel supply current as a function of data rate for unloaded and loaded conditions. See Figure 9 through Figure 12 for total V_{DD1} and V_{DD2} supply currents as a function of data rate for ADuM1310/ADuM1311 channel configurations.
[2] The minimum pulse width is the shortest pulse width at which the specified pulse width distortion is guaranteed.
[3] The maximum data rate is the fastest data rate at which the specified pulse width distortion is guaranteed.
[4] t_{PHL} propagation delay is measured from the 50% level of the falling edge of the V_{Ix} signal to the 50% level of the falling edge of the V_{Ox} signal. t_{PLH} propagation delay is measured from the 50% level of the rising edge of the V_{Ix} signal to the 50% level of the rising edge of the V_{Ox} signal.
[5] t_{PSK} is the magnitude of the worst-case difference in t_{PHL} or t_{PLH} that is measured between units at the same operating temperature, supply voltages, and output load within the recommended operating conditions.
[6] Codirectional channel-to-channel matching is the absolute value of the difference in propagation delays between any two channels with inputs on the same side of the isolation barrier. Opposing-directional channel-to-channel matching is the absolute value of the difference in propagation delays between any two channels with inputs on opposing sides of the isolation barrier.
[7] CM_H is the maximum common-mode voltage slew rate that can be sustained while maintaining $V_O > 0.8\ V_{DD2}$. CM_L is the maximum common-mode voltage slew rate that can be sustained while maintaining $V_O < 0.8$ V. The common-mode voltage slew rates apply to both rising and falling common-mode voltage edges. The transient magnitude is the range over which the common mode is slewed.
[8] Input enable time is the duration from when $V_{DISABLE}$ is set low until the output states are guaranteed to match the input states in the absence of any input data logic transitions. If an input data logic transition within a given channel does occur within this time interval, the output of that channel reaches the correct state within the much shorter duration, as determined by the propagation delay specifications within this data sheet. Input disable time is the duration from when $V_{DISABLE}$ is set high until the output states are guaranteed to reach their programmed output levels, as determined by the $CTRL_2$ logic state (see Table 13).
[9] $I_{DDx (Q)}$ is the quiescent current drawn from the corresponding supply by a single channel. To calculate the total quiescent current, an additional inaccessible channel in the same orientation as Channel A must be included to account for the total current consumed.
[10] Dynamic supply current is the incremental amount of supply current required for a 1 Mbps increase in signal data rate. See Figure 6 through Figure 8 for information on per-channel supply current for unloaded and loaded conditions. See the Power Consumption section for guidance on calculating the per-channel supply current for a given data rate.

PACKAGE CHARACTERISTICS

Table 4.

Parameter	Symbol	Min	Typ	Max	Unit	Test Conditions
Resistance (Input-to-Output)[1]	R_{I-O}		10^{12}		Ω	
Capacitance (Input-to-Output)[1]	C_{I-O}		2.2		pF	f = 1 MHz
Input Capacitance[2]	C_I		4.0		pF	
IC Junction-to-Case Thermal Resistance						
Side 1	θ_{JCI}		33		°C/W	Thermocouple located at center of package underside
Side 2	θ_{JCO}		28		°C/W	

[1] The device is considered a 2-terminal device; Pin 1 through Pin 8 are shorted together, and Pin 9 through Pin 16 are shorted together.
[2] Input capacitance is from any input data pin to ground.

REGULATORY INFORMATION

The ADuM1310/ADuM1311 have been approved by the organizations listed in Table 5. See Table 10 and the Insulation Lifetime section for recommended maximum working voltages for specific cross-isolation waveforms and insulation levels.

Table 5.

UL	CSA	VDE
Recognized Under 1577 Component Recognition Program[1]	Approved under CSA Component Acceptance Notice #5A	Certified according to DIN V VDE V 0884-10 (VDE V 0884-10): 2006-12[2]
Single Protection, 3750 V rms Isolation Voltage	Basic insulation per CSA 60950-1-03 and IEC 60950-1, 800 V rms (1131 V peak) maximum working voltage Reinforced insulation per CSA 60950-1-03 and IEC 60950-1, 400 V rms (566 V peak) maximum working voltage	Reinforced insulation, 560 V peak
File E214100	File 205078	File 2471900-4880-0001

[1] In accordance with UL 1577, each ADuM1310/ADuM1311 is proof-tested by applying an insulation test voltage ≥4500 V rms for 1 sec (current leakage detection limit = 8.1 μA).
[2] In accordance with DIN V VDE V 0884-10, each ADuM1310/ADuM1311 is proof-tested by applying an insulation test voltage ≥1050 V peak for 1 second (partial discharge detection limit = 5 pC). The asterisk (*) marked on the component designates DIN V VDE V 0884-10 approval.

INSULATION AND SAFETY-RELATED SPECIFICATIONS

Table 6.

Parameter	Symbol	Value	Unit	Conditions
Rated Dielectric Insulation Voltage		3750	V rms	1-minute duration
Minimum External Air Gap (Clearance)	L(I01)	7.7 min	mm	Measured from input terminals to output terminals, shortest distance through air
Minimum External Tracking (Creepage)	L(I02)	8.1 min	mm	Measured from input terminals to output terminals, shortest distance path along body
Minimum Internal Gap (Internal Clearance)		0.017 min	mm	Insulation distance through insulation
Tracking Resistance (Comparative Tracking Index)	CTI	>175	V	DIN IEC 112/VDE 0303 Part 1
Isolation Group		IIIa		Material Group (DIN VDE 0110, 1/89, Table 1)

DIN V VDE V 0884-10 (VDE V 0884-10): 2006-12 INSULATION CHARACTERISTICS

The ADuM1310/ADuM1311 isolators are suitable for reinforced electrical isolation within the safety limit data only. Maintenance of the safety data is ensured by protective circuits. The asterisk (*) marked on packages denotes DIN V VDE V 0884-10 approval for 560 V peak working voltage.

Table 7.

Description	Conditions	Symbol	Characteristic	Unit
Installation Classification per DIN VDE 0110				
For Rated Mains Voltage ≤ 150 V rms			I to IV	
For Rated Mains Voltage ≤ 300 V rms			I to III	
For Rated Mains Voltage ≤ 400 V rms			I to II	
Climatic Classification			40/105/21	
Pollution Degree per DIN VDE 0110, Table 1			2	
Maximum Working Insulation Voltage		V_{IORM}	560	V peak
Input-to-Output Test Voltage, Method B1	$V_{IORM} \times 1.875 = V_{PR}$, 100% production test, t_m = 1 sec, partial discharge < 5 pC	V_{PR}	1050	V peak
Input-to-Output Test Voltage, Method A	$V_{IORM} \times 1.6 = V_{PR}$, t_m = 60 sec, partial discharge < 5 pC	V_{PR}		
After Environmental Tests Subgroup 1			896	V peak
After Input and/or Safety Test Subgroup 2 and Subgroup 3	$V_{IORM} \times 1.2 = V_{PR}$, t_m = 60 sec, partial discharge < 5 pC		672	V peak
Highest Allowable Overvoltage	Transient overvoltage, t_{TR} = 10 sec	V_{TR}	4000	V peak
Safety-Limiting Values	Maximum value allowed in the event of a failure; see Figure 3			
Case Temperature		T_S	150	°C
Side 1 Current		I_{S1}	265	mA
Side 2 Current		I_{S2}	335	mA
Insulation Resistance at T_S	V_{IO} = 500 V	R_S	$>10^9$	Ω

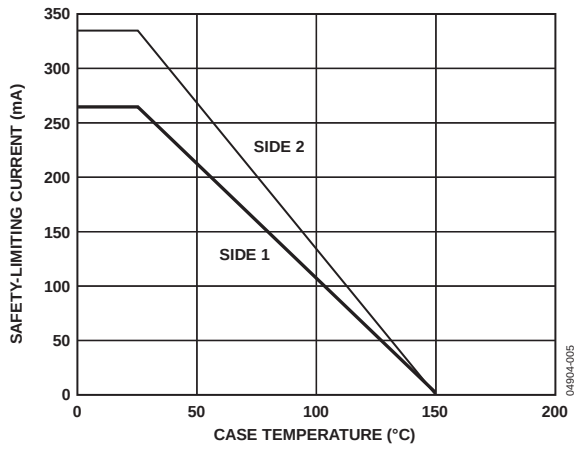

Figure 3. Thermal Derating Curve, Dependence of Safety-Limiting Values with Case Temperature per DIN V VDE V 0884-10

RECOMMENDED OPERATING CONDITIONS

Table 8.

Parameter	Symbol	Min	Max	Unit
Operating Temperature	T_A	−40	+105	°C
Supply Voltages[1]	V_{DD1}, V_{DD2}	2.7	5.5	V
Input Signal Rise and Fall Times			1.0	ms

[1] All voltages are relative to their respective ground. See the DC Correctness and Magnetic Field Immunity section for information on immunity to external magnetic fields.

ABSOLUTE MAXIMUM RATINGS

T_A = 25°C, unless otherwise noted.

Table 9.

Parameter	Rating
Storage Temperature (T_{ST}) Range	−65°C to +150°C
Ambient Operating Temperature (T_A) Range	−40°C to +105°C
Supply Voltages (V_{DD1}, V_{DD2})[1]	−0.5 V to +7.0 V
Input Voltage (V_{IA}, V_{IB}, V_{IC}, $V_{DISABLE}$, V_{CTRL1}, V_{CTRL2})[1, 2]	−0.5 V to V_{DDI} + 0.5 V
Output Voltage (V_{OA}, V_{OB}, V_{OC})[1, 2]	−0.5 V to V_{DDO} + 0.5 V
Average Output Current per Pin[3]	
Side 1 (I_{O1})	−18 mA to +18 mA
Side 2 (I_{O2})	−22 mA to +22 mA
Common-Mode Transients [4]	−100 kV/µs to +100 kV/µs

[1] All voltages are relative to their respective ground.
[2] V_{DDI} and V_{DDO} refer to the supply voltages on the input and output sides of a given channel, respectively. See the PC Board Layout section.
[3] See Figure 3 for maximum rated current values for various temperatures.
[4] Refers to common-mode transients across the insulation barrier. Common-mode transients exceeding the absolute maximum ratings may cause latch-up or permanent damage.

Stresses above those listed under Absolute Maximum Ratings may cause permanent damage to the device. This is a stress rating only; functional operation of the device at these or any other conditions above those indicated in the operational section of this specification is not implied. Exposure to absolute maximum rating conditions for extended periods may affect device reliability.

ESD CAUTION



ESD (electrostatic discharge) sensitive device. Charged devices and circuit boards can discharge without detection. Although this product features patented or proprietary protection circuitry, damage may occur on devices subjected to high energy ESD. Therefore, proper ESD precautions should be taken to avoid performance degradation or loss of functionality.

Table 10. Maximum Continuous Working Voltage[1]

Parameter	Max	Unit	Constraint
AC Voltage, Bipolar Waveform	565	V peak	50-year minimum lifetime
AC Voltage, Unipolar Waveform			
Basic Insulation	1131	V peak	Maximum approved working voltage per IEC 60950-1
Reinforced Insulation	560	V peak	Maximum approved working voltage per IEC 60950-1 and VDE V 0884-10
DC Voltage			
Basic Insulation	1131	V peak	Maximum approved working voltage per IEC 60950-1
Reinforced Insulation	560	V peak	Maximum approved working voltage per IEC 60950-1 and VDE V 0884-10

[1] Refers to continuous voltage magnitude imposed across the isolation barrier. See the Insulation Lifetime section for more details.

PIN CONFIGURATIONS AND FUNCTION DESCRIPTIONS

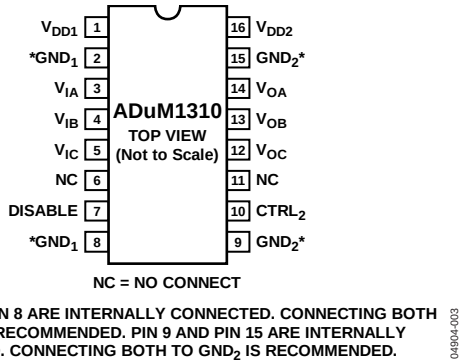

Figure 4. ADuM1310 Pin Configuration

Table 11. ADuM1310 Pin Function Descriptions

Pin No.	Mnemonic	Description
1	V_{DD1}	Supply Voltage for Isolator Side 1, 2.7 V to 5.5 V.
2	GND_1	Ground 1. Ground reference for Isolator Side 1.
3	V_{IA}	Logic Input A.
4	V_{IB}	Logic Input B.
5	V_{IC}	Logic Input C.
6	NC	No Connection.
7	DISABLE	Input Disable. Disables the isolator inputs and halts the dc refresh circuits. Outputs take on the logic state determined by $CTRL_2$.
8	GND_1	Ground 1. Ground reference for Isolator Side 1.
9	GND_2	Ground 2. Ground reference for Isolator Side 2.
10	$CTRL_2$	Default Output Control. Controls the logic state the outputs take on when the input power is off. V_{OA}, V_{OB}, and V_{OC} outputs are high when $CTRL_2$ is high or disconnected and V_{DD1} is off. V_{OA}, V_{OB}, and V_{OC} outputs are low when $CTRL_2$ is low and V_{DD1} is off. When V_{DD1} power is on, this pin has no effect.
11	NC	No Connection.
12	V_{OC}	Logic Output C.
13	V_{OB}	Logic Output B.
14	V_{OA}	Logic Output A.
15	GND_2	Ground 2. Ground reference for Isolator Side 2.
16	V_{DD2}	Supply Voltage for Isolator Side 2, 2.7 V to 5.5 V.

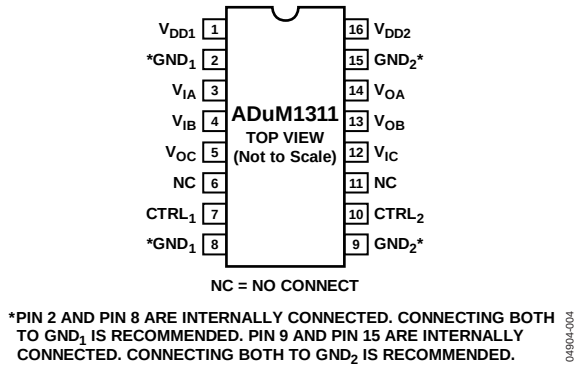

Figure 5. ADuM1311 Pin Configuration

Table 12. ADuM1311 Pin Function Descriptions

Pin No.	Mnemonic	Description
1	V_{DD1}	Supply Voltage for Isolator Side 1, 2.7 V to 5.5 V.
2	GND_1	Ground 1. Ground reference for Isolator Side 1.
3	V_{IA}	Logic Input A.
4	V_{IB}	Logic Input B.
5	V_{OC}	Logic Output C.
6	NC	No Connection.
7	$CTRL_1$	Default Output Control. Controls the logic state the outputs take on when the input power is off. V_{OC} output is high when $CTRL_1$ is high or disconnected and V_{DD2} is off. V_{OC} output is low when $CTRL_1$ is low and V_{DD2} is off. When V_{DD2} power is on, this pin has no effect.
8	GND_1	Ground 1. Ground reference for Isolator Side 1.
9	GND_2	Ground 2. Ground reference for Isolator Side 2.
10	$CTRL_2$	Default Output Control. Controls the logic state the outputs take on when the input power is off. V_{OA} and V_{OB} outputs are high when $CTRL_2$ is high or disconnected and V_{DD1} is off. V_{OA} and V_{OB} outputs are low when $CTRL_2$ is low and V_{DD1} is off. When V_{DD1} power is on, this pin has no effect.
11	NC	No Connection.
12	V_{IC}	Logic Input C.
13	V_{OB}	Logic Output B.
14	V_{OA}	Logic Output A.
15	GND_2	Ground 2. Ground reference for Isolator Side 2.
16	V_{DD2}	Supply Voltage for Isolator Side 2, 2.7 V to 5.5 V.

Table 13. Truth Table (Positive Logic)

V_{Ix} Input[1]	$CTRL_x$ Input[2]	$V_{DISABLE}$ State[3]	V_{DDI} State[4]	V_{DDO} State[5]	V_{Ox} Output	Description
H	X	L or NC	Powered	Powered	H	Normal operation, data is high.
L	X	L or NC	Powered	Powered	L	Normal operation, data is low.
X	H or NC	H	X	Powered	H	Inputs disabled. Outputs are in the default state determined by $CTRL_x$.
X	L	H	X	Powered	L	Inputs disabled. Outputs are in the default state determined by $CTRL_x$.
X	H or NC	X	Unpowered	Powered	H	Input unpowered. Outputs are in the default state determined by $CTRL_x$. Outputs return to input state within 1 µs of V_{DDI} power restoration. See the pin function descriptions (Table 11 and Table 12) for more details.
X	L	X	Unpowered	Powered	L	Input unpowered. Outputs are in the default state determined by $CTRL_x$. Outputs return to input state within 1 µs of V_{DDI} power restoration. See the pin function descriptions (Table 11 and Table 12) for more details.
X	X	X	Powered	Unpowered	Z	Output unpowered. Output pins are in high impedance state. Outputs return to input state within 1 µs of V_{DDO} power restoration. See the pin function descriptions (Table 11 and Table 12) for more details.

[1] V_{Ix} and V_{Ox} refer to the input and output signals of a given channel (A, B, or C).
[2] $CTRL_x$ refers to the default output control signal on the input side of a given channel (A, B, or C).
[3] Available only on the ADuM1310.
[4] V_{DDI} refers to the power supply on the input side of a given channel (A, B, or C).
[5] V_{DDO} refers to the power supply on the output side of a given channel (A, B, or C).

TYPICAL PERFORMANCE CHARACTERISTICS

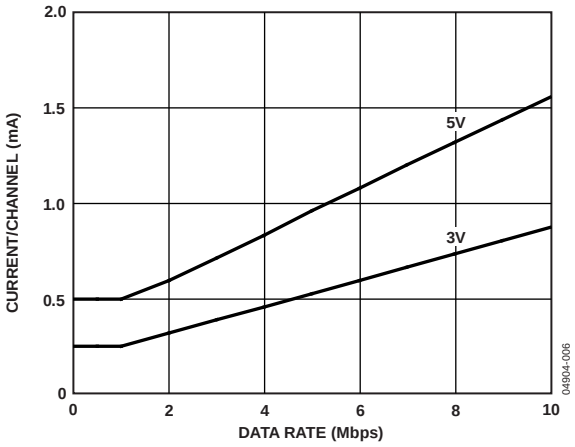

Figure 6. Typical Supply Current per Input Channel vs. Data Rate for 5 V and 3 V Operation

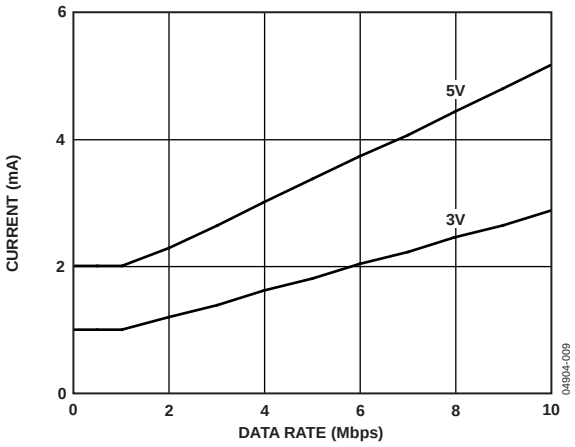

Figure 9. Typical ADuM1310 V_{DD1} Supply Current vs. Data Rate for 5 V and 3 V Operation

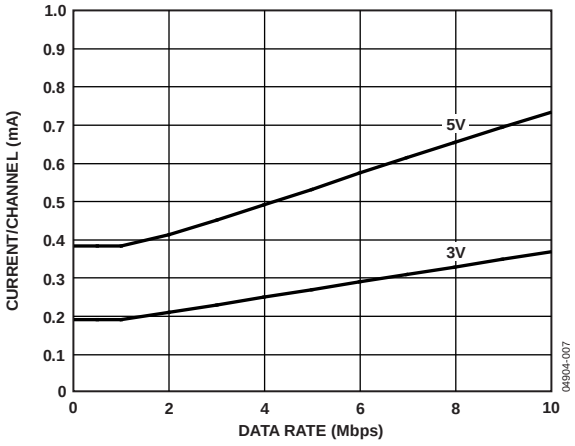

Figure 7. Typical Supply Current per Output Channel vs. Data Rate for 5 V and 3 V Operation (No Output Load)

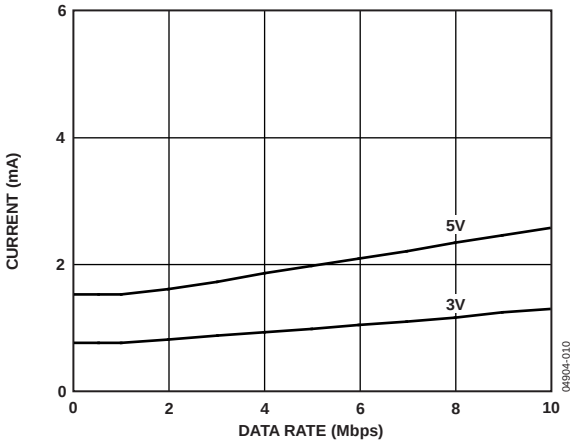

Figure 10. Typical ADuM1310 V_{DD2} Supply Current vs. Data Rate for 5 V and 3 V Operation (No Output Load)

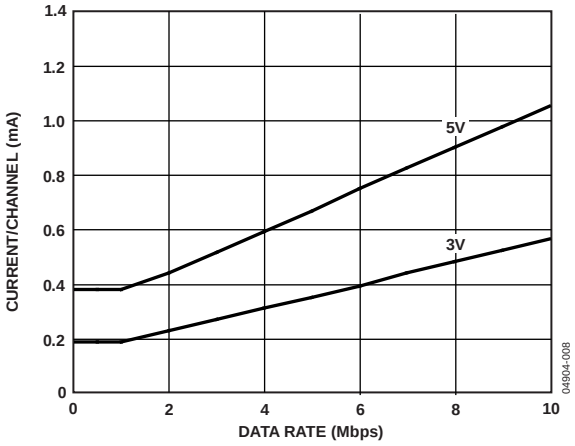

Figure 8. Typical Supply Current per Output Channel vs. Data Rate for 5 V and 3 V Operation (15 pF Output Load)

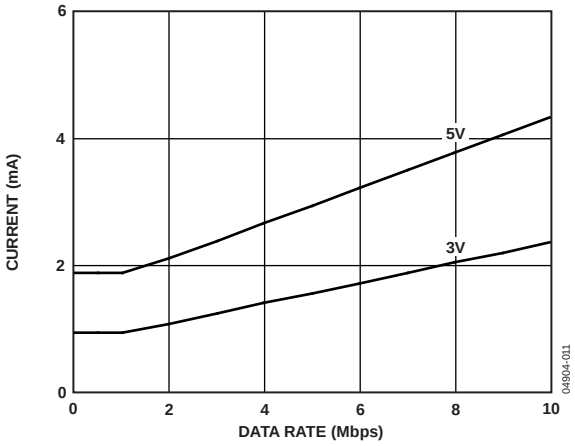

Figure 11. Typical ADuM1311 V_{DD1} Supply Current vs. Data Rate for 5 V and 3 V Operation (No Output Load)

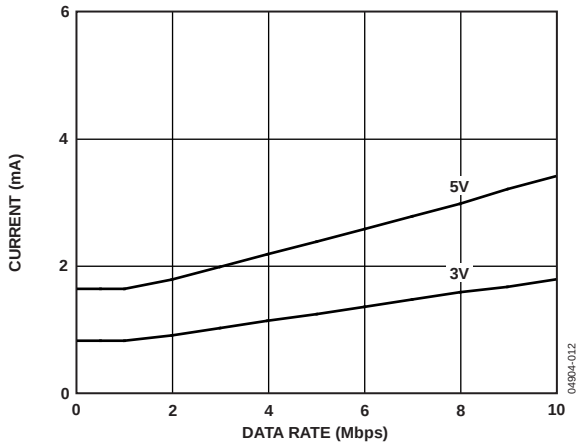

Figure 12. Typical ADuM1311 V_{DD2} Supply Current vs. Data Rate for 5 V and 3 V Operation (No Output Load)

APPLICATIONS INFORMATION

PC BOARD LAYOUT

The ADuM1310/ADuM1311 digital isolator requires no external interface circuitry for the logic interfaces. Power supply bypassing is strongly recommended at the input and output supply pins (see Figure 13). Bypass capacitors are most conveniently connected between Pin 1 and Pin 2 for V_{DD1} and between Pin 15 and Pin 16 for V_{DD2}. The capacitor value should be between 0.01 µF and 0.1 µF. The total lead length between both ends of the capacitor and the input power supply pin should not exceed 20 mm. Bypassing between Pin 1 and Pin 8 and between Pin 9 and Pin 16 should be considered, unless both ground pins on each package are connected together close to the package.

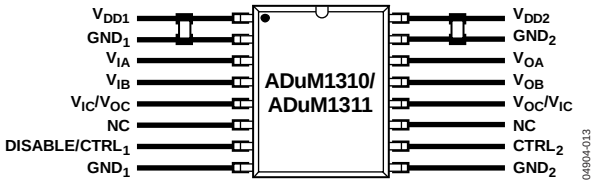

Figure 13. Recommended Printed Circuit Board Layout

In applications involving high common-mode transients, care should be taken to ensure that board coupling across the isolation barrier is minimized. Furthermore, the board layout should be designed so that any coupling that does occur equally affects all pins on a given component side. Failure to ensure this can cause voltage differentials between pins exceeding the device's absolute maximum ratings, thereby leading to latch-up or permanent damage.

See the AN-1109 Application Note for board layout guidelines.

PROPAGATION DELAY-RELATED PARAMETERS

Propagation delay is a parameter that describes the time it takes a logic signal to propagate through a component. The input-to-output propagation delay time for a high-to-low transition may differ from the propagation delay time of a low-to-high transition.

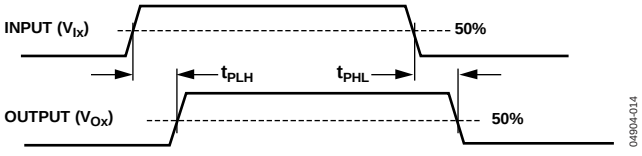

Figure 14. Propagation Delay Parameters

Pulse width distortion is the maximum difference between these two propagation delay values and is an indication of how accurately the input signal's timing is preserved.

Channel-to-channel matching refers to the maximum amount the propagation delay differs between channels within a single ADuM1310/ADuM1311 component.

Propagation delay skew refers to the maximum amount the propagation delay differs between multiple ADuM1310/ADuM1311 components operating under the same conditions.

DC CORRECTNESS AND MAGNETIC FIELD IMMUNITY

Positive and negative logic transitions at the isolator input cause narrow (~1 ns) pulses to be sent to the decoder via the transformer. The decoder is bistable and is therefore either set or reset by the pulses, indicating input logic transitions. In the absence of logic transitions at the input for more than ~1 µs, a periodic set of refresh pulses indicative of the correct input state is sent to ensure dc correctness at the output. If the decoder receives no internal pulses of more than about 5 µs, the input side is assumed to be unpowered or nonfunctional, in which case the isolator output is forced to a default state (see Table 13) by the watchdog timer circuit.

The magnetic field immunity of the ADuM1310/ADuM1311 is determined by the changing magnetic field, which induces a voltage in the transformer's receiving coil large enough to either falsely set or reset the decoder. The following analysis defines the conditions under which this can occur. The 3 V operating condition of the ADuM1310/ADuM1311 is examined because it represents the most susceptible mode of operation.

The pulses at the transformer output have an amplitude greater than 1.0 V. The decoder has a sensing threshold at about 0.5 V, thus establishing a 0.5 V margin in which induced voltages can be tolerated. The voltage induced across the receiving coil is given by

$$V = (-d\beta/dt) \sum \pi r_n^2; n = 1, 2, \ldots, N$$

where:
β is magnetic flux density (gauss).
r_n is the radius of the nth turn in the receiving coil (cm).
N is the number of turns in the receiving coil.

Given the geometry of the receiving coil in the ADuM1310/ADuM1311 and an imposed requirement that the induced voltage be, at most, 50% of the 0.5 V margin at the decoder, a maximum allowable magnetic field at a given frequency can be calculated. The result is shown in Figure 15.

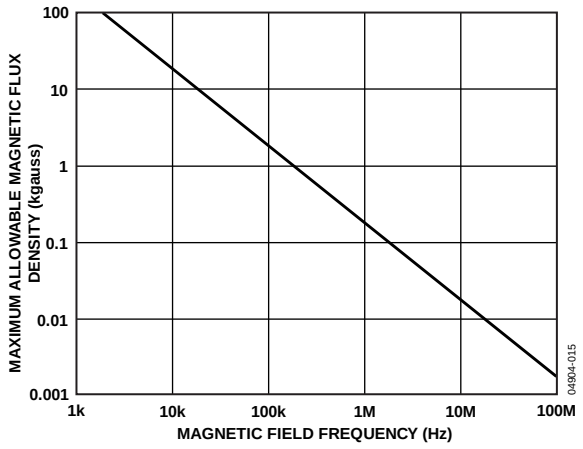

Figure 15. Maximum Allowable External Magnetic Flux Density

For example, at a magnetic field frequency of 1 MHz, the maximum allowable magnetic field of 0.2 kgauss induces a voltage of 0.25 V at the receiving coil. This is about 50% of the sensing threshold and does not cause a faulty output transition. Similarly, if such an event occurred during a transmitted pulse (and had the worst-case polarity), it would reduce the received pulse from >1.0 V to 0.75 V, still well above the 0.5 V sensing threshold of the decoder.

The preceding magnetic flux density values correspond to specific current magnitudes at given distances from the ADuM131x transformers. Figure 16 expresses these allowable current magnitudes as a function of frequency for selected distances. As shown, the ADuM1310/ADuM1311 is extremely immune and can be affected only by extremely large currents operated at high frequency very close to the component. For the 1 MHz example noted, a 0.5 kA current would have to be placed 5 mm away from the ADuM1310/ADuM1311 to affect the component's operation.

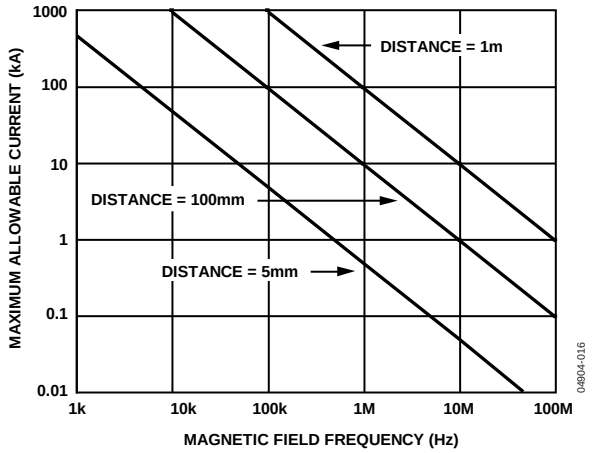

Figure 16. Maximum Allowable Current for Various Current-to-ADuM1310/ADuM1311 Spacings

Note that, at combinations of strong magnetic field and high frequency, any loops formed by printed circuit board traces can induce error voltages sufficient to trigger succeeding circuitry. Care should be taken in the layout of such traces to avoid this possibility.

POWER CONSUMPTION

The supply current at a given channel of the ADuM1310/ADuM1311 isolator is a function of the supply voltage, the channel data rate, and the channel output load.

For each input channel, the supply current is given by

$$I_{DDI} = I_{DDI\,(Q)} \qquad f \leq 0.5\,f_r$$

$$I_{DDI} = I_{DDI\,(D)} \times (2f - f_r) + I_{DDI\,(Q)} \qquad f > 0.5\,f_r$$

For each output channel, the supply current is given by

$$I_{DDO} = I_{DDO\,(Q)} \qquad f \leq 0.5\,f_r$$

$$I_{DDO} = (I_{DDO\,(D)} + (0.5 \times 10^{-3}) \times C_L \times V_{DDO}) \times (2f - f_r) + I_{DDO\,(Q)} \qquad f > 0.5\,f_r$$

where:
$I_{DDI\,(D)}$, $I_{DDO\,(D)}$ are the input and output dynamic supply currents per channel (mA/Mbps).
C_L is the output load capacitance (pF).
V_{DDO} is the output supply voltage (V).
f is the input logic signal frequency (MHz); it is half the input data rate, expressed in units of Mbps.
f_r is the input stage refresh rate (Mbps).
$I_{DDI\,(Q)}$, $I_{DDO\,(Q)}$ are the specified input and output quiescent supply currents (mA).

To calculate the total V_{DD1} and V_{DD2} supply current, the supply currents for each input and output channel corresponding to V_{DD1} and V_{DD2} are calculated and totaled. The ADuM1310/ADuM1311 contains an internal data channel that is not available to the user. This channel is in the same orientation as Channel A and consumes quiescent current. The contribution of this channel must be included in the total quiescent current calculation for each supply. Figure 6 and Figure 7 show per-channel supply currents as a function of data rate for an unloaded output condition. Figure 8 shows per-channel supply current as a function of data rate for a 15 pF output condition. Figure 9 through Figure 12 show total V_{DD1} and V_{DD2} supply current as a function of data rate for ADuM1310/ADuM1311 channel configurations.

INSULATION LIFETIME

All insulation structures eventually break down when subjected to voltage stress over a sufficiently long period. The rate of insulation degradation is dependent on the characteristics of the voltage waveform applied across the insulation. In addition to the testing performed by the regulatory agencies, Analog Devices carries out an extensive set of evaluations to determine the lifetime of the insulation structure within the ADuM1310/ ADuM1311.

Analog Devices performs accelerated life testing using voltage levels higher than the rated continuous working voltage. Acceleration factors for several operating conditions are determined. These factors allow calculation of the time to failure at the actual working voltage. The values shown in Table 10 summarize the peak voltage for 50 years of service life for a bipolar ac operating condition and the maximum CSA/VDE approved working voltages. In many cases, the approved working voltage is higher than 50-year service life voltage. Operation at these high working voltages can lead to shortened insulation life in some cases.

The insulation lifetime of the ADuM1310/ADuM1311 depends on the voltage waveform type imposed across the isolation barrier. The *i*Coupler insulation structure degrades at different rates depending on whether the waveform is bipolar ac, unipolar ac, or dc. Figure 17, Figure 18, and Figure 19 illustrate these different isolation voltage waveforms.

Bipolar ac voltage is the most stringent environment. The goal of a 50-year operating lifetime under the ac bipolar condition determines the Analog Devices recommended maximum working voltage.

In the case of unipolar ac or dc voltage, the stress on the insulation is significantly lower. This allows operation at higher working voltages while still achieving a 50-year service life. The working voltages listed in Table 10 can be applied while maintaining the 50-year minimum lifetime provided the voltage conforms to either the unipolar ac or dc voltage case. Any cross-insulation voltage waveform that does not conform to Figure 18 or Figure 19 should be treated as a bipolar ac waveform, and its peak voltage should be limited to the 50-year lifetime voltage value listed in Table 10.

Note that the voltage presented in Figure 18 is shown as sinusoidal for illustration purposes only. It is meant to represent any voltage waveform varying between 0 V and some limiting value. The limiting value can be positive or negative, but the voltage cannot cross 0 V.

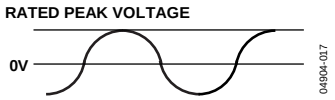

Figure 17. Bipolar AC Waveform

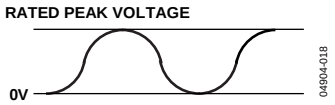

Figure 18. Unipolar AC Waveform

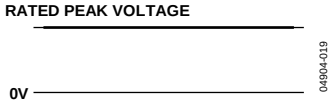

Figure 19. DC Waveform

OUTLINE DIMENSIONS

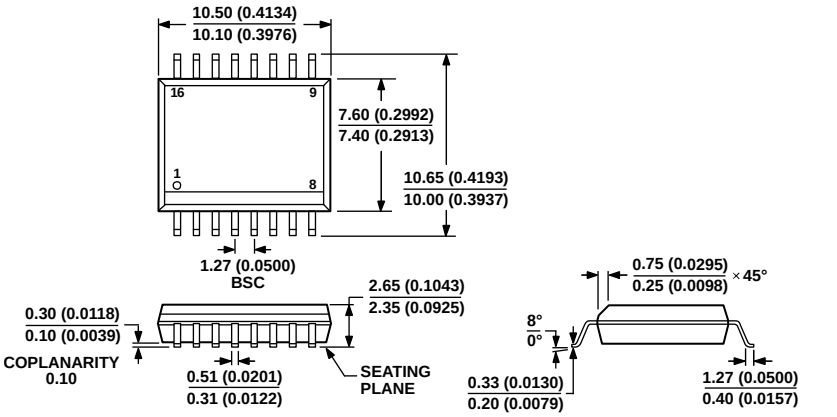

Figure 20. 16-Lead Standard Small Outline Package [SOIC_W]
Wide Body (RW-16)
Dimensions shown in millimeters and (inches)

ORDERING GUIDE

Model[1]	Number of Inputs, V_{DD1} Side	Number of Inputs, V_{DD2} Side	Maximum Data Rate (Mbps)	Maximum Propagation Delay, 5 V (ns)	Maximum Pulse Width Distortion (ns)	Temperature Range	Package Description	Package Option
ADuM1310ARWZ	3	0	1	100	40	−40°C to +105°C	16-Lead SOIC_W	RW-16
ADuM1310ARWZ-RL	3	0	1	100	40	−40°C to +105°C	16-Lead SOIC_W, 13″ Tape and Reel	RW-16
ADuM1310BRWZ	3	0	10	50	5	−40°C to +105°C	16-Lead SOIC_W	RW-16
ADuM1310BRWZ-RL	3	0	10	50	5	−40°C to +105°C	16-Lead SOIC_W, 13″ Tape and Reel	RW-16
ADuM1311ARWZ	2	1	1	100	40	−40°C to +105°C	16-Lead SOIC_W	RW-16
ADuM1311ARWZ-RL	2	1	1	100	40	−40°C to +105°C	16-Lead SOIC_W, 13″ Tape and Reel	RW-16
ADuM1311BRWZ	2	1	10	50	5	−40°C to +105°C	16-Lead SOIC_W	RW-16
ADuM1311BRWZ-RL	2	1	10	50	5	−40°C to +105°C	16-Lead SOIC_W, 13″ Tape and Reel	RW-16

[1] Z = RoHS Compliant Part.

NOTES

NOTES

NOTES

©2005–2014 Analog Devices, Inc. All rights reserved. Trademarks and registered trademarks are the property of their respective owners.
D04904-0-9/14(J)