DSP Microcomputer

ADSP-2186L

FEATURES

Performance

25 ns Instruction Cycle Time 40 MIPS Sustained Performance
Single-Cycle Instruction Execution
Single-Cycle Context Switch
3-Bus Architecture Allows Dual Operand Fetches in Every Instruction Cycle
Multifunction Instructions
Power-Down Mode Featuring Low CMOS Standby Power Dissipation with 400 Cycle Recovery from Power-Down Condition
Low Power Dissipation in Idle Mode

Integration

ADSP-2100 Family Code Compatible, with Instruction Set Extensions
40K Bytes of On-Chip RAM, Configured as 8K Words On-Chip Program Memory RAM and 8K Words On-Chip Data Memory RAM
Dual Purpose Program Memory for Both Instruction and Data Storage
Independent ALU, Multiplier/Accumulator and Barrel Shifter Computational Units
Two Independent Data Address Generators
Powerful Program Sequencer Provides Zero Overhead Looping Conditional Instruction Execution
Programmable 16-Bit Interval Timer with Prescaler
100-Lead LQFP and 144-Ball Mini-BGA

System Interface

16-Bit Internal DMA Port for High Speed Access to On-Chip Memory (Mode Selectable)
4 MByte Byte Memory Interface for Storage of Data Tables and Program Overlays
8-Bit DMA to Byte Memory for Transparent Program and Data Memory Transfers (Mode Selectable)
I/O Memory Interface with 2048 Locations Supports Parallel Peripherals (Mode Selectable)
Programmable Memory Strobe and Separate I/O Memory Space Permits "Glueless" System Design (Mode Selectable)
Programmable Wait State Generation
Two Double-Buffered Serial Ports with Companding Hardware and Automatic Data Buffering
Automatic Booting of On-Chip Program Memory from Byte-Wide External Memory, e.g., EPROM, or Through Internal DMA Port
Six External Interrupts

FUNCTIONAL BLOCK DIAGRAM

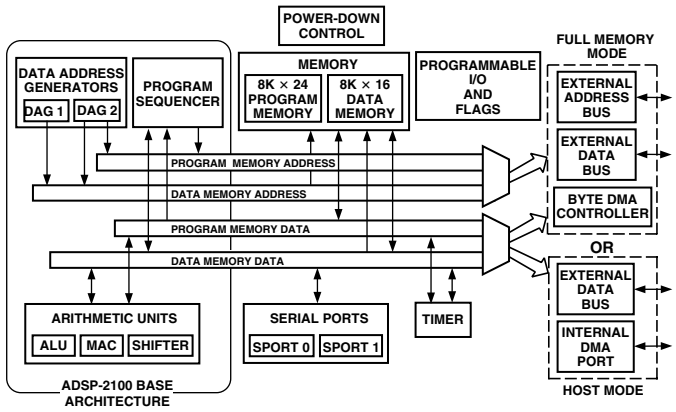

13 Programmable Flag Pins Provide Flexible System Signaling
UART Emulation through Software SPORT Reconfiguration
ICE-Port™ Emulator Interface Supports Debugging in Final Systems

GENERAL DESCRIPTION

The ADSP-2186L is a single-chip microcomputer optimized for digital signal processing (DSP) and other high speed numeric processing applications.

The ADSP-2186L combines the ADSP-2100 family base architecture (three computational units, data address generators and a program sequencer) with two serial ports, a 16-bit internal DMA port, a byte DMA port, a programmable timer, Flag I/O, extensive interrupt capabilities and on-chip program and data memory.

The ADSP-2186L integrates 40K bytes of on-chip memory configured as 8K words (24-bit) of program RAM and 8K words (16-bit) of data RAM. Power-down circuitry is also provided to meet the low power needs of battery operated portable equipment. The ADSP-2186L is available in a 100-lead LQFP and 144-ball mini-BGA packages.

In addition, the ADSP-2186L supports new instructions, which include bit manipulations—bit set, bit clear, bit toggle, bit test—new ALU constants, new multiplication instruction (x squared), biased rounding, result free ALU operations, I/O memory transfers and global interrupt masking for increased flexibility.

Fabricated in a high speed, double metal, low power, CMOS process, the ADSP-2186L operates with a 25 ns instruction cycle time. Every instruction can execute in a single processor cycle.

The ADSP-21xx family DSPs contain a shadow bank register that is useful for single cycle context switching of the processor.

ICE-Port is a trademark of Analog Devices, Inc.
All other trademarks are the property of their respective holders.

REV. B

Information furnished by Analog Devices is believed to be accurate and reliable. However, no responsibility is assumed by Analog Devices for its use, nor for any infringements of patents or other rights of third parties which may result from its use. No license is granted by implication or otherwise under any patent or patent rights of Analog Devices.

One Technology Way, P.O. Box 9106, Norwood, MA 02062-9106, U.S.A.
Tel: 781/329-4700 World Wide Web Site: http://www.analog.com
Fax: 781/326-8703 **© Analog Devices, Inc., 2001**

The ADSP-2186L's flexible architecture and comprehensive instruction set allow the processor to perform multiple operations in parallel. In one processor cycle the ADSP-2186L can:

- Generate the next program address
- Fetch the next instruction
- Perform one or two data moves
- Update one or two data address pointers
- Perform a computational operation

This takes place while the processor continues to:

- Receive and transmit data through the two serial ports
- Receive and/or transmit data through the internal DMA port
- Receive and/or transmit data through the byte DMA port
- Decrement timer

Development System

The ADSP-2100 Family Development Software, a complete set of tools for software and hardware system development, supports the ADSP-2186L. The Assembler has an algebraic syntax that is easy to program and debug. The Linker combines object files into an executable file. The Simulator provides an interactive instruction- level simulation with a reconfigurable user interface to display different portions of the hardware environment. A PROM Splitter generates PROM programmer compatible files. The C Compiler, based on the Free Software Foundation's GNU C Compiler, generates ADSP-2186L assembly source code. The source code debugger allows programs to be corrected in the C environment. The Runtime Library includes over 100 ANSI-standard mathematical and DSP-specific functions.

The EZ-KIT Lite is a hardware/software kit offering a complete development environment for the ADSP-218x family: an ADSP-218x-based evaluation board with PC monitor software plus Assembler, Linker, Simulator, and PROM Splitter software. The ADSP-218x EZ-KIT Lite is a low-cost, easy-to-use hardware platform on which you can quickly get started with your DSP software design. The EZ-KIT Lite includes the following features:

- 75 MHz ADSP-2189M
- Full 16-bit Stereo Audio I/O with AD73322 Codec
- RS-232 Interface
- EZ-ICE Connector for Emulator Control
- DSP Demo Programs
- Evaluation Suite of Visual DSP

The ADSP-218x EZ-ICE Emulator aids in the hardware debugging of an ADSP-2186L system. The emulator consists of hardware, host computer resident software, and the target board connector. The ADSP-2186L integrates on-chip emulation support with a 14-pin ICE-Port interface. This interface provides a simpler target board connection that requires fewer mechanical clearance considerations than other ADSP-2100 Family EZ-ICEs. The ADSP-2186L device need not be removed from the target system when using the EZ-ICE, nor are any adapters needed. Due to the small footprint of the EZ-ICE connector, emulation can be supported in final board designs.

The EZ-ICE performs a full range of functions, including:

- In-target operation
- Up to 20 breakpoints
- Single-step or full-speed operation
- Registers and memory values can be examined and altered
- PC upload and download functions
- Instruction-level emulation of program booting and execution
- Complete assembly and disassembly of instructions
- C source-level debugging

See Designing An EZ-ICE-Compatible Target System in the *ADSP-2100 Family EZ-Tools Manual* (ADSP-2181 sections), as well as the Target Board Connector for EZ-ICE Probe section of this data sheet, for the exact specifications of the EZ-ICE target board connector.

Additional Information

This data sheet provides a general overview of ADSP-2186L functionality. For additional information on the architecture and instruction set of the processor, refer to the *ADSP-218x DSP Hardware Reference*. For more information about the development tools, refer to the *ADSP-2100 Family Development Tools Data Sheet*.

ARCHITECTURE OVERVIEW

The ADSP-2186L instruction set provides flexible data moves and multifunction (one or two data moves with a computation) instructions. Every instruction can be executed in a single processor cycle. The ADSP-2186L assembly language uses an algebraic syntax for ease of coding and readability. A comprehensive set of development tools supports program development.

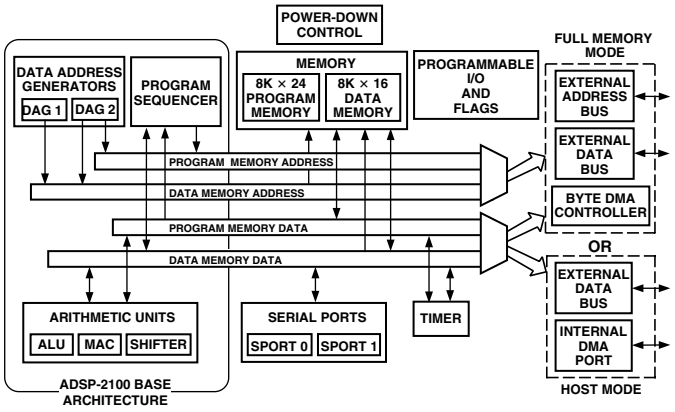

Figure 1. Block Diagram

Figure 1 is an overall block diagram of the ADSP-2186L. The processor contains three independent computational units: the ALU, the multiplier/accumulator (MAC) and the shifter. The computational units process 16-bit data directly and have provisions to support multiprecision computations. The ALU performs a standard set of arithmetic and logic operations; division primitives are also supported. The MAC performs single-cycle multiply, multiply/add and multiply/subtract operations with 40 bits of accumulation. The shifter performs logical and arithmetic shifts, normalization, denormalization and derive exponent operations.

The shifter can be used to efficiently implement numeric format control including multiword and block floating-point representations.

The internal result (R) bus connects the computational units so the output of any unit may be the input of any unit on the next cycle.

SoundPort and EZ-ICE are registered trademarks of Analog Devices, Inc.

A powerful program sequencer and two dedicated data address generators ensure efficient delivery of operands to these computational units. The sequencer supports conditional jumps, subroutine calls and returns in a single cycle. With internal loop counters and loop stacks, the ADSP-2186L executes looped code with zero overhead; no explicit jump instructions are required to maintain loops.

Two data address generators (DAGs) provide addresses for simultaneous dual operand fetches from data memory and program memory. Each DAG maintains and updates four address pointers. Whenever the pointer is used to access data (indirect addressing), it is post-modified by the value of one of four possible modify registers. A length value may be associated with each pointer to implement automatic modulo addressing for circular buffers.

Efficient data transfer is achieved with the use of five internal buses:

- Program Memory Address (PMA) Bus
- Program Memory Data (PMD) Bus
- Data Memory Address (DMA) Bus
- Data Memory Data (DMD) Bus
- Result (R) Bus

The two address buses (PMA and DMA) share a single external address bus, allowing memory to be expanded off-chip, and the two data buses (PMD and DMD) share a single external data bus. Byte memory space and I/O memory space also share the external buses.

Program memory can store both instructions and data, permitting the ADSP-2186L to fetch two operands in a single cycle, one from program memory and one from data memory. The ADSP-2186L can fetch an operand from program memory and the next instruction in the same cycle.

When configured in host mode, the ADSP-2186L has a 16-bit Internal DMA port (IDMA port) for connection to external systems. The IDMA port is made up of 16 data/address pins and five control pins. The IDMA port provides transparent, direct access to the DSPs on-chip program and data RAM.

An interface to low cost byte-wide memory is provided by the Byte DMA port (BDMA port). The BDMA port is bidirectional and can directly address up to four megabytes of external RAM or ROM for off-chip storage of program overlays or data tables.

The byte memory and I/O memory space interface supports slow memories and I/O memory-mapped peripherals with programmable wait state generation. External devices can gain control of external buses with bus request/grant signals ($\overline{BR}$, $\overline{BGH}$ and $\overline{BG}$). One execution mode (Go Mode) allows the ADSP-2186L to continue running from on-chip memory. Normal execution mode requires the processor to halt while buses are granted.

The ADSP-2186L can respond to 11 interrupts. There are up to six external interrupts (one edge-sensitive, two level-sensitive and three configurable) and seven internal interrupts generated by the timer, the serial ports (SPORTs), the Byte DMA port and the power-down circuitry. There is also a master $\overline{RESET}$ interrupt. The two serial ports provide a complete synchronous serial interface with optional companding in hardware and a wide variety of framed or frameless data transmit and receive modes of operation.

Each port can generate an internal programmable serial clock or accept an external serial clock.

The ADSP-2186L provides up to 13 general-purpose flag pins. The data input and output pins on SPORT1 can be alternatively configured as an input flag and an output flag. In addition, eight flags are programmable as inputs or outputs, and three flags are always outputs.

A programmable interval timer generates periodic interrupts. A 16-bit count register (TCOUNT) decrements every *n* processor cycles, where *n* is a scaling value stored in an 8-bit register (TSCALE). When the value of the count register reaches zero, an interrupt is generated and the count register is reloaded from a 16-bit period register (TPERIOD).

Serial Ports

The ADSP-2186L incorporates two complete synchronous serial ports (SPORT0 and SPORT1) for serial communications and multiprocessor communication.

Here is a brief list of the capabilities of the ADSP-2186L SPORTs. For additional information on Serial Ports, refer to the *ADSP-218x DSP Hardware Reference*.

- SPORTs are bidirectional and have a separate, double-buffered transmit and receive section.
- SPORTs can use an external serial clock or generate their own serial clock internally.
- SPORTs have independent framing for the receive and transmit sections. Sections run in a frameless mode or with frame synchronization signals internally or externally generated. Frame sync signals are active high or inverted, with either of two pulsewidths and timings.
- SPORTs support serial data word lengths from 3 to 16 bits and provide optional A-law and μ-law companding according to CCITT recommendation G.711.
- SPORT receive and transmit sections can generate unique interrupts on completing a data word transfer.
- SPORTs can receive and transmit an entire circular buffer of data with only one overhead cycle per data word. An interrupt is generated after a data buffer transfer.
- SPORT0 has a multichannel interface to selectively receive and transmit a 24- or 32-word, time-division multiplexed, serial bitstream.
- SPORT1 can be configured to have two external interrupts ($\overline{IRQ0}$ and $\overline{IRQ1}$) and the Flag In and Flag Out signals. The internally generated serial clock may still be used in this configuration.

PIN DESCRIPTIONS

The ADSP-2186L is available in a 100-lead LQFP and a 144-ball Mini-BGA package. In order to maintain maximum functionality and reduce package size and pin count, some serial port, programmable flag, interrupt and external bus pins have dual, multiplexed functionality. The external bus pins are configured during $\overline{RESET}$ only, while serial port pins are software configurable during program execution. Flag and interrupt functionality is retained concurrently on multiplexed pins. In cases where pin functionality is reconfigurable, the default state is shown in plain text; alternate functionality is shown in italics.

Common-Mode Pins

Pin Name(s)	# of Pins	Input/ Output	Function
$\overline{\text{RESET}}$	1	I	Processor Reset Input
$\overline{\text{BR}}$	1	I	Bus Request Input
$\overline{\text{BG}}$	1	O	Bus Grant Output
$\overline{\text{BGH}}$	1	O	Bus Grant Hung Output
$\overline{\text{DMS}}$	1	O	Data Memory Select Output
$\overline{\text{PMS}}$	1	O	Program Memory Select Output
$\overline{\text{IOMS}}$	1	O	Memory Select Output
$\overline{\text{BMS}}$	1	O	Byte Memory Select Output
$\overline{\text{CMS}}$	1	O	Combined Memory Select Output
$\overline{\text{RD}}$	1	O	Memory Read Enable Output
$\overline{\text{WR}}$	1	O	Memory Write Enable Output
$\overline{\text{IRQ2}}$/	1	I	Edge- or Level-Sensitive Interrupt Request[1]
PF7		I/O	Programmable I/O Pin
$\overline{\text{IRQL0}}$/	1	I	Level-Sensitive Interrupt Requests[1]
PF5		I/O	Programmable I/O Pin
$\overline{\text{IRQL1}}$/	1	I	Level-Sensitive Interrupt Requests[1]
PF6		I/O	Programmable I/O Pin
$\overline{\text{IRQE}}$/	1	I	Edge-Sensitive Interrupt Requests[1]
PF4		I/O	Programmable I/O Pin
PF3	1	I/O	Programmable I/O Pin
Mode C/	1	I	Mode Select Input—Checked only During $\overline{\text{RESET}}$
PF2		I/O	Programmable I/O Pin During Normal Operation
Mode B/	1	I	Mode Select Input—Checked only During $\overline{\text{RESET}}$
PF1		I/O	Programmable I/O Pin During Normal Operation
Mode A/	1	I	Mode Select Input—Checked only During $\overline{\text{RESET}}$
PF0		I/O	Programmable I/O Pin During Normal Operation
CLKIN, XTAL	2	I	Clock or Quartz Crystal Input
CLKOUT	1	O	Processor Clock Output
SPORT0	5	I/O	Serial Port I/O Pins
SPORT1	5	I/O	Serial Port I/O Pins
$\overline{\text{IRQ1:0}}$ FI, FO			Edge- or Level-Sensitive Interrupts, Flag In, Flag Out[2]
$\overline{\text{PWD}}$	1	I	Power-Down Control Input
PWDACK	1	O	Power-Down Control Output
FL0, FL1, FL2	3	O	Output Flags
V_{DD}	6	I	Power (LQFP)
GND	10	I	Ground (LQFP)
V_{DD}	11	I	Power (Mini-BGA)
GND	20	I	Ground (Mini-BGA)
EZ-Port	9	I/O	For Emulation Use[3]

NOTES
[1]Interrupt/Flag pins retain both functions concurrently. If IMASK is set to enable the corresponding interrupts, the DSP will vector to the appropriate interrupt vector address when the pin is asserted, either by external devices or set as a programmable flag.
[2]SPORT configuration determined by the DSP System Control Register. Software configurable.
[3]See Designing an EZ-ICE-Compatible System in this data sheet for complete information.

Memory Interface Pins

The ADSP-2186L processor can be used in one of two modes: Full Memory Mode, which allows BDMA operation with full external overlay memory and I/O capability, or Host Mode, which allows IDMA operation with limited external addressing capabilities. The operating mode is determined by the state of the Mode C pin during $\overline{\text{RESET}}$ and cannot be changed while the processor is running. (See Table VI for complete mode operation descriptions.)

Full Memory Mode Pins (Mode C = 0)

Pin Name	# of Pins	Input/ Output	Function
A13:0	14	O	Address Output Pins for Program, Data, Byte and I/O Spaces
D23:0	24	I/O	Data I/O Pins for Program, Data, Byte and I/O Spaces (8 MSBs Are Also Used as Byte Memory Addresses)

Host Mode Pins (Mode C = 1)

Pin Name	# of Pins	Input/ Output	Function
IAD15:0	16	I/O	IDMA Port Address/Data Bus
A0	1	O	Address Pin for External I/O, Program, Data or Byte Access
D23:8	16	I/O	Data I/O Pins for Program, Data Byte and I/O Spaces
$\overline{\text{IWR}}$	1	I	IDMA Write Enable
$\overline{\text{IRD}}$	1	I	IDMA Read Enable
IAL	1	I	IDMA Address Latch Pin
$\overline{\text{IS}}$	1	I	IDMA Select
$\overline{\text{IACK}}$	1	O	IDMA Port Acknowledge

In Host Mode, external peripheral addresses can be decoded using the A0, $\overline{\text{CMS}}$, $\overline{\text{PMS}}$, $\overline{\text{DMS}}$ and $\overline{\text{IOMS}}$ signals.

Terminating Unused Pin

The following table shows the recommendations for terminating unused pins.

Pin Terminations

Pin Name	I/O 3-State (Z)	Reset State	Hi-Z* Caused By	Unused Configuration
XTAL	I	I		Float
CLKOUT	O	O		Float
A13:1 or	O (Z)	Hi-Z	$\overline{\text{BR}}$, $\overline{\text{EBR}}$	Float
IAD12:0	I/O (Z)	Hi-Z	$\overline{\text{IS}}$	Float
A0	O (Z)	Hi-Z	$\overline{\text{BR}}$, $\overline{\text{EBR}}$	Float
D23:8	I/O (Z)	Hi-Z	$\overline{\text{BR}}$, $\overline{\text{EBR}}$	Float
D7 or	I/O (Z)	Hi-Z	$\overline{\text{BR}}$, $\overline{\text{EBR}}$	Float
$\overline{\text{IWR}}$	I	I		High (Inactive)
D6 or	I/O (Z)	Hi-Z	$\overline{\text{BR}}$, $\overline{\text{EBR}}$	Float
$\overline{\text{IRD}}$	I	I	$\overline{\text{BR}}$, $\overline{\text{EBR}}$	High (Inactive)
D5 or	I/O (Z)	Hi-Z		Float
IAL	I	I		Low (Inactive)

Pin Terminations (Continued)

Pin Name	I/O 3-State (Z)	Reset State	Hi-Z* Caused By	Unused Configuration
D4 or	I/O (Z)	Hi-Z	$\overline{BR}$, $\overline{EBR}$	Float
$\overline{IS}$	I	I		High (Inactive)
D3 or	I/O (Z)	Hi-Z	$\overline{BR}$, $\overline{EBR}$	Float
$\overline{IACK}$				Float
D2:0 or	I/O (Z)	Hi-Z	$\overline{BR}$, $\overline{EBR}$	Float
IAD15:13	I/O (Z)	Hi-Z	$\overline{IS}$	Float
$\overline{PMS}$	O (Z)	O	$\overline{BR}$, $\overline{EBR}$	Float
$\overline{DMS}$	O (Z)	O	$\overline{BR}$, $\overline{EBR}$	Float
$\overline{BMS}$	O (Z)	O	$\overline{BR}$, $\overline{EBR}$	Float
$\overline{IOMS}$	O (Z)	O	$\overline{BR}$, $\overline{EBR}$	Float
$\overline{CMS}$	O (Z)	O	$\overline{BR}$, $\overline{EBR}$	Float
$\overline{RD}$	O (Z)	O	$\overline{BR}$, $\overline{EBR}$	Float
$\overline{WR}$	O (Z)	O	$\overline{BR}$, $\overline{EBR}$	Float
$\overline{BR}$	I	I		High (Inactive)
$\overline{BG}$	O (Z)	O	EE	Float
$\overline{BGH}$	O	O		Float
$\overline{IRQ2}$/*PF7*	I/O (Z)	I		Input = High (Inactive) or Program as Output, Set to 1, Let Float
$\overline{IRQL1}$/*PF6*	I/O (Z)	I		Input = High (Inactive) or Program as Output, Set to 1, Let Float
$\overline{IRQL0}$/*PF5*	I/O (Z)	I		Input = High (Inactive) or Program as Output, Set to 1, Let Float
$\overline{IRQE}$/*PF4*	I/O (Z)	I		Input = High (Inactive) or Program as Output, Set to 1, Let Float
SCLK0	I/O	I		Input = High or Low, Output = Float
RFS0	I/O	I		High or Low
DR0	I	I		High or Low
TFS0	I/O	O		High or Low
DT0	O	O		Float
SCLK1	I/O	I		Input = High or Low, Output = Float
RFS1/$\overline{IRQ0}$	I/O	I		High or Low
DR1/FI	I	I		High or Low
TFS1/$\overline{IRQ1}$	I/O	O		High or Low
DT1/FO	O	O		Float
EE	I	I		
$\overline{EBR}$	I	I		
$\overline{EBG}$	O	O		
$\overline{ERESET}$	I	I		
$\overline{EMS}$	O	O		
$\overline{EINT}$	I	I		
ECLK	I	I		
ELIN	I	I		
ELOUT	O	O		

NOTES
*Hi-Z = High Impedance.
1. If the CLKOUT pin is not used, turn it OFF, using CLKODIS in Sport0 autobuffer control register.
2. If the Interrupt/Programmable Flag pins are not used, there are two options:
   Option 1: When these pins are configured as INPUTS at reset and function as interrupts and input flag pins, pull the pins High (inactive).
   Option 2: Program the unused pins as OUTPUTS, set them to 1, and let them float.
3. All bidirectional pins have three-stated outputs. When the pin is configured as an output, the output is Hi-Z (high impedance) when inactive.
4. CLKIN, $\overline{RESET}$, and PF3:0 are not included in the table because these pins must be used.

Setting Memory Mode

Memory Mode selection for the ADSP-2186L is made during chip reset through the use of the Mode C pin. This pin is multiplexed with the DSP's PF2 pin, so care must be taken in how the mode selection is made. The two methods for selecting the value of Mode C are passive and active.

Passive configuration involves the use of a pull-up or pull-down resistor connected to the Mode C pin. To minimize power consumption, or if the PF2 pin is to be used as an output in the DSP application, a weak pull-up or pull-down, on the order of 100 kΩ, can be used. This value should be sufficient to pull the pin to the desired level and still allow the pin to operate as a programmable flag output without undue strain on the processor's output driver. For minimum power consumption during power-down, reconfigure PF2 to be an input, as the pull-up or pull-down will hold the pin in a known state, and will not switch.

Active configuration involves the use of a three-stateable external driver connected to the Mode C pin. A driver's output enable should be connected to the DSP's $\overline{RESET}$ signal such that it only drives the PF2 pin when $\overline{RESET}$ is active (low). After $\overline{RESET}$ is deasserted, the driver should three-state, thus allowing full use of the PF2 pin as either an input or output.

To minimize power consumption during power-down, configure the programmable flag as an output when connected to a three-stated buffer. This ensures that the pin will be held at a constant level and not oscillate should the three-state driver's level hover around the logic switching point.

Interrupts

The interrupt controller allows the processor to respond to the thirteen possible interrupts (eleven of which can be enabled at any one time), and $\overline{RESET}$ with minimum overhead. The ADSP-2186L provides four dedicated external interrupt input pins, $\overline{IRQ2}$, $\overline{IRQL0}$, $\overline{IRQL1}$ and $\overline{IRQE}$ (shared with the PF7:4 pins). In addition, SPORT1 may be reconfigured for $\overline{IRQ0}$, $\overline{IRQ1}$, FI and FO, for a total of six external interrupts. The ADSP-2186L also supports internal interrupts from the timer, the byte DMA port, the two serial ports, software and the power-down control circuit. The interrupt levels are internally prioritized and individually maskable (except power-down and $\overline{RESET}$). The $\overline{IRQ2}$, $\overline{IRQ0}$ and $\overline{IRQ1}$ input pins can be programmed to be either level- or edge-sensitive. $\overline{IRQL0}$ and $\overline{IRQL1}$ are level-sensitive and IRQE is edge-sensitive. The priorities and vector addresses of all interrupts are shown in Table I.

Table I. Interrupt Priority and Interrupt Vector Addresses

Source Of Interrupt	Interrupt Vector Address (Hex)
$\overline{RESET}$ (or Power-Up with PUCR = 1)	0000 (Highest Priority)
Power-Down (Nonmaskable)	002C
$\overline{IRQ2}$	0004
$\overline{IRQL1}$	0008
$\overline{IRQL0}$	000C
SPORT0 Transmit	0010
SPORT0 Receive	0014
$\overline{IRQE}$	0018
BDMA Interrupt	001C
SPORT1 Transmit or $\overline{IRQ1}$	0020
SPORT1 Receive or $\overline{IRQ0}$	0024
Timer	0028 (Lowest Priority)

Interrupt routines can either be nested, with higher priority interrupts taking precedence, or processed sequentially. Interrupts can be masked or unmasked with the IMASK register. Individual interrupt requests are logically ANDed with the bits in IMASK; the highest priority unmasked interrupt is then selected. The power-down interrupt is nonmaskable.

The ADSP-2186L masks all interrupts for one instruction cycle following the execution of an instruction that modifies the IMASK register. This does not affect serial port autobuffering or DMA transfers.

The interrupt control register, ICNTL, controls interrupt nesting and defines the $\overline{\text{IRQ0}}$, $\overline{\text{IRQ1}}$ and $\overline{\text{IRQ2}}$ external interrupts to be either edge- or level-sensitive. The $\overline{\text{IRQE}}$ pin is an external edge-sensitive interrupt and can be forced and cleared. The $\overline{\text{IRQL0}}$ and $\overline{\text{IRQL1}}$ pins are external level-sensitive interrupts.

The IFC register is a write-only register used to force and clear interrupts.

On-chip stacks preserve the processor status and are automatically maintained during interrupt handling. The stacks are twelve levels deep to allow interrupt, loop and subroutine nesting.

The following instructions allow global enable or disable servicing of the interrupts (including power-down), regardless of the state of IMASK. Disabling the interrupts does not affect serial port autobuffering or DMA.

ENA INTS;

DIS INTS;

When the processor is reset, interrupt servicing is enabled.

LOW POWER OPERATION

The ADSP-2186L has three low power modes that significantly reduce the power dissipation when the device operates under standby conditions. These modes are:

- Power-Down
- Idle
- Slow Idle

The CLKOUT pin may also be disabled to reduce external power dissipation.

Power-Down

The ADSP-2186L processor has a low power feature that lets the processor enter a very low power dormant state through hardware or software control. Following is a brief list of power-down features. Refer to the *ADSP-218x DSP Hardware Reference*, "System Interface" chapter, for detailed information about the power-down feature.

- Quick recovery from power-down. The processor begins executing instructions in as few as 400 CLKIN cycles.
- Support for an externally generated TTL or CMOS processor clock. The external clock can continue running during power-down without affecting the lowest power rating and 400 CLKIN cycle recovery.
- Support for crystal operation includes disabling the oscillator to save power (the processor automatically waits approximately 4096 CLKIN cycles for the crystal oscillator to start or stabilize), and letting the oscillator run to allow 400 CLKIN cycle start-up.
- Power-down is initiated by either the power-down pin ($\overline{\text{PWD}}$) or the software power-down force bit.
- Interrupt support allows an unlimited number of instructions to be executed before optionally powering down. The power-down interrupt also can be used as a nonmaskable, edge-sensitive interrupt.
- Context clear/save control allows the processor to continue where it left off or start with a clean context when leaving the power-down state.
- The $\overline{\text{RESET}}$ pin also can be used to terminate power-down.
- Power-down acknowledge (PWDACK) pin indicates when the processor has entered power-down.

Idle

When the ADSP-2186L is in the Idle Mode, the processor waits indefinitely in a low power state until an interrupt occurs. When an unmasked interrupt occurs, it is serviced; execution then continues with the instruction following the IDLE instruction. In Idle mode IDMA, BDMA and autobuffer cycle steals still occur.

Slow Idle

The IDLE instruction is enhanced on the ADSP-2186L to let the processor's internal clock signal be slowed, further reducing power consumption. The reduced clock frequency, a programmable fraction of the normal clock rate, is specified by a selectable divisor given in the IDLE instruction. The format of the instruction is:

IDLE (n)

where n = 16, 32, 64 or 128. This instruction keeps the processor fully functional, but operating at the slower clock rate. While it is in this state, the processor's other internal clock signals such as SCLK, CLKOUT and timer clock, are reduced by the same ratio. The default form of the instruction, when no clock divisor is given, is the standard IDLE instruction.

When the *IDLE (n)* instruction is used, it effectively slows down the processor's internal clock and thus its response time to incoming interrupts. The one-cycle response time of the standard idle state is increased by n, the clock divisor. When an enabled interrupt is received, the ADSP-2186L will remain in the idle state for up to a maximum of n processor cycles (n = 16, 32, 64 or 128) before resuming normal operation.

When the *IDLE (n)* instruction is used in systems that have an externally generated serial clock (SCLK), the serial clock rate may be faster than the processor's reduced internal clock rate. Under these conditions, interrupts must not be generated at a faster rate than can be serviced due to the additional time the processor takes to come out of the idle state (a maximum of n processor cycles).

SYSTEM INTERFACE

Figure 2 shows typical basic system configurations with the ADSP-2186L, two serial devices, a byte-wide EPROM and optional external program and data overlay memories (mode selectable). Programmable wait state generation allows the processor to connect easily to slow peripheral devices. The ADSP-2186L also provides four external interrupts and two serial ports or six external interrupts and one serial port. Host Memory Mode allows access to the full external data bus, but limits addressing to a single address bit (A0). Additional system peripherals can be added in this mode through the use of external hardware to generate and latch address signals.

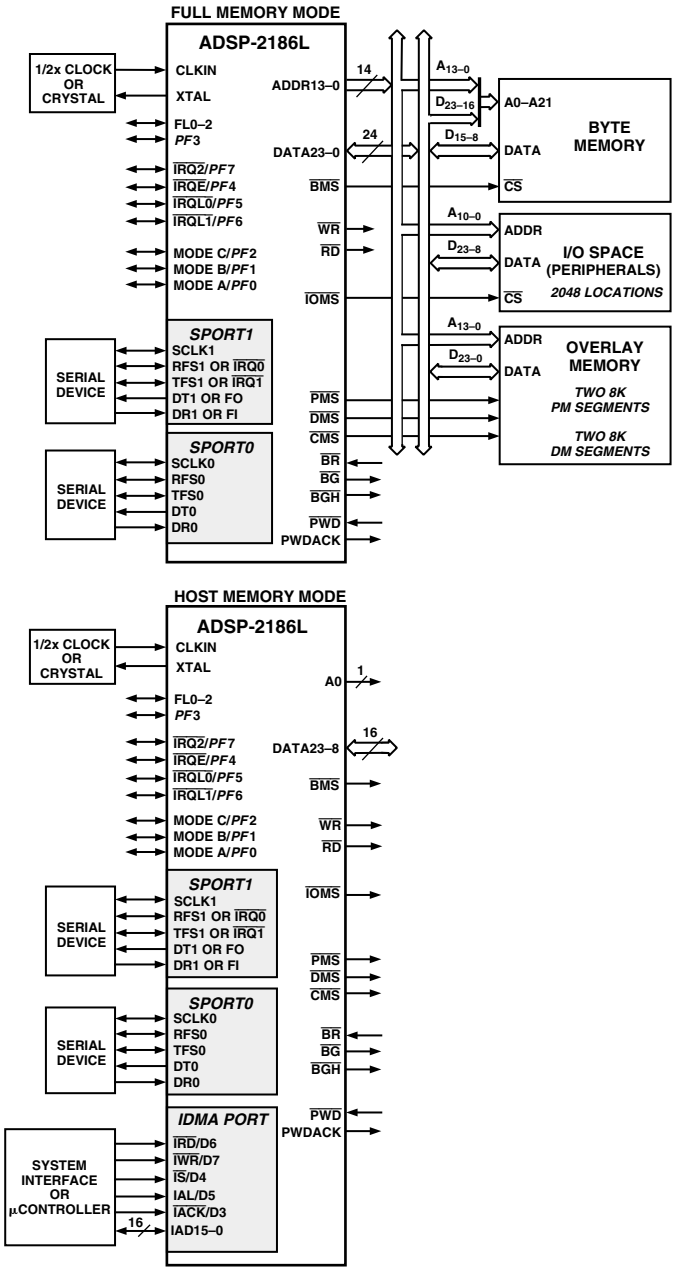

Figure 2. Basic System Configuration

Clock Signals

The ADSP-2186L can be clocked by either a crystal or a TTL-compatible clock signal.

The CLKIN input cannot be halted, changed during operation or operated below the specified frequency during normal operation. The only exception is while the processor is in the power-down state. For additional information on the power-down feature, refer to the *ADSP-218x DSP Hardware Reference.*

If an external clock is used, it should be a TTL-compatible signal running at half the instruction rate. The signal is connected to the processor's CLKIN input. When an external clock is used, the XTAL input must be left unconnected.

The ADSP-2186L uses an input clock with a frequency equal to half the instruction rate; a 0.20 MHz input clock yields a 25 ns processor cycle (which is equivalent to 40 MHz). Normally, instructions are executed in a single processor cycle. All device timing is relative to the internal instruction clock rate, which is indicated by the CLKOUT signal when enabled.

Because the ADSP-2186L includes an on-chip oscillator circuit, an external crystal may be used. The crystal should be connected across the CLKIN and XTAL pins, with two capacitors connected as shown in Figure 3. Capacitor values are dependent on crystal type and should be specified by the crystal manufacturer. A parallel-resonant, fundamental frequency, microprocessor-grade crystal should be used.

A clock output (CLKOUT) signal is generated by the processor at the processor's cycle rate. This can be enabled and disabled by the CLKODIS bit in the SPORT0 Autobuffer Control Register.

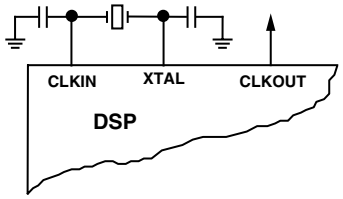

Figure 3. External Crystal Connections

Reset

The $\overline{\text{RESET}}$ signal initiates a master reset of the ADSP-2186L. The $\overline{\text{RESET}}$ signal must be asserted during the power-up sequence to assure proper initialization. $\overline{\text{RESET}}$ during initial power-up must be held long enough to allow the internal clock to stabilize. If $\overline{\text{RESET}}$ is activated any time after power-up, the clock continues to run and does not require stabilization time.

The power-up sequence is defined as the total time required for the crystal oscillator circuit to stabilize after a valid V_{DD} is applied to the processor, and for the internal phase-locked loop (PLL) to lock onto the specific crystal frequency. A minimum of 2000 CLKIN cycles ensures that the PLL has locked, but does not include the crystal oscillator start-up time. During this power-up sequence the $\overline{\text{RESET}}$ signal should be held low. On any subsequent resets, the $\overline{\text{RESET}}$ signal must meet the minimum pulsewidth specification, t_{RSP}.

The $\overline{\text{RESET}}$ input contains some hysteresis; however, if an RC circuit is used to generate the $\overline{\text{RESET}}$ signal, an external Schmidt trigger is recommended.

The master $\overline{\text{RESET}}$ sets all internal stack pointers to the empty stack condition, masks all interrupts and clears the MSTAT register. When $\overline{\text{RESET}}$ is released, if there is no pending bus request and the chip is configured for booting, the boot-loading sequence is performed. The first instruction is fetched from on-chip program memory location 0x0000 once boot loading completes. In an EZ-ICE-compatible system $\overline{\text{RESET}}$ and $\overline{\text{ERESET}}$ have the same functionality. For complete information, see Designing an EZ-ICE-Compatible System section.

MEMORY ARCHITECTURE

The ADSP-2186L provides a variety of memory and peripheral interface options. The key functional groups are Program Memory, Data Memory, Byte Memory and I/O.

Program Memory (Full Memory Mode) is a 24-bit-wide space for storing both instruction opcodes and data. The ADSP-2186L has 8K words of Program Memory RAM on chip, and the capability of accessing up to two 8K external memory overlay spaces using the external data bus. Both an instruction opcode and a data value can be read from on-chip program memory in a single cycle.

Data Memory (Full Memory Mode) is a 16-bit-wide space used for the storage of data variables and for memory-mapped control registers. The ADSP-2186L has 8K words on Data Memory RAM on chip, consisting of 8160 user-accessible locations and 32 memory-mapped registers. Support also exists for up to two 8K external memory overlay spaces through the external data bus.

Byte Memory (Full Memory Mode) provides access to an 8-bit wide memory space through the Byte DMA (BDMA) port. The Byte Memory interface provides access to 4 MBytes of memory by utilizing eight data lines as additional address lines. This gives the BDMA Port an effective 22-bit address range. On power-up, the DSP can automatically load bootstrap code from byte memory.

I/O Space (Full Memory Mode) allows access to 2048 locations of 16-bit-wide data. It is intended to be used to communicate with parallel peripheral devices such as data converters and external registers or latches.

Program Memory

The ADSP-2186L contains an 8K × 24 on-chip program RAM. The on-chip program memory is designed to allow up to two accesses each cycle so that all operations can complete in a single cycle. In addition, the ADSP-2186L allows the use of 8K external memory overlays.

The program memory space organization is controlled by the Mode B pin and the PMOVLAY register. Normally, the ADSP-2186L is configured with Mode B = 0 and program memory organized as shown in Figure 4.

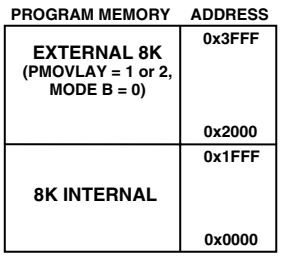

Figure 4. Program Memory (Mode B = 0)

There are 8K words of memory accessible internally when the PMOVLAY register is set to 0. When PMOVLAY is set to something other than 0, external accesses occur at addresses 0x2000 through 0x3FFF. The external address is generated as shown in Table II.

Table II. PMOVLAY Addressing

PMOVLAY	Memory	A13	A12:0
0	Reserved	Not Applicable	Not Applicable
1	External Overlay 1	0	13 LSBs of Address Between 0x2000 and 0x3FFF
2	External Overlay 2	1	13 LSBs of Address Between 0x2000 and 0x3FFF

NOTE: Addresses 0x2000 through 0x3FFF should not be accessed when PMOVLAY = 0.

This organization provides for two external 8K overlay segments using only the normal 14 address bits, which allows for simple program overlays using one of the two external segments in place of the on-chip memory. Care must be taken in using this overlay space in that the processor core (i.e., the sequencer) does not take into account the PMOVLAY register value. For example, if a loop operation is occurring on one of the external overlays and the program changes to another external overlay or internal memory, an incorrect loop operation could occur. In addition, care must be taken in interrupt service routines as the overlay registers are not automatically saved and restored on the processor mode stack.

When Mode B = 1, booting is disabled and overlay memory is disabled (PMOVLAY must be 0). Figure 5 shows the memory map in this configuration.

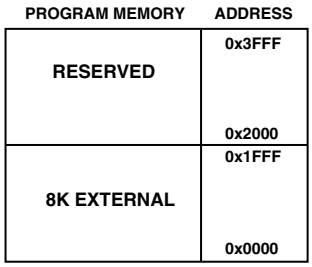

Figure 5. Program Memory (Mode B = 1)

Data Memory

The ADSP-2186L has 8160 16-bit words of internal data memory. In addition, the ADSP-2186L allows the use of 8K external memory overlays. Figure 6 shows the organization of the data memory.

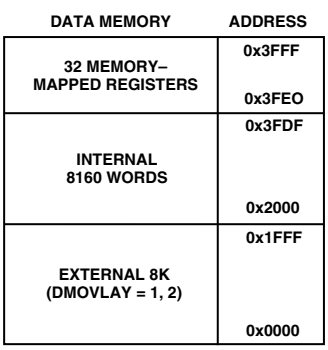

Figure 6. Data Memory

There are 8160 words of memory accessible internally when the DMOVLAY register is set to 0. When DMOVLAY is set to something other than 0, external accesses occur at addresses 0x0000 through 0x1FFF. The external address is generated as shown in Table III.

Table III. DMOVLAY Addressing

DMOVLAY	Memory	A13	A12:0
0	Internal	Not Applicable	Not Applicable
1	External Overlay 1	0	13 LSBs of Address Between 0x0000 and 0x1FFF
2	External Overlay 2	1	13 LSBs of Address Between 0x0000 and 0x1FFF

This organization allows for two external 8K overlays using only the normal 14 address bits. All internal accesses complete in one cycle. Accesses to external memory are timed using the wait states specified by the DWAIT register.

I/O Space (Full Memory Mode)

The ADSP-2186L supports an additional external memory space called I/O space. This space is designed to support simple connections to peripherals or to bus interface ASIC data registers. I/O space supports 2048 locations. The lower eleven bits of the external address bus are used; the upper three bits are undefined. Two instructions were added to the core ADSP-2100 Family instruction set to read from and write to I/O memory space. The I/O space also has four dedicated three-bit wait state registers, IOWAIT0-3, that specify up to seven wait states to be automatically generated for each of four regions. The wait states act on address ranges as shown in Table IV.

Table IV.

Address Range	Wait State Register
0x000–0x1FF	IOWAIT0
0x200–0x3FF	IOWAIT1
0x400–0x5FF	IOWAIT2
0x600–0x7FF	IOWAIT3

Composite Memory Select ($\overline{\text{CMS}}$)

The ADSP-2186L has a programmable memory select signal that is useful for generating memory select signals for memories mapped to more than one space. The $\overline{\text{CMS}}$ signal is generated to have the same timing as each of the individual memory select signals ($\overline{\text{PMS}}$, $\overline{\text{DMS}}$, $\overline{\text{BMS}}$, $\overline{\text{IOMS}}$), but can combine their functionality.

Each bit in the CMSSEL register, when set, causes the $\overline{\text{CMS}}$ signal to be asserted when the selected memory select is asserted. For example, to use a 32K word memory to act as both program and data memory, set the $\overline{\text{PMS}}$ and $\overline{\text{DMS}}$ bits in the CMSSEL register and use the $\overline{\text{CMS}}$ pin to drive the chip select of the memory and use either $\overline{\text{DMS}}$ or $\overline{\text{PMS}}$ as the additional address bit.

The $\overline{\text{CMS}}$ pin functions as the other memory select signal, with the same timing and bus request logic. A 1 in the enable bit causes the assertion of the $\overline{\text{CMS}}$ signal at the same time as the selected memory select signal. All enable bits, except the $\overline{\text{BMS}}$ bit, default to 1 at reset.

Boot Memory Select ($\overline{\text{BMS}}$) Disable

The ADSP-2186L also lets you boot the processor from one external memory space while using a different external memory space for BDMA transfers during normal operation. You can use the $\overline{\text{CMS}}$ to select the first external memory space for BDMA transfers and $\overline{\text{BMS}}$ to select the second external memory space for booting. The $\overline{\text{BMS}}$ signal can be disabled by setting Bit 3 of the System Control Register to 1. The System Control Register is illustrated in Figure 7.

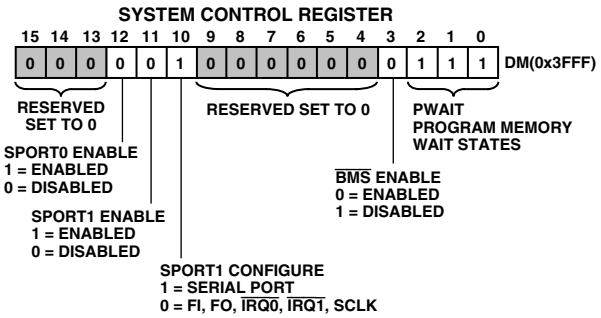

Figure 7. System Control Register

Byte Memory

The byte memory space is a bidirectional, 8-bit-wide, external memory space used to store programs and data. Byte memory is accessed using the BDMA feature. The BDMA Control Register is shown in Figure 8. The byte memory space consists of 256 pages, each of which is 16K × 8.

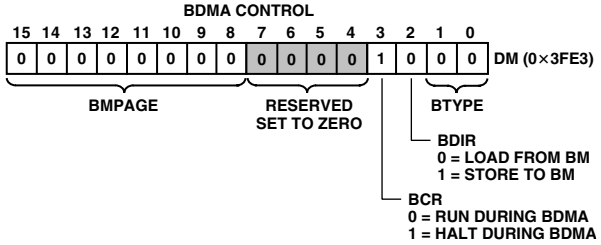

Figure 8. BDMA Control Register

The byte memory space on the ADSP-2186L supports read and write operations as well as four different data formats. The byte memory uses data bits 15:8 for data. The byte memory uses data bits 23:16 and address bits 13:0 to create a 22-bit address. This allows up to a 4 meg × 8 (32 megabit) ROM or RAM to be used without glue logic. All byte memory accesses are timed by the BMWAIT register.

Byte Memory DMA (BDMA, Full Memory Mode)

The byte memory DMA controller allows loading and storing of program instructions and data using the byte memory space. The BDMA circuit is able to access the byte memory space while the processor is operating normally and steals only one DSP cycle per 8-, 16- or 24-bit word transferred.

The BDMA circuit supports four different data formats, that are selected by the BTYPE register field. The appropriate number of 8-bit accesses is determined from the byte memory space to build the word size selected. Table V shows the data formats supported by the BDMA circuit.

Table V. BDMA Data Formats

BTYPE	Internal Memory Space	Word Size	Alignment
00	Program Memory	24	Full Word
01	Data Memory	16	Full Word
10	Data Memory	8	MSBs
11	Data Memory	8	LSBs

Unused bits in the 8-bit data memory formats are filled with 0s. The BIAD register field is used to specify the starting address for the on-chip memory involved with the transfer. The 14-bit BEAD register specifies the starting address for the external byte memory space. The 8-bit BMPAGE register specifies the starting page for the external byte memory space. The BDIR register field selects the direction of the transfer. Finally the 14-bit BWCOUNT register specifies the number of DSP words to transfer and initiates the BDMA circuit transfers.

BDMA accesses can cross page boundaries during sequential addressing. A BDMA interrupt is generated on the completion of the number of transfers specified by the BWCOUNT register. The BWCOUNT register is updated after each transfer so it can be used to check the status of the transfers. When it reaches zero, the transfers have finished and a BDMA interrupt is generated. The BMPAGE and BEAD registers must not be accessed by the DSP during BDMA operations.

The source or destination of a BDMA transfer will always be on-chip program or data memory, regardless of the values of Mode B, PMOVLAY or DMOVLAY.

When the BWCOUNT register is written with a nonzero value, the BDMA circuit starts executing byte memory accesses with wait states set by BMWAIT. These accesses continue until the count reaches zero. When enough accesses have occurred to create a destination word, it is transferred to or from on-chip memory. The transfer takes one DSP cycle. DSP accesses to external memory have priority over BDMA byte memory accesses.

The BDMA Context Reset bit (BCR) controls whether the processor is held off while the BDMA accesses are occurring. Setting the BCR bit to 0 allows the processor to continue operations. Setting the BCR bit to 1 causes the processor to stop execution while the BDMA accesses are occurring, to clear the context of the processor and start execution at address 0 when the BDMA accesses have completed.

Internal Memory DMA Port (IDMA Port; Host Memory Mode)
The IDMA Port provides an efficient means of communication between a host system and the ADSP-2186L. The port is used to access the on-chip program memory and data memory of the DSP with only one DSP cycle per word overhead. The IDMA port cannot, however, be used to write directly to the DSP's memory-mapped control registers.

The IDMA port has a 16-bit multiplexed address and data bus and supports 24-bit program memory. The IDMA port is completely asynchronous and can be written to while the ADSP-2186L is operating at full speed.

The DSP memory address is latched and then automatically incremented after each IDMA transaction. An external device can therefore access a block of sequentially addressed memory by specifying only the starting address of the block. This increases throughput as the address does not have to be sent for each memory access.

IDMA Port access occurs in two phases. The first is the IDMA Address Latch cycle. When the acknowledge is asserted, a 14-bit address and 1-bit destination type can be driven onto the bus by an external device. The address specifies an on-chip memory location, the destination type specifies whether it is a DM or PM access. The falling edge of the address latch signal latches this value into the IDMAA register.

Once the address is stored, data can then either be read from or written to the ADSP-2186L's on-chip memory. Asserting the select line ($\overline{IS}$) and the appropriate read or write line ($\overline{IRD}$ and $\overline{IWR}$ respectively) signals the ADSP-2186L that a particular transaction is required. In either case, there is a one-processor-cycle delay for synchronization. The memory access consumes one additional processor cycle.

Once an access has occurred, the latched address is automatically incremented and another access can occur.

Through the IDMAA register, the DSP can also specify the starting address and data format for DMA operation.

Bootstrap Loading (Booting)
The ADSP-2186L has two mechanisms to allow automatic loading of the internal program memory after reset. The method for booting is controlled by the Mode A, B and C configuration bits as shown in Table VI. These four states can be compressed into two-state bits by allowing an IDMA boot with Mode C = 1. However, three bits are used to ensure future compatibility with parts containing internal program memory ROM.

BDMA Booting
When the MODE pins specify BDMA booting, the ADSP-2186L initiates a BDMA boot sequence when $\overline{RESET}$ is released.

The BDMA interface is set up during reset to the following defaults when BDMA booting is specified: the BDIR, BMPAGE, BIAD and BEAD registers are set to 0; the BTYPE register is set to 0 to specify program memory 24-bit words; and the BWCOUNT register is set to 32. This causes 32 words of on-chip program memory to be loaded from byte memory. These 32 words are used to set up the BDMA to load in the remaining program code. The BCR bit is also set to 1, which causes program execution to be held off until all 32 words are loaded into on-chip program memory. Execution then begins at address 0.

The ADSP-2100 Family development software (Revision 5.02 and later) fully supports the BDMA booting feature and can generate byte memory space compatible boot code.

The IDLE instruction can also be used to allow the processor to hold off execution while booting continues through the BDMA interface. For BDMA accesses while in Host Mode, the addresses to boot memory must be constructed externally to the ADSP-2186L. The only memory address bit provided by the processor is A0.

Table VI. Boot Summary Table

Mode C	Mode B	Mode A	Booting Method
0	0	0	BDMA feature is used to load the first 32 program memory words from the byte memory space. Program execution is held off until all 32 words have been loaded. Chip is configured in Full Memory Mode.
0	1	0	No Automatic boot operations occur. Program execution starts at external memory location 0. Chip is configured in Full Memory Mode. BDMA can still be used but the processor does not automatically use or wait for these operations.
1	0	0	BDMA feature is used to load the first 32 program memory words from the byte memory space. Program execution is held off until all 32 words have been loaded. Chip is configured in Host Mode. Additional interface hardware is required.
1	0	1	IDMA feature is used to load any internal memory as desired. Program execution is held off until internal program memory location 0 is written to. Chip is configured in Host Mode.

IDMA Booting

The ADSP-2186L can also boot programs through its Internal DMA port. If Mode C = 1, Mode B = 0, and Mode A = 1, the ADSP-2186L boots from the IDMA port. The IDMA feature can load as much on-chip memory as desired. Program execution is held off until on-chip program memory location 0 is written to.

Bus Request and Bus Grant

The ADSP-2186L can relinquish control of the data and address buses to an external device. When the external device requires access to memory, it asserts the bus request ($\overline{BR}$) signal. If the ADSP-2186L is not performing an external memory access, it responds to the active BR input in the following processor cycle by:

- Three-stating the data and address buses and the $\overline{PMS}$, $\overline{DMS}$, $\overline{BMS}$, $\overline{CMS}$, $\overline{IOMS}$, $\overline{RD}$, $\overline{WR}$ output drivers,
- Asserting the bus grant ($\overline{BG}$) signal, and
- Halting program execution.

If Go Mode is enabled, the ADSP-2186L will not halt program execution until it encounters an instruction that requires an external memory access.

If the ADSP-2186L is performing an external memory access when the external device asserts the $\overline{BR}$ signal, it will not three-state the memory interfaces or assert the $\overline{BG}$ signal until the processor cycle after the access completes. The instruction does not need to be completed when the bus is granted. If a single instruction requires two external memory accesses, the bus will be granted between the two accesses.

When the $\overline{BR}$ signal is released, the processor releases the $\overline{BG}$ signal, reenables the output drivers and continues program execution from the point at which it stopped.

The bus request feature operates at all times, including when the processor is booting and when $\overline{RESET}$ is active.

The $\overline{BGH}$ pin is asserted when the ADSP-2186L is ready to execute an instruction but is stopped because the external bus is already granted to another device. The other device can release the bus by deasserting bus request. Once the bus is released, the ADSP-2186L deasserts $\overline{BG}$ and $\overline{BGH}$ and executes the external memory access.

Flag I/O Pins

The ADSP-2186L has eight general purpose programmable input/output flag pins. They are controlled by two memory mapped registers. The PFTYPE register determines the direction, 1 = output and 0 = input. The PFDATA register is used to read and write the values on the pins. Data being read from a pin configured as an input is synchronized to the ADSP-2186L's clock. Bits that are programmed as outputs will read the value being output. The PF pins default to input during reset.

In addition to the programmable flags, the ADSP-2186L has five fixed-mode flags, FI, FO, FL0, FL1, and FL2. FL0-FL2 are dedicated output flags. FI and FO are available as an alternate configuration of SPORT1.

Note: Pins PF0, PF1 and PF2 are also used for device configuration during reset.

BIASED ROUNDING

A mode is available on the ADSP-2186 or ADSP-2186L to allow biased rounding in addition to the normal unbiased rounding. When the BIASRND bit is set to 0, the normal unbiased rounding operations occur. When the BIASRND bit is set to 1, biased rounding occurs instead of the normal unbiased rounding. When operating in biased rounding mode all rounding operations with MR0 set to 0x8000 will round up, rather than only rounding up odd MR1 values.

For example:

Table VII. Biased Rounding Example

MR Value Before RND	Biased RND Result	Unbiased RND Result
00-0000-8000	00-0001-8000	00-0000-8000
00-0001-8000	00-0002-8000	00-0002-8000
00-0000-8001	00-0001-8001	00-0001-8001
00-0001-8001	00-0002-8001	00-0002-8001
00-0000-7FFF	00-0000-7FFF	00-0000-7FFF
00-0001-7FFF	00-0001-7FFF	00-0001-7FFF

This mode only has an effect when the MR0 register contains 0x8000; all other rounding operations work normally. This mode allows more efficient implementation of bit-specified algorithms that use biased rounding, for example the GSM speech compression routines. Unbiased rounding is preferred for most algorithms.

Note: BIASRND bit is Bit 12 of the SPORT0 Autobuffer Control register.

INSTRUCTION SET DESCRIPTION

The ADSP-2186L assembly language instruction set has an algebraic syntax that was designed for ease of coding and readability. The assembly language, which takes full advantage of the processor's unique architecture, offers the following benefits:

- The algebraic syntax eliminates the need to remember cryptic assembler mnemonics. For example, a typical arithmetic add instruction, such as AR = AX0 + AY0, resembles a simple equation.
- Every instruction assembles into a single, 24-bit word that can execute in a single instruction cycle.
- The syntax is a superset ADSP-2100 Family assembly language and is completely source and object code compatible with other family members. Programs may need to be relocated to utilize on-chip memory and conform to the ADSP-2186L's interrupt vector and reset vector map.
- Sixteen condition codes are available. For conditional jump, call, return or arithmetic instructions, the condition can be checked and the operation executed in the same instruction cycle.
- Multifunction instructions allow parallel execution of an arithmetic instruction with up to two fetches or one write to processor memory space during a single instruction cycle.

DESIGNING AN EZ-ICE-COMPATIBLE SYSTEM

The ADSP-2186L has on-chip emulation support and an ICE-Port, a special set of pins that interface to the EZ-ICE. These features allow in-circuit emulation without replacing the target system processor by using only a 14-pin connection from the target system to the EZ-ICE. Target systems must have a 14-pin connector to accept the EZ-ICE's in-circuit probe, a 14-pin plug.

Issuing the chip reset command during emulation causes the DSP to perform a full chip reset, including a reset of its memory mode. Therefore, it is vital that the mode pins are set correctly PRIOR to issuing a chip reset command from the emulator user interface.

If using a passive method of maintaining mode information (as discussed in Setting Memory Modes), it does not matter that the mode information is latched by an emulator reset. However, if using the $\overline{\text{RESET}}$ pin as a method of setting the value of the mode pins, the effects of an emulator reset must be taken into consideration.

One method of ensuring that the values located on the mode pins are the desired values is to construct a circuit like the one shown in Figure 9. This circuit forces the value located on the Mode A pin to logic low, regardless if it latched via the $\overline{\text{RESET}}$ or $\overline{\text{ERESET}}$ pin.

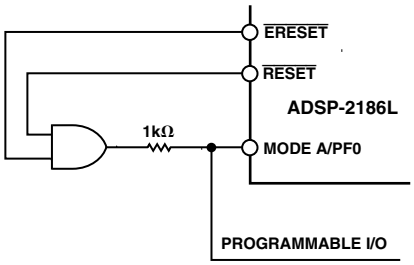

Figure 9. Boot Mode Circuit

See the *ADSP-2100 Family EZ-Tools* data sheet for complete information on ICE products.

The ICE-Port interface consists of the following ADSP-2186L pins:

$\overline{\text{EBR}}$	$\overline{\text{EBG}}$	$\overline{\text{ERESET}}$
$\overline{\text{EMS}}$	$\overline{\text{EINT}}$	ECLK
ELIN	ELOUT	EE

These ADSP-2186L pins are usually connected only to the EZ-ICE connector in the target system. These pins have no function except during emulation, and do not require pull-up or pull-down resistors. The traces for these signals between the ADSP-2186L and the connector must be kept as short as possible, no longer than three inches.

The following pins are also used by the EZ-ICE:

$\overline{\text{BR}}$	$\overline{\text{BG}}$
$\overline{\text{RESET}}$	GND

The EZ-ICE uses the EE (emulator enable) signal to take control of the ADSP-2186L in the target system. This causes the processor to use its $\overline{\text{ERESET}}$, $\overline{\text{EBR}}$ and $\overline{\text{EBG}}$ pins instead of the $\overline{\text{RESET}}$, $\overline{\text{BR}}$ and $\overline{\text{BG}}$ pins. The $\overline{\text{BG}}$ output is three-stated. These signals do not need to be jumper-isolated in your system.

The EZ-ICE connects to your target system via a ribbon cable and a 14-pin female plug. The female plug is plugged onto the 14-pin connector (a pin strip header) on the target board.

Target Board Connector for EZ-ICE Probe

The EZ-ICE connector (a standard pin strip header) is shown in Figure 10. You must add this connector to your target board design if you intend to use the EZ-ICE. Be sure to allow enough room in your system to fit the EZ-ICE probe onto the 14-pin connector.

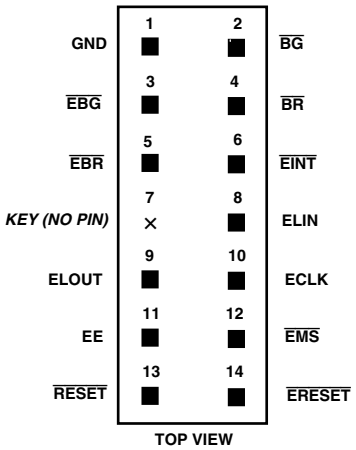

Figure 10. Target Board Connector for EZ-ICE

The 14-pin, 2-row pin strip header is keyed at the Pin 7 location—you must remove Pin 7 from the header. The pins must be 0.025 inch square and at least 0.20 inch in length. Pin spacing should be 0.1 × 0.1 inches. The pin strip header must have at least 0.15-inch clearance on all sides to accept the EZ-ICE probe plug. Pin strip headers are available from vendors such as 3M, McKenzie and Samtec.

Target Memory Interface
For your target system to be compatible with the EZ-ICE emulator, it must comply with the memory interface guidelines listed below.

PM, DM, BM, IOM, and CM
Design Program Memory (PM), Data Memory (DM), Byte Memory (BM), I/O Memory (IOM) and Composite Memory (CM) external interfaces to comply with worst case device timing requirements and switching characteristics as specified in this DSP's data sheet. The performance of the EZ-ICE may approach published worst case specification for some memory access timing requirements and switching characteristics.

Note: If your target does not meet the worst case chip specifications for memory access parameters, you may not be able to emulate your circuitry at the desired CLKIN frequency. Depending on the severity of the specification violation, you may have trouble manufacturing your system as DSP components statistically vary in switching characteristics and timing requirements within published limits.

Restriction: All memory strobe signals on the ADSP-2186L ($\overline{RD}$, $\overline{WR}$, $\overline{PMS}$, $\overline{DMS}$, $\overline{BMS}$, $\overline{CMS}$ and $\overline{IOMS}$) used in your target system must have 10 kΩ pull-up resistors connected when the EZ-ICE is being used. The pull-up resistors are necessary because there are no internal pull-ups to guarantee their state during prolonged three-state conditions resulting from typical EZ-ICE debugging sessions. These resistors may be removed at your option when the EZ-ICE is not being used.

Target System Interface Signals
When the EZ-ICE board is installed, the performance of some system signals change. Design your system to be compatible with the following system interface signal changes introduced by the EZ-ICE board:

- EZ-ICE emulation introduces an 8 ns propagation delay between your target circuitry and the DSP on the $\overline{RESET}$ signal.
- EZ-ICE emulation introduces an 8 ns propagation delay between your target circuitry and the DSP on the $\overline{BR}$ signal.
- EZ-ICE emulation ignores $\overline{RESET}$ and $\overline{BR}$ when single-stepping.
- EZ-ICE emulation ignores $\overline{RESET}$ and $\overline{BR}$ when in Emulator Space (DSP halted).
- EZ-ICE emulation ignores the state of target $\overline{BR}$ in certain modes. As a result, the target system may take control of the DSP's external memory bus only if bus grant ($\overline{BG}$) is asserted by the EZ-ICE board's DSP.

ADSP-2186L–SPECIFICATIONS

RECOMMENDED OPERATING CONDITIONS

Parameter	K Grade Min	K Grade Max	B Grade Min	B Grade Max	Unit
V_{DD}	3.0	3.6	3.0	3.6	V
T_{AMB}	0	+70	–40	+85	°C

ELECTRICAL CHARACTERISTICS

Parameter		Test Conditions	K/B Grades Min	Typ	Max	Unit
V_{IH}	Hi-Level Input Voltage[1, 2]	@ V_{DD} = max	2.0			V
V_{IH}	Hi-Level CLKIN Voltage	@ V_{DD} = max	2.2			V
V_{IL}	Lo-Level Input Voltage[1, 3]	@ V_{DD} = min			0.8	V
V_{OH}	Hi-Level Output Voltage[1, 4, 5]	@ V_{DD} = min I_{OH} = –0.5 mA	2.4			V
		@ V_{DD} = min I_{OH} = –100 µA[6]	V_{DD} – 0.3			V
V_{OL}	Lo-Level Output Voltage[1, 4, 5]	@ V_{DD} = min I_{OL} = 2 mA			0.4	V
I_{IH}	Hi-Level Input Current[3]	@ V_{DD} = max V_{IN} = V_{DD}max			10	µA
I_{IL}	Lo-Level Input Current[3]	@ V_{DD} = max V_{IN} = 0 V			10	µA
I_{OZH}	Three-State Leakage Current[7]	@ V_{DD} = max V_{IN} = V_{DD}max[8]			10	µA
I_{OZL}	Three-State Leakage Current[7]	@ V_{DD} = max V_{IN} = 0 V[8]			10	µA
I_{DD}	Supply Current (Idle)[9]	@ V_{DD} = 3.3		8.6		mA
I_{DD}	Supply Current (Dynamic)[10]	@ V_{DD} = 3.3 T_{AMB} = 25°C t_{CK} = 25 ns[11]		42		mA
C_I	Input Pin Capacitance[3, 6]	@ V_{IN} = 2.5 V, f_{IN} = 1.0 MHz, T_{AMB} = 25°C			8	pF
C_O	Output Pin Capacitance[6, 7, 12]	@ V_{IN} = 2.5 V, f_{IN} = 1.0 MHz, T_{AMB} = 25°C			8	pF

NOTES

[1]Bidirectional pins: D0–D23, RFS0, RFS1, SCLK0, SCLK1, TFS0, TFS1, A1–A13, PF0–PF7.

[2]Input only pins: $\overline{\text{RESET}}$, $\overline{\text{BR}}$, DR0, DR1, $\overline{\text{PWD}}$.

[3]Input only pins: CLKIN, $\overline{\text{RESET}}$, $\overline{\text{BR}}$, DR0, DR1, $\overline{\text{PWD}}$.

[4]Output pins: $\overline{\text{BG}}$, $\overline{\text{PMS}}$, $\overline{\text{DMS}}$, $\overline{\text{BMS}}$, $\overline{\text{IOMS}}$, $\overline{\text{CMS}}$, $\overline{\text{RD}}$, $\overline{\text{WR}}$, PWDACK, A0, DT0, DT1, CLKOUT, FL2–0, $\overline{\text{BGH}}$.

[5]Although specified for TTL outputs, all ADSP-2186L outputs are CMOS-compatible and will drive to V_{DD} and GND, assuming no dc loads.

[6]Guaranteed but not tested.

[7]Three-statable pins: A0–A13, D0–D23, $\overline{\text{PMS}}$, $\overline{\text{DMS}}$, $\overline{\text{BMS}}$, $\overline{\text{IOMS}}$, $\overline{\text{CMS}}$, $\overline{\text{RD}}$, $\overline{\text{WR}}$, DT0, DT1, SCLK0, SCLK1, TFS0, TFS1, RFS0, RFS1, PF0–PF7.

[8]0 V on $\overline{\text{BR}}$, CLKIN Inactive.

[9]Idle refers to ADSP-2186L state of operation during execution of IDLE instruction. Deasserted pins are driven to either V_{DD} or GND.

[10]I_{DD} measurement taken with all instructions executing from internal memory. 50% of the instructions are multifunction (types 1, 4, 5, 12, 13, 14), 30% are type 2 and type 6, and 20% are idle instructions.

[11]V_{IN} = 0 V and 3 V. For typical figures for supply currents, refer to Power Dissipation section.

[12]Output pin capacitance is the capacitive load for any three-stated output pin.

Specifications subject to change without notice.

ABSOLUTE MAXIMUM RATINGS*

Supply Voltage . . . . . –0.3 V to +4.6 V
Input Voltage . . . . . –0.5 V to V_{DD} + 0.5 V
Output Voltage Swing . . . . . –0.5 V to V_{DD} + 0.5 V
Operating Temperature Range (Ambient) . . –40°C to +85°C
Storage Temperature Range . . . . . –65°C to +150°C
Lead Temperature (5 sec) LQFP . . . . . 280°C

*Stresses above those listed under Absolute Maximum Ratings may cause permanent damage to the device. These are stress ratings only; functional operation of the device at these or any other conditions above those indicated in the operational sections of this specification is not implied. Exposure to absolute maximum rating conditions for extended periods may affect device reliability.

ESD SENSITIVITY

ESD (electrostatic discharge) sensitive device. Electrostatic charges as high as 4000 V readily accumulate on the human body and test equipment and can discharge without detection. Although the ADSP-2186L features proprietary ESD protection circuitry, permanent damage may occur on devices subjected to high energy electrostatic discharges. Therefore, proper ESD precautions are recommended to avoid performance degradation or loss of functionality.



TIMING PARAMETERS

GENERAL NOTES

Use the exact timing information given. Do not attempt to derive parameters from the addition or subtraction of others. While addition or subtraction would yield meaningful results for an individual device, the values given in this data sheet reflect statistical variations and worst cases. Consequently, you cannot meaningfully add up parameters to derive longer times.

TIMING NOTES

Switching characteristics specify how the processor changes its signals. You have no control over this timing—circuitry external to the processor must be designed for compatibility with these signal characteristics. Switching characteristics tell you what the processor will do in a given circumstance. You can also use switching characteristics to ensure that any timing requirement of a device connected to the processor (such as memory) is satisfied.

Timing requirements apply to signals that are controlled by circuitry external to the processor, such as the data input for a read operation. Timing requirements must be met to guarantee that the processor operates correctly with other devices.

MEMORY TIMING SPECIFICATIONS

The table below shows common memory device specifications and the corresponding ADSP-2186L timing parameters, for your convenience.

Memory Device Specification	ADSP-2186L Timing Parameter	Timing Parameter Definition
Address Setup to Write Start	t_{ASW}	A0–A13, $\overline{xMS}$ Setup before $\overline{WR}$ Low
Address Setup to Write End	t_{AW}	A0–A13, $\overline{xMS}$ Setup before $\overline{WR}$ Deasserted
Address Hold Time	t_{WRA}	A0–A13, $\overline{xMS}$ Hold before $\overline{WR}$ Low
Data Setup Time	t_{DW}	Data Setup before $\overline{WR}$ High
Data Hold Time	t_{DH}	Data Hold after $\overline{WR}$ High
$\overline{OE}$ to Data Valid	t_{RDD}	$\overline{RD}$ Low to Data Valid
Address Access Time	t_{AA}	A0–A13, $\overline{xMS}$ to Data Valid

$\overline{xMS}$ = $\overline{PMS}$, $\overline{DMS}$, $\overline{BMS}$, $\overline{CMS}$, $\overline{IOMS}$.

FREQUENCY DEPENDENCY FOR TIMING SPECIFICATIONS

t_{CK} is defined as 0.5 t_{CKI}. The ADSP-2186L uses an input clock with a frequency equal to half the instruction rate. For example, a 20 MHz input clock (which is equivalent to 50 ns) yields a 25 ns processor cycle (equivalent to 40 MHz). t_{CK} values within the range of 0.5 t_{CKI} period should be substituted for all relevant timing parameters to obtain the specification value.

Example: t_{CKH} = 0.5 t_{CK} – 7 ns = 0.5 (25 ns) – 7 ns = 5.5 ns

TIMING PARAMETERS

Parameter		Min	Max	Unit
Clock Signals and Reset				
Timing Requirements:				
t_{CKI}	CLKIN Period	50	150	ns
t_{CKIL}	CLKIN Width Low	20		ns
t_{CKIH}	CLKIN Width High	20		ns
Switching Characteristics:				
t_{CKL}	CLKOUT Width Low	0.5 t_{CK} – 7		ns
t_{CKH}	CLKOUT Width High	0.5 t_{CK} – 7		ns
t_{CKOH}	CLKIN High to CLKOUT High	0	20	ns
Control Signals				
Timing Requirements:				
t_{RSP}	$\overline{\text{RESET}}$ Width Low[1]	5 t_{CK}		ns
t_{MS}	Mode Setup before $\overline{\text{RESET}}$ High	2		ns
t_{MH}	Mode Setup after $\overline{\text{RESET}}$ High	5		ns

NOTE
[1]Applies after power-up sequence is complete. Internal phase lock loop requires no more than 2000 CLKIN cycles assuming stable CLKIN (not including crystal oscillator start-up time).

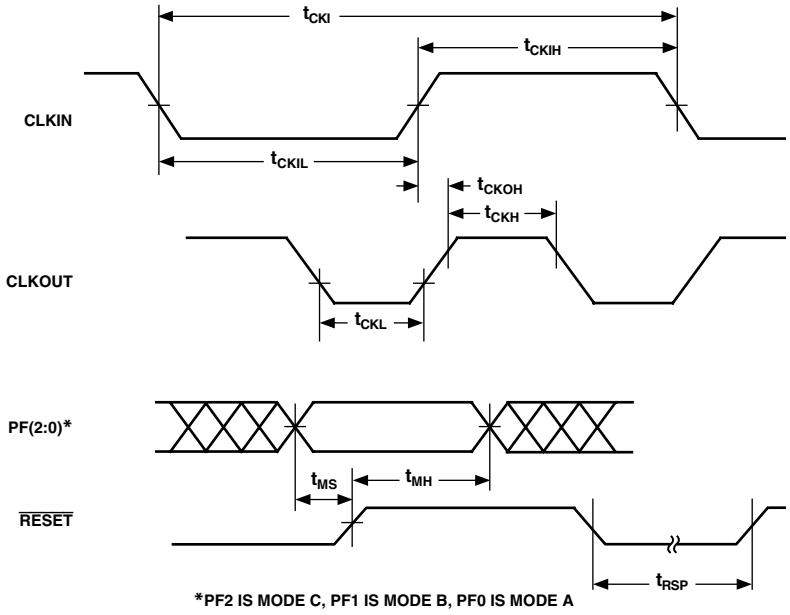

Figure 11. Clock Signals

TIMING PARAMETERS

Parameter		Min	Max	Unit
Interrupts and Flag				
Timing Requirements:				
t_{IFS}	$\overline{IRQx}$, FI, or PFx Setup before CLKOUT Low[1, 2, 3, 4]	0.25 t_{CK} + 15		ns
t_{IFH}	$\overline{IRQx}$, FI, or PFx Hold after CLKOUT High[1, 2, 3, 4]	0.25 t_{CK}		ns
Switching Characteristics:				
t_{FOH}	Flag Output Hold after CLKOUT Low[5]	0.25 t_{CK} – 7		ns
t_{FOD}	Flag Output Delay from CLKOUT Low[5]		0.5 t_{CK} + 6	ns

NOTES
[1]If $\overline{IRQx}$ and FI inputs meet t_{IFS} and t_{IFH} setup/hold requirements, they will be recognized during the current clock cycle; otherwise the signals will be recognized on the following cycle. (Refer to "Interrupt Controller Operation" in the Program Control chapter of the *ADSP-218x DSP Hardware Reference*, for further information on interrupt servicing.)
[2]Edge-sensitive interrupts require pulsewidths greater than 10 ns; level-sensitive interrupts must be held low until serviced.
[3]$\overline{IRQx}$ = $\overline{IRQ0}$, $\overline{IRQ1}$, $\overline{IRQ2}$, $\overline{IRQL0}$, $\overline{IRQL1}$, $\overline{IRQE}$.
[4]PFx = PF0, PF1, PF2, PF3, PF4, PF5, PF6, PF7.
[5]Flag outputs = PFx, FL0, FL1, FL2, FO.

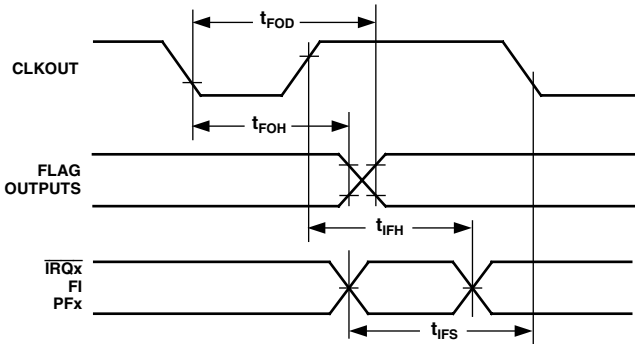

Figure 12. Interrupts and Flags

Parameter		Min	Max	Unit
Bus Request–Bus Grant				
Timing Requirements:				
t_{BH}	$\overline{BR}$ Hold after CLKOUT High[1]	0.25 t_{CK} + 2		ns
t_{BS}	$\overline{BR}$ Setup before CLKOUT Low[1]	0.25 t_{CK} + 17		ns
Switching Characteristics:				
t_{SD}	CLKOUT High to $\overline{xMS}$, $\overline{RD}$, $\overline{WR}$ Disable		0.25 t_{CK} + 10	ns
t_{SDB}	$\overline{xMS}$, $\overline{RD}$, $\overline{WR}$ Disable to $\overline{BG}$ Low	0		ns
t_{SE}	$\overline{BG}$ High to $\overline{xMS}$, $\overline{RD}$, $\overline{WR}$ Enable	0		ns
t_{SEC}	$\overline{xMS}$, $\overline{RD}$, $\overline{WR}$ Enable to CLKOUT High	0.25 t_{CK} – 7		ns
t_{SDBH}	$\overline{xMS}$, $\overline{RD}$, $\overline{WR}$ Disable to $\overline{BGH}$ Low[2]	0		ns
t_{SEH}	$\overline{BGH}$ High to $\overline{xMS}$, $\overline{RD}$, $\overline{WR}$ Enable[2]	0		ns

NOTES
$\overline{xMS}$ = $\overline{PMS}$, $\overline{DMS}$, $\overline{CMS}$, $\overline{IOMS}$, $\overline{BMS}$.
[1]$\overline{BR}$ is an asynchronous signal. If $\overline{BR}$ meets the setup/hold requirements, it will be recognized during the current clock cycle; otherwise the signal will be recognized on the following cycle. Refer to the *ADSP-218x DSP Hardware Reference*, for $\overline{BR}$/$\overline{BG}$ cycle relationships.
[2]$\overline{BGH}$ is asserted when the bus is granted and the processor requires control of the bus to continue.

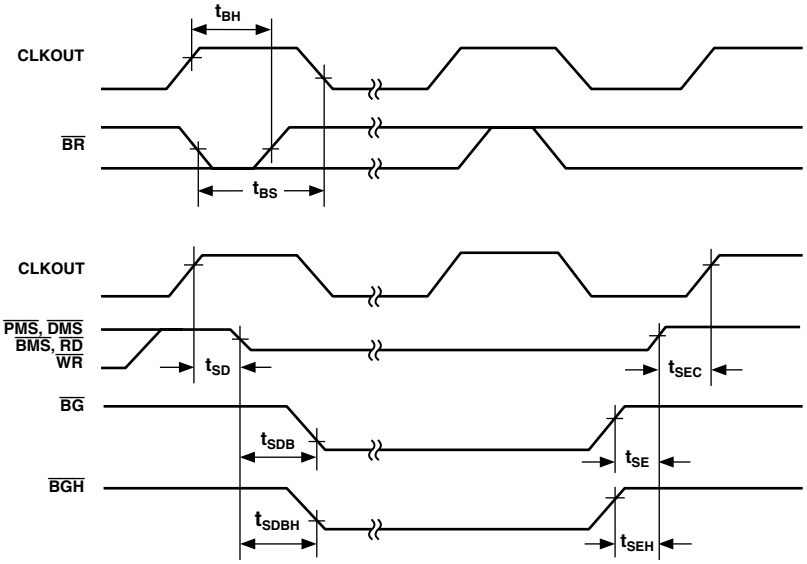

Figure 13. Bus Request–Bus Grant

TIMING PARAMETERS

Parameter		Min	Max	Unit
Memory Read				
Timing Requirements:				
t_{RDD}	$\overline{RD}$ Low to Data Valid		0.5 t_{CK} – 9 + w	ns
t_{AA}	A0–A13, $\overline{xMS}$ to Data Valid		0.75 t_{CK} – 12.5 + w	ns
t_{RDH}	Data Hold from $\overline{RD}$ High	1		ns
Switching Characteristics:				
t_{RP}	$\overline{RD}$ Pulsewidth	0.5 t_{CK} – 5 + w		ns
t_{CRD}	CLKOUT High to $\overline{RD}$ Low	0.25 t_{CK} – 5	0.25 t_{CK} + 7	ns
t_{ASR}	A0–A13, $\overline{xMS}$ Setup before $\overline{RD}$ Low	0.25 t_{CK} – 6		ns
t_{RDA}	A0–A13, $\overline{xMS}$ Hold after $\overline{RD}$ Deasserted	0.25 t_{CK} – 3		ns
t_{RWR}	$\overline{RD}$ High to $\overline{RD}$ or $\overline{WR}$ Low	0.5 t_{CK} – 5		ns

w = wait states × t_{CK}.
$\overline{xMS}$ = $\overline{PMS}$, $\overline{DMS}$, $\overline{CMS}$, $\overline{IOMS}$, $\overline{BMS}$.

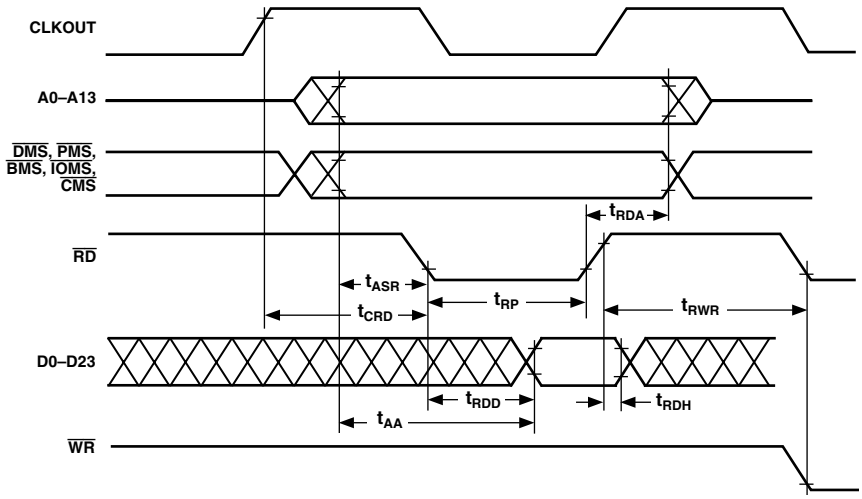

Figure 14. Memory Read

Parameter		Min	Max	Unit
Memory Write				
Switching Characteristics:				
t_{DW}	Data Setup before $\overline{WR}$ High	0.5 t_{CK} – 7+ w		ns
t_{DH}	Data Hold after $\overline{WR}$ High	0.25 t_{CK} – 2		ns
t_{WP}	$\overline{WR}$ Pulsewidth	0.5 t_{CK} – 5 + w		ns
t_{WDE}	$\overline{WR}$ Low to Data Enabled	0		ns
t_{ASW}	A0–A13, $\overline{xMS}$ Setup before $\overline{WR}$ Low	0.25 t_{CK} – 6		ns
t_{DDR}	Data Disable before $\overline{WR}$ or $\overline{RD}$ Low	0.25 t_{CK} – 7		ns
t_{CWR}	CLKOUT High to $\overline{WR}$ Low	0.25 t_{CK} – 5	0.25 t_{CK} + 7	ns
t_{AW}	A0–A13, $\overline{xMS}$, Setup before $\overline{WR}$ Deasserted	0.75 t_{CK} – 9 + w		ns
t_{WRA}	A0–A13, $\overline{xMS}$ Hold after $\overline{WR}$ Deasserted	0.25 t_{CK} – 3		ns
t_{WWR}	$\overline{WR}$ High to $\overline{RD}$ or $\overline{WR}$ Low	0.5 t_{CK} – 5		ns

w = wait states × t_{CK}.
$\overline{xMS}$ = $\overline{PMS}$, $\overline{DMS}$, $\overline{CMS}$, $\overline{IOMS}$, $\overline{BMS}$.

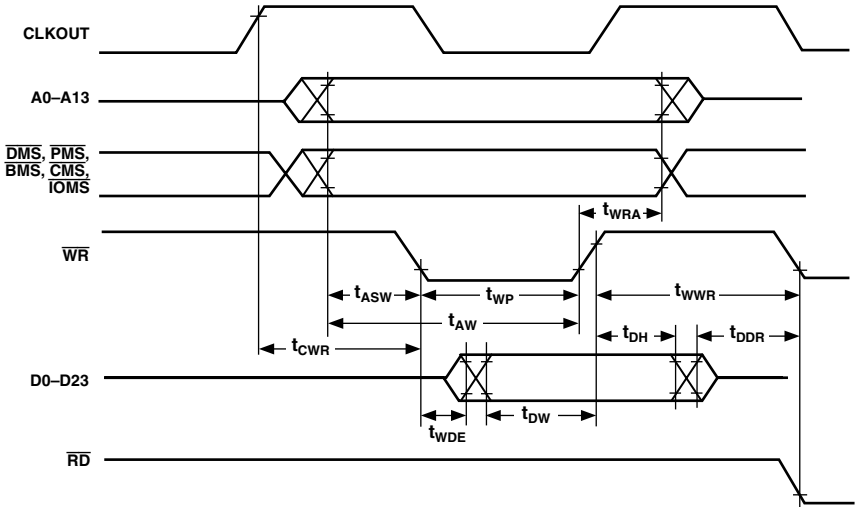

Figure 15. Memory Write

TIMING PARAMETERS

Parameter		Min	Max	Unit
Serial Ports				
Timing Requirements:				
t_{SCK}	SCLK Period	50		ns
t_{SCS}	DR/TFS/RFS Setup before SCLK Low	4		ns
t_{SCH}	DR/TFS/RFS Hold after SCLK Low	8		ns
t_{SCP}	$SCLK_{IN}$ Width	20		ns
Switching Characteristics:				
t_{CC}	CLKOUT High to $SCLK_{OUT}$	0.25 t_{CK}	0.25 t_{CK} + 10	ns
t_{SCDE}	SCLK High to DT Enable	0		ns
t_{SCDV}	SCLK High to DT Valid		15	ns
t_{RH}	TFS/RFS_{OUT} Hold after SCLK High	0		ns
t_{RD}	TFS/RFS_{OUT} Delay from SCLK High		15	ns
t_{SCDH}	DT Hold after SCLK High	0		ns
t_{TDE}	TFS (Alt) to DT Enable	0		ns
t_{TDV}	TFS (Alt) to DT Valid		14	ns
t_{SCDD}	SCLK High to DT Disable		15	ns
t_{RDV}	RFS (Multichannel, Frame Delay Zero) to DT Valid		15	ns

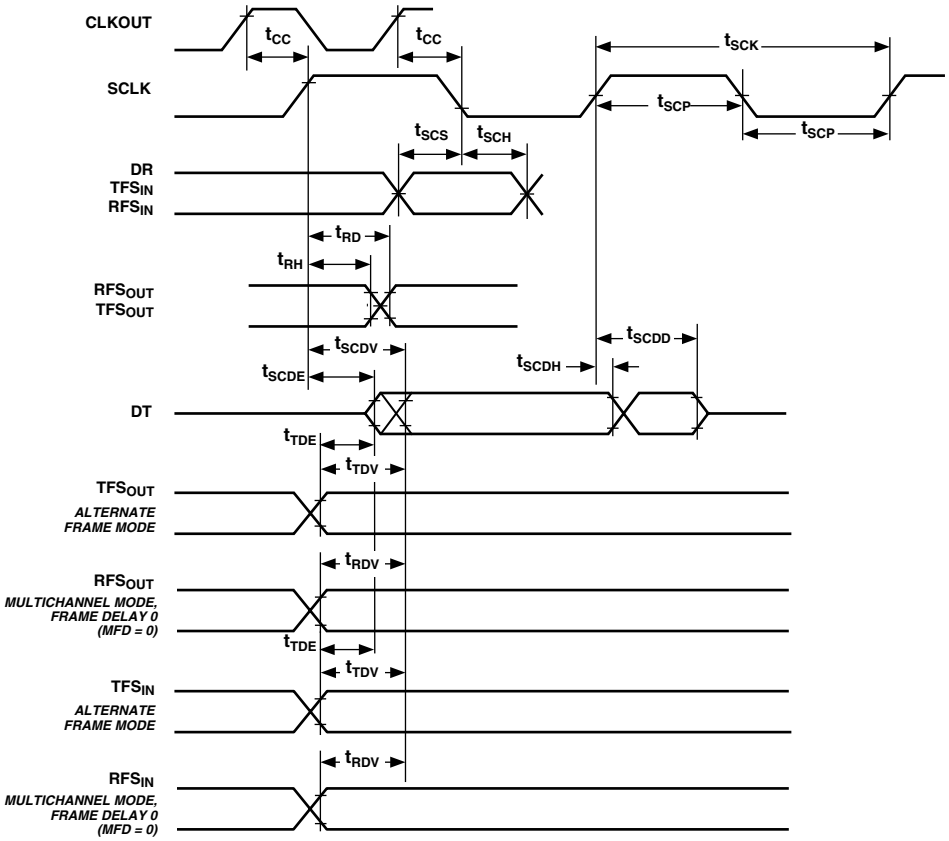

Figure 16. Serial Ports

Parameter		Min	Max	Unit
IDMA Address Latch				
Timing Requirements:				
t_{IALP}	Duration of Address Latch[1, 3]	10		ns
t_{IASU}	IAD15–0 Address Setup before Address Latch End[3]	5		ns
t_{IAH}	IAD15–0 Address Hold after Address Latch End[3]	3		ns
t_{IKA}	$\overline{IACK}$ Low before Start of Address Latch[2, 3]	0		ns
t_{IALS}	Start of Write or Read after Address Latch End[2, 3]	3		ns

NOTES
[1]Start of Address Latch = $\overline{IS}$ Low and IAL High.
[2]Start of Write or Read = $\overline{IS}$ Low and $\overline{IWR}$ Low or $\overline{IRD}$ Low.
[3]End of Address Latch = $\overline{IS}$ High or IAL Low.

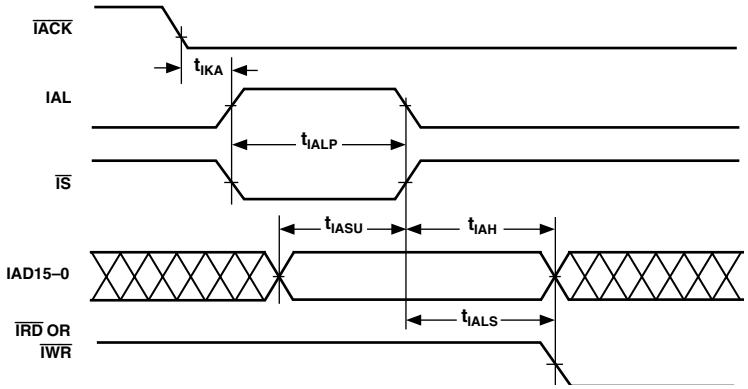

Figure 17. IDMA Address Latch

TIMING PARAMETERS

Parameter		Min	Max	Unit
IDMA Write, Short Write Cycle				
Timing Requirements:				
t_{IKW}	$\overline{IACK}$ Low before Start of Write[1]	0		ns
t_{IWP}	Duration of Write[1, 2]	15		ns
t_{IDSU}	IAD15–0 Data Setup before End of Write[2, 3, 4]	5		ns
t_{IDH}	IAD15–0 Data Hold after End of Write[2, 3, 4]	2		ns
Switching Characteristics:				
t_{IKHW}	Start of Write to $\overline{IACK}$ High		17	ns

NOTES
[1]Start of Write = $\overline{IS}$ Low and $\overline{IWR}$ Low.
[2]End of Write = $\overline{IS}$ High or $\overline{IWR}$ High.
[3]If Write Pulse ends before $\overline{IACK}$ Low, use specifications t_{IDSU}, t_{IDH}.
[4]If Write Pulse ends after $\overline{IACK}$ Low, use specifications t_{IKSU}, t_{IKH}.

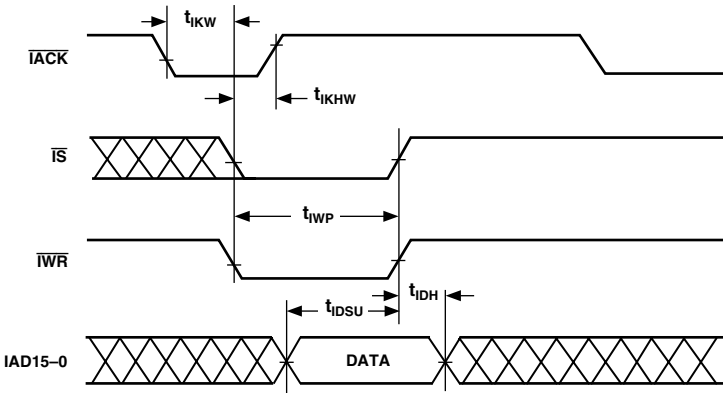

Figure 18. IDMA Write, Short Write Cycle

Parameter		Min	Max	Unit
IDMA Write, Long Write Cycle				
Timing Requirements:				
t_{IKW}	$\overline{IACK}$ Low before Start of Write[1]	0		ns
t_{IKSU}	IAD15–0 Data Setup before $\overline{IACK}$ Low[2, 3, 4]	0.5 t_{CK} + 10		ns
t_{IKH}	IAD15–0 Data Hold after $\overline{IACK}$ Low[2, 3, 4]	2		ns
Switching Characteristics:				
t_{IKLW}	Start of Write to $\overline{IACK}$ Low[4]	1.5 t_{CK}		ns
t_{IKHW}	Start of Write to $\overline{IACK}$ High		17	ns

NOTES
[1]Start of Write = $\overline{IS}$ Low and $\overline{IWR}$ Low.
[2]If Write Pulse ends before $\overline{IACK}$ Low, use specifications t_{IDSU}, t_{IDH}.
[3]If Write Pulse ends after $\overline{IACK}$ Low, use specifications t_{IKSU}, t_{IKH}.
[4]This is the earliest time for $\overline{IACK}$ Low from Start of Write. For IDMA Write cycle relationships, please refer to the *ADSP-218x DSP Hardware Reference*.

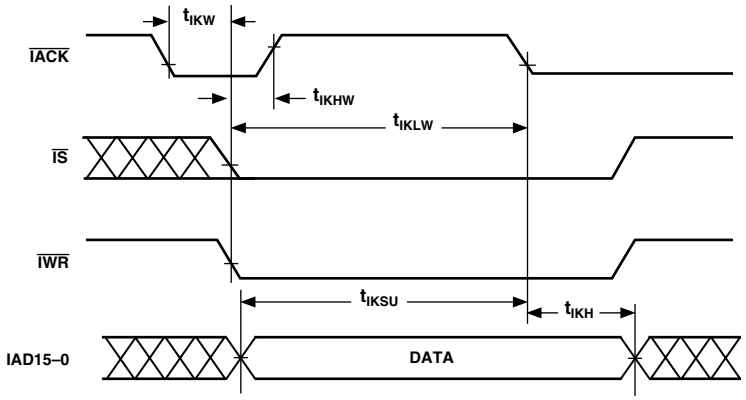

Figure 19. IDMA Write, Long Write Cycle

TIMING PARAMETERS

Parameter		Min	Max	Unit
IDMA Read, Long Read Cycle				
Timing Requirements:				
t_{IKR}	$\overline{IACK}$ Low before Start of Read[1]	0		ns
t_{IRK}	End of Read after $\overline{IACK}$ Low	2		ns
Switching Characteristics:				
t_{IKHR}	$\overline{IACK}$ High after Start of Read[1]		17	ns
t_{IKDS}	IAD15–0 Data Setup before $\overline{IACK}$ Low	0.5 t_{CK} – 10		ns
t_{IKDH}	IAD15–0 Data Hold after End of Read[2]	0		ns
t_{IKDD}	IAD15–0 Data Disabled after End of Read[2]		10	ns
t_{IRDE}	IAD15–0 Previous Data Enabled after Start of Read	0		ns
t_{IRDV}	IAD15–0 Previous Data Valid after Start of Read		15	ns
t_{IRDH1}	IAD15–0 Previous Data Hold after Start of Read (DM/PM1)[3]	2 t_{CK} – 5		ns
t_{IRDH2}	IAD15–0 Previous Data Hold after Start of Read (PM2)[4]	t_{CK} – 5		ns

NOTES
[1]Start of Read = $\overline{IS}$ Low and $\overline{IRD}$ Low.
[2]End of Read = $\overline{IS}$ High or $\overline{IRD}$ High.
[3]DM read or first half of PM read.
[4]Second half of PM read.

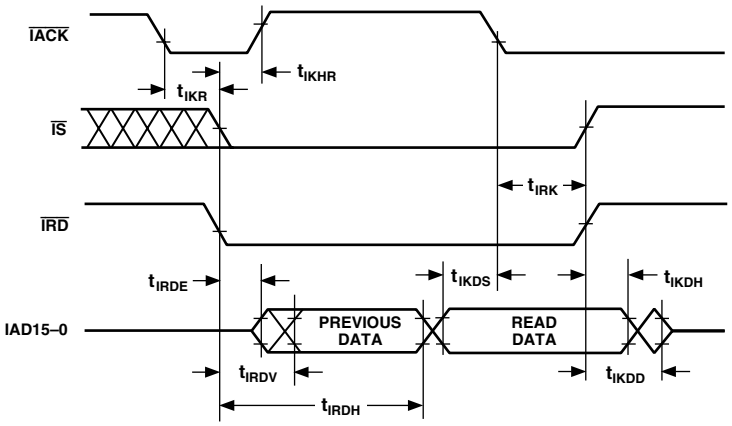

Figure 20. IDMA Read, Long Read Cycle

Parameter		Min	Max	Unit
IDMA Read, Short Read Cycle				
Timing Requirements:				
t_{IKR}	$\overline{IACK}$ Low before Start of Read[1]	0		ns
t_{IRP1}	Duration of Read (DM/PM1)[2]	15	$2t_{CK} - 5$	ns
t_{IRP2}	Duration of Read (PM2)[3]	15	$t_{CK} - 5$	ns
Switching Characteristics:				
t_{IKHR}	$\overline{IACK}$ High after Start of Read[1]		15	ns
t_{IKDH}	IAD15–0 Data Hold after End of Read[4]	0		ns
t_{IKDD}	IAD15–0 Data Disabled after End of Read[4]		10	ns
t_{IRDE}	IAD15–0 Previous Data Enabled after Start of Read	0		ns
t_{IRDV}	IAD15–0 Previous Data Valid after Start of Read		15	ns

NOTES
[1]Start of Read = $\overline{IS}$ Low and $\overline{IRD}$ Low.
[2]DM Read or First Half of PM Read.
[3]Second Half of PM Read.
[4]End of Read = $\overline{IS}$ High or $\overline{IRD}$ High.

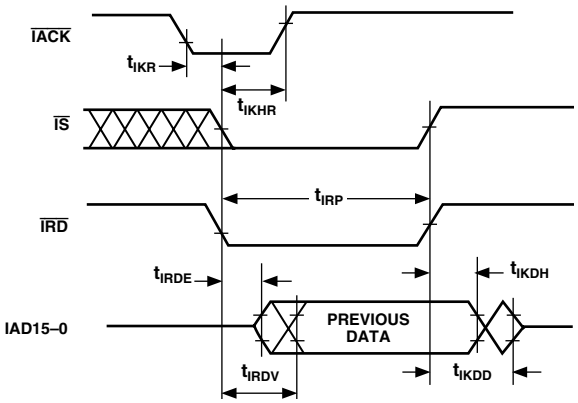

Figure 21. IDMA Read, Short Read Cycle

POWER DISSIPATION

To determine total power dissipation in a specific application, the following equation should be applied for each output:

$$C \times V_{DD}^2 \times f$$

C = load capacitance, f = output switching frequency.

Example

In an application where external data memory is used and no other outputs are active, power dissipation is calculated as follows:

Assumptions

- External data memory is accessed every cycle with 50% of the address pins switching.
- External data memory writes occur every other cycle with 50% of the data pins switching.
- Each address and data pin has a 10 pF total load at the pin.
- The application operates at V_{DD} = 3.3 V and t_{CK} = 30 ns.

Total Power Dissipation = P_{INT} + $(C \times V_{DD}^2 \times f)$

P_{INT} = internal power dissipation from Power vs. Frequency graph (Figure 23).

$(C \times V_{DD}^2 \times f)$ is calculated for each output:

	# of Pins	× C	× V_{DD}^2	× f	
Address	7	× 10 pF	× 3.3^2 V	× 16.67 MHz	= 12.7 mW
Data Output, $\overline{WR}$	9	× 10 pF	× 3.3^2 V	× 16.67 MHz	= 16.3 mW
$\overline{RD}$	1	× 10 pF	× 3.3^2 V	× 16.67 MHz	= 1.8 mW
CLKOUT, $\overline{DMS}$	2	× 10 pF	× 3.3^2 V	× 33.3 MHz	= 7.2 mW
					38.0 mW

Total power dissipation for this example is PINT + 38.0 mW.

Output Drive Currents

Figure 22 shows typical I-V characteristics for the output drivers of the ADSP-2186L. The curves represent the current drive capability of the output drivers as a function of output voltage.

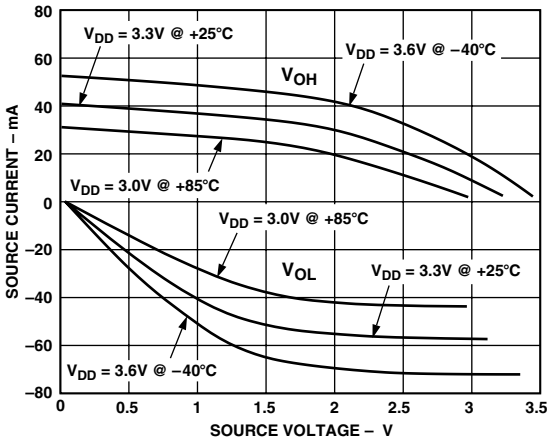

Figure 22. Typical Output Driver Characteristics

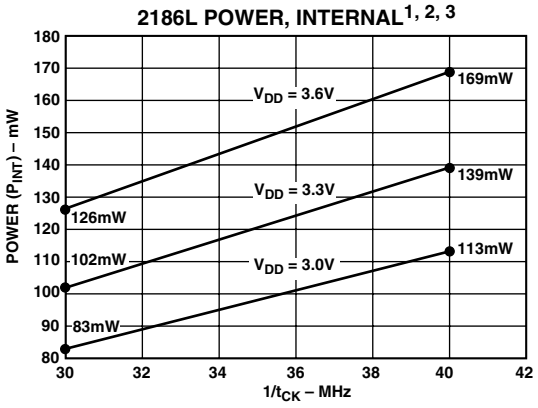

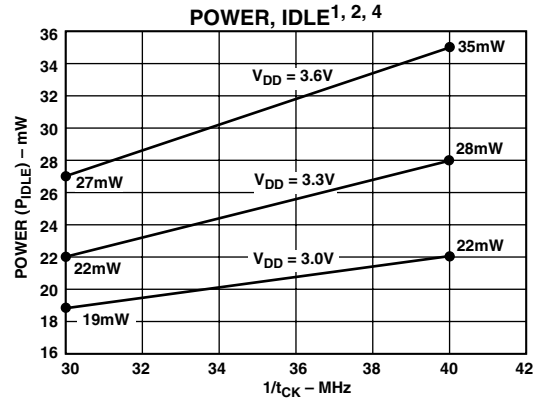

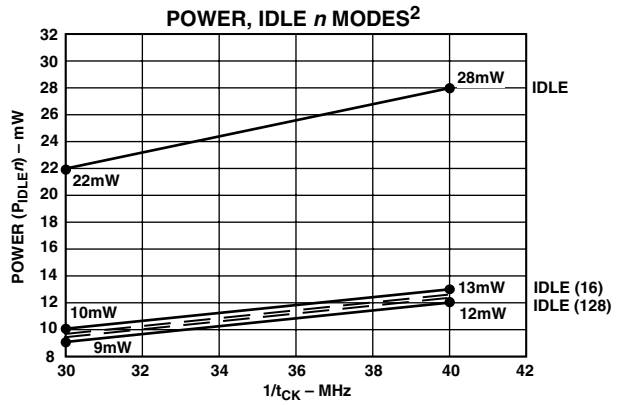

VALID FOR ALL TEMPERATURE GRADES.

[1] POWER REFLECTS DEVICE OPERATING WITH NO OUTPUT LOADS.

[2] TYPICAL POWER DISSIPATION AT 3.3V V_{DD} AND T_A = 25°C EXCEPT WHERE SPECIFIED.

[3] I_{DD} MEASUREMENT TAKEN WITH ALL INSTRUCTIONS EXECUTING FROM INTERNAL MEMORY. 50% OF THE INSTRUCTIONS ARE MULTIFUNCTION (TYPES 1, 4, 5, 12, 13, 14), 30% ARE TYPE 2 AND TYPE 6, AND 20% ARE IDLE INSTRUCTIONS.

[4] IDLE REFERS TO ADSP-2186L STATE OF OPERATION DURING EXECUTION OF IDLE INSTRUCTION. DEASSERTED PINS ARE DRIVEN TO EITHER V_{DD}. OR GND.

Figure 23. Power vs. Frequency

CAPACITIVE LOADING

Figures 24 and 25 show the capacitive loading characteristics of the ADSP-2186L.

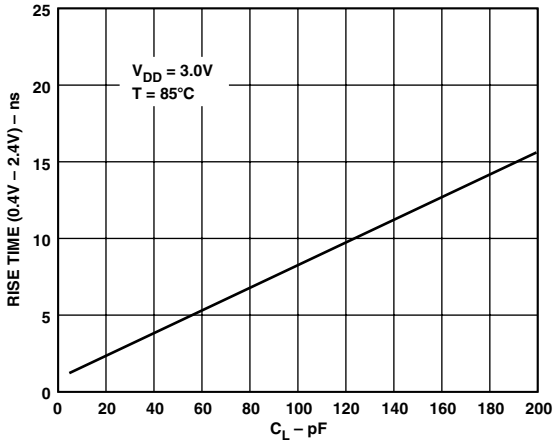

Figure 24. Typical Output Rise Time vs. Load Capacitance, C_L (at Maximum Ambient Operating Temperature)

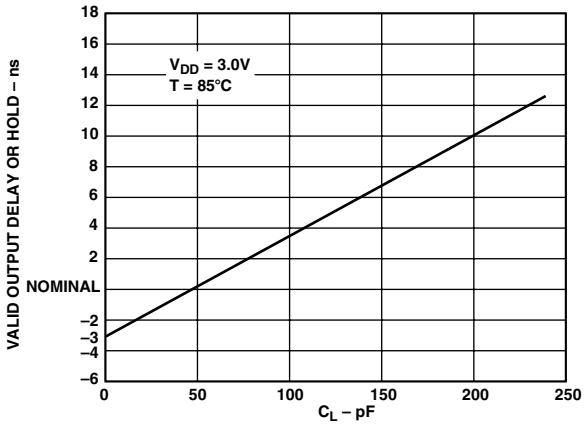

Figure 25. Typical Output Valid Delay or Hold vs. Load Capacitance, C_L (at Maximum Ambient Operating Temperature)

TEST CONDITIONS

Output Disable Time

Output pins are considered to be disabled when they have stopped driving and started a transition from the measured output high or low voltage to a high impedance state. The output disable time (t_{DIS}) is the difference between $t_{MEASURED}$ and t_{DECAY}, as shown in the Output Enable/Disable diagram. The time is the interval from when a reference signal reaches a high or low voltage level to when the output voltages have changed by 0.5 V from the measured output high or low voltage. The decay time, t_{DECAY}, is dependent on the capacitive load, C_L, and the current load, i_L, on the output pin. It can be approximated by the following equation:

$$t_{DECAY} = \frac{C_L \times 0.5\,V}{i_L}$$

from which

$$t_{DIS} = t_{MEASURED} - t_{DECAY}$$

is calculated. If multiple pins (such as the data bus) are disabled, the measurement value is that of the last pin to stop driving.



Figure 26. Voltage Reference Levels for AC Measurements (Except Output Enable/Disable)

Output Enable Time

Output pins are considered to be enabled when they have made a transition from a high-impedance state to when they start driving. The output enable time (t_{ENA}) is the interval from when a reference signal reaches a high or low voltage level to when the output has reached a specified high or low trip point, as shown in the Output Enable/Disable diagram. If multiple pins (such as the data bus) are enabled, the measurement value is that of the first pin to start driving.

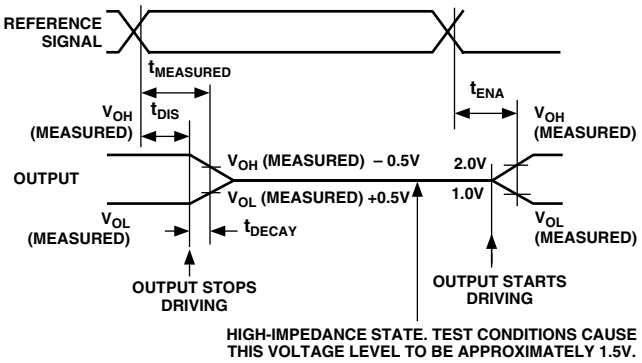

Figure 27. Output Enable/Disable

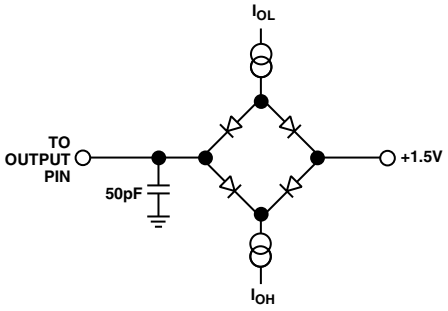

Figure 28. Equivalent Device Loading for AC Measurements (Including All Fixtures)

ENVIRONMENTAL CONDITIONS

Ambient Temperature Rating:

T_{AMB} = $T_{CASE} - (PD \times \theta_{CA})$
T_{CASE} = Case Temperature in °C
PD = Power Dissipation in W
θ_{CA} = Thermal Resistance (Case-to-Ambient)
θ_{JA} = Thermal Resistance (Junction-to-Ambient)
θ_{JC} = Thermal Resistance (Junction-to-Case)

Package	θ_{JA}	θ_{JC}	θ_{CA}
LQFP	50°C/W	2°C/W	48°C/W
Mini-BGA	70.7°C/W	7.4°C/W	63.3°C/W

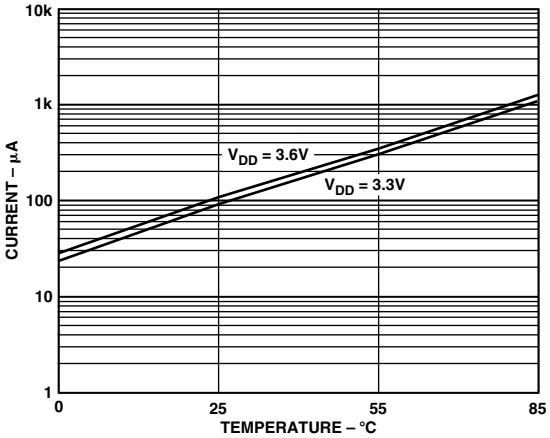

Figure 29. Power-Down Graph

100-Lead LQFP Package Pinout

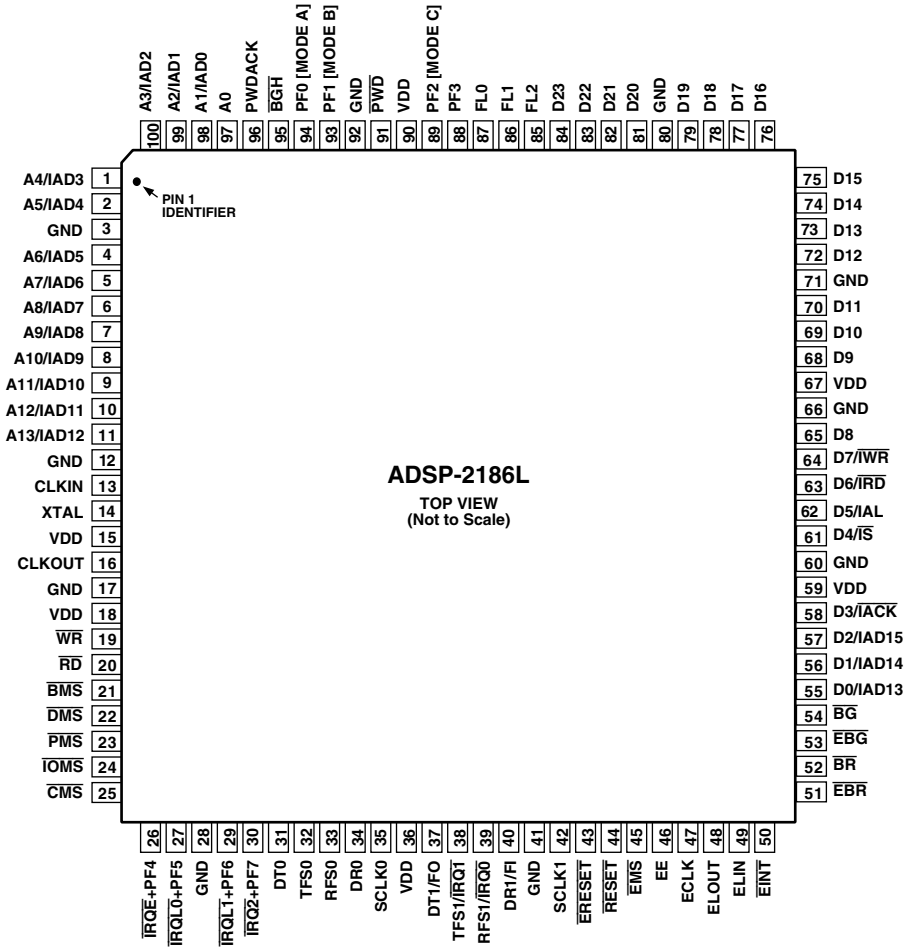

The ADSP-2186L package pinout is shown in the table below. Pin names in bold text replace the plain text named functions when Mode C = 1. A + sign separates two functions when either function can be active for either major I/O mode. Signals enclosed in brackets [ ] are state bits latched from the value of the pin at the deassertion of $\overline{\text{RESET}}$.

LQFP Pin Configurations

LQFP Number	Pin Name	LQFP Number	Pin Name	LQFP Number	Pin Name	LQFP Number	Pin Name
1	A4/**IAD3**	26	$\overline{\text{IRQE}}$ + PF4	51	$\overline{\text{EBR}}$	76	D16
2	A5/**IAD4**	27	$\overline{\text{IRQL0}}$ + PF5	52	$\overline{\text{BR}}$	77	D17
3	GND	28	GND	53	$\overline{\text{EBG}}$	78	D18
4	A6/**IAD5**	29	$\overline{\text{IRQL1}}$ + PF6	54	$\overline{\text{BG}}$	79	D19
5	A7/**IAD6**	30	$\overline{\text{IRQ2}}$ + PF7	55	D0/**IAD13**	80	GND
6	A8/**IAD7**	31	DT0	56	D1/**IAD14**	81	D20
7	A9/**IAD8**	32	TFS0	57	D2/**IAD15**	82	D21
8	A10/**IAD9**	33	RFS0	58	D3/$\overline{\textbf{IACK}}$	83	D22
9	A11/**IAD10**	34	DR0	59	VDD	84	D23
10	A12/**IAD11**	35	SCLK0	60	GND	85	FL2
11	A13/**IAD12**	36	VDD	61	D4/$\overline{\textbf{IS}}$	86	FL1
12	GND	37	DT1/FO	62	D5/**IAL**	87	FL0
13	CLKIN	38	TFS1/$\overline{\text{IRQ1}}$	63	D6/$\overline{\textbf{IRD}}$	88	PF3
14	XTAL	39	RFS1/$\overline{\text{IRQ0}}$	64	D7/$\overline{\textbf{IWR}}$	89	PF2 [Mode C]
15	VDD	40	DR1/FI	65	D8	90	VDD
16	CLKOUT	41	GND	66	GND	91	$\overline{\text{PWD}}$
17	GND	42	SCLK1	67	VDD	92	GND
18	VDD	43	$\overline{\text{ERESET}}$	68	D9	93	PF1 [Mode B]
19	$\overline{\text{WR}}$	44	$\overline{\text{RESET}}$	69	D10	94	PF0 [Mode A]
20	$\overline{\text{RD}}$	45	$\overline{\text{EMS}}$	70	D11	95	$\overline{\text{BGH}}$
21	$\overline{\text{BMS}}$	46	EE	71	GND	96	PWDACK
22	$\overline{\text{DMS}}$	47	ECLK	72	D12	97	A0
23	$\overline{\text{PMS}}$	48	ELOUT	73	D13	98	A1/**IAD0**
24	$\overline{\text{IOMS}}$	49	ELIN	74	D14	99	A2/**IAD1**
25	$\overline{\text{CMS}}$	50	$\overline{\text{EINT}}$	75	D15	100	A3/**IAD2**

ADSP-2186L Mini-BGA (CA) Package Pinout
Bottom View

12	11	10	9	8	7	6	5	4	3	2	1	
GND	GND	D22	NC	NC	NC	GND	NC	A0	GND	A1/IAD0	A2/IAD1	A
D16	D17	D18	D20	D23	VDD	GND	NC	NC	GND	A3/IAD2	A4/IAD3	B
D14	NC	D15	D19	D21	VDD	$\overline{\text{PWD}}$	A7/IAD6	A5/IAD4	$\overline{\text{RD}}$	A6/IAD5	PWDACK	C
GND	NC	D12	D13	NC	PF2 [MODE C]	PF1 [MODE B]	A9/IAD8	$\overline{\text{BGH}}$	NC	$\overline{\text{WR}}$	NC	D
D10	GND	VDD	GND	GND	PF3	FL2	PF0 [MODE A]	FL0	A8/IAD7	VDD	VDD	E
D9	NC	D8	D11	D7/$\overline{\text{IWR}}$	NC	NC	FL1	A11/ IAD10	A12/ IAD11	NC	A13/ IAD12	F
D4/$\overline{\text{IS}}$	NC	NC	D5/IAL	D6/$\overline{\text{IRD}}$	NC	NC	NC	A10/IAD9	GND	NC	XTAL	G
GND	NC	GND	D3/$\overline{\text{IACK}}$	D2/IAD15	TFS0	DT0	VDD	GND	GND	GND	CLKIN	H
VDD	VDD	D1/IAD14	$\overline{\text{BG}}$	RFS1/ $\overline{\text{IRQ0}}$	D0/IAD13	SCLK0	VDD	VDD	NC	VDD	CLKOUT	J
$\overline{\text{EBG}}$	$\overline{\text{BR}}$	$\overline{\text{EBR}}$	$\overline{\text{ERESET}}$	SCLK1	TFS1/ $\overline{\text{IRQ1}}$	RFS0	$\overline{\text{DMS}}$	$\overline{\text{BMS}}$	NC	NC	NC	K
$\overline{\text{EINT}}$	ELOUT	ELIN	$\overline{\text{RESET}}$	GND	DR0	$\overline{\text{PMS}}$	GND	$\overline{\text{IOMS}}$	$\overline{\text{IRQL1}}$ +PF6	NC	$\overline{\text{IRQE}}$ +PF4	L
ECLK	EE	$\overline{\text{EMS}}$	NC	GND	DR1/ FI	DT1/ FO	GND	$\overline{\text{CMS}}$	NC	$\overline{\text{IRQ2}}$ +PF7	$\overline{\text{IRQL0}}$ +PF5	M

The ADSP-2186L Mini-BGA package pinout is shown in the table below. Pin names in **bold** text replace the plain text named functions when Mode C = 1. A + sign separates two functions when either function can be active for either major I/O mode. Signals enclosed in brackets [ ] are state bits latched from the value of the pin at the deassertion of $\overline{\text{RESET}}$.

Mini-BGA Package Pinout

Ball #	Name	Ball #	Name	Ball #	Name	Ball #	Name
A01	A2/**IAD1**	D01	N/C	G01	XTAL	K01	N/C
A02	A1/**IAD0**	D02	$\overline{\text{WR}}$	G02	N/C	K02	N/C
A03	GND	D03	N/C	G03	GND	K03	N/C
A04	A0	D04	$\overline{\text{BGH}}$	G04	A10/**IAD9**	K04	$\overline{\text{BMS}}$
A05	N/C	D05	A9/**IAD8**	G05	N/C	K05	$\overline{\text{DMS}}$
A06	GND	D06	PF1[MODE B]	G06	N/C	K06	RFS0
A07	N/C	D07	PF2[MODE C]	G07	N/C	K07	TFS1/$\overline{\text{IRQ1}}$
A08	N/C	D08	N/C	G08	D6/$\overline{\textbf{IRD}}$	K08	SCLK1
A09	N/C	D09	D13	G09	D5/**IAL**	K09	$\overline{\text{ERESET}}$
A10	D22	D10	D12	G10	N/C	K10	$\overline{\text{EBR}}$
A11	GND	D11	N/C	G11	N/C	K11	$\overline{\text{BR}}$
A12	GND	D12	GND	G12	D4/$\overline{\textbf{IS}}$	K12	$\overline{\text{EBG}}$
B01	A4/**IAD3**	E01	VDD	H01	CLKIN	L01	$\overline{\text{IRQE}}$+PF4
B02	A3/**IAD2**	E02	VDD	H02	GND	L02	N/C
B03	GND	E03	A8/**IAD7**	H03	GND	L03	$\overline{\text{IRQL1}}$+PF6
B04	N/C	E04	FL0	H04	GND	L04	$\overline{\text{IOMS}}$
B05	N/C	E05	PF0[MODE A]	H05	VDD	L05	GND
B06	GND	E06	FL2	H06	DT0	L06	$\overline{\text{PMS}}$
B07	VDD	E07	PF3	H07	TFS0	L07	DR0
B08	D23	E08	GND	H08	D2/**IAD15**	L08	GND
B09	D20	E09	GND	H09	D3/$\overline{\textbf{IACK}}$	L09	$\overline{\text{RESET}}$
B10	D18	E10	VDD	H10	GND	L10	ELIN
B11	D17	E11	GND	H11	N/C	L11	ELOUT
B12	D16	E12	D10	H12	GND	L12	$\overline{\text{EINT}}$
C01	PWDACK	F01	A13/**IAD12**	J01	CLKOUT	M01	$\overline{\text{IRQL0}}$+PF5
C02	A6/**IAD5**	F02	N/C	J02	VDD	M02	$\overline{\text{IRQ2}}$+PF7
C03	$\overline{\text{RD}}$	F03	A12/**IAD11**	J03	N/C	M03	N/C
C04	A5/**IAD4**	F04	A11/**IAD10**	J04	VDD	M04	$\overline{\text{CMS}}$
C05	A7/**IAD6**	F05	FL1	J05	VDD	M05	GND
C06	$\overline{\text{PWD}}$	F06	N/C	J06	SCLK0	M06	DT1/FO
C07	VDD	F07	N/C	J07	D0/**IAD13**	M07	DR1/FI
C08	D21	F08	D7/$\overline{\textbf{IWR}}$	J08	RFS1/$\overline{\text{IRQ0}}$	M08	GND
C09	D19	F09	D11	J09	$\overline{\text{BG}}$	M09	N/C
C10	D15	F10	D8	J10	D1/**IAD14**	M10	$\overline{\text{EMS}}$
C11	N/C	F11	N/C	J11	VDD	M11	EE
C12	D14	F12	D9	J12	VDD	M12	ECLK

OUTLINE DIMENSIONS

Dimensions shown in millimeters.

100-Lead Metric Thin Plastic Quad Flatpack (LQFP)
(ST-100)

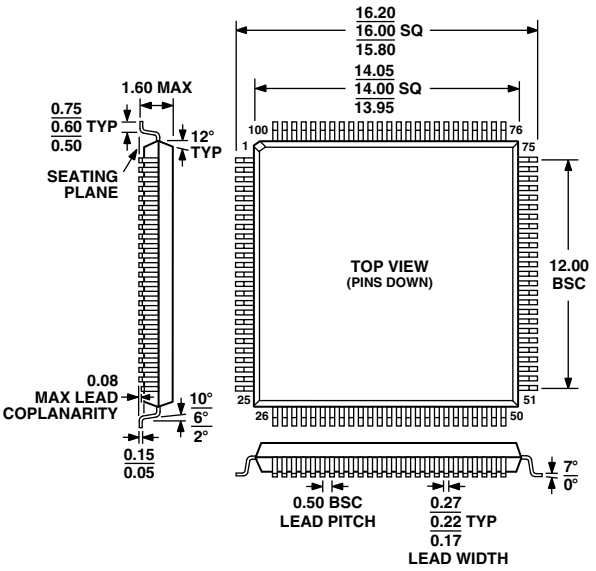

NOTE
THE ACTUAL POSITION OF EACH LEAD IS WITHIN 0.08 FROM ITS IDEAL POSITION WHEN MEASURED IN THE LATERAL DIRECTION.

OUTLINE DIMENSIONS

Dimensions shown in millimeters.

144-Ball Metric Mini-BGA (CA-144)

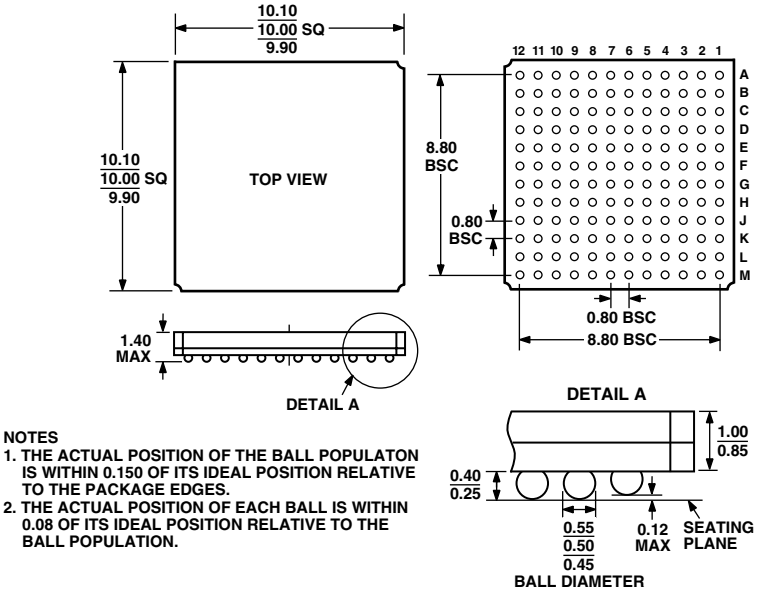

NOTES
1. THE ACTUAL POSITION OF THE BALL POPULATON IS WITHIN 0.150 OF ITS IDEAL POSITION RELATIVE TO THE PACKAGE EDGES.
2. THE ACTUAL POSITION OF EACH BALL IS WITHIN 0.08 OF ITS IDEAL POSITION RELATIVE TO THE BALL POPULATION.

ORDERING GUIDE

Part Number	Ambient Temperature Range	Instruction Rate (MHz)	Package Description	Package Option*
ADSP-2186LKST-115	0°C to +70°C	28.8	100-Lead LQFP	ST-100
ADSP-2186LBST-115	–40°C to +85°C	28.8	100-Lead LQFP	ST-100
ADSP-2186LKST-133	0°C to +70°C	33.3	100-Lead LQFP	ST-100
ADSP-2186LBST-133	–40°C to +85°C	33.3	100-Lead LQFP	ST-100
ADSP-2186LKST-160	0°C to +70°C	40.0	100-Lead LQFP	ST-100
ADSP-2186LBST-160	–40°C to +85°C	40.0	100-Lead LQFP	ST-100
ADSP-2186LBCA-160	–40°C to +85°C	40.0	144-Ball Mini-BGA	CA-144

*ST = Plastic Thin Quad Flatpack (LQFP); CA = Mini-BGA.

C00191b–2.5–3/01(B)

PRINTED IN U.S.A.