ADS7804

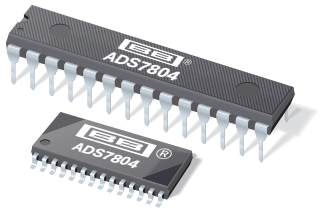

SBAS019A – JANUARY 1992 – REVISED MAY 2003

12-Bit 10μs Sampling CMOS ANALOG-to-DIGITAL CONVERTER

FEATURES

- **100kHz min SAMPLING RATE**
- **STANDARD ±10V INPUT RANGE**
- **72dB min SINAD WITH 45kHz INPUT**
- **±0.45 LSB max INL**
- **DNL: 12 Bits "No Missing Codes"**
- **SINGLE +5V SUPPLY OPERATION**
- **PIN-COMPATIBLE WITH 16-BIT ADS7805**
- **USES INTERNAL OR EXTERNAL REFERENCE**
- **COMPLETE WITH S/H, REF, CLOCK, ETC.**
- **FULL PARALLEL DATA OUTPUT**
- **100mW max POWER DISSIPATION**
- **28-PIN 0.3" PLASTIC DIP AND SO PACKAGES**

DESCRIPTION

The ADS7804 is a complete 12-bit sampling analog-to-digital (A/D) converter using state-of-the-art CMOS structures. It contains a complete 12-bit, capacitor-based, SAR A/D converter with S/H, reference, clock, interface for microprocessor use, and three-state output drivers.

The ADS7804 is specified at a 100kHz sampling rate, and guaranteed over the full temperature range. Laser-trimmed scaling resistors provide an industry-standard ±10V input range, while the innovative design allows operation from a single +5V supply, with power dissipation under 100mW.

The 28-pin ADS7804 is available in plastic 0.3" DIP and SO packages, both fully specified for operation over the industrial –40°C to +85°C range.

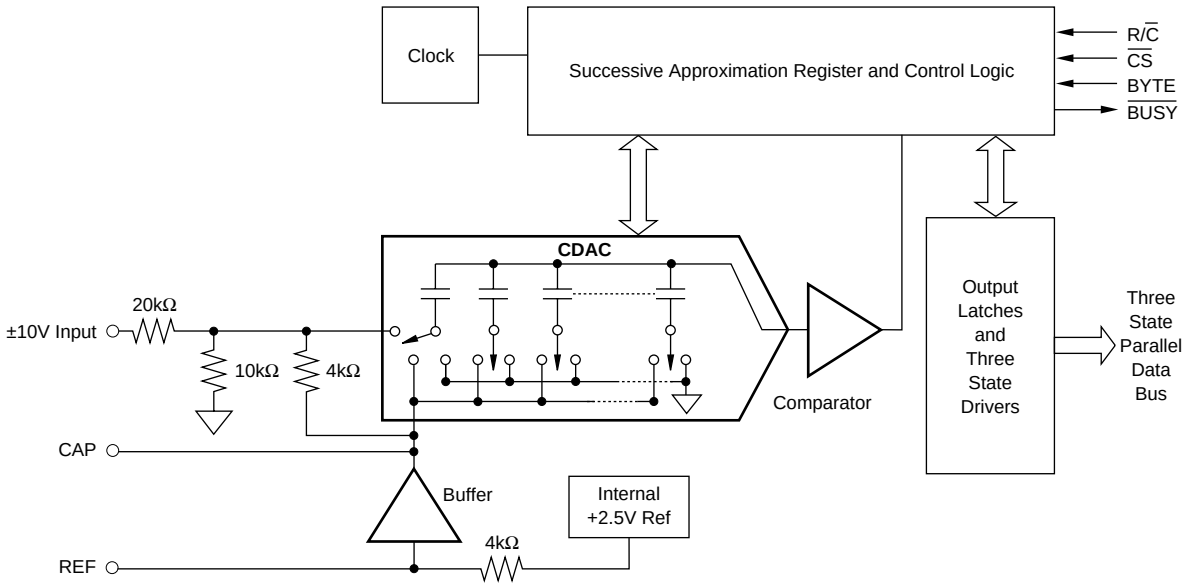

Please be aware that an important notice concerning availability, standard warranty, and use in critical applications of Texas Instruments semiconductor products and disclaimers thereto appears at the end of this data sheet.

PRODUCTION DATA information is current as of publication date. Products conform to specifications per the terms of Texas Instruments standard warranty. Production processing does not necessarily include testing of all parameters.

Copyright © 1992-2003, Texas Instruments Incorporated

ABSOLUTE MAXIMUM RATINGS

Analog Inputs: V_{IN} ..... ±25V
CAP ..... $+V_{ANA}$ +0.3V to AGND2 –0.3V
REF ..... Indefinite Short to AGND2
Momentary Short to V_{ANA}
Ground Voltage Differences: DGND, AGND1, AGND2 ..... ±0.3V
V_{ANA} 7V
V_{DIG} to V_{ANA} ..... +0.3V
V_{DIG} 7V
Digital Inputs ..... –0.3V to $+V_{DIG}$ +0.3V
Maximum Junction Temperature ..... +165°C
Internal Power Dissipation 825mW
Lead Temperature (soldering, 10s) ..... +300°C

ELECTROSTATIC DISCHARGE SENSITIVITY

This integrated circuit can be damaged by ESD. Texas Instruments recommends that all integrated circuits be handled with appropriate precautions. Failure to observe proper handling and installation procedures can cause damage.

ESD damage can range from subtle performance degradation to complete device failure. Precision integrated circuits may be more susceptible to damage because very small parametric changes could cause the device not to meet its published specifications.

PACKAGE/ORDERING INFORMATION

PRODUCT	MAXIMUM LINEARITY ERROR (LSB)	MINIMUM SIGNAL-TO-(NOISE+DISTORTION) RATIO (LSB)	PACKAGE-LEAD (DESIGNATOR)(1)	SPECIFIED TEMPERATURE RANGE	PACKAGE MARKING	ORDERING NUMBER	TRANSPORT MEDIA, QUANTITY
ADS7804P	±0.9	70	DIP-28 (NT)	–40°C to +85°C	ADS7804P	ADS7804P	Tube, 13
ADS7804PB	±0.45	72	DIP-28 (NT)	–40°C to +85°C	ADS7804PB	ADS7804PB	Tube, 13
ADS7804U	±0.9	70	SO-28 (DW)	–40°C to +85°C	ADS7804U	ADS7804U	Tube, 28
"	"	"	"	"	"	ADS7804U/1K	Tape and Reel, 1000
ADS7804UB	±0.45	72	SO-28 (DW)	–40°C to +85°C	ADS7804UB	ADS7804UB	Tube, 28
"	"	"	"	"	"	ADS7804UB/1K	Tape and Reel, 1000

NOTE: (1) For the most current specifications and package information, refer to our web site at www.ti.com.

ELECTRICAL CHARACTERISTICS

At T_A = –40°C to +85°C, f_S = 100kHz, and $V_{DIG} = V_{ANA}$ = +5V, using internal reference, unless otherwise specified.

PARAMETER	CONDITIONS	ADS7804P, U			ADS7804PB, UB			UNITS
		MIN	TYP	MAX	MIN	TYP	MAX	
RESOLUTION				12			*	Bits
ANALOG INPUT								
Voltage Ranges			±10V			*		V
Impedance			23			*		kΩ
Capacitance			35			*		pF
THROUGHPUT SPEED								
Conversion Time			5.7	8		*	*	µs
Complete Cycle	Acquire and Convert			10			*	µs
Throughput Rate		100			*			kHz
DC ACCURACY								
Integral Linearity Error				±0.9			±0.45	LSB(1)
Differential Linearity Error				±0.9			±0.45	LSB
No Missing Codes			Ensured			*		Bits
Transition Noise(2)			0.1			*		LSB
Full Scale Error(3,4)				±0.5			±0.25	%
Full Scale Error Drift			±7			±5		ppm/°C
Full Scale Error(3,4)	Ext. 2.5000V Ref			±0.5			±0.25	%
Full Scale Error Drift	Ext. 2.5000V Ref		±2			*		ppm/°C
Bipolar Zero Error(3)				±10			±10	mV
Bipolar Zero Error Drift			±2			*		ppm/°C
Power Supply Sensitivity ($V_{DIG} = V_{ANA} = V_D$)	+4.75V < V_D < +5.25V			±0.5			*	LSB
AC ACCURACY								
Spurious-Free Dynamic Range	f_{IN} = 45kHz	80			*			dB(5)
Total Harmonic Distortion	f_{IN} = 45kHz			–80			*	dB
Signal-to-(Noise+Distortion)	f_{IN} = 45kHz	70			72			dB
Signal-to-Noise	f_{IN} = 45kHz	70			72			dB
Full-Power Bandwidth(6)			250			*		kHz
SAMPLING DYNAMICS								
Aperture Delay			40			*		ns
Aperture Jitter			Sufficient to meet AC specs				*	
Transient Response	FS Step			2			*	µs
Overvoltage Recovery(7)			150			*		ns

ELECTRICAL CHARACTERISTICS (Cont.)

At T_A = –40°C to +85°C, f_S = 100kHz, and V_{DIG} = V_{ANA} = +5V, using internal reference, unless otherwise specified.

		ADS7804P, U			ADS7804PB, UB			
PARAMETER	**CONDITIONS**	**MIN**	**TYP**	**MAX**	**MIN**	**TYP**	**MAX**	**UNITS**
REFERENCE								
Internal Reference Voltage		2.48	2.5	2.52	*	*	*	V
Internal Reference Source Current (Must use external buffer.)			1			*		µA
Internal Reference Drift			8					ppm/°C
External Reference Voltage Range for Specified Linearity		2.3	2.5	2.7	*	*	*	V
External Reference Current Drain	Ext. 2.5000V Ref			100			*	µA
DIGITAL INPUTS								
Logic Levels								
V_{IL}		–0.3		+0.8	*		*	V
V_{IH}		+2.0		V_D +0.3V	*		*	V
I_{IL}				±10			*	µA
I_{IH}				±10			*	µA
DIGITAL OUTPUTS								
Data Format			Parallel 12 Bits					
Data Coding			Binary Two's Complement					
V_{OL}	I_{SINK} = 1.6mA			+0.4			*	V
V_{OH}	I_{SOURCE} = 500µA	+4			*			V
Leakage Current	High-Z State, V_{OUT} = 0V to V_{DIG}			±5			*	µA
Output Capacitance	High-Z State			15			15	pF
DIGITAL TIMING								
Bus Access Time				83			*	ns
Bus Relinquish Time				83			*	ns
POWER SUPPLIES								
Specified Performance								
V_{DIG}	Must be ≤ V_{ANA}	+4.75	+5	+5.25	*	*	*	V
V_{ANA}		+4.75	+5	+5.25	*	*	*	V
$+I_{DIG}$			0.3			*		mA
$+I_{ANA}$			16			*		mA
Power Dissipation	f_S = 100kHz			100			*	mW
TEMPERATURE RANGE								
Specified Performance		–40		+85	*		*	°C
Derated Performance		–55		+125	*		*	°C
Storage		–65		+150	*		*	°C
Thermal Resistance (θ_{JA})								
Plastic DIP			75			*		°C/W
SO			75			*		°C/W

NOTES: (1) LSB means Least Significant Bit. For the 12-bit, ±10V input ADS7804, one LSB is 4.88mV. (2) Typical rms noise at worst case transitions and temperatures. (3) As measured with fixed resistors shown in Figure 4. Adjustable to zero with external potentiometer. (4) Full scale error is the worst case of –Full Scale or +Full Scale untrimmed deviation from ideal first and last code transitions, divided by the transition voltage (not divided by the full-scale range) and includes the effect of offset error. (5) All specifications in dB are referred to a full-scale ±10V input. (6) Full-Power Bandwidth defined as Full-Scale input frequency at which Signal-to-(Noise + Distortion) degrades to 60dB, or 10 bits of accuracy. (7) Recovers to specified performance after 2 x FS input overvoltage.

PIN CONFIGURATION

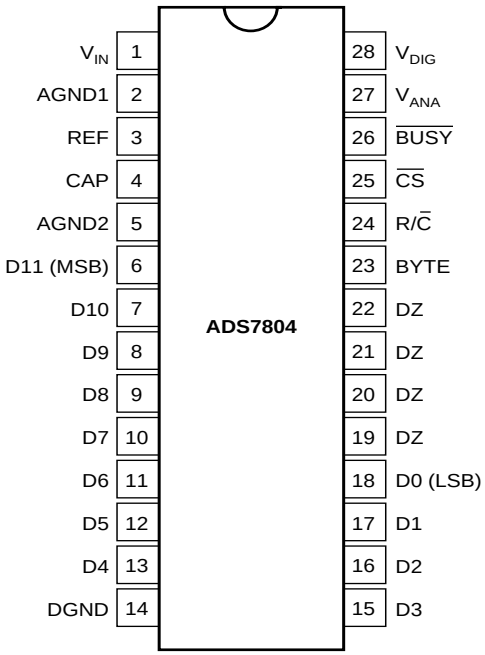

PIN #	NAME	DIGITAL I/O	DESCRIPTION
1	V_{IN}		Analog Input. See Figure 7.
2	AGND1		Analog Ground. Used internally as ground reference point.
3	REF		Reference Input/Output. 2.2µF tantalum capacitor to ground.
4	CAP		Reference Buffer Capacitor. 2.2µF tantalum capacitor to ground.
5	AGND2		Analog Ground.
6	D11 (MSB)	O	Data Bit 11. Most Significant Bit (MSB) of conversion results. Hi-Z state when $\overline{CS}$ is HIGH, or when R/$\overline{C}$ is LOW.
7	D10	O	Data Bit 10. Hi-Z state when $\overline{CS}$ is HIGH, or when R/$\overline{C}$ is LOW.
8	D9	O	Data Bit 9. Hi-Z state when $\overline{CS}$ is HIGH, or when R/$\overline{C}$ is LOW.
9	D8	O	Data Bit 8. Hi-Z state when $\overline{CS}$ is HIGH, or when R/$\overline{C}$ is LOW.
10	D7	O	Data Bit 7. Hi-Z state when $\overline{CS}$ is HIGH, or when R/$\overline{C}$ is LOW.
11	D6	O	Data Bit 6. Hi-Z state when $\overline{CS}$ is HIGH, or when R/$\overline{C}$ is LOW.
12	D5	O	Data Bit 5. Hi-Z state when $\overline{CS}$ is HIGH, or when R/$\overline{C}$ is LOW.
13	D4	O	Data Bit 4. Hi-Z state when $\overline{CS}$ is HIGH, or when R/$\overline{C}$ is LOW.
14	DGND		Digital Ground.
15	D3	O	Data Bit 3. Hi-Z state when $\overline{CS}$ is HIGH, or when R/$\overline{C}$ is LOW.
16	D2	O	Data Bit 2. Hi-Z state when $\overline{CS}$ is HIGH, or when R/$\overline{C}$ is LOW.
17	D1	O	Data Bit 1. Hi-Z state when $\overline{CS}$ is HIGH, or when R/$\overline{C}$ is LOW.
18	D0 (LSB)	O	Data Bit 0. Lease Significant Bit (LSB) of conversion results. Hi-Z state when $\overline{CS}$ is HIGH, or when R/$\overline{C}$ is LOW.
19	DZ	O	LOW when $\overline{CS}$ LOW, R/$\overline{C}$ HIGH. Hi-Z state when $\overline{CS}$ is HIGH, or when R/$\overline{C}$ is LOW.
20	DZ	O	LOW when $\overline{CS}$ LOW, R/$\overline{C}$ HIGH. Hi-Z state when $\overline{CS}$ is HIGH, or when R/$\overline{C}$ is LOW.
21	DZ	O	LOW when $\overline{CS}$ LOW, R/$\overline{C}$ HIGH. Hi-Z state when $\overline{CS}$ is HIGH, or when R/$\overline{C}$ is LOW.
22	DZ	O	LOW when $\overline{CS}$ LOW, R/$\overline{C}$ HIGH. Hi-Z state when $\overline{CS}$ is HIGH, or when R/$\overline{C}$ is LOW.
23	BYTE	I	Selects 8 most significant bits (LOW) or 8 least significant bits (HIGH).
24	R/$\overline{C}$	I	With $\overline{CS}$ LOW and $\overline{BUSY}$ HIGH, a Falling Edge on R/$\overline{C}$ Initiates a New Conversion. With $\overline{CS}$ LOW, a rising edge on R/$\overline{C}$ enables the parallel output.
25	$\overline{CS}$	I	Internally OR'd with R/$\overline{C}$. If R/$\overline{C}$ LOW, a falling edge on $\overline{CS}$ initiates a new conversion.
26	$\overline{BUSY}$	O	At the start of a conversion, $\overline{BUSY}$ goes LOW and stays LOW until the conversion is completed and the digital outputs have been updated.
27	V_{ANA}		Analog Supply Input. Nominally +5V. Decouple to ground with 0.1µF ceramic and 10µF tantalum capacitors.
28	V_{DIG}		Digital Supply Input. Nominally +5V. Connect directly to pin 27. Must be ≤ V_{ANA}.

TABLE I. Pin Assignments.

BASIC OPERATION

Figure 1 shows a basic circuit to operate the ADS7804 with a full parallel data output. Taking R/$\overline{C}$ (pin 24) LOW for a minimum of 40ns (6µs max) will initiate a conversion. $\overline{BUSY}$ (pin 26) will go LOW and stay LOW until the conversion is completed and the output registers are updated. Data will be output in Binary Two's Complement with the MSB on pin 6. $\overline{BUSY}$ going HIGH can be used to latch the data. All convert commands will be ignored while $\overline{BUSY}$ is LOW.

The ADS7804 will begin tracking the input signal at the end of the conversion. Allowing 10µs between convert commands assures accurate acquisition of a new signal.

The offset and gain are adjusted internally to allow external trimming with a single supply. The external resistors compensate for this adjustment and can be left out if the offset and gain will be corrected in software (refer to the Calibration section).

STARTING A CONVERSION

The combination of $\overline{CS}$ (pin 25) and R/$\overline{C}$ (pin 24) LOW for a minimum of 40ns immediately puts the sample/hold of the ADS7804 in the hold state and starts conversion 'n'. $\overline{BUSY}$ (pin 26) will go LOW and stay LOW until conversion 'n' is completed and the internal output register has been updated. All new convert commands during $\overline{BUSY}$ LOW will be ignored. $\overline{CS}$ and/or R/$\overline{C}$ must go HIGH before $\overline{BUSY}$ goes HIGH or a new conversion will be initiated without sufficient time to acquire a new signal.

The ADS7804 will begin tracking the input signal at the end of the conversion. Allowing 10µs between convert commands assures accurate acquisition of a new signal. Refer to Table II for a summary of $\overline{CS}$, R/$\overline{C}$, and $\overline{BUSY}$ states and Figures 3 through 5 for timing diagrams.

$\overline{CS}$	R/$\overline{C}$	$\overline{BUSY}$	OPERATION
1	X	X	None. Databus is in Hi-Z state.
↓	0	1	Initiates conversion 'n'. Databus remains in Hi-Z state.
0	↓	1	Initiates conversion 'n'. Databus enters Hi-Z state.
0	1	↑	Conversion 'n' completed. Valid data from conversion 'n' on the databus.
↓	1	1	Enables databus with valid data from conversion 'n'.
↓	1	0	Enables databus with valid data from conversion 'n-1'(1). Conversion n in process.
0	↑	0	Enables databus with valid data from conversion 'n-1'(1). Conversion 'n' in process.
0	0	↑	New conversion initiated without acquisition of a new signal. Data will be invalid. $\overline{CS}$ and/or R/$\overline{C}$ must be HIGH when $\overline{BUSY}$ goes HIGH.
X	X	0	New convert commands ignored. Conversion 'n' in process.

NOTE: (1) See Figures 2 and 3 for constraints on data valid from conversion "n-1".

Table II. Control Line Functions for Read and Convert.

$\overline{CS}$ and R/$\overline{C}$ are internally OR'd and level triggered. There is not a requirement which input goes LOW first when initiating a conversion. If, however, it is critical that $\overline{CS}$ or R/$\overline{C}$ initiates conversion 'n', be sure the less critical input is LOW at least 10ns prior to the initiating input.

To reduce the number of control pins, $\overline{CS}$ can be tied LOW using R/$\overline{C}$ to control the read and convert modes. This will have no effect when using the internal data clock in the serial output mode. However, the parallel output will become active whenever R/$\overline{C}$ goes HIGH. Refer to the Reading Data section.

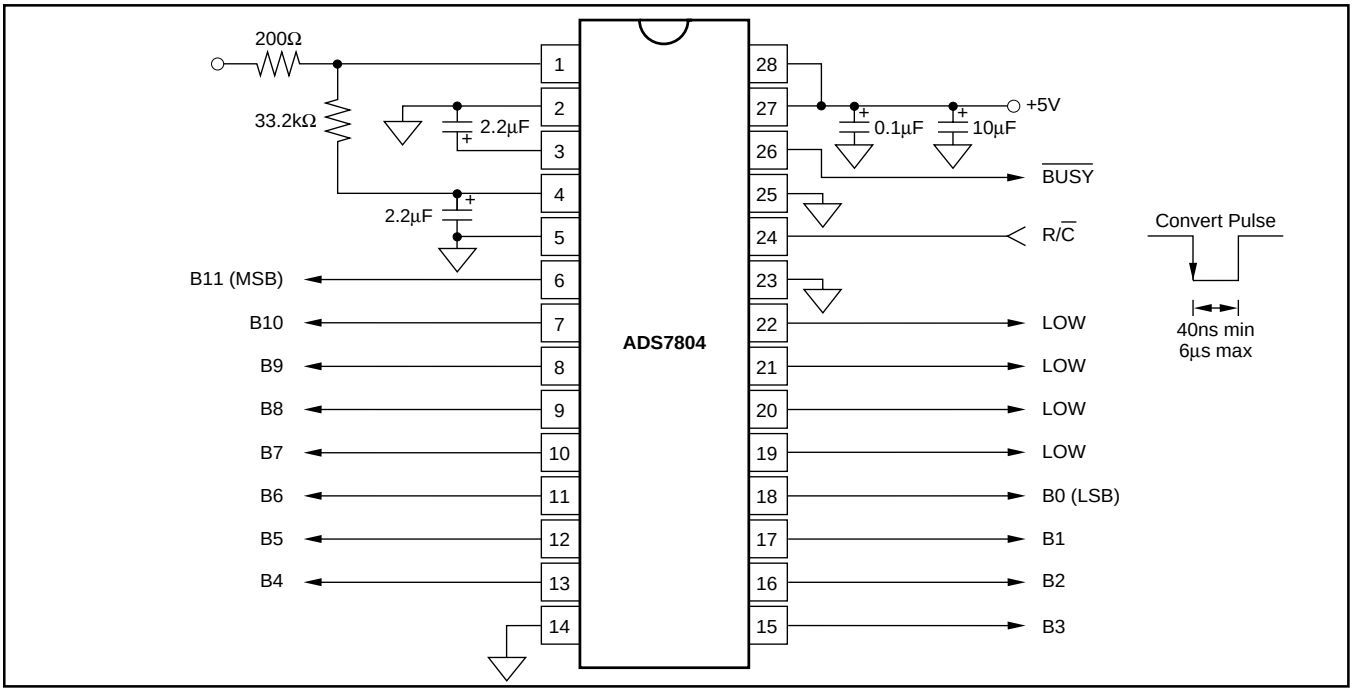

FIGURE 1. Basic Operation.

READING DATA

The ADS7804 outputs full or byte-reading parallel data in Binary Two's Complement data output format. The parallel output will be active when R/$\overline{C}$ (pin 24) is HIGH and $\overline{CS}$ (pin 25) is LOW. Any other combination of $\overline{CS}$ and R/$\overline{C}$ will tri-state the parallel output. Valid conversion data can be read in a full parallel, 12-bit word or two 8-bit bytes on pins 6-13 and pins 15-22. BYTE (pin 23) can be toggled to read both bytes within one conversion cycle. Refer to Table III for ideal output codes and Figure 2 for bit locations relative to the state of BYTE.

DESCRIPTION	ANALOG INPUT	DIGITAL OUTPUT BINARY TWO'S COMPLEMENT	
		BINARY CODE	HEX CODE
Full Scale Range	±10V		
Least Significant Bit (LSB)	4.88mV		
+Full Scale (10V – 1LSB)	9.99512V	0111 1111 1111	7FF
Midscale	0V	0000 0000 0000	000
One LSB below Midscale	–4.88mV	1111 1111 1111	FFF
–Full Scale	–10V	1000 0000 0000	800

Table III. Ideal Input Voltages and Output Codes.

PARALLEL OUTPUT (After a Conversion)

After conversion 'n' is completed and the output registers have been updated, $\overline{BUSY}$ (pin 26) will go HIGH. Valid data from conversion 'n' will be available on D11-D0 (pin 6-13 and 15-18 when BYTE is LOW). $\overline{BUSY}$ going HIGH can be used to latch the data. Refer to Table IV and Figures 3 and 5 for timing specifications.

PARALLEL OUTPUT (During a Conversion)

After conversion 'n' has been initiated, valid data from conversion 'n-1' can be read and will be valid up to 16µs after the start of conversion 'n'. Do not attempt to read data from 16µs after the start of conversion 'n' until $\overline{BUSY}$ (pin 26) goes HIGH; this may result in reading invalid data. Refer to Table IV and Figures 3 and 5 for timing specifications.

Note! For the best possible performance, data should not be read during a conversion. The switching noise of the asynchronous data transfer can cause digital feedthrough degrading the converter's performance.

The number of control lines can be reduced by tieing $\overline{CS}$ LOW while using R/$\overline{C}$ to initiate conversions and activate the output mode of the converter. See Figure 3.

SYMBOL	DESCRIPTION	MIN	TYP	MAX	UNITS
t_1	Convert Pulse Width	40		6000	ns
t_2	Data Valid Delay after R/$\overline{C}$ LOW			8	µs
t_3	$\overline{BUSY}$ Delay from R/$\overline{C}$ LOW			65	ns
t_4	$\overline{BUSY}$ LOW			8	µs
t_5	$\overline{BUSY}$ Delay after End of Conversion		220		ns
t_6	Aperture Delay		40		ns
t_7	Conversion Time		7.6	8	µs
t_8	Acquisition Time			2	µs
t_9	Bus Relinquish Time	10	35	83	ns
t_{10}	$\overline{BUSY}$ Delay after Data Valid	50	200		ns
t_{11}	Previous Data Valid after R/$\overline{C}$ LOW		7.4		µs
$t_7 + t_6$	Throughput Time		9	10	µs
t_{12}	R/$\overline{C}$ to $\overline{CS}$ Setup Time	10			ns
t_{13}	Time Between Conversions	10			µs
t_{14}	Bus Access Time and BYTE Delay	10		83	ns

TABLE IV. Conversion Timing.

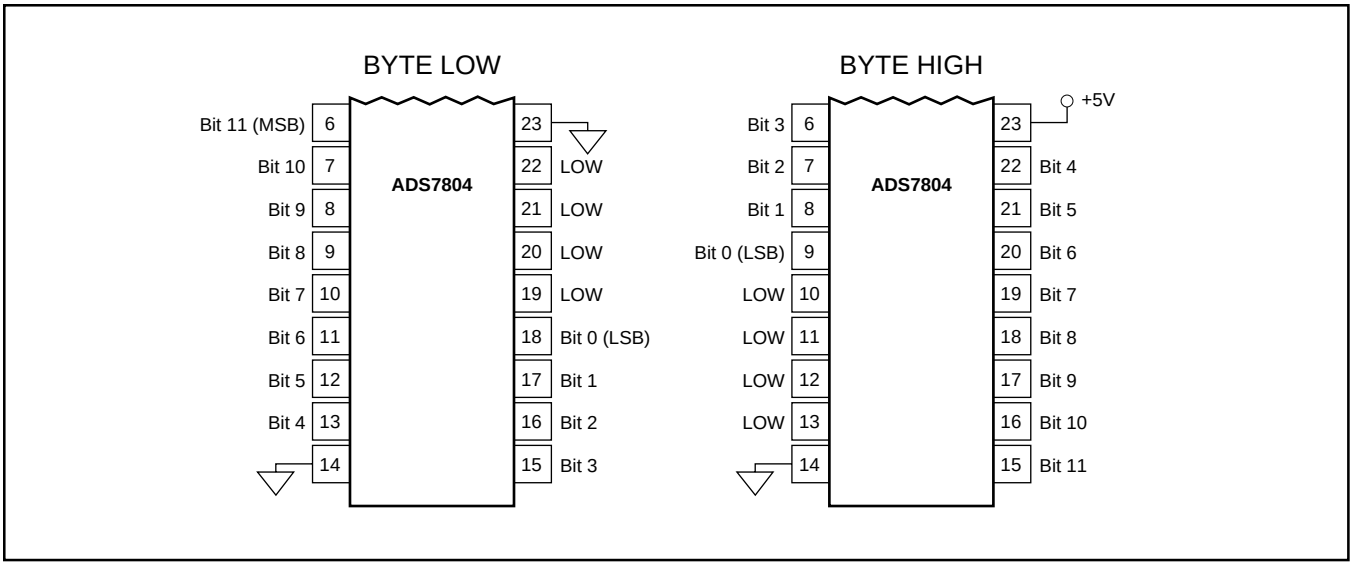

FIGURE 2. Bit Locations Relative to State of BYTE (pin 23).

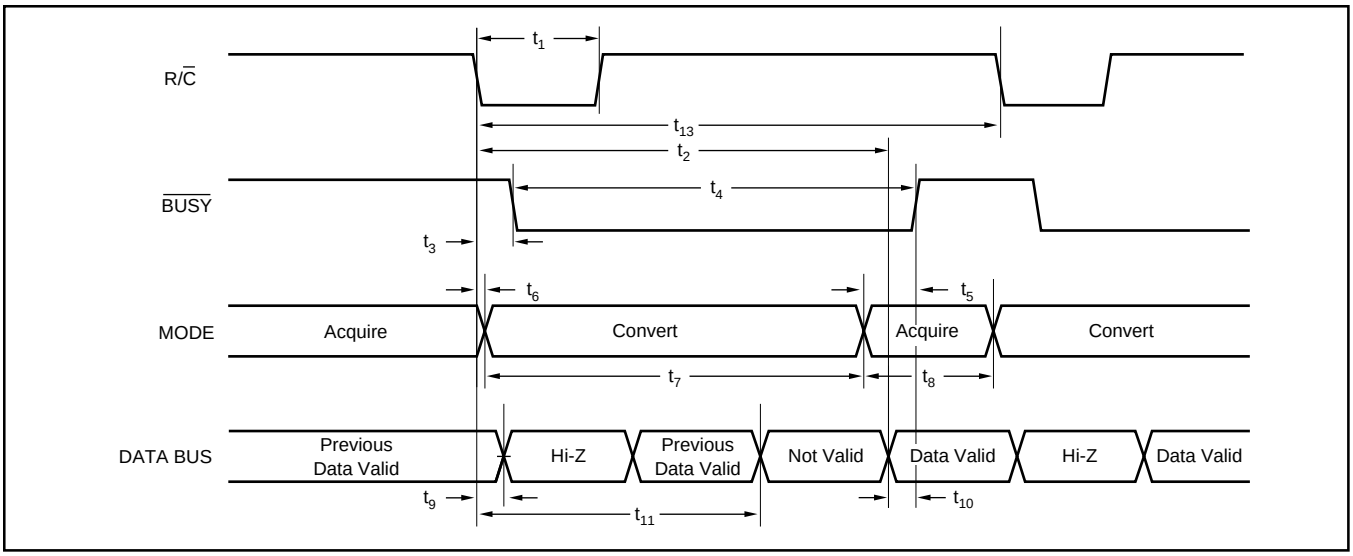

FIGURE 3. Conversion Timing with Outputs Enabled after Conversion ($\overline{CS}$ Tied LOW.)

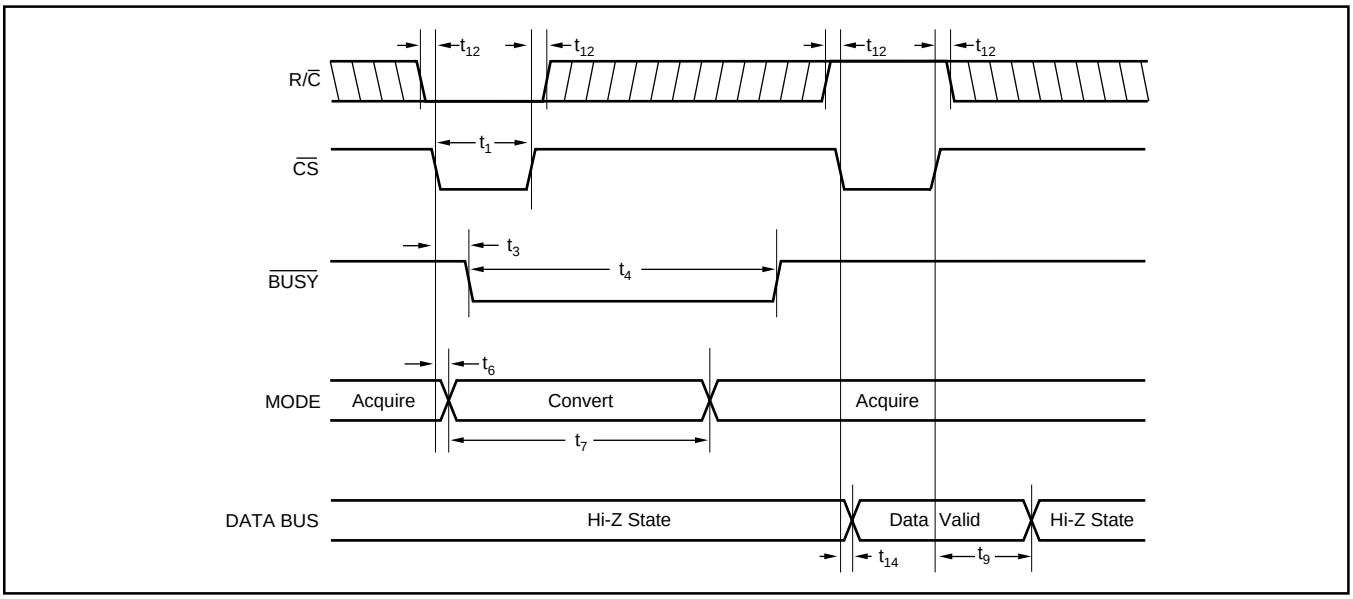

FIGURE 4. Using $\overline{CS}$ to Control Conversion and Read Timing.

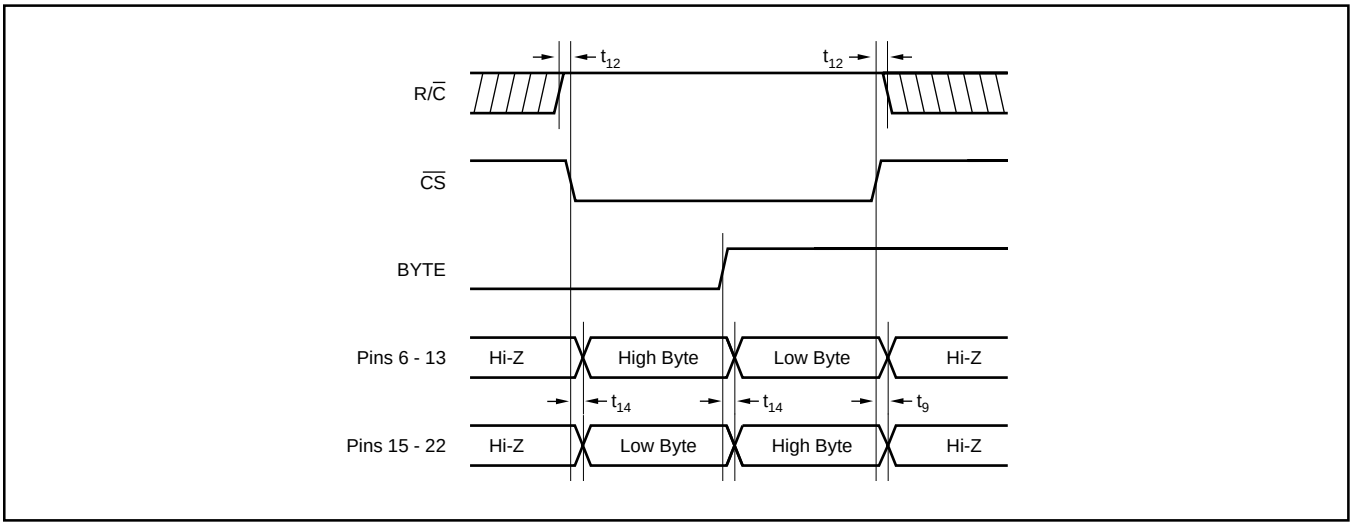

FIGURE 5. Using $\overline{CS}$ and BYTE to Control Data Bus.

INPUT RANGES

The ADS7804 offers a standard ±10V input range. Figure 6 shows the necessary circuit connections for the ADS7804 with and without hardware trim. Offset and full scale error(1) specifications are tested and guaranteed with the fixed resistors shown in Figure 6b. Adjustments for offset and gain are described in the Calibration section of this data sheet.

The offset and gain are adjusted internally to allow external trimming with a single supply. The external resistors compensate for this adjustment and can be left out if the offset and gain will be corrected in software (refer to the Calibration section).

The nominal input impedance of 23kW results from the combination of the internal resistor network shown on the front page of the product data sheet and the external resistors. The input resistor divider network provides inherent overvoltage protection guaranteed to at least ±25V. The 1% resistors used for the external circuitry do not compromise the accuracy or drift of the converter. They have little influence relative to the internal resistors, and tighter tolerances are not required.

NOTE: (1) Full scale error includes offset and gain errors measured at both +FS and –FS.

CALIBRATION

The ADS7804 can be trimmed in hardware or software. The offset should be trimmed before the gain since the offset directly affects the gain. To achieve optimum performance, several iterations may be required.

HARDWARE CALIBRATION

To calibrate the offset and gain of the ADS7804, install the proper resistors and potentiometers as shown in Figure 6a. The calibration range is ±15mV for the offset and ±60mV for the gain.

SOFTWARE CALIBRATION

To calibrate the offset and gain of the ADS7804 in software, no external resistors are required. See the No Calibration section for details on the effects of the external resistors. Refer to Table V for range of offset and gain errors with and without external resistors.

NO CALIBRATION

See Figure 6b for circuit connections. The external resistors shown in Figure 6b may not be necessary in some applications. These resistors provide compensation for an internal adjustment of the offset and gain which allows calibration with a single supply. The nominal transfer function of the ADS7804 will be bound by the shaded region seen in Figure 7 with a typical offset of –30mV and a typical gain error of –1.5%. Refer to Table V for range of offset and gain errors with and without external resistors.

	WITH EXTERNAL RESISTORS	WITHOUT EXTERNAL RESISTORS	UNITS
BPZ	–10 < BPZ < 10 –2 < BPZ < 2	–45 < BPZ < 5 –8 < BPZ < 1	mV LSBs
Gain Error	–0.5 < error < 0.5 –0.25 < error < 0.25(1)	–0.6 < error < –0.55 –0.45 < error < –0.3(1)	% of FSR
NOTE: (1) High Grade.			

TABLE VII. Bipolar Offset and Gain Errors With and Without External Resistors.

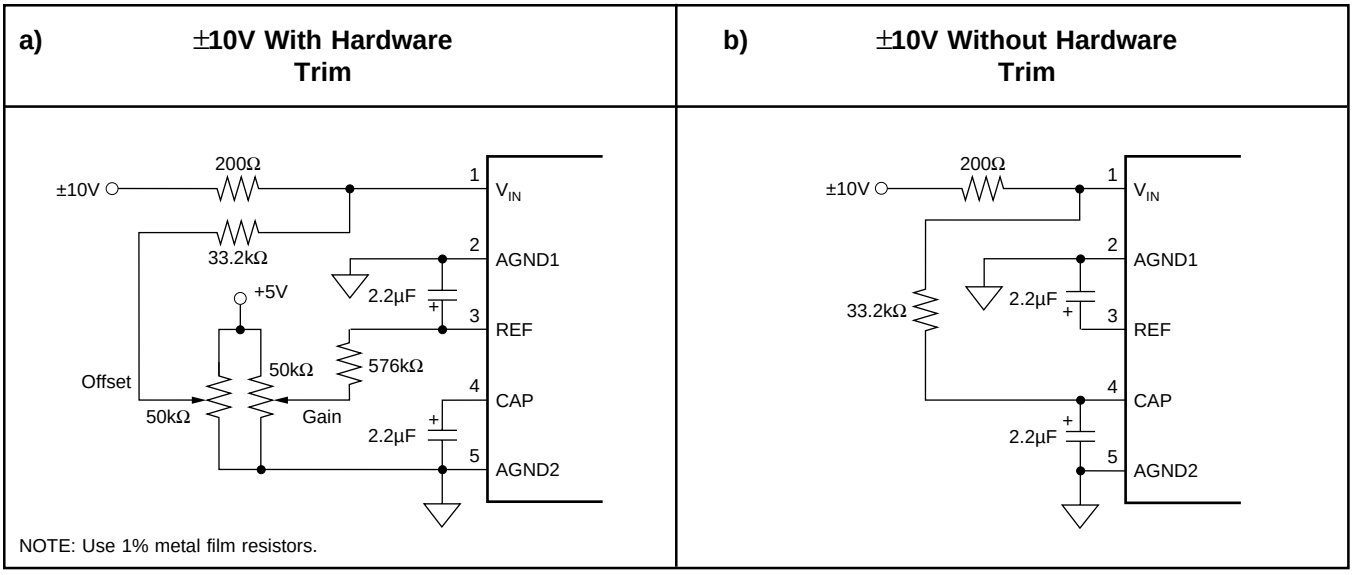

FIGURE 6. Circuit Diagram With and Without External Resistors.

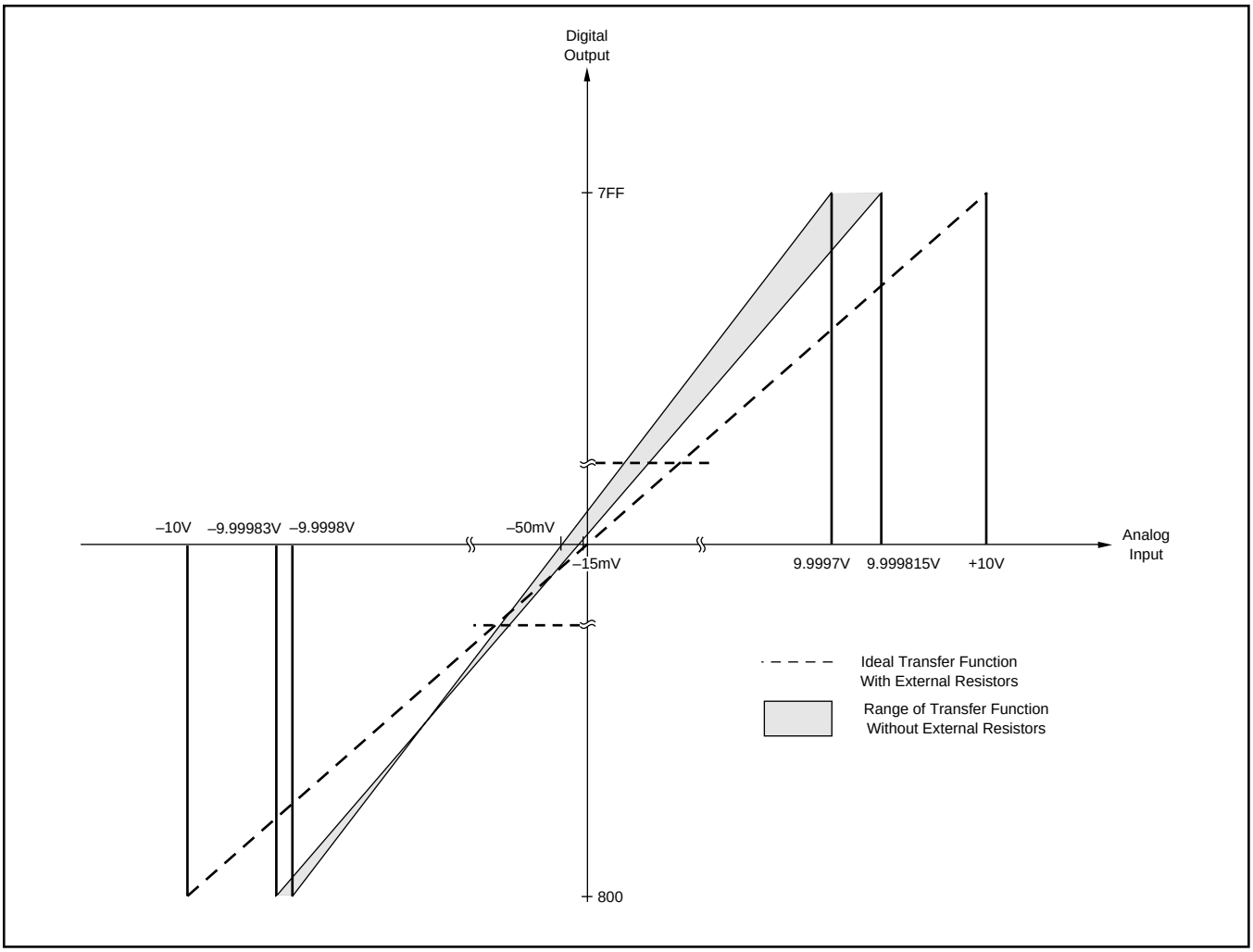

FIGURE 7. Full Scale Transfer Function.

REFERENCE

The ADS7804 can operate with its internal 2.5V reference or an external reference. By applying an external reference to pin 5, the internal reference can be bypassed. The reference voltage at REF is buffered internally with the output on CAP (pin 4).

The internal reference has an 8 ppm/°C drift (typical) and accounts for approximately 20% of the full scale error (FSE = ±0.5% for low grade, ±0.25% for high grade).

REF

REF (pin 3) is an input for an external reference or the output for the internal 2.5V reference. A 2.2µF capacitor should be connected as close to the REF pin as possible. The capacitor and the output resistance of REF create a low pass filter to bandlimit noise on the reference. Using a smaller value capacitor will introduce more noise to the reference degrading the SNR and SINAD. The REF pin should not be used to drive external AC or DC loads.

The range for the external reference is 2.3V to 2.7V and determines the actual LSB size. Increasing the reference voltage will increase the full scale range and the LSB size of the converter which can improve the SNR.

CAP

CAP (pin 4) is the output of the internal reference buffer. A 2.2µF capacitor should be placed as close to the CAP pin as possible to provide optimum switching currents for the CDAC throughout the conversion cycle and compensation for the output of the internal buffer. Using a capacitor any smaller than 1µF can cause the output buffer to oscillate and may not have sufficient charge for the CDAC. Capacitor values larger than 2.2µF will have little affect on improving performance.

The output of the buffer is capable of driving up to 2mA of current to a DC load. DC loads requiring more than 2mA of current from the CAP pin will begin to degrade the linearity of the ADS7804. Using an external buffer will allow the internal reference to be used for larger DC loads and AC loads. Do not attempt to directly drive an AC load with the output voltage on CAP. This will cause performance degradation of the converter.

LAYOUT

POWER

For optimum performance, tie the analog and digital power pins to the same +5V power supply and tie the analog and digital grounds together. As noted in the electrical specifications, the ADS7804 uses 90% of its power for the analog circuitry. The ADS7804 should be considered as an analog component.

The +5V power for the A/D should be separate from the +5V used for the system's digital logic. Connecting V_{DIG} (pin 28) directly to a digital supply can reduce converter performance due to switching noise from the digital logic. For best performance, the +5V supply can be produced from whatever analog supply is used for the rest of the analog signal conditioning. If +12V or +15V supplies are present, a simple +5V regulator can be used. Although it is not suggested, if the digital supply must be used to power the converter, be sure to properly filter the supply. Either using a filtered digital supply or a regulated analog supply, both V_{DIG} and V_{ANA} should be tied to the same +5V source.

GROUNDING

Three ground pins are present on the ADS7804. DGND is the digital supply ground. AGND2 is the analog supply ground. AGND1 is the ground which all analog signals internal to the A/D are referenced. AGND1 is more susceptible to current induced voltage drops and must have the path of least resistance back to the power supply.

All the ground pins of the A/D should be tied to the analog ground plane, separated from the system's digital logic ground, to achieve optimum performance. Both analog and digital ground planes should be tied to the "system" ground as near to the power supplies as possible. This helps to prevent dynamic digital ground currents from modulating the analog ground through a common impedance to power ground.

SIGNAL CONDITIONING

The FET switches used for the sample hold on many CMOS A/D converters release a significant amount of charge injection which can cause the driving op amp to oscillate. The FET switch on the ADS7804, compared to the FET switches on other CMOS A/D converters, releases 5%-10% of the charge. There is also a resistive front end which attenuates any charge which is released. The end result is a minimal requirement for the anti-alias filter on the front end. Any op amp sufficient for the signal in an application will be sufficient to drive the ADS7804.

The resistive front end of the ADS7804 also provides a guaranteed ±25V overvoltage protection. In most cases, this eliminates the need for external input protection circuitry.

INTERMEDIATE LATCHES

The ADS7804 does have tri-state outputs for the parallel port, but intermediate latches should be used if the bus will be active during conversions. If the bus is not active during conversion, the tri-state outputs can be used to isolate the A/D from other peripherals on the same bus. Tri-state outputs can also be used when the A/D is the only peripheral on the data bus.

Intermediate latches are beneficial on any monolithic A/D converter. The ADS7804 has an internal LSB size of 610μV. Transients from fast switching signals on the parallel port, even when the A/D is tri-stated, can be coupled through the substrate to the analog circuitry causing degradation of converter performance. The effects of this phenomenon will be more obvious when using the pin-compatible ADS7805 or any of the other 16-bit converters in the ADS Family. This is due to the smaller internal LSB size of 38μV.

NT (R-PDIP-T**)

PLASTIC DUAL-IN-LINE PACKAGE

24 PINS SHOWN

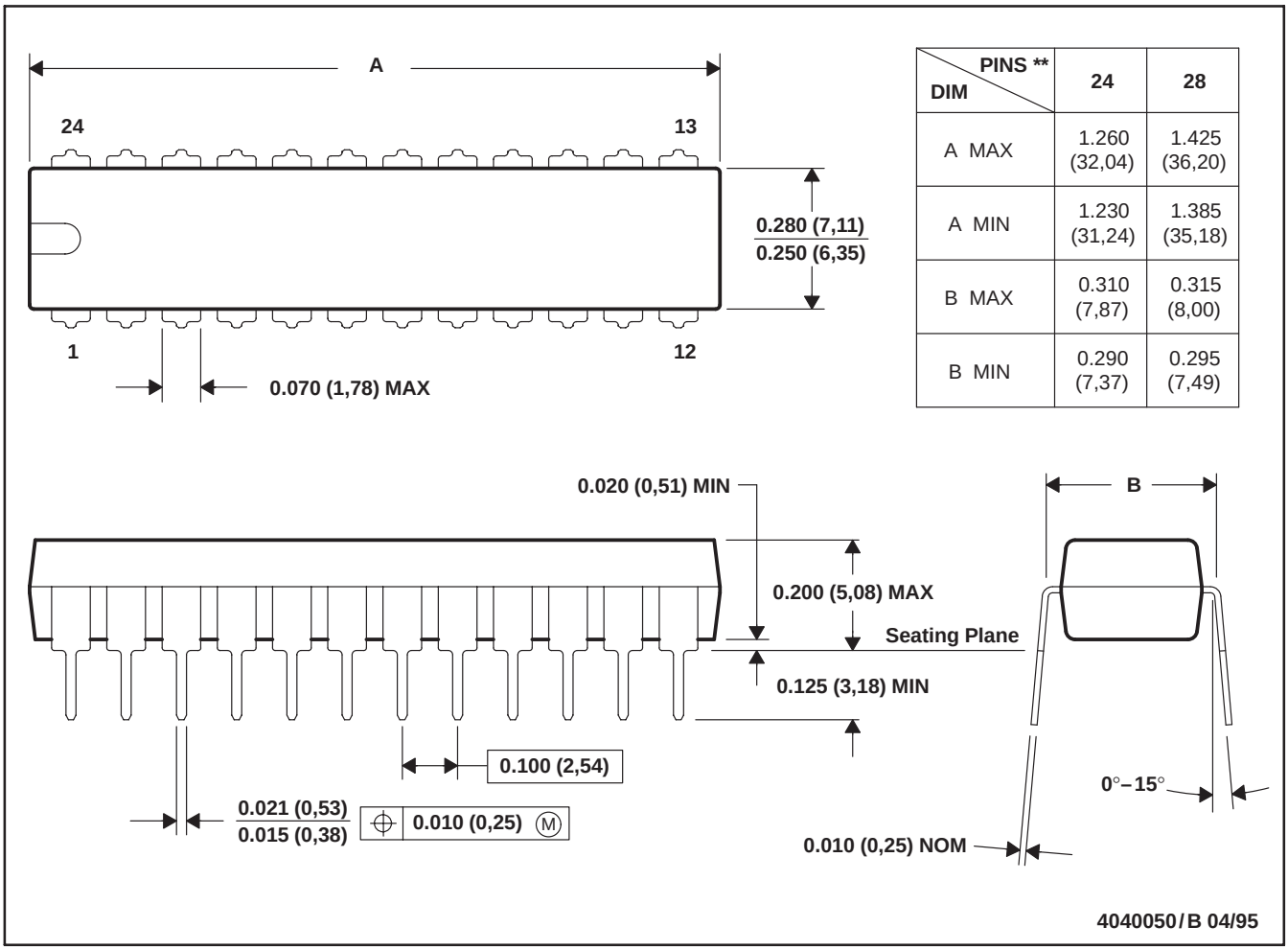

DIM \ PINS **	24	28
A MAX	1.260 (32,04)	1.425 (36,20)
A MIN	1.230 (31,24)	1.385 (35,18)
B MAX	0.310 (7,87)	0.315 (8,00)
B MIN	0.290 (7,37)	0.295 (7,49)

NOTES: A. All linear dimensions are in inches (millimeters).
B. This drawing is subject to change without notice.

DW (R-PDSO-G)** **PLASTIC SMALL-OUTLINE PACKAGE**

16 PINS SHOWN

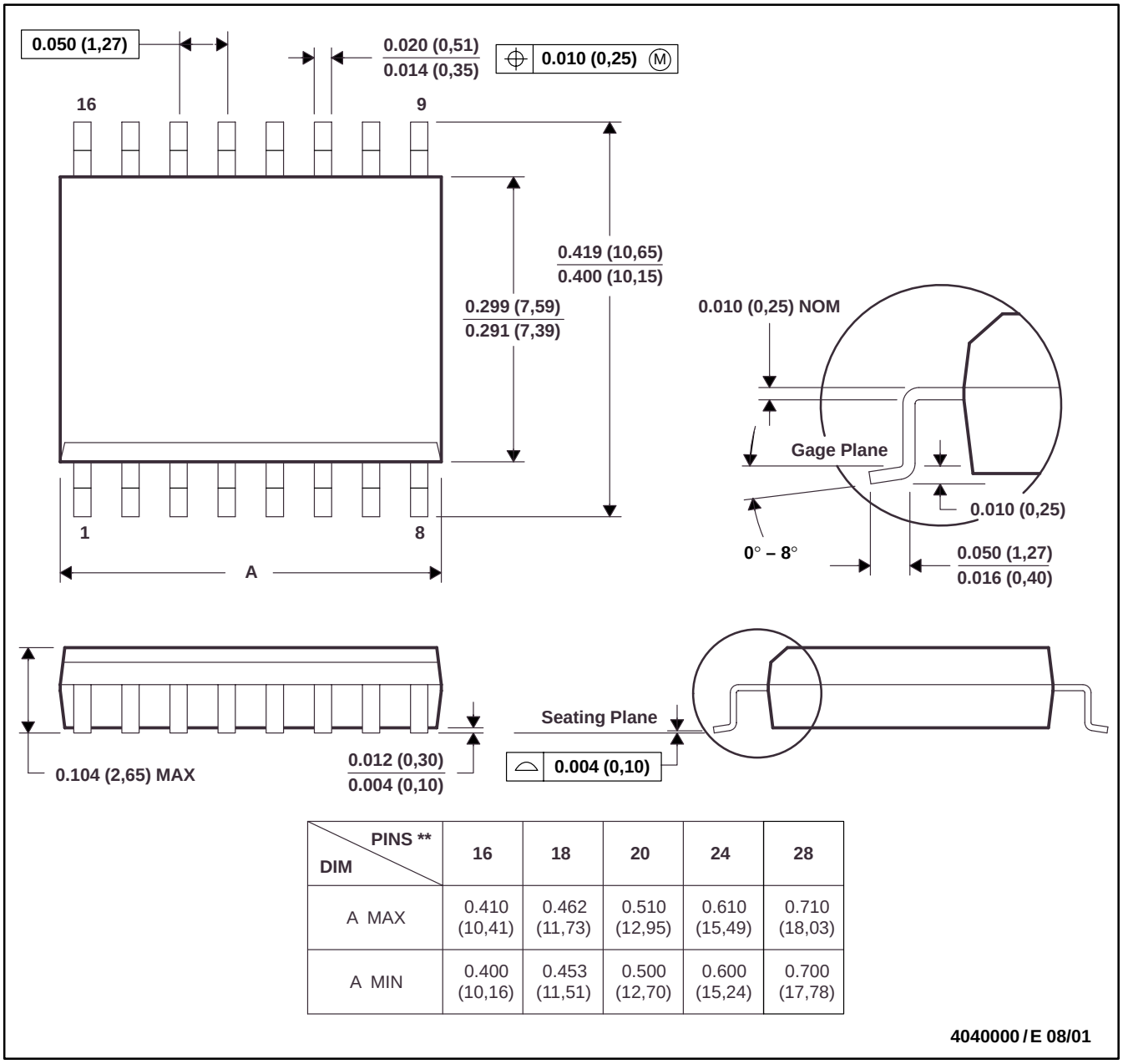

DIM \ PINS **	16	18	20	24	28
A MAX	0.410 (10,41)	0.462 (11,73)	0.510 (12,95)	0.610 (15,49)	0.710 (18,03)
A MIN	0.400 (10,16)	0.453 (11,51)	0.500 (12,70)	0.600 (15,24)	0.700 (17,78)

4040000 / E 08/01

NOTES: A. All linear dimensions are in inches (millimeters).
B. This drawing is subject to change without notice.
C. Body dimensions do not include mold flash or protrusion not to exceed 0.006 (0,15).
D. Falls within JEDEC MS-013

PACKAGING INFORMATION

Orderable Device	Status (1)	Package Type	Package Drawing	Pins	Package Qty	Eco Plan (2)	Lead/Ball Finish (6)	MSL Peak Temp (3)	Op Temp (°C)	Device Marking (4/5)	Samples
ADS7804U	NRND	SOIC	DW	28	20	Green (RoHS & no Sb/Br)	CU NIPDAU-DCC	Level-3-260C-168 HR	-40 to 85	ADS7804U B	
ADS7804U/1K	NRND	SOIC	DW	28	1000	Green (RoHS & no Sb/Br)	CU NIPDAU-DCC	Level-3-260C-168 HR	-40 to 85	ADS7804U B	
ADS7804UB	NRND	SOIC	DW	28	20	Green (RoHS & no Sb/Br)	CU NIPDAU-DCC	Level-3-260C-168 HR	-40 to 85	ADS7804U B	
ADS7804UE4	NRND	SOIC	DW	28	20	Green (RoHS & no Sb/Br)	CU NIPDAU-DCC	Level-3-260C-168 HR	-40 to 85	ADS7804U B	
ADS7804UG4	NRND	SOIC	DW	28	20	Green (RoHS & no Sb/Br)	CU NIPDAU-DCC	Level-3-260C-168 HR	-40 to 85	ADS7804U B	

(1) The marketing status values are defined as follows:
ACTIVE: Product device recommended for new designs.
LIFEBUY: TI has announced that the device will be discontinued, and a lifetime-buy period is in effect.
NRND: Not recommended for new designs. Device is in production to support existing customers, but TI does not recommend using this part in a new design.
PREVIEW: Device has been announced but is not in production. Samples may or may not be available.
OBSOLETE: TI has discontinued the production of the device.

(2) Eco Plan - The planned eco-friendly classification: Pb-Free (RoHS), Pb-Free (RoHS Exempt), or Green (RoHS & no Sb/Br) - please check http://www.ti.com/productcontent for the latest availability information and additional product content details.
TBD: The Pb-Free/Green conversion plan has not been defined.
Pb-Free (RoHS): TI's terms "Lead-Free" or "Pb-Free" mean semiconductor products that are compatible with the current RoHS requirements for all 6 substances, including the requirement that lead not exceed 0.1% by weight in homogeneous materials. Where designed to be soldered at high temperatures, TI Pb-Free products are suitable for use in specified lead-free processes.
Pb-Free (RoHS Exempt): This component has a RoHS exemption for either 1) lead-based flip-chip solder bumps used between the die and package, or 2) lead-based die adhesive used between the die and leadframe. The component is otherwise considered Pb-Free (RoHS compatible) as defined above.
Green (RoHS & no Sb/Br): TI defines "Green" to mean Pb-Free (RoHS compatible), and free of Bromine (Br) and Antimony (Sb) based flame retardants (Br or Sb do not exceed 0.1% by weight in homogeneous material)

(3) MSL, Peak Temp. - The Moisture Sensitivity Level rating according to the JEDEC industry standard classifications, and peak solder temperature.

(4) There may be additional marking, which relates to the logo, the lot trace code information, or the environmental category on the device.

(5) Multiple Device Markings will be inside parentheses. Only one Device Marking contained in parentheses and separated by a "~" will appear on a device. If a line is indented then it is a continuation of the previous line and the two combined represent the entire Device Marking for that device.

(6) Lead/Ball Finish - Orderable Devices may have multiple material finish options. Finish options are separated by a vertical ruled line. Lead/Ball Finish values may wrap to two lines if the finish value exceeds the maximum column width.

Important Information and Disclaimer: The information provided on this page represents TI's knowledge and belief as of the date that it is provided. TI bases its knowledge and belief on information provided by third parties, and makes no representation or warranty as to the accuracy of such information. Efforts are underway to better integrate information from third parties. TI has taken and continues to take reasonable steps to provide representative and accurate information but may not have conducted destructive testing or chemical analysis on incoming materials and chemicals. TI and TI suppliers consider certain information to be proprietary, and thus CAS numbers and other limited information may not be available for release.

In no event shall TI's liability arising out of such information exceed the total purchase price of the TI part(s) at issue in this document sold by TI to Customer on an annual basis.

TAPE AND REEL INFORMATION

REEL DIMENSIONS

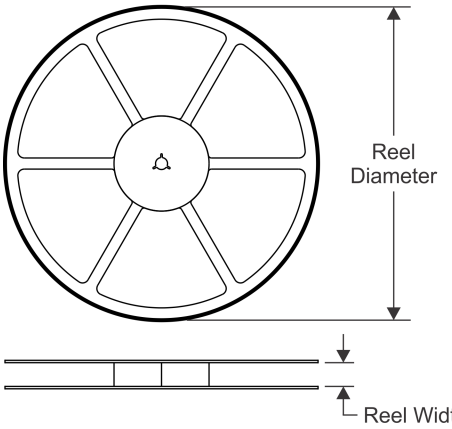

TAPE DIMENSIONS

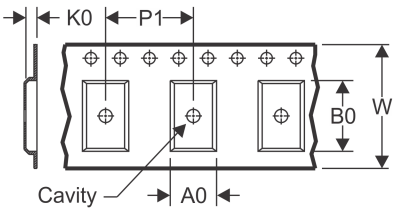

A0	Dimension designed to accommodate the component width
B0	Dimension designed to accommodate the component length
K0	Dimension designed to accommodate the component thickness
W	Overall width of the carrier tape
P1	Pitch between successive cavity centers

QUADRANT ASSIGNMENTS FOR PIN 1 ORIENTATION IN TAPE

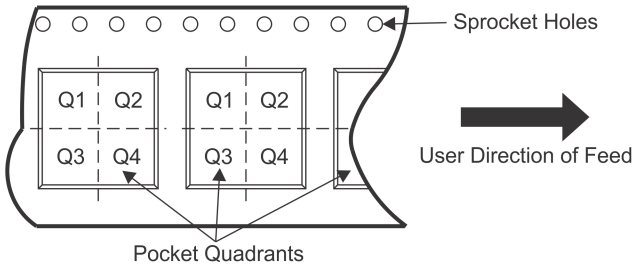

*All dimensions are nominal

Device	Package Type	Package Drawing	Pins	SPQ	Reel Diameter (mm)	Reel Width W1 (mm)	A0 (mm)	B0 (mm)	K0 (mm)	P1 (mm)	W (mm)	Pin1 Quadrant
ADS7804U/1K	SOIC	DW	28	1000	330.0	32.4	11.35	18.67	3.1	16.0	32.0	Q1

TAPE AND REEL BOX DIMENSIONS

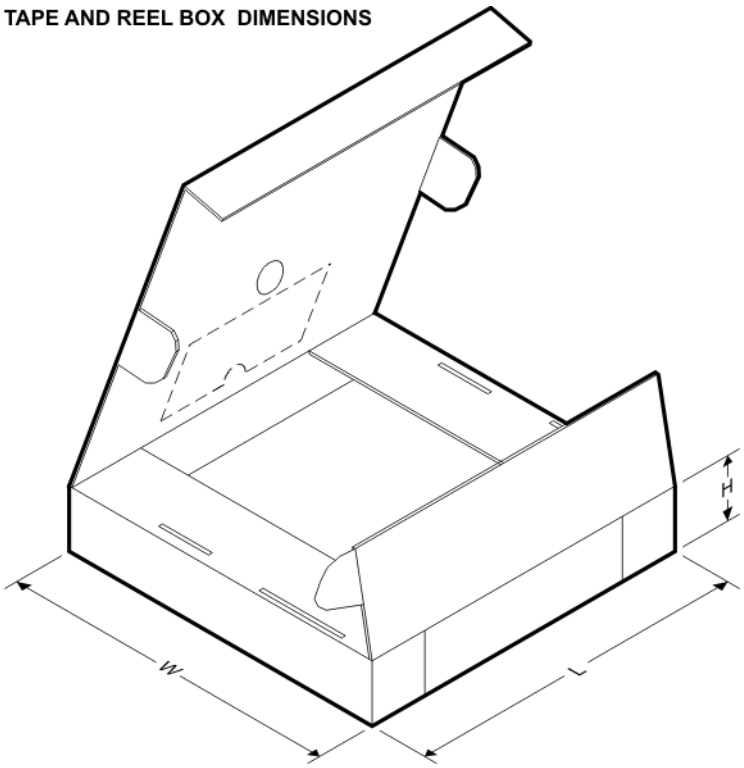

*All dimensions are nominal

Device	Package Type	Package Drawing	Pins	SPQ	Length (mm)	Width (mm)	Height (mm)
ADS7804U/1K	SOIC	DW	28	1000	367.0	367.0	55.0

DW (R–PDSO–G28) PLASTIC SMALL OUTLINE

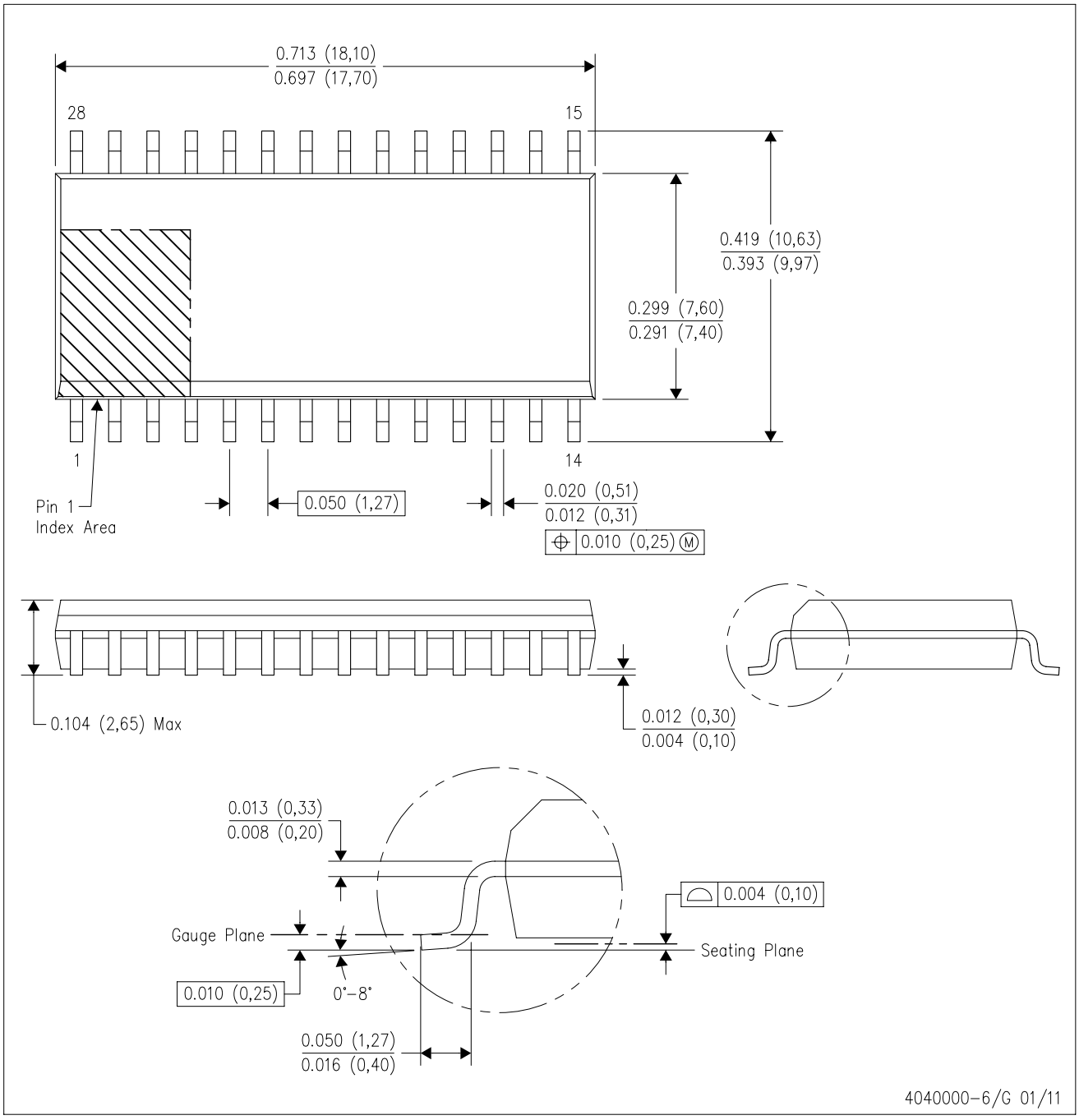

NOTES:
A. All linear dimensions are in inches (millimeters). Dimensioning and tolerancing per ASME Y14.5M–1994.
B. This drawing is subject to change without notice.
C. Body dimensions do not include mold flash or protrusion not to exceed 0.006 (0,15).
D. Falls within JEDEC MS–013 variation AE.

DW (R–PDSO–G28) PLASTIC SMALL OUTLINE

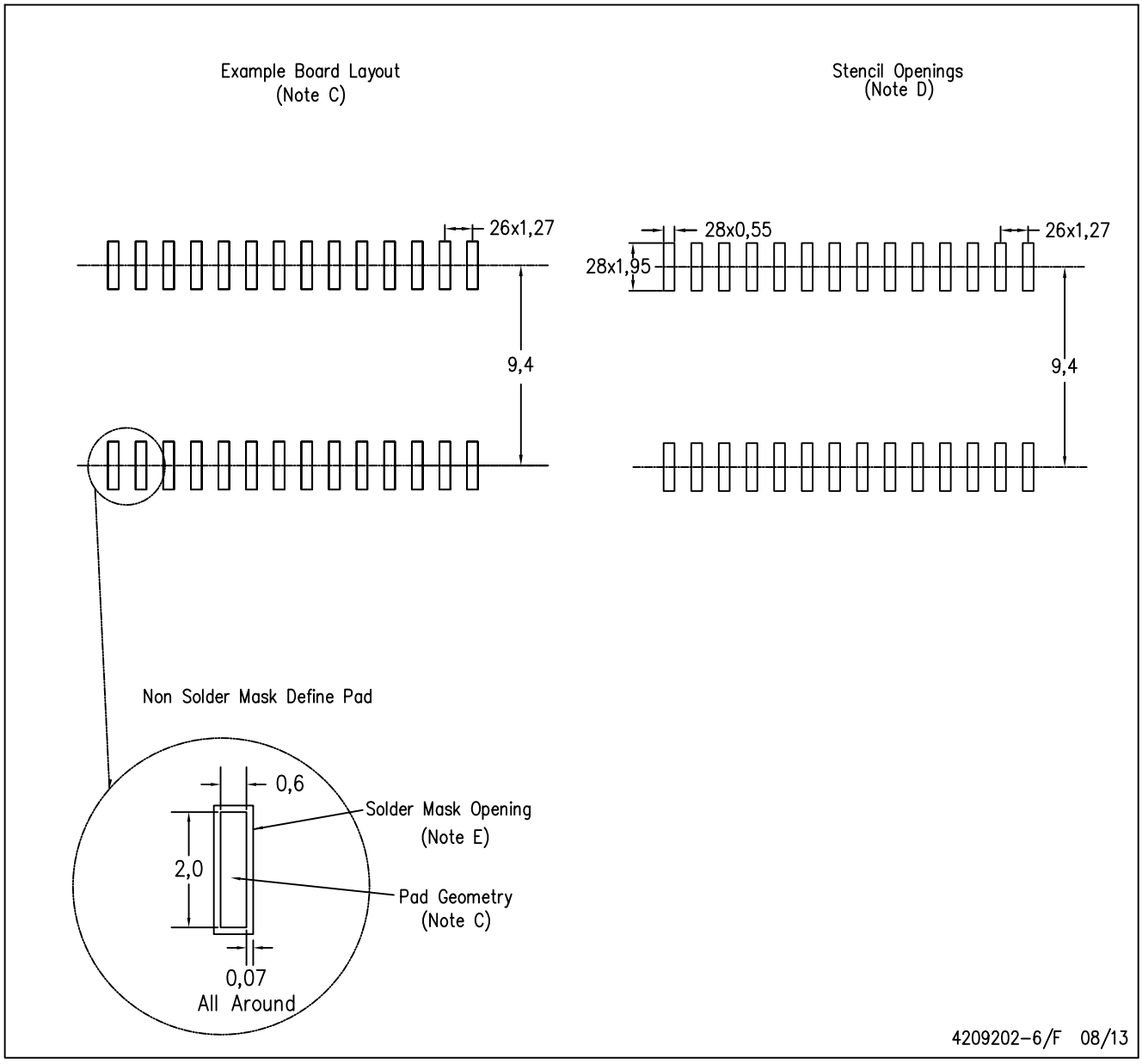

NOTES:
A. All linear dimensions are in millimeters.
B. This drawing is subject to change without notice.
C. Refer to IPC7351 for alternate board design.
D. Laser cutting apertures with trapezoidal walls and also rounding corners will offer better paste release. Customers should contact their board assembly site for stencil design recommendations. Refer to IPC–7525
E. Customers should contact their board fabrication site for solder mask tolerances between and around signal pads.

IMPORTANT NOTICE

Texas Instruments Incorporated and its subsidiaries (TI) reserve the right to make corrections, enhancements, improvements and other changes to its semiconductor products and services per JESD46, latest issue, and to discontinue any product or service per JESD48, latest issue. Buyers should obtain the latest relevant information before placing orders and should verify that such information is current and complete. All semiconductor products (also referred to herein as “components”) are sold subject to TI’s terms and conditions of sale supplied at the time of order acknowledgment.

TI warrants performance of its components to the specifications applicable at the time of sale, in accordance with the warranty in TI’s terms and conditions of sale of semiconductor products. Testing and other quality control techniques are used to the extent TI deems necessary to support this warranty. Except where mandated by applicable law, testing of all parameters of each component is not necessarily performed.

TI assumes no liability for applications assistance or the design of Buyers’ products. Buyers are responsible for their products and applications using TI components. To minimize the risks associated with Buyers’ products and applications, Buyers should provide adequate design and operating safeguards.

TI does not warrant or represent that any license, either express or implied, is granted under any patent right, copyright, mask work right, or other intellectual property right relating to any combination, machine, or process in which TI components or services are used. Information published by TI regarding third-party products or services does not constitute a license to use such products or services or a warranty or endorsement thereof. Use of such information may require a license from a third party under the patents or other intellectual property of the third party, or a license from TI under the patents or other intellectual property of TI.

Reproduction of significant portions of TI information in TI data books or data sheets is permissible only if reproduction is without alteration and is accompanied by all associated warranties, conditions, limitations, and notices. TI is not responsible or liable for such altered documentation. Information of third parties may be subject to additional restrictions.

Resale of TI components or services with statements different from or beyond the parameters stated by TI for that component or service voids all express and any implied warranties for the associated TI component or service and is an unfair and deceptive business practice. TI is not responsible or liable for any such statements.

Buyer acknowledges and agrees that it is solely responsible for compliance with all legal, regulatory and safety-related requirements concerning its products, and any use of TI components in its applications, notwithstanding any applications-related information or support that may be provided by TI. Buyer represents and agrees that it has all the necessary expertise to create and implement safeguards which anticipate dangerous consequences of failures, monitor failures and their consequences, lessen the likelihood of failures that might cause harm and take appropriate remedial actions. Buyer will fully indemnify TI and its representatives against any damages arising out of the use of any TI components in safety-critical applications.

In some cases, TI components may be promoted specifically to facilitate safety-related applications. With such components, TI’s goal is to help enable customers to design and create their own end-product solutions that meet applicable functional safety standards and requirements. Nonetheless, such components are subject to these terms.

No TI components are authorized for use in FDA Class III (or similar life-critical medical equipment) unless authorized officers of the parties have executed a special agreement specifically governing such use.

Only those TI components which TI has specifically designated as military grade or “enhanced plastic” are designed and intended for use in military/aerospace applications or environments. Buyer acknowledges and agrees that any military or aerospace use of TI components which have ***not*** been so designated is solely at the Buyer's risk, and that Buyer is solely responsible for compliance with all legal and regulatory requirements in connection with such use.

TI has specifically designated certain components as meeting ISO/TS16949 requirements, mainly for automotive use. In any case of use of non-designated products, TI will not be responsible for any failure to meet ISO/TS16949.

Products		**Applications**	
Audio	www.ti.com/audio	Automotive and Transportation	www.ti.com/automotive
Amplifiers	amplifier.ti.com	Communications and Telecom	www.ti.com/communications
Data Converters	dataconverter.ti.com	Computers and Peripherals	www.ti.com/computers
DLP® Products	www.dlp.com	Consumer Electronics	www.ti.com/consumer-apps
DSP	dsp.ti.com	Energy and Lighting	www.ti.com/energy
Clocks and Timers	www.ti.com/clocks	Industrial	www.ti.com/industrial
Interface	interface.ti.com	Medical	www.ti.com/medical
Logic	logic.ti.com	Security	www.ti.com/security
Power Mgmt	power.ti.com	Space, Avionics and Defense	www.ti.com/space-avionics-defense
Microcontrollers	microcontroller.ti.com	Video and Imaging	www.ti.com/video
RFID	www.ti-rfid.com		
OMAP Applications Processors	www.ti.com/omap	**TI E2E Community**	e2e.ti.com
Wireless Connectivity	www.ti.com/wirelessconnectivity		

Mailing Address: Texas Instruments, Post Office Box 655303, Dallas, Texas 75265
Copyright © 2015, Texas Instruments Incorporated