24-Bit, Wide Bandwidth Analog-to-Digital Converter

FEATURES

- 105kSPS Data Rate
- AC Performance:
  - 51kHz Bandwidth
  - 109dB SNR (High-Resolution Mode)
  - −105dB THD
- DC Accuracy:
  - 1.8μV/°C Offset Drift
  - 2ppm/°C Gain Drift
- Selectable Operating Modes:
  - High-Speed: 105kSPS Data Rate
  - High-Resolution: 109dB SNR
  - Low-Power: 35mW Dissipation
- Power-Down Control
- Digital Filter:
  - Linear Phase Response
  - Passband Ripple: ±0.005dB
  - Stop Band Attenuation: 100dB
- Internal Offset Calibration On Command
- Selectable SPI™ or Frame Sync Serial Interface
- Designed for Multichannel Systems:
  - Daisy-Chainable Serial Interface
  - Easy Synchronization
- Simple Pin-Driven Control
- Specified from −40°C to +105°C
- Analog Supply: 5V
- Digital Supply: 1.8V to 3.3V

APPLICATIONS

- Vibration/Modal Analysis
- Acoustics
- Dynamic Strain Gauges
- Pressure Sensors
- Test and Measurement

DESCRIPTION

The ADS1271 is a 24-bit, delta-sigma analog-to-digital converter (ADC) with a data rate up to 105kSPS. It offers a unique combination of excellent DC accuracy and outstanding AC performance. The high-order, chopper-stabilized modulator achieves very low drift with low in-band noise. The onboard decimation filter suppresses modulator and signal out-of-band noise. The ADS1271 provides a usable signal bandwidth up to 90% of the Nyquist rate with less than 0.005dB of ripple.

Traditionally, industrial delta-sigma ADCs offering good drift performance use digital filters with large passband droop. As a result, they have limited signal bandwidth and are mostly suited for DC measurements. High-resolution ADCs in audio applications offer larger usable bandwidths, but the offset and drift specification are significantly weaker than their industrial counterparts. The ADS1271 combines these converters, allowing high-precision industrial measurement with excellent DC and AC specifications ensured over an extended industrial temperature range.

Three operating modes allow for optimization of speed, resolution, and power. A selectable SPI or a frame-sync serial interface provides for convenient interfacing to microcontrollers or DSPs. All operations, including internal offset calibration, are controlled directly by pins; there are no registers to program.

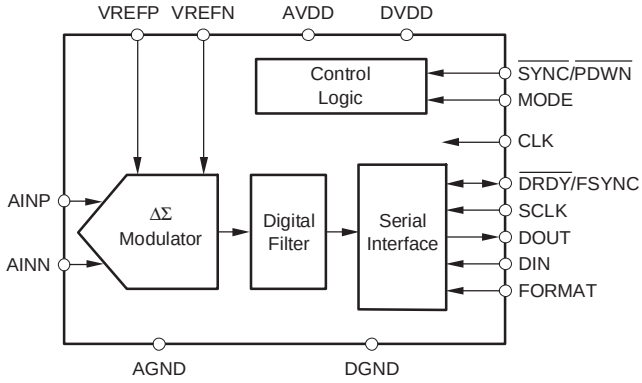

Please be aware that an important notice concerning availability, standard warranty, and use in critical applications of Texas Instruments semiconductor products and disclaimers thereto appears at the end of this data sheet.

All trademarks are the property of their respective owners.

PRODUCTION DATA information is current as of publication date. Products conform to specifications per the terms of Texas Instruments standard warranty. Production processing does not necessarily include testing of all parameters.

Copyright © 2004, Texas Instruments Incorporated

ABSOLUTE MAXIMUM RATINGS

over operating free-air temperature range unless otherwise noted(1)

	ADS1271	UNIT
AVDD to AGND	−0.3 to +6.0	V
DVDD to DGND	−0.3 to +3.6	V
AGND to DGND	−0.3 to +0.3	V
Input Current	100, Momentary	mA
	10, Continuous	mA
Analog Input to AGND	−0.3 to AVDD + 0.3	V
Digital Input or Output to DGND	−0.3 to DVDD + 0.3	V
Maximum Junction Temperature	+150	°C
Operating Temperature Range	−40 to +105	°C
Storage Temperature Range	−60 to +150	°C
Lead Temperature (soldering, 10s)	+300	°C

(1) Stresses above these ratings may cause permanent damage. Exposure to absolute maximum conditions for extended periods may degrade device reliability. These are stress ratings only, and functional operation of the device at these or any other conditions beyond those specified is not implied.

ORDERING INFORMATION

For the most current package and ordering information, see the Package Option Addendum located at the end of this data sheet, or refer to our web site at www.ti.com.



This integrated circuit can be damaged by ESD. Texas Instruments recommends that all integrated circuits be handled with appropriate precautions. Failure to observe proper handling and installation procedures can cause damage.

ESD damage can range from subtle performance degradation to complete device failure. Precision integrated circuits may be more susceptible to damage because very small parametric changes could cause the device not to meet its published specifications.

ELECTRICAL CHARACTERISTICS

All specifications at T_A = −40°C to +105°C, AVDD = +5V, DVDD = +1.8V, f_{CLK} = 27MHz, and V_{REF} = +2.5V, unless otherwise noted.

PARAMETER		TEST CONDITIONS	ADS1271 MIN	ADS1271 TYP	ADS1271 MAX	UNITS
Analog Inputs						
Full-scale input voltage (FSR)(1)		V_{IN} = (AINP – AINN)		±V_{REF}		V
Absolute input voltage		AINP or AINN to AGND	AGND – 0.1		AVDD + 0.1	V
Common-mode input voltage		V_{CM} = (AINP + AINN)/2		2.5		V
Differential input impedance	High-Speed mode			16.4		kΩ
	High-Resolution mode			16.4		kΩ
	Low-Power mode			32.8		kΩ
DC Performance						
Resolution		No missing codes	24			Bits
Data rate (f_{DATA})	High-Speed mode			105,469		SPS
	High-Resolution mode			52,734		SPS
	Low-Power mode			52,734		SPS
Integral nonlinearity (INL)		Differential input, V_{CM} = 2.5V		± 0.0006	± 0.0015	% of FSR(1)
Offset error	High-Speed mode	Without calibration		0.150	1	mV
		With calibration		On the level of the noise		
Offset drift				1.8		µV/°C
Gain error				0.1	0.5	%
Gain error drift				2		ppm/°C
Noise	High-Speed mode	Shorted input		9.0	20	µV, rms
	High-Resolution mode			6.5		µV, rms
	Low-Power mode			9.0		µV, rms
Common-mode rejection		f_{CM} = 60Hz	90	100		dB
Power-supply rejection	AVDD	f = 60Hz		80		dB
	DVDD			80		dB
AC Performance						
Signal-to-noise ratio (SNR) (2) (unweighted)	High-Speed mode		99	106		dB
	High-Resolution mode			109		dB
	Low-Power mode			106		dB
Total harmonic distortion (THD) (3)		V_{IN} = 1kHz, −0.5dBFS		−105	−95	dB
Spurious free dynamic range				−108		dB
Passband ripple					±0.005	dB
Passband				0.453 f_{DATA}		Hz
−3dB Bandwidth				0.49 f_{DATA}		Hz
Stop band attenuation			100			dB
Stop band	High-Speed mode		0.547 f_{DATA}		63.453 f_{DATA}	Hz
	High-Resolution mode		0.547 f_{DATA}		127.453 f_{DATA}	Hz
	Low-Power mode		0.547 f_{DATA}		63.453 f_{DATA}	Hz
Group delay	High-Speed and Low-Power modes			38/f_{DATA}		s
	High-Resolution mode			39/f_{DATA}		s
Settling time (latency)	High-Speed and Low-Power modes	Complete settling		76/f_{DATA}		s
	High-Resolution mode	Complete settling		78/f_{DATA}		s

(1) FSR = full-scale range = 2V_{REF}.
(2) Minimum SNR is ensured by the limit of the *DC noise* specification.
(3) THD includes the first nine harmonics of the input signals.
(4) MODE and FORMAT pins excluded.
(5) See the text for more details on SCLK.

ELECTRICAL CHARACTERISTICS (continued)

All specifications at T_A = −40°C to +105°C, AVDD = +5V, DVDD = +1.8V, f_{CLK} = 27MHz, and V_{REF} = +2.5V, unless otherwise noted.

PARAMETER		TEST CONDITIONS	ADS1271 MIN	ADS1271 TYP	ADS1271 MAX	UNITS
Voltage Reference Inputs						
Reference input Voltage (V_{REF})		V_{REF} = VREFP – VREFN	0.5	2.5	2.65	V
Negative reference input (VREFN)			AGND − 0.1		VREFP − 0.5	V
Positive reference input (VREFP)			VREFN + 0.5		AVDD + 0.1	V
Reference Input impedance	High-Speed mode			4.2		kΩ
	High-Resolution mode			4.2		kΩ
	Low-Power mode			8.4		kΩ
Digital Input/Output						
V_{IH}			0.7 DVDD		DVDD	V
V_{IL}			DGND		0.3 DVDD	V
V_{OH}		I_{OH} = 5mA	0.8 DVDD		DVDD	V
V_{OL}		I_{OL} = 5mA	DGND		0.2 DVDD	V
Input leakage(4)		0 < $V_{IN\ DIGITAL}$ < DVDD			±10	µA
Master clock rate (f_{CLK})			1		27	MHz
Serial clock rate (f_{SCLK})(5)	SPI format		24 f_{DATA}		f_{CLK}	MHz
	Frame-Sync format	High-Speed mode	64 f_{DATA}		64 f_{DATA}	MHz
		High-Resolution mode	128 f_{DATA}		128 f_{DATA}	MHz
		Low-Power mode	64 f_{DATA}		64 f_{DATA}	MHz
Power Supply						
AVDD			4.75	5	5.25	V
DVDD			1.65		3.6	V
AVDD current	High-Speed mode			17	25	mA
	High-Resolution mode			17	25	mA
	Low-Power mode			6.3	9.5	mA
	Power-Down mode	T ≤ 105°C		1	70	µA
		T ≤ 85°C		1	10	µA
DVDD current	High-Speed mode			3.5	6	mA
	High-Resolution mode			2.5	5	mA
	Low-Power mode			1.8	3.5	mA
	Power-Down mode	T ≤ 105°C, DVDD = 3.3V		1	70	µA
		T ≤ 85°C, DVDD = 3.3V		1	20	µA
Power dissipation	High-Speed mode			92	136	mW
	High-Resolution mode			90	134	mW
	Low-Power mode			35	54	mW
Temperature Range						
Specified			−40		+105	°C
Operating			−40		+105	°C
Storage			−60		+150	°C

(1) FSR = full-scale range = $2V_{REF}$.
(2) Minimum SNR is ensured by the limit of the *DC noise* specification.
(3) THD includes the first nine harmonics of the input signals.
(4) MODE and FORMAT pins excluded.
(5) See the text for more details on SCLK.

PIN ASSIGNMENTS

TSSOP (PW) PACKAGE
(TOP VIEW)

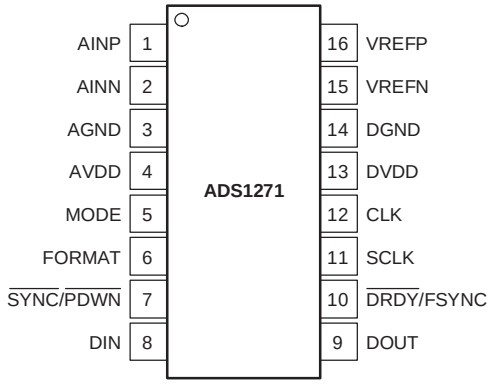

Terminal Functions

PIN NAME	PIN NO.	FUNCTION	DESCRIPTION
AINP	1	Analog Input	Positive analog input
AINN	2	Analog Input	Negative analog input
AGND	3	Analog Input	Analog ground
AVDD	4	Analog Input	Analog supply
MODE	5	Digital Input	MODE = 0: High-Speed mode MODE = float: High-Resolution mode MODE = 1: Low-Power mode
FORMAT	6	Digital Input	FORMAT = 0: SPI FORMAT = 1: Frame-Sync
$\overline{\text{SYNC}}$/$\overline{\text{PDWN}}$	7	Digital Input	Synchronize/Power-down input, active low
DIN	8	Digital Input	Data input for daisy-chain operation
DOUT	9	Digital Output	Data output
$\overline{\text{DRDY}}$/FSYNC	10	Digital Input/Output	If FORMAT = 0 (SPI), then pin 10 = $\overline{\text{DRDY}}$ output If FORMAT = 1 (Frame-Sync), then pin 10 = FSYNC input
SCLK	11	Digital Input	Serial clock for data retrieval
CLK	12	Digital Input	Master clock
DVDD	13	Digital Input	Digital supply
DGND	14	Digital Input	Digital ground
VREFN	15	Analog Input	Negative reference input
VREFP	16	Analog Input	Positive reference input

TIMING CHARACTERISTICS: SPI FORMAT

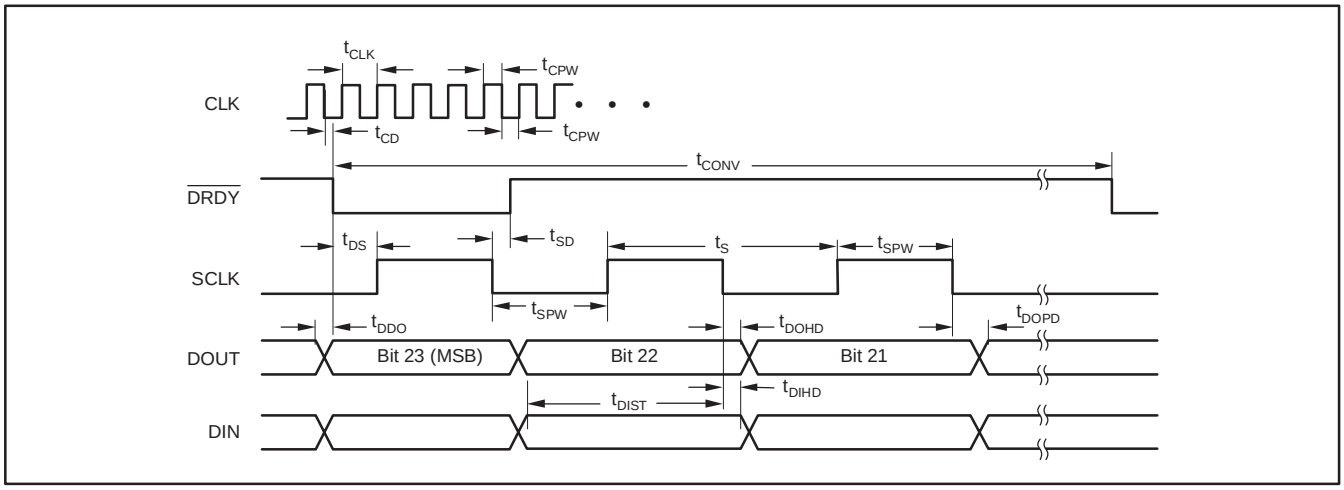

TIMING REQUIREMENTS: SPI FORMAT

For T_A = −40°C to +105°C and DVDD = 1.65V to 3.6V.

SYMBOL	PARAMETER		MIN	TYP	MAX	UNIT
t_{CLK}	CLK period ($1/f_{CLK}$)		37		1000	ns
t_{CPW}	CLK positive or negative pulse width		15			ns
t_{CONV}	Conversion period ($1/f_{DATA}$)	High-Speed mode		256		CLK periods
		High-Resolution mode		512		CLK periods
		Low-Power mode		512		CLK periods
t_{CD}(1)	Falling edge of CLK to falling edge of $\overline{DRDY}$			8		ns
t_{DS}(1)	Falling edge of $\overline{DRDY}$ to rising edge of first SCLK to retrieve data		5			ns
t_{DDO}(1)	Valid DOUT to falling edge of $\overline{DRDY}$		0			ns
t_{SD}(1)	Falling edge of SCLK to rising edge of $\overline{DRDY}$			8		ns
t_S	SCLK period		t_{CLK}			ns
t_{SPW}	SCLK positive or negative pulse width		12			ns
t_{DOHD}(1)	SCLK falling edge to old DOUT invalid (hold time)		5			ns
t_{DOPD}(1)	SCLK falling edge to new DOUT valid (propagation delay)				12	ns
t_{DIST}	New DIN valid to falling edge of SCLK (setup time)		6			ns
t_{DIHD}	Old DIN valid to falling edge of SCLK (hold time)		6			ns

(1) Load on $\overline{DRDY}$ and DOUT = 20pF.

TIMING CHARACTERISTICS: FRAME-SYNC FORMAT

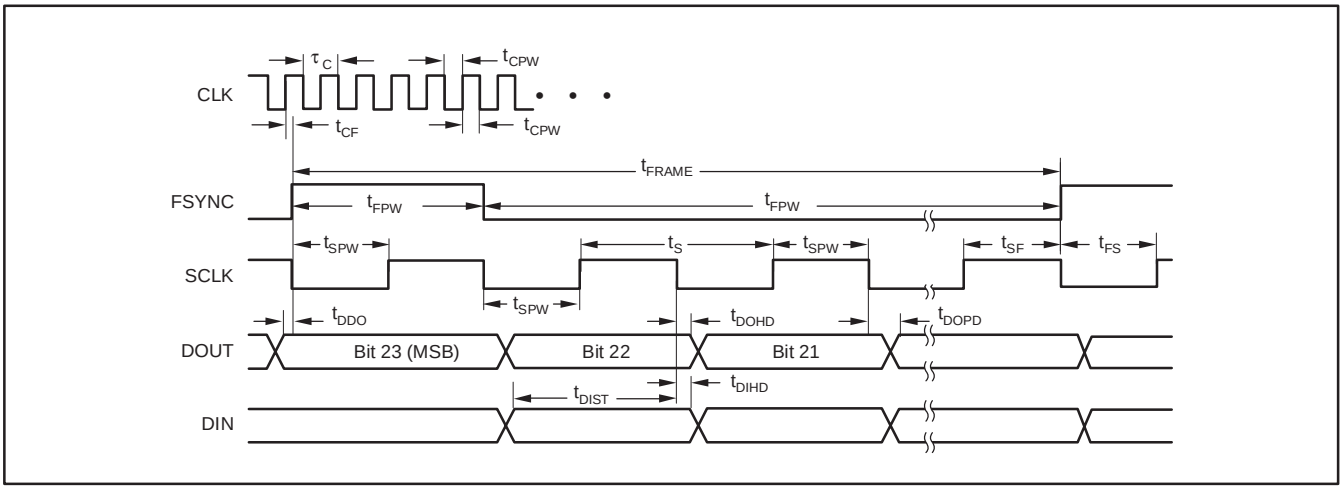

TIMING REQUIREMENTS: FRAME-SYNC FORMAT

for T_A = −40°C to +105°C and DVDD = 1.65V to 3.6V.

SYMBOL	PARAMETER		MIN	TYP	MAX	UNIT
t_{CLK}	CLK period ($1/f_{CLK}$)		37		1000	ns
t_{CPW}	CLK positive or negative pulse width		15			ns
t_{CS}	Rising edge of CLK to falling edge of SCLK		−2		8	ns
t_{FRAME}	Frame period ($1/f_{DATA}$)	High-Speed mode		256		CLK periods
		High-Resolution mode		256 or 512(1)		CLK periods
		Low-Power mode		256 or 512(1)		CLK periods
t_{FPW}	FSYNC positive or negative pulse width		1			SCLK periods
t_{FS}	Rising edge of FSYNC to rising edge of SCLK		5			ns
t_{SF}	Rising edge of SCLK to rising edge of FSYNC		5			ns
τ_S	SCLK period (SCLK must be continuously running)	High-Speed mode		$\tau_{FRAME}/64$		τ_{FRAME} periods
		High-Resolution mode		$\tau_{FRAME}/128$		τ_{FRAME} periods
		Low-Power mode		$\tau_{FRAME}/64$		τ_{FRAME} periods
t_{SPW}	SCLK positive or negative pulse width		$0.4\tau_{SCLK}$		$0.6\tau_{SCLK}$	ns
t_{DOHD}(2)	SCLK falling edge to old DOUT invalid (hold time)		5			ns
t_{DOPD}(2)	SCLK falling edge to new DOUT valid (propagation delay)				12	ns
t_{DDO}(2)	Valid DOUT to falling edge of FSYNC		0			ns
t_{DIST}	New DIN valid to falling edge of SCLK (setup time)		6			ns
t_{DIHD}	Old DIN valid to falling edge of SCLK (hold time)		6			ns

(1) The ADS1271 automatically detects either frame period.
(2) Load on DOUT = 20pF.

TYPICAL CHARACTERISTICS

T_A = 25°C, AVDD = 5V, DVDD = 1.8V, f_{CLK} = 27MHz, and V_{REF} = 2.5V, unless otherwise noted.

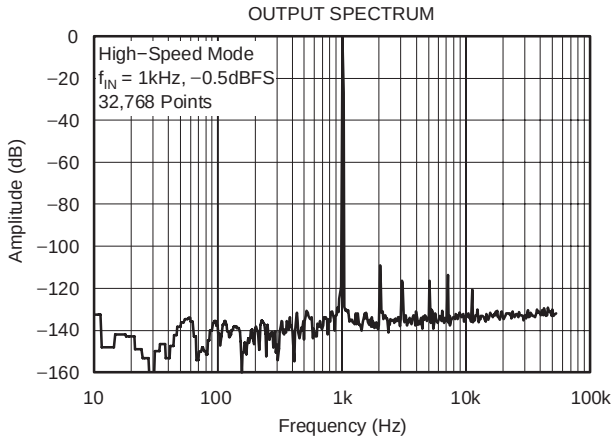

Figure 1

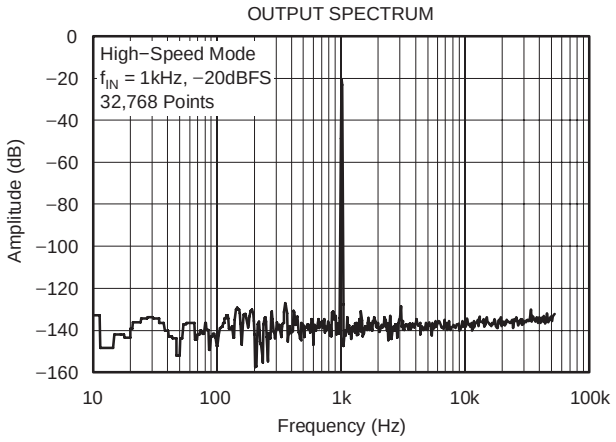

Figure 2

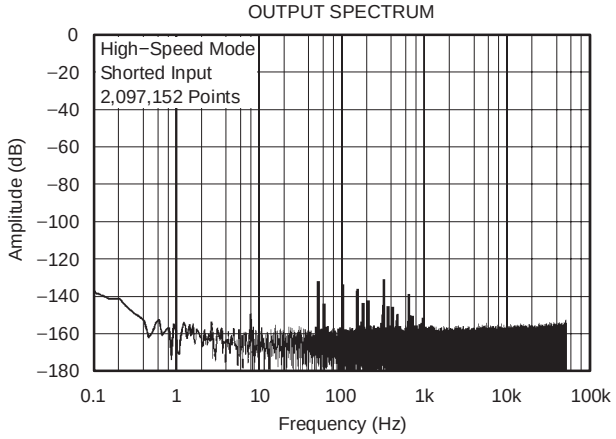

Figure 3

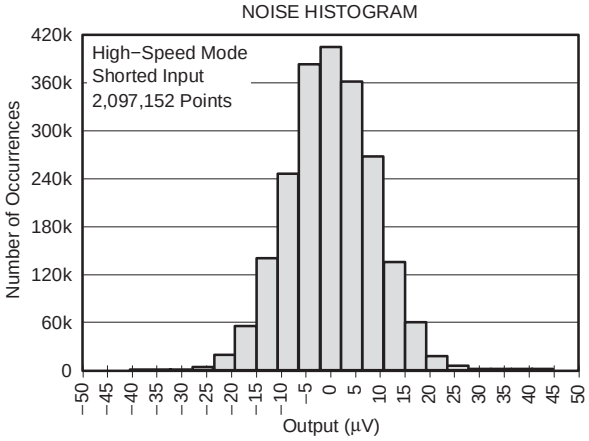

Figure 4

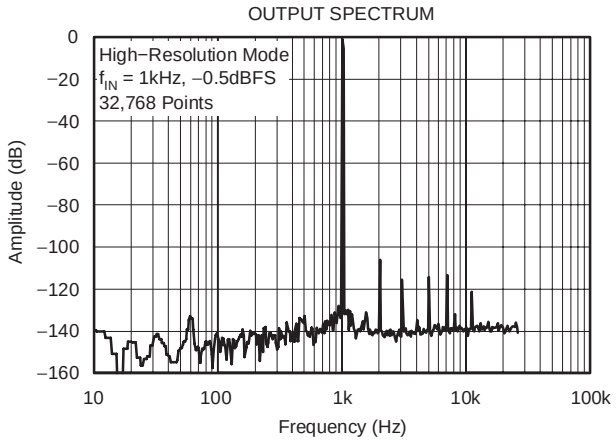

Figure 5

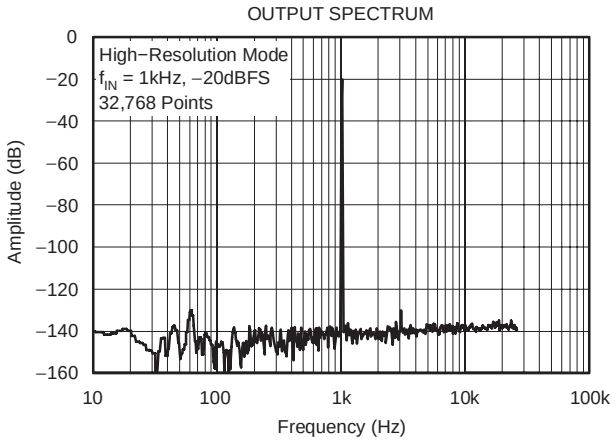

Figure 6

TYPICAL CHARACTERISTICS (continued)

T_A = 25°C, AVDD = 5V, DVDD = 1.8V, f_{CLK} = 27MHz, and V_{REF} = 2.5V, unless otherwise noted.

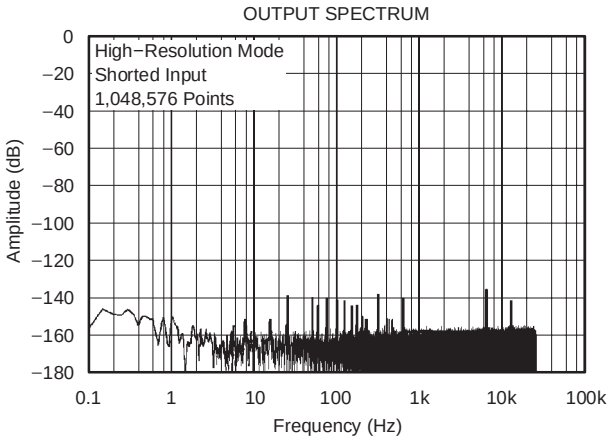

Figure 7

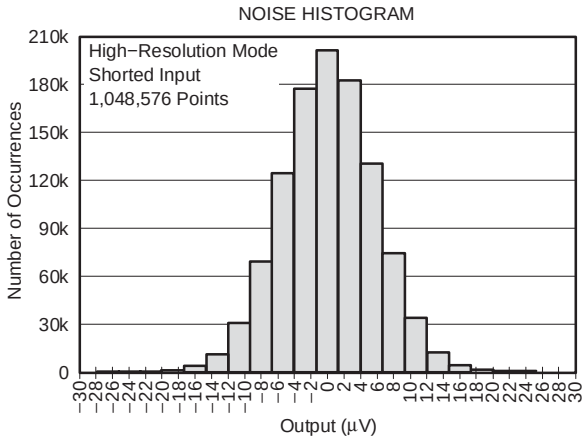

Figure 8

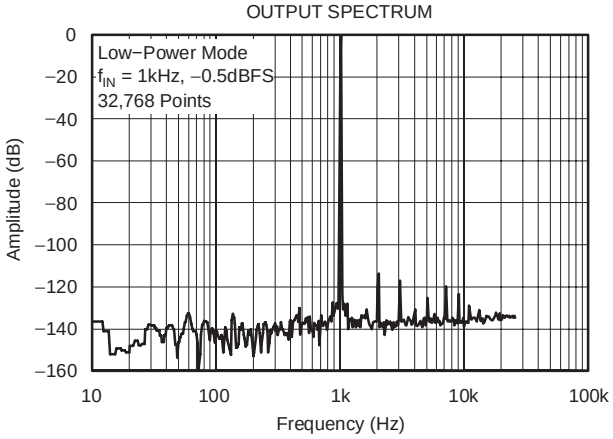

Figure 9

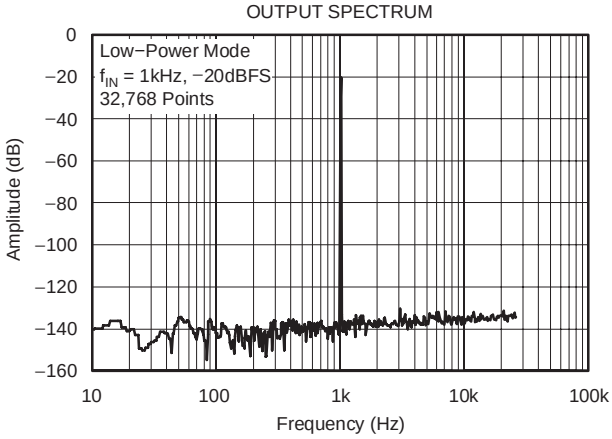

Figure 10

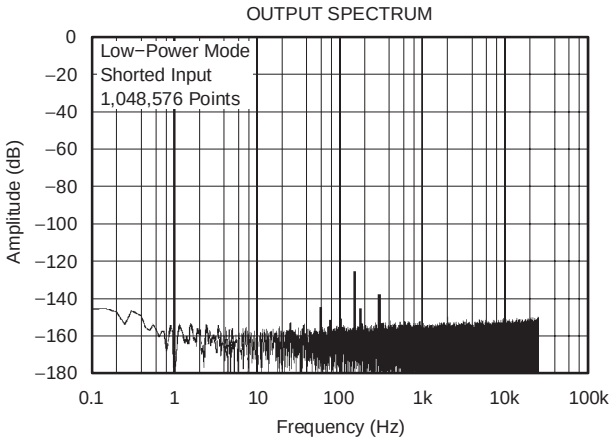

Figure 11

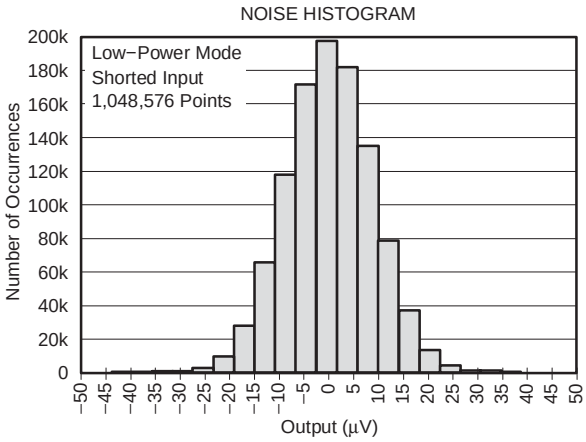

Figure 12

TYPICAL CHARACTERISTICS (continued)

T_A = 25°C, AVDD = 5V, DVDD = 1.8V, f_{CLK} = 27MHz, and V_{REF} = 2.5V, unless otherwise noted.

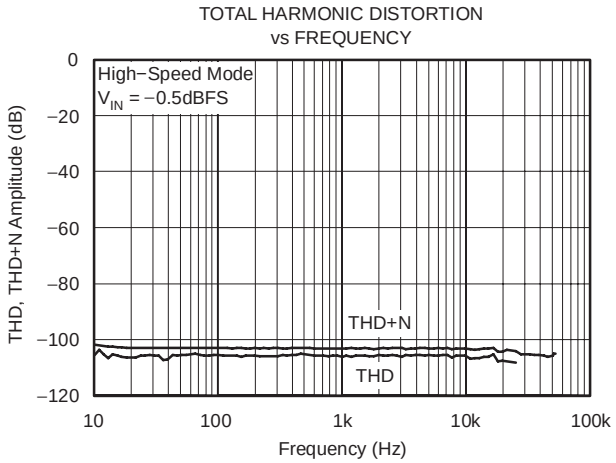

Figure 13

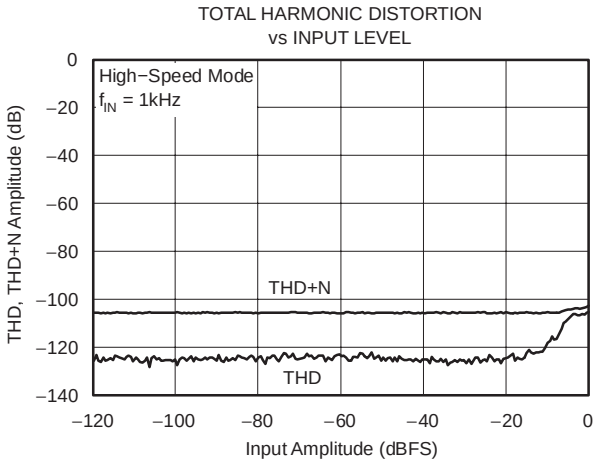

Figure 14

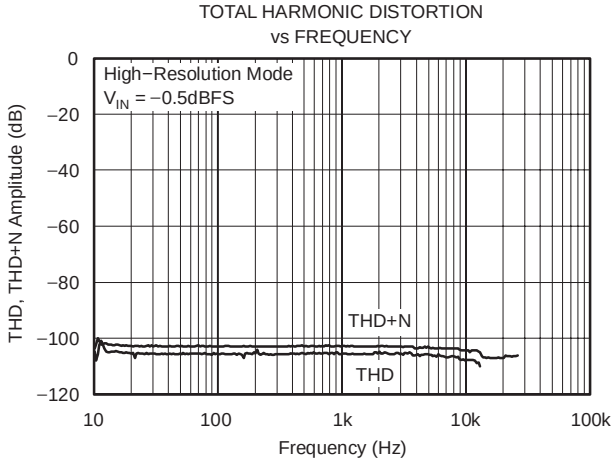

Figure 15

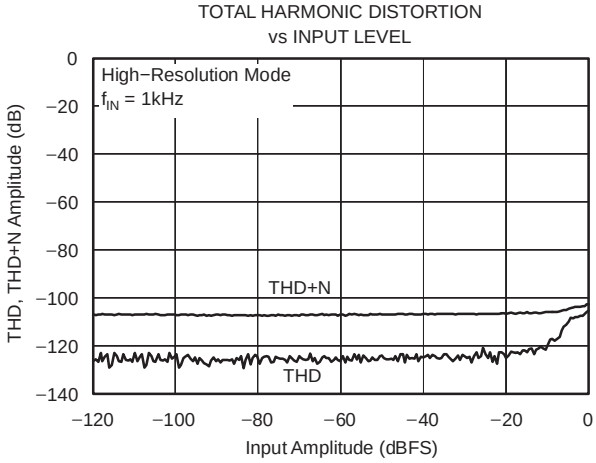

Figure 16

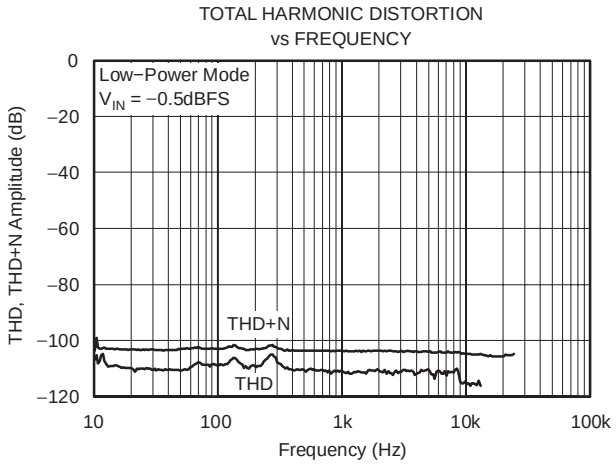

Figure 17

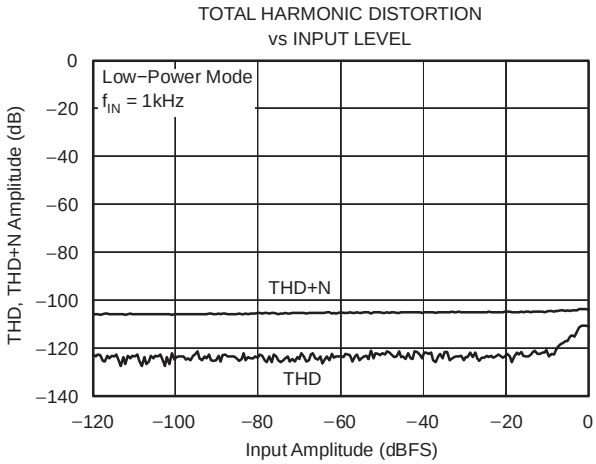

Figure 18

TYPICAL CHARACTERISTICS (continued)

T_A = 25°C, AVDD = 5V, DVDD = 1.8V, f_{CLK} = 27MHz, and V_{REF} = 2.5V, unless otherwise noted.

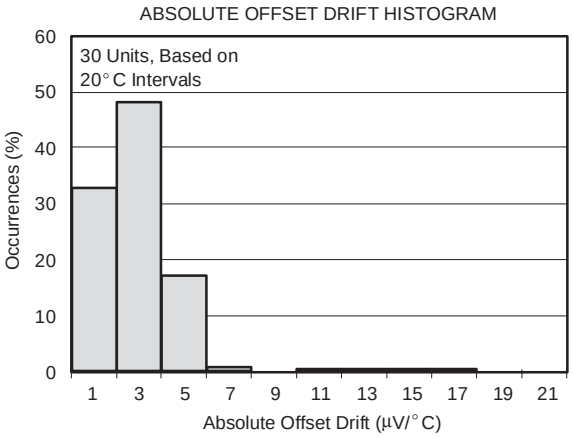

Figure 19

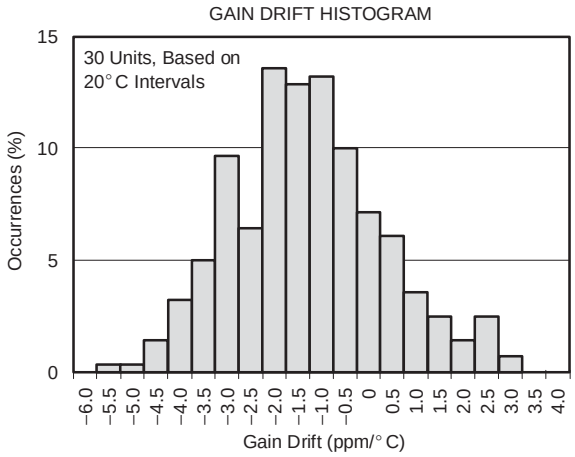

Figure 20

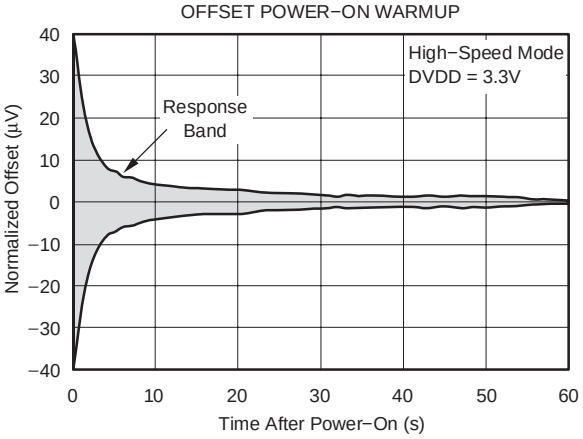

Figure 21

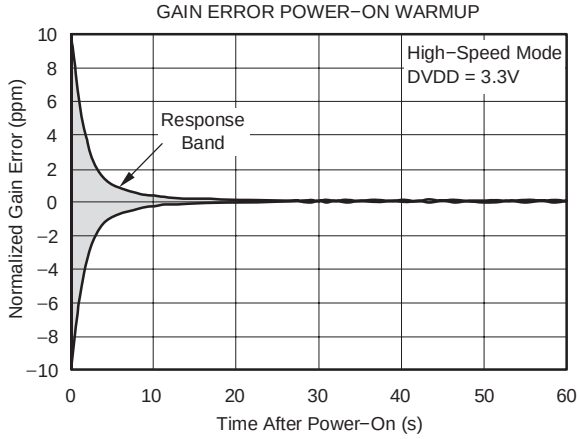

Figure 22

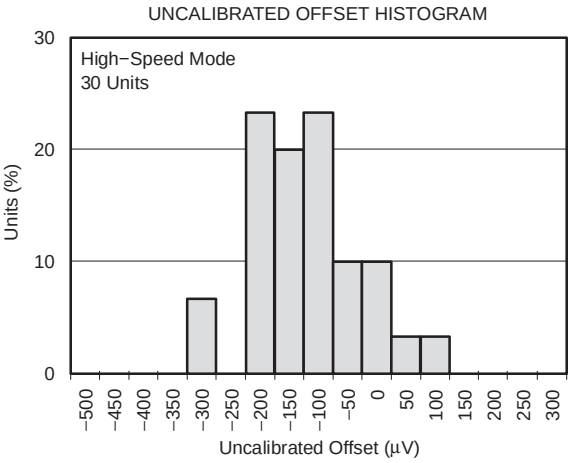

Figure 23

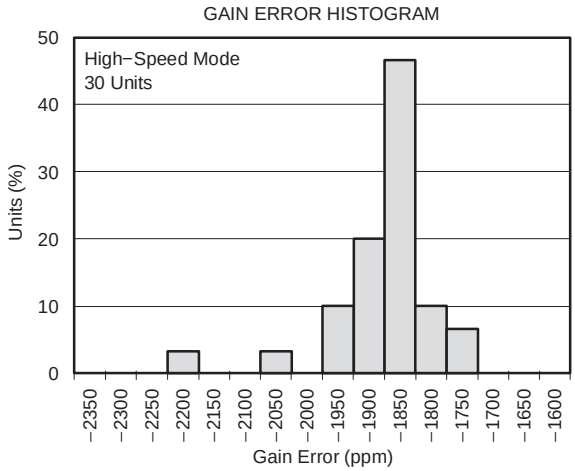

Figure 24

TYPICAL CHARACTERISTICS (continued)

T_A = 25°C, AVDD = 5V, DVDD = 1.8V, f_{CLK} = 27MHz, and V_{REF} = 2.5V, unless otherwise noted.

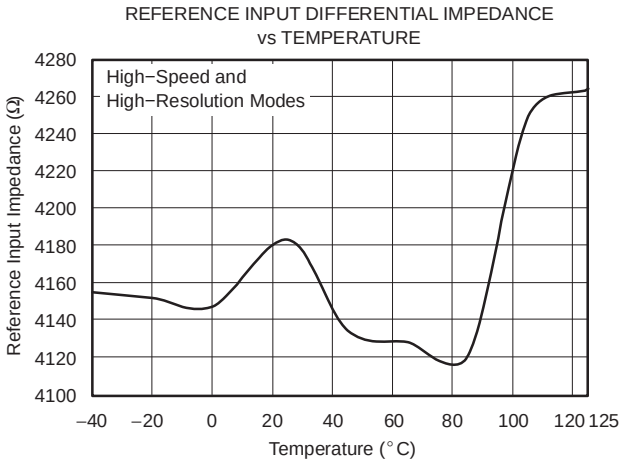

Figure 25

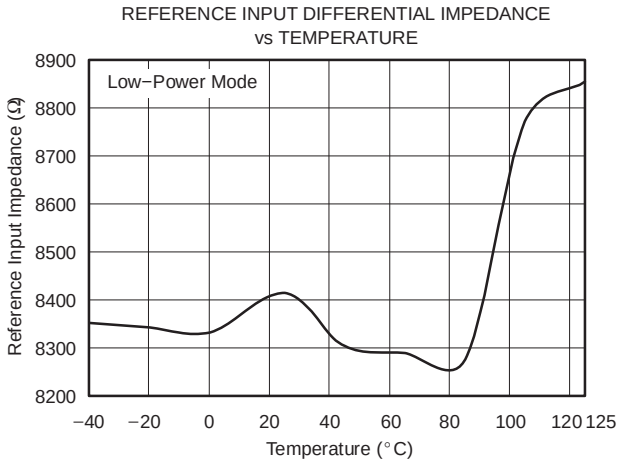

Figure 26

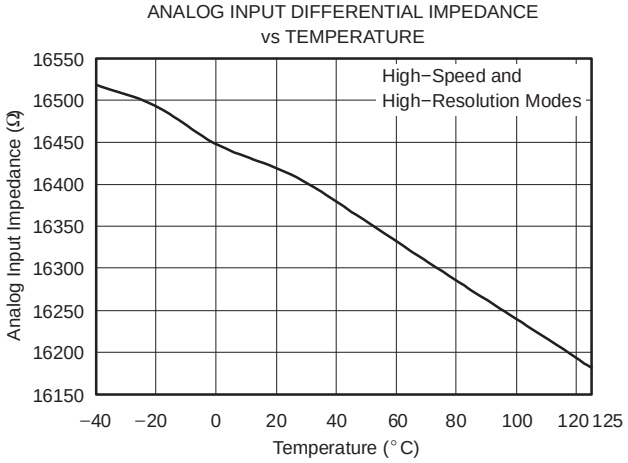

Figure 27

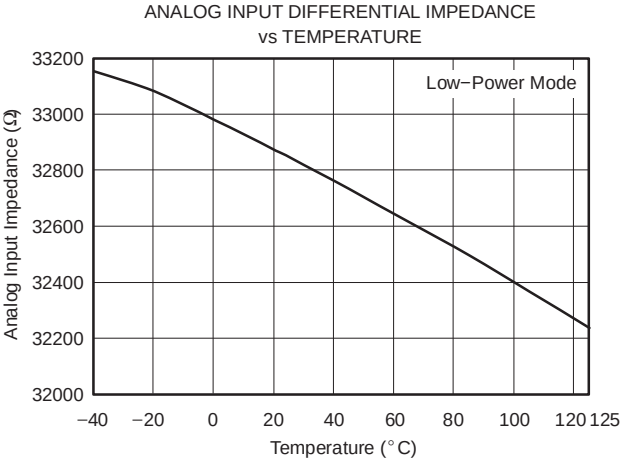

Figure 28

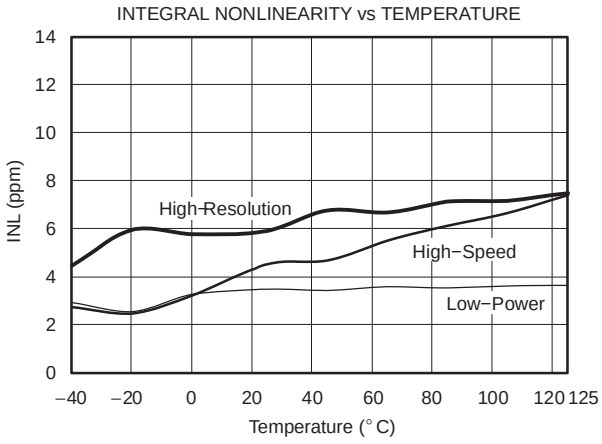

Figure 29

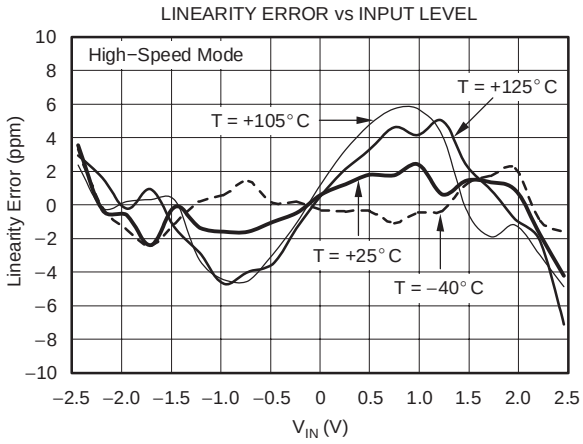

Figure 30

TYPICAL CHARACTERISTICS (continued)

T_A = 25°C, AVDD = 5V, DVDD = 1.8V, f_{CLK} = 27MHz, and V_{REF} = 2.5V, unless otherwise noted.

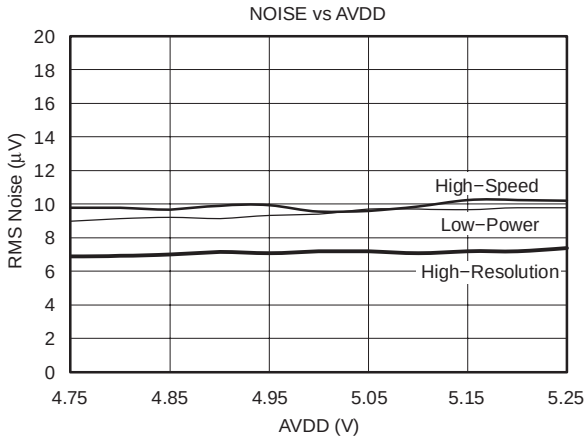

Figure 31

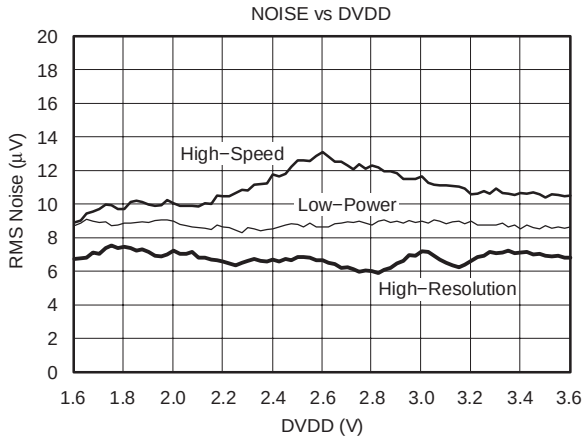

Figure 32

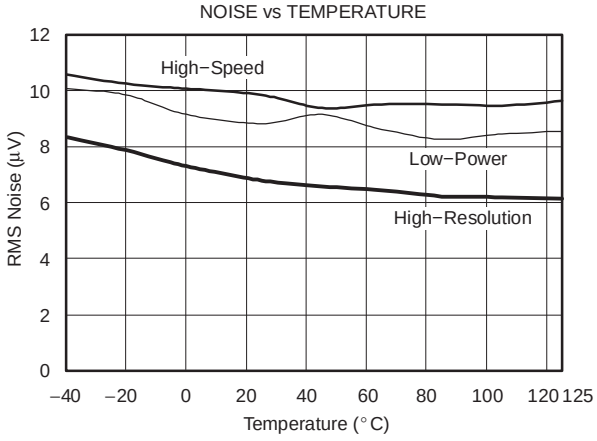

Figure 33

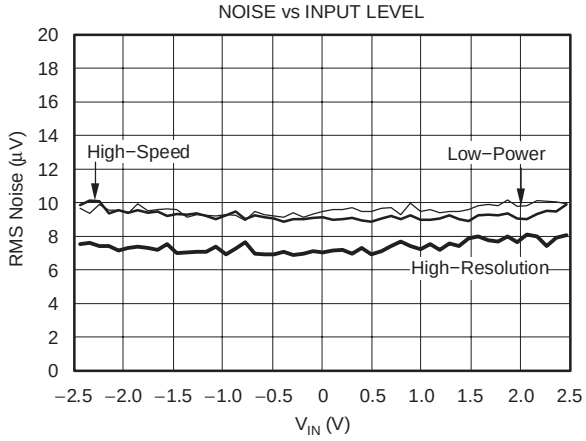

Figure 34

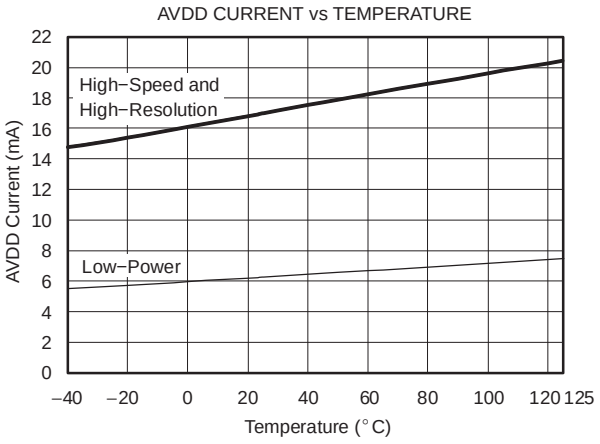

Figure 35

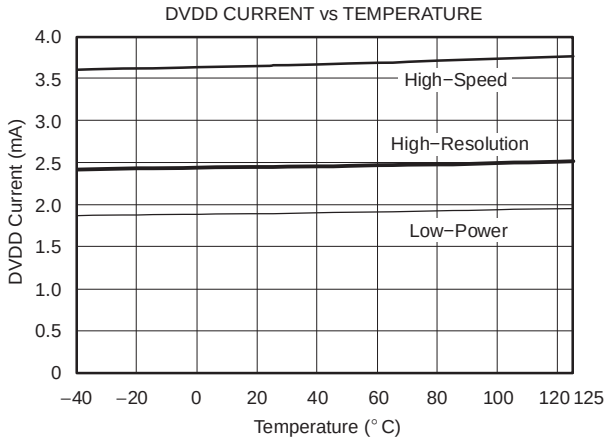

Figure 36

OVERVIEW

The ADS1271 is a 24-bit, delta-sigma ADC. It offers the combination of outstanding DC accuracy and superior AC performance. Figure 37 shows the block diagram for the ADS1271. The ADS1271 converter is comprised of an advanced, 6th-order, chopper-stabilized, delta-sigma modulator followed by a low-ripple, linear phase FIR filter. The modulator measures the differential input signal, V_{IN} = (AINP – AINN), against the differential reference, V_{REF} = (VREFP – VREFN). The digital filter receives the modulator signal and provides a low-noise digital output. To allow tradeoffs among speed, resolution, and power, three modes of operation are supported on the ADS1271: High-Speed, High-Resolution, and Low-Power. Table 1 summarizes the performance of each mode. In High-Speed mode, the data rate is 105kSPS; in High-Resolution mode, the SNR = 109dB; and in Low-Power mode, the power dissipation is only 35mW.

The ADS1271 is configured by simply setting the appropriate IO pins—there are no registers to program. Data is retrieved over a serial interface that supports both SPI and Frame-Sync formats. The ADS1271 has a daisy-chainable output and the ability to synchronize externally, so it can be used conveniently in multichannel systems.

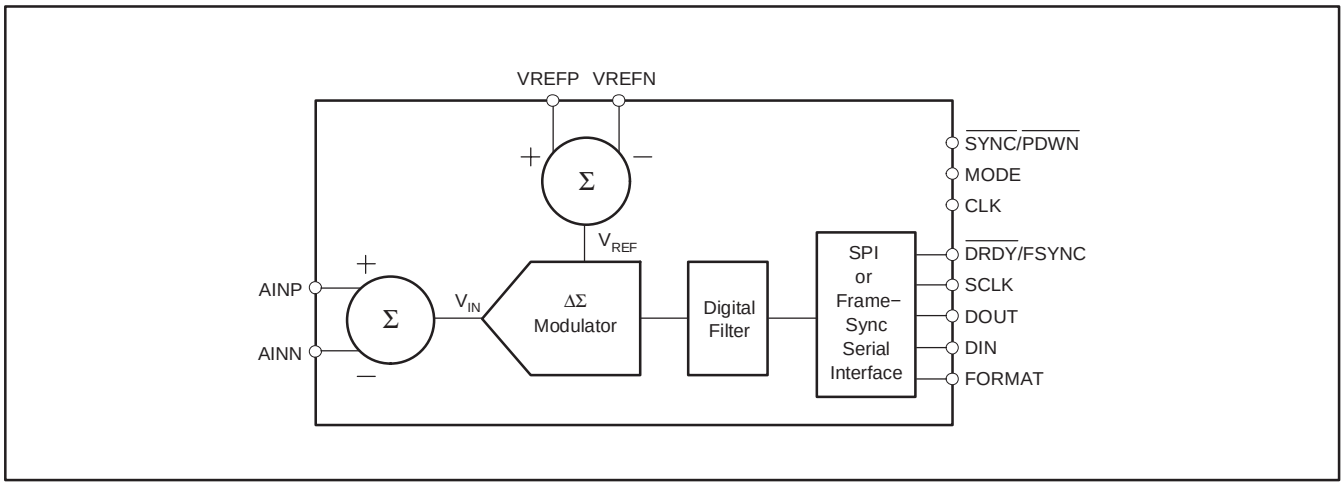

Figure 37. Block Diagram

Table 1. Operating Mode Performance Summary

MODE	DATA RATE (SPS)	PASSBAND (Hz)	SNR (dB)	NOISE (μV_{RMS})	POWER (mW)
High-Speed	105,469	47,777	106	9.0	92
High-Resolution	52,734	23,889	109	6.5	90
Low-Power	52,734	23,889	106	9.0	35

ANALOG INPUTS (AINP, AINN)

The ADS1271 measures the differential input signal V_{IN} = (AINP – AINN) against the differential reference V_{REF} = (VREFP – VREFN). The most positive measurable differential input is $+V_{REF}$, which produces the most positive digital output code of 7FFFFFh. Likewise, the most negative measurable differential input is $-V_{REF}$, which produces the most negative digital output code of 800000h.

While the ADS1271 measures the differential input signal, the absolute input voltage is also important. This is the voltage on either input (AINP or AINN) with respect to AGND. The range for this voltage is:

$$-0.1V < (AINN \text{ or } AINP) < AVDD + 0.1V$$

If either input is taken below –0.1V or above (AVDD + 0.1), ESD protection diodes on the inputs may turn on.

The ADS1271 uses switched-capacitor circuitry to measure the input voltage. Internal capacitors are charged by the inputs and then discharged. Figure 38 shows a conceptual diagram of these circuits. Switch S2 represents the net effect of the modulator circuitry in discharging the sampling capacitor; the actual implementation is different. The timing for switches S1 and S2 is shown in Figure 39. The sampling time (t_{SAMPLE}) is the inverse of modulator sampling frequency (f_{MOD}) and is a function of the mode, format, and frequency of CLK, as shown in Table 2. When using the Frame-Sync format with High-Resolution or Low-Power modes, the ratio between f_{MOD} and f_{CLK} depends on the frame period that is set by the FSYNC input.

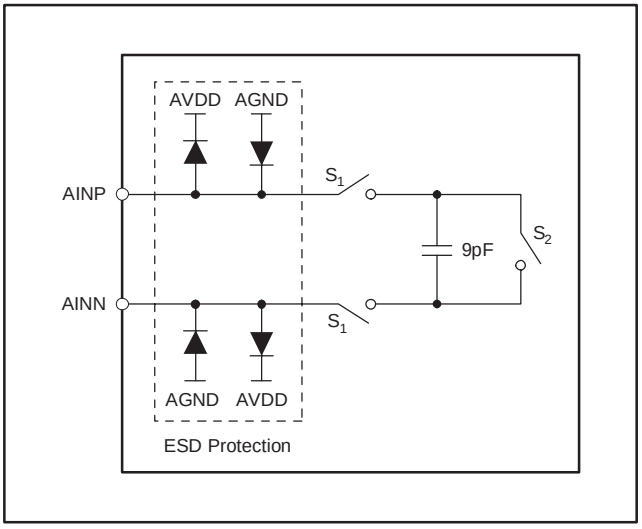

Figure 38. Equivalent Analog Input Circuitry

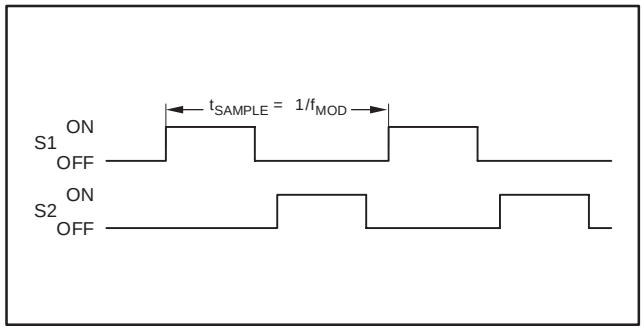

Figure 39. S1 and S2 Switch Timing for Figure 38

Table 2. Modulator Frequency for the Different Mode and Format Settings

MODE	INTERFACE FORMAT	f_{MOD}
High-Speed	SPI or Frame-Sync	$f_{CLK}/4$
High-Resolution	SPI	$f_{CLK}/4$
	Frame-Sync	$f_{CLK}/4$ or $f_{CLK}/2$
Low-Power	SPI	$f_{CLK}/8$
	Frame-Sync	$f_{CLK}/8$ or $f_{CLK}/4$

The average load presented by the switched capacitor input can be modeled with an effective differential impedance, as shown in Figure 40. Note that the effective impedance is a function of f_{MOD}.

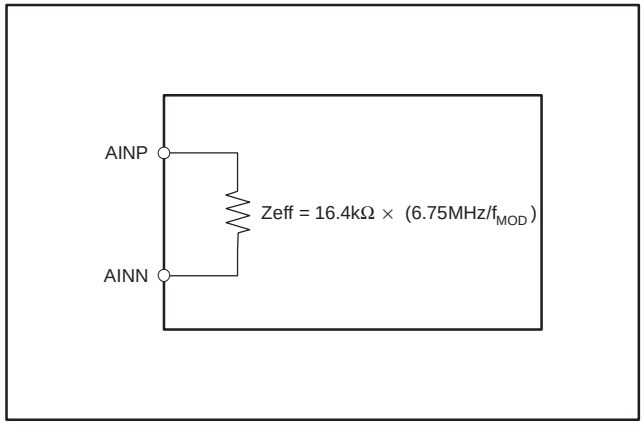

Figure 40. Effective Input Impedances

The ADS1271 is a very high-performance ADC. For optimum performance, it is critical that the appropriate circuitry be used to drive the ADS1271 inputs. See the ***Application Information*** section for the recommended circuits.

VOLTAGE REFERENCE INPUTS (VREFP, VREFN)

The voltage reference for the ADS1271 ADC is the differential voltage between VREFP and VREFN: V_{REF} = (VREFP−VREFN). The reference inputs use a structure similar to that of the analog inputs with the equivalent circuitry on the reference inputs shown in Figure 41. As with the analog inputs, the load presented by the switched capacitor can be modeled with an effective impedance, as shown in Figure 42.

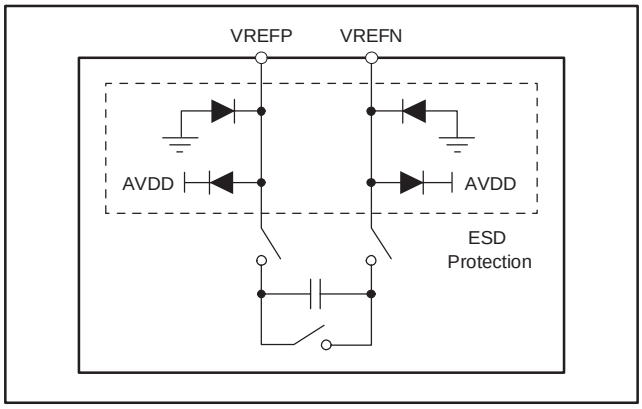

Figure 41. Equivalent Reference Input Circuitry

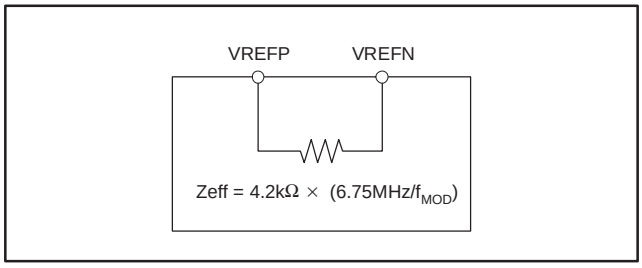

Figure 42. Effective Reference Impedance

ESD diodes protect the reference inputs. To keep these diodes from turning on, make sure the voltages on the reference pins do not go below AGND by more than 0.1V, and likewise do not exceed AVDD by 0.1V:

$$-0.1V < (VREFP \text{ or } VREFN) < AVDD + 0.1V$$

A high-quality reference voltage with the appropriate drive strength is essential for achieving the best performance from the ADS1271. Noise and drift on the reference degrade overall system performance. See the ***Application Information*** section for example reference circuits.

CLOCK INPUT (CLK)

The ADS1271 requires an external clock signal to be applied to the CLK input pin. As with any high-speed data converter, a high-quality, low-jitter clock is essential for optimum performance. Crystal clock oscillators are the recommended clock source. Make sure to avoid excess ringing on the clock input; keeping the clock trace as short as possible using a 47Ω series resistor will help.

The ratio between the clock frequency and output data rate is a function of the mode and format. Table 3 shows the ratios when the SPI format is selected. Also included in this table is the typical CLK frequency and the corresponding data rate. When High-Speed mode is used, each conversion takes 256 CLK periods. When High-Resolution or Low-Power modes are selected, the conversions take 512 CLK periods.

Table 4 shows the ratios when the Frame-Sync format is selected. When using the Frame-Sync format in either High-Resolution or Low-Power mode, the f_{CLK}/f_{DATA} ratio can be 256 or 512. The ADS1271 automatically detects which ratio is being used. Using a ratio of 512 allows the CLK frequency to be reduced by a factor of two while maintaining the same data rate. The output data rate scales with the clock frequency. See the ***Serial Interface*** section for more details on the Frame-Sync operation.

Table 3. Clock Ratios for SPI Format

MODE SELECTION	f_{CLK}/f_{DATA}	TYPICAL f_{CLK} (MHz)	→	CORRESPONDING DATA RATE (SPS)
High-Speed	256	27	→	105,469
High-Resolution	512	27	→	52,734
Low-Power	512	27	→	52,734

Table 4. Clock Ratios for Frame-Sync Format

MODE SELECTION	f_{CLK}/f_{FRAME}	TYPICAL f_{CLK} (MHz)	→	CORRESPONDING DATA RATE (SPS)
High-Speed	256	27	→	105,469
High-Resolution	256	13.5	→	52,734
	512	27	→	52,734
Low-Power	256	13.5	→	52,734
	512	27	→	52,734

MODE SELECTION (MODE)

The ADS1271 supports three modes of operation: High-Speed, High-Resolution, and Low-Power. The mode selection is determined by the status of the digital input MODE pin, as shown in Table 5. A high impedance, or *floating,* condition allows the MODE pin to support a third state. The ADS1271 constantly monitors the status of the MODE pin during operation and responds to a change in status after 12,288 CLK periods. When floating the MODE pin, keep the total capacitance on the pin less than 100pF and the resistive loading greater than 10MΩ to ensure proper operation. Changing the mode clears the internal offset calibration value. If onboard offset calibration is being used, be sure to recalibrate after a mode change.

When daisy-chaining multiple ADS1271s together and operating in High-Resolution mode (MODE pin floating), the MODE pin of each device must be isolated from one another; this ensures proper device operation. The MODE pins can be tied together for High-Speed and Low-Power modes.

Table 5. Mode Selection

MODE PIN STATUS	MODE SELECTION
Logic Low (DGND)	High-Speed
Floating(1)	High-Resolution
Logic High (DVDD)	Low-Power

(1) Load on MODE: C < 100pF, R > 10MΩ

When using the SPI format, $\overline{\text{DRDY}}$ is held high after a mode change occurs until settled (or valid) data is ready, as shown in Figure 43.

In Frame-Sync format, the DOUT pin is held low after a mode change occurs until settled data is ready, as shown in Figure 43. Data can be read from the device to detect when DOUT changes to logic 1, indicating valid data.

FORMAT SELECTION (FORMAT)

To help connect easily to either microcontrollers or DSPs, the ADS1271 supports two formats for the serial interface: an SPI-compatible interface and a Frame-Sync interface. The format is selected by the FORMAT pin, as shown in Table 6. It is recommended that the FORMAT pin be directly tied to the appropriate voltage. If the status of this pin changes, perform a Sync operation afterwards to ensure proper operation.

Table 6. Format Selection

FORMAT PIN STATUS	SERIAL INTERFACE FORMAT
Logic Low (DGND)	SPI
Logic High (DVDD)	Frame-Sync

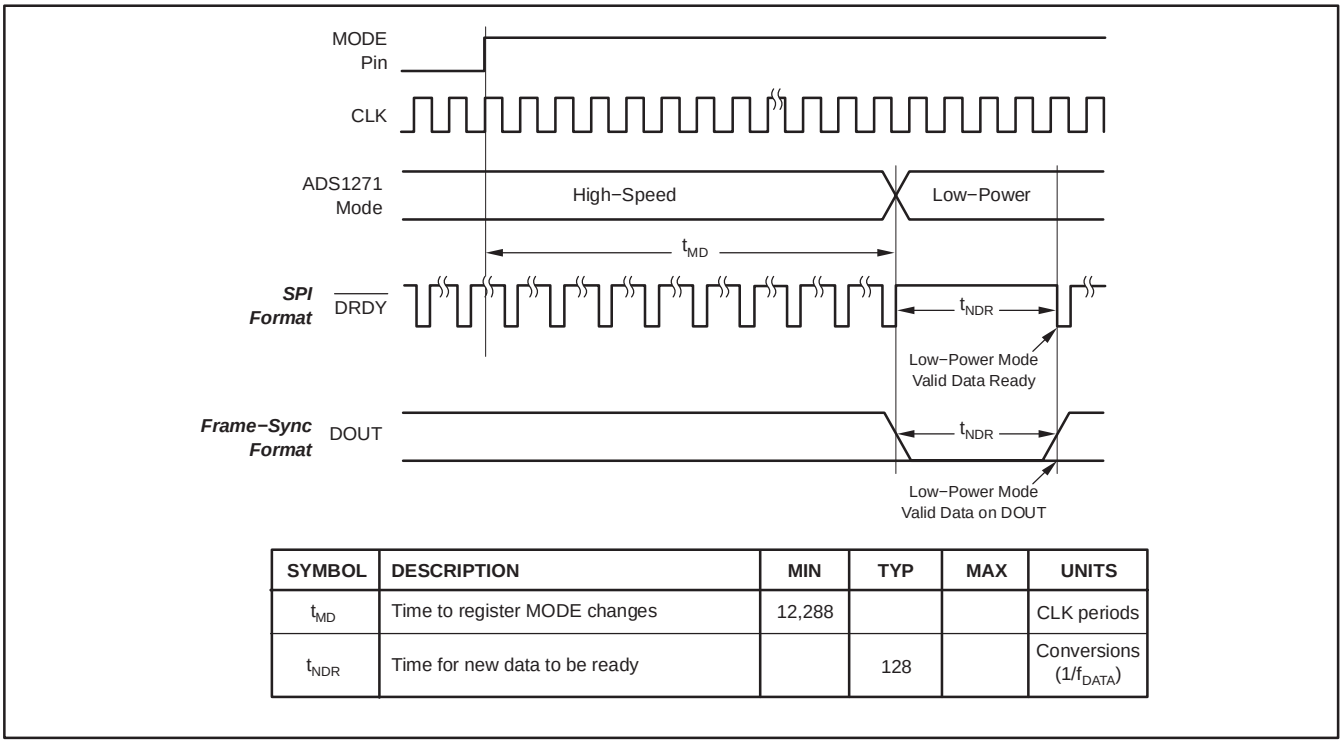

SYMBOL	DESCRIPTION	MIN	TYP	MAX	UNITS
t_{MD}	Time to register MODE changes	12,288			CLK periods
t_{NDR}	Time for new data to be ready		128		Conversions ($1/f_{DATA}$)

Figure 43. Mode Change Timing

SYNCHRONIZATION

The $\overline{\text{SYNC}}/\overline{\text{PDWN}}$ pin has two functions. When pulsed, it synchronizes the start of conversions and, if held low for more than 2^{19} CLK cycles (t_{SYN}), places the ADS1271 in Power-Down mode. See the ***Power-Down and Offset Calibration*** section for more details.

The ADS1271 can be synchronized by taking $\overline{\text{SYNC}}/\overline{\text{PDWN}}$ low. This stops the conversion process and resets the internal counters used by the digital filter. Return $\overline{\text{SYNC}}/\overline{\text{PDWN}}$ high on the rising edge of CLK to begin the conversion process. Synchronization allows the conversions to be aligned with an external event; for example, the changing of an external multiplexer on the analog inputs. It can also be used to synchronize the conversions of multiple ADS1271s.

In the SPI format, $\overline{\text{DRDY}}$ goes high as soon as $\overline{\text{SYNC}}/\overline{\text{PDWN}}$ is taken low, as shown in Figure 44. After $\overline{\text{SYNC}}/\overline{\text{PDWN}}$ is returned high, $\overline{\text{DRDY}}$ stays high while the digital filter is settling. Once valid data is ready for retrieval, $\overline{\text{DRDY}}$ goes low.

In the Frame-Sync format, DOUT goes low as soon as $\overline{\text{SYNC}}/\overline{\text{PDWN}}$ is taken low, as shown in Figure 45. After $\overline{\text{SYNC}}/\overline{\text{PDWN}}$ is returned high, DOUT stays low while the digital filter is settling. Once valid data is ready for retrieval, DOUT begins to output valid data. The device detects the state of the $\overline{\text{SYNC}}/\overline{\text{PDWN}}$ pin on the falling edge. When synchronizing multiple devices, set the $\overline{\text{SYNC}}/\overline{\text{PDWN}}$ pin high on the rising edge of SCLK to ensure all devices are restarted on the same SCLK period. It is recommended to leave FSYNC and SCLK running during a synchronization.

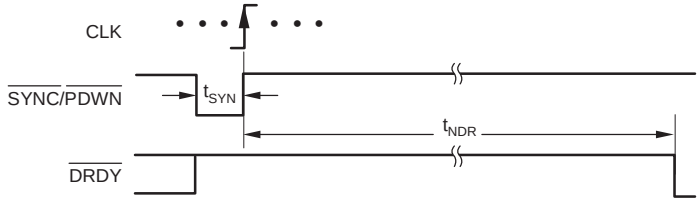

SYMBOL	DESCRIPTION	MIN	TYP	MAX	UNITS
t_{SYN}	Synchronize pulse width	1		2^{18}	CLK periods
t_{NDR}	Time for new data to be ready		128		Conversions ($1/f_{DATA}$)

Figure 44. Synchronization Timing for SPI format

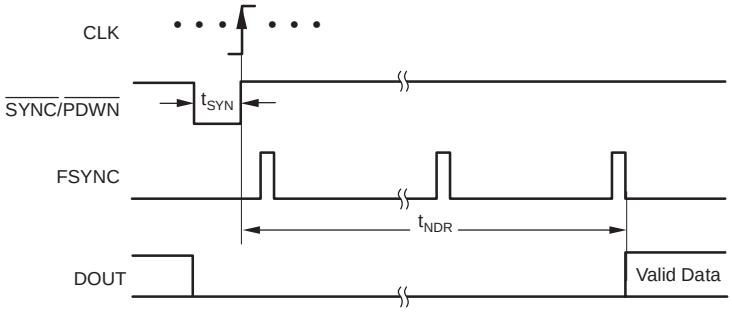

SYMBOL	DESCRIPTION	MIN	TYP	MAX	UNITS
t_{SYN}	Synchronize pulse width	1		2^{18}	CLK periods
t_{NDR}	Time for new data to be ready	128		129	Conversions ($1/f_{DATA}$)

Figure 45. Synchronization Timing for Frame-Sync Format

POWER-DOWN AND OFFSET CALIBRATION

In addition to controlling synchronization, the $\overline{\text{SYNC}}/\overline{\text{PDWN}}$ pin also serves as the control for Power-Down mode and offset calibration. To enter this mode, hold the $\overline{\text{SYNC}}/\overline{\text{PDWN}}$ pin low for at least 2^{19} CLK periods. While in Power-Down mode, both the analog and digital circuitry are completely deactivated. The digital inputs are internally disabled so that is not necessary to shut down CLK and SCLK. To exit Power-Down mode, return $\overline{\text{SYNC}}/\overline{\text{PDWN}}$ high on the rising edge of CLK.

The ADS1271 uses a chopper-stabilized modulator to provide inherently very low offset drift. To further minimize offset, the ADS1271 automatically performs an offset self-calibration when exiting Power-Down mode. When power down completes, the offset self-calibration begins with the inputs AINP and AINN automatically disconnected from the signal source and internally shorted together. There is no need to modify the signal source applied to the analog inputs during this calibration. *It is critical for the reference voltage to be stable when exiting Power-Down mode; otherwise, the calibration will be corrupted.*

The offset self-calibration only removes offset errors internal to the device, not offset errors due to external sources.

NOTE: When an offset self-calibration is performed, the resulting offset value will vary each time within the peak-to-peak noise range of the converter. In High-Speed mode, this is typically 178 LSBs.

The offset calibration value is cleared whenever the device mode is changed (for example, from High-Speed mode to High-Resolution mode).

When using the SPI format, $\overline{\text{DRDY}}$ will stay high after exiting Power-Down mode while the digital filter settles, as shown in Figure 46.

When using the Frame-Sync format, DOUT will stay low after exiting Power-Down mode while the digital filter settles, as shown in Figure 47.

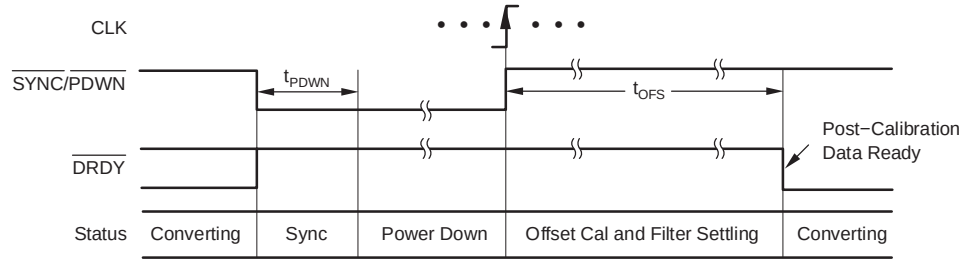

SYMBOL	DESCRIPTION	MIN	TYP	MAX	UNITS
t_{PDWN}	$\overline{\text{SYNC}}/\overline{\text{PDWN}}$ pulse width to enter Power−Down mode	2^{19}			CLK periods
t_{OFS}	Time for offset calibration and filter settling		256		Conversions ($1/f_{DATA}$)

Figure 46. Power-Down Timing for SPI format

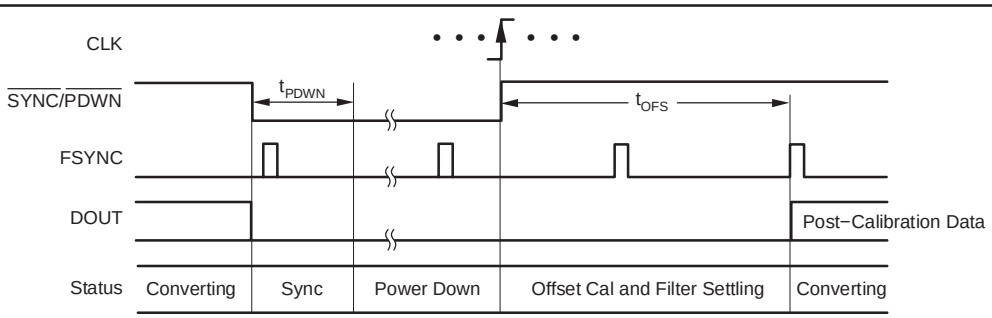

SYMBOL	DESCRIPTION	MIN	TYP	MAX	UNITS
t_{PDWN}	$\overline{\text{SYNC}}/\overline{\text{PDWN}}$ pulse width to enter Power−Down mode	2^{19}			CLK periods
t_{OFS}	Time for offset calibration and filter settling	256		257	Conversions ($1/f_{DATA}$)

Figure 47. Power-Down Timing for Frame-Sync Format

POWER-UP SEQUENCE

The analog and digital supplies should be applied before any analog or digital input is driven. The power supplies may be sequenced in any order. Once the supplies and the voltage reference inputs have stabilized, data can be read from the device.

FREQUENCY RESPONSE

The digital filter sets the overall frequency response. The filter uses a multi-stage FIR topology to provide linear phase with minimal passband ripple and high stopband attenuation. The oversampling ratio of the digital filter (that is, the ratio of the modulator sampling to the output data rate: f_{MOD}/f_{DATA}) is a function of the selected mode, as shown in Table 7. f_{MOD} is CLK/2 or CLK/4, depending on the mode.

Table 7. Oversampling Ratio versus Mode

MODE	OVERSAMPLING RATIO (f_{MOD}/f_{DATA})
High-Speed	64
High-Resolution	128
Low-Power	64

High-Speed and Low-Power Modes

The digital filter configuration is the same in both High-Speed and Low-Power modes with the oversampling ratio set to 64. Figure 48 shows the frequency response in High-Speed and Low-Power modes normalized to f_{DATA}. Figure 49 shows the passband ripple. The transition from passband to stop band is illustrated in Figure 50. The overall frequency response repeats at 64x multiples of the modulator frequency f_{MOD}, as shown in Figure 51. These image frequencies, if present in the signal and not externally filtered, will fold back (or alias) into the passband, causing errors. However, with such a wide stopband, only a simple low-order, antialias filter is typically required in front of the ADS1271 inputs to limit out-of-band noise. See Table 8 for more detail.

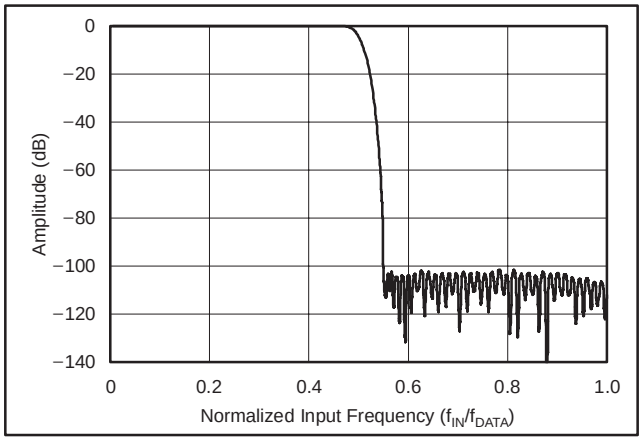

Figure 48. Frequency Response for High-Speed and Low-Power Modes

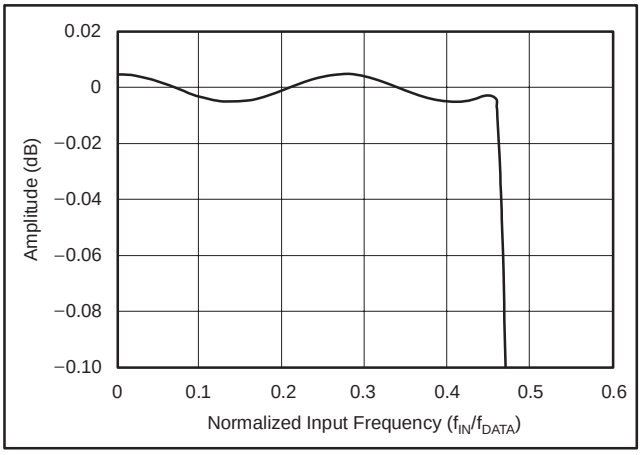

Figure 49. Passband Response for High-Speed and Low-Power Modes

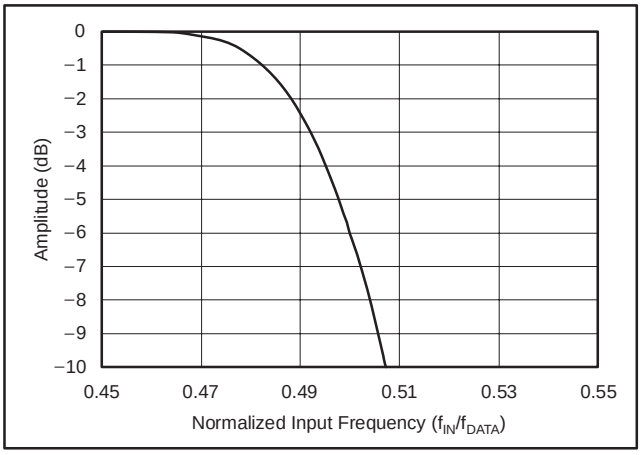

Figure 50. Transition Band Response for High-Speed and Low-Power Modes

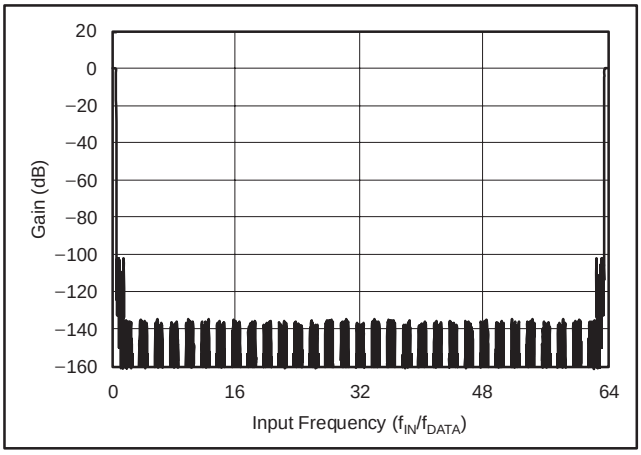

Figure 51. Frequency Response Out to f_{MOD} for High-Speed and Low-Power Modes

High-Resolution Mode

The oversampling ratio is 128 in High-Resolution mode. Figure 52 shows the frequency response in High-Resolution mode normalized to f_{DATA}. Figure 53 shows the passband ripple, and the transition from passband to stop band is illustrated in Figure 54. The overall frequency response repeats at multiples of the modulator frequency f_{MOD}, ($128 \times f_{DATA}$), as shown in Figure 55. With such an extremely wide stop band, only a simple antialias filter is typically required in front of the ADS1271 inputs to limit out-of-band noise. See Table 8 for more detail.

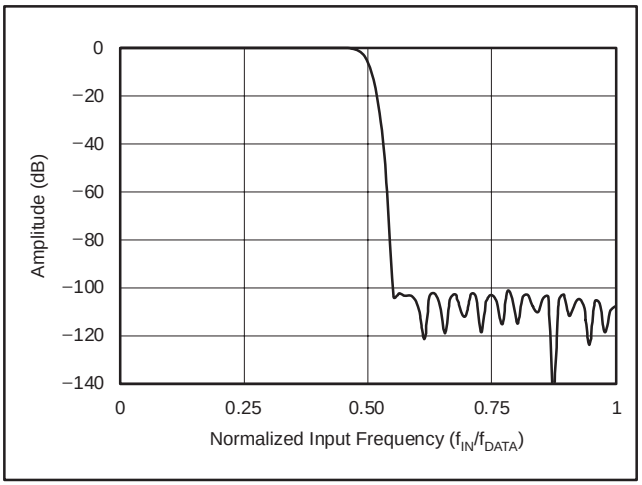

Figure 52. Frequency Response for High-Resolution Mode

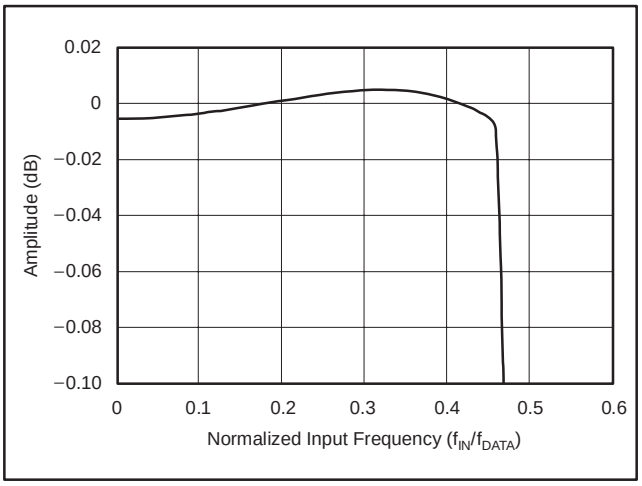

Figure 53. Passband Response for High-Resolution Mode

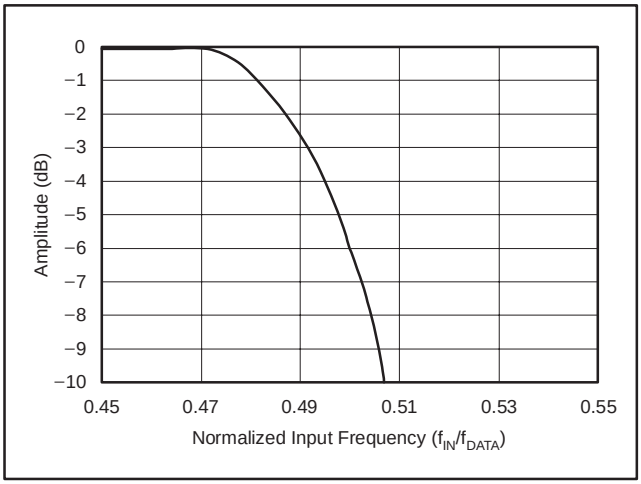

Figure 54. Transition Band Response for High-Resolution Mode

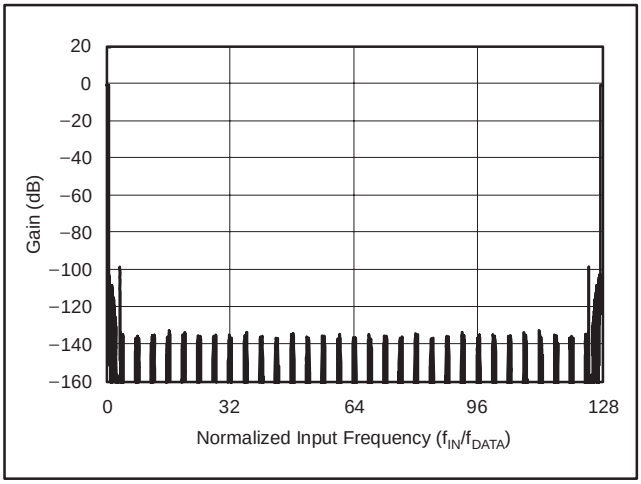

Figure 55. Frequency Response out to f_{MOD} for High-Resolution Mode

Table 8. Antialias Filter Order Image Rejection

ANTIALIAS FILTER ORDER	IMAGE REJECTION (dB) (f_{-3dB} at f_{DATA})	
	HS, LP	HR
1	39	45
2	75	87
3	111	129

PHASE RESPONSE

The ADS1271 incorporates a multiple stage, linear phase digital filter. Linear phase filters exhibit constant delay time versus input frequency (constant group delay). This means the time delay from any instant of the input signal to the same instant of the output data is constant and is independent of input signal frequency. This behavior results in essentially zero phase errors when analyzing multi-tone signals.

SETTLING TIME

As with frequency and phase response, the digital filter also determines settling time. Figure 56 shows the output settling behavior after a step change on the analog inputs normalized to conversion periods. The X axis is given in units of conversion. Note that after the step change on the input occurs, the output data changes very little prior to 30 conversion periods. The output data is fully settled after 76 conversion periods for High-Speed and Low-Power modes, and 78 conversions for High-Resolution mode.

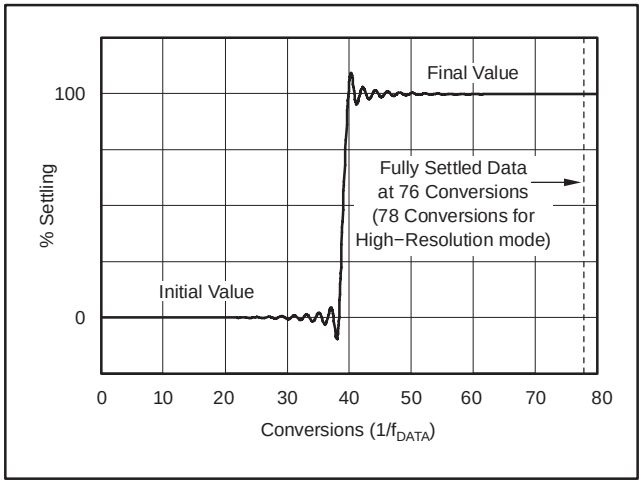

Figure 56. Settling Time for All Power Modes

DATA FORMAT

The ADS1271 outputs 24 bits of data in two's complement format.

A positive full-scale input produces an output code of 7FFFFFh, and the negative full-scale input produces an output code of 800000h. The output clips at these codes for signals exceeding full-scale. Table 9 summarizes the ideal output codes for different input signals.

Table 9. Ideal Output Code versus Input Signal

INPUT SIGNAL V_{IN} (AINP − AINN)	IDEAL OUTPUT CODE(1)
$\geq +V_{REF}$	7FFFFFh
$\frac{+V_{REF}}{2^{23} - 1}$	000001h
0	000000h
$\frac{-V_{REF}}{2^{23} - 1}$	FFFFFFh
$\leq -V_{REF}\left(\frac{2^{23}}{2^{23} - 1}\right)$	800000h

(1) Excludes effects of noise, INL, offset and gain errors.

SERIAL INTERFACE

Data is retrieved from the ADS1271 using the serial interface. To provide easy connection to either microcontrollers or DSPs, two formats are available for the interface: SPI and Frame-Sync. The FORMAT pin selects the interface. The same pins are used for both interfaces (SCLK, $\overline{\text{DRDY}}$/FSYNC, DOUT and DIN), though their respective functionality depends on the particular interface selected.

SPI SERIAL INTERFACE

The SPI-compatible format is a simple read-only interface. Data ready for retrieval is indicated by the $\overline{\text{DRDY}}$ output and is shifted out on the falling edge of SCLK, MSB first. The interface can be daisy-chained using the DIN input when using multiple ADS1271s. See the ***Daisy-Chaining*** section for more information.

SCLK (SPI Format)

The serial clock (SCLK) features a Schmitt-triggered input and shifts out data on DOUT on the falling edge. It also shifts in data on the falling edge on DIN when this pin is being used for daisy-chaining. The device shifts data out on the falling edge and the user shifts this data in on the rising edge. Even though the SCLK input has hysteresis, it is recommended to keep SCLK as clean as possible to prevent glitches from accidentally shifting the data. SCLK should be held low after data retrieval. SCLK may be run as fast as the CLK frequency. SCLK may be either in free-running or stop-clock operation between conversions. To maximize the converter performance, the ratio of CLK to SCLK should be held to:

$$\text{SCLK} = \frac{\text{CLK}}{2^N} \ (N = 0, 1, 2...).$$

DRDY/FSYNC

In the SPI format, this pin functions as the DRDY output. It goes low when data is ready for retrieval and then returns high on the rising edge of the first subsequent SCLK. If data is not retrieved (that is, SCLK is held low), DRDY will pulse high just before the next conversion data is ready, as shown in Figure 57. The new data is loaded within the ADS1271 one CLK cycle before DRDY goes low. All data must be shifted out before this time to avoid being overwritten.

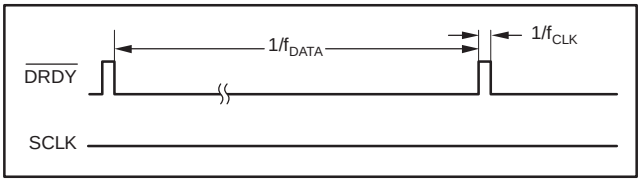

Figure 57. DRDY Timing with No Readback

DOUT

The conversion data is shifted out on DOUT. The MSB data is valid on DOUT when DRDY goes low. The subsequent bits are shifted out with each falling edge of SCLK. If daisy-chaining, the data shifted in using DIN will appear on DOUT after all 24 bits have been shifted out.

DIN

This input is used when multiple ADS1271s are to be daisy-chained together. The DOUT pin of the first device connects to the DIN pin of the next, etc. It can be used with either the SPI or Frame-Sync formats. Data is shifted in on the falling edge of SCLK. When using only one ADS1271, tie DIN low. See the ***Daisy-Chaining*** section for more information.

FRAME-SYNC SERIAL INTERFACE

Frame-Sync format is similar to the interface often used on audio ADCs. It operates in *slave* fashion—the user must supply framing signal FSYNC (similar to the *left/right clock* on stereo audio ADCs) and the serial clock SCLK (similar to the *bit clock* on audio ADCs). The data is output MSB first or *left-justified*. When using Frame-Sync format, the CLK, FSYNC and SCLK inputs must be synchronized together, as described in the following sub-sections.

SCLK (Frame-Sync Format)

The serial clock (SCLK) features a Schmitt-triggered input and shifts out data on DOUT on the falling edge. It also shifts in data on the falling edge on DIN when this pin is being used for daisy-chaining. Even though SCLK has hysteresis, it is recommended to keep SCLK as clean as possible to prevent glitches from accidentally shifting the data. When using Frame-Sync format, SCLK must run continuously. If it is shut down, the data readback will be corrupted. Frame-Sync format requires a specific relationship between SCLK and FSYNC, determined by the mode shown in Table 10.

Table 10. SCLK Period When Using Frame-Sync Format

MODE	REQUIRED SCLK PERIOD
High-Speed	$\tau_{FRAME}/64$
High-Resolution	$\tau_{FRAME}/128$
Low-Power	$\tau_{FRAME}/64$

DRDY/FSYNC

In Frame-Sync format, this pin is used as the FSYNC input. The frame-sync input (FSYNC) sets the frame period. The required FSYNC periods are shown in Table 11. For High-Speed mode, the FSYNC period must be 256 CLK periods. For both High-Resolution and Low-Power modes, the FSYNC period can be either 512 or 256 CLK periods; the ADS1271 will automatically detect which is being used. If the FSYNC period is not the proper value, data readback will be corrupted. It is recommended that FSYNC be aligned with the falling edge of SCLK.

Table 11. FSYNC Period

MODE	REQUIRED FSYNC PERIOD
High-Speed	256 CLK Periods
High-Resolution	256 or 512 CLK periods
Low-Power	256 or 512 CLK periods

DOUT

The conversion data is shifted out on DOUT. The MSB data becomes valid on DOUT on the SCLK rising edge prior to FSYNC going high. The subsequent bits are shifted out with each falling edge of SCLK. If daisy-chaining, the data shifted in using DIN will appear on DOUT after all 24 bits have been shifted out.

DIN

This input is used when multiple ADS1271s are to be daisy-chained together. It can be used with either SPI or Frame-Sync formats. Data is shifted in on the falling edge of SCLK. When using only one ADS1271, tie DIN low.See the ***Daisy-Chaining*** section for more information.

DAISY-CHAINING

Multiple ADS1271s can be daisy-chained together to simplify the serial interface connections. The DOUT of one ADS1271 is connected to the DIN of the next ADS1271. The first DOUT provides the output data and the last DIN in the chain is connected to ground. A common SCLK is used for all the devices in the daisy chain. Figure 58 shows an example of a daisy chain with four ADS1271s. Figure 59 shows the timing diagram when reading back in the SPI format. It takes 96 SCLKs to shift out all the data.

In SPI format, it is recommended to tie all the $\overline{\text{SYNC}}$/$\overline{\text{PDWN}}$ inputs together, which forces synchronization of all the devices. It is only necessary to monitor the $\overline{\text{DRDY}}$ output of one device when multiple devices are configured this way.

In Frame-Sync format, all of the devices are driven to synchronization by the FSYNC and SCLK inputs. However, to ensure synchronization to the same f_{CLK} cycle, it is recommended to tie all $\overline{\text{SYNC}}$/$\overline{\text{PDWN}}$ inputs together.

The device clocks the $\overline{\text{SYNC}}$/$\overline{\text{PDWN}}$ pin on the falling edge of f_{CLK}. To ensure exact synchronization, the $\overline{\text{SYNC}}$/$\overline{\text{PDWN}}$ pin should transition on the rising edge of f_{CLK}

Since DOUT and DIN are both shifted on the falling edge of SCLK, the propagation delay on DOUT creates the setup time on DIN. Minimize the skew in SCLK to avoid timing violations. See ***Mode Selection*** section for MODE pin use when daisy-chaining.

The SPI format offers the most flexibility when daisy-chaining because there is more freedom in setting the SCLK frequency. The maximum number of ADS1271s that can be daisy-chained is determined by dividing the conversion time ($1/f_{DATA}$) by the time needed to read back all 24 bits ($24 \times 1/f_{SCLK}$).

Consider the case where:

f_{CLK} = 27MHz

mode = High-Resolution (52,734SPS)

format = SPI

f_{SCLK} = 27MHz

The maximum length of the daisy-chain is:

27MHz/(24 × 52,734SPS) = 21.3

Rounding down gives 21 as the maximum number of ADS1271s that can be daisy-chained.

Daisy-chaining also works in Frame-Sync format, but the maximum number of devices that can be daisy-chained is less than when using the SPI format. The ratio between the frame period and SCLK period is fixed, as shown in Table 10. Using these values, the maximum number of devices is two for High-Speed and Low-Power modes, and four for High-Resolution mode.

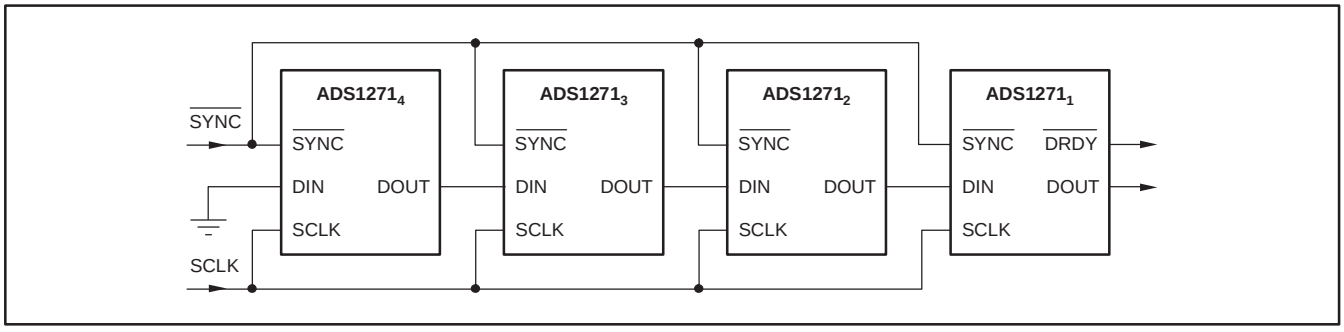

Figure 58. Example of SPI-Format, Daisy-Chain Connection for Multiple ADS1271s

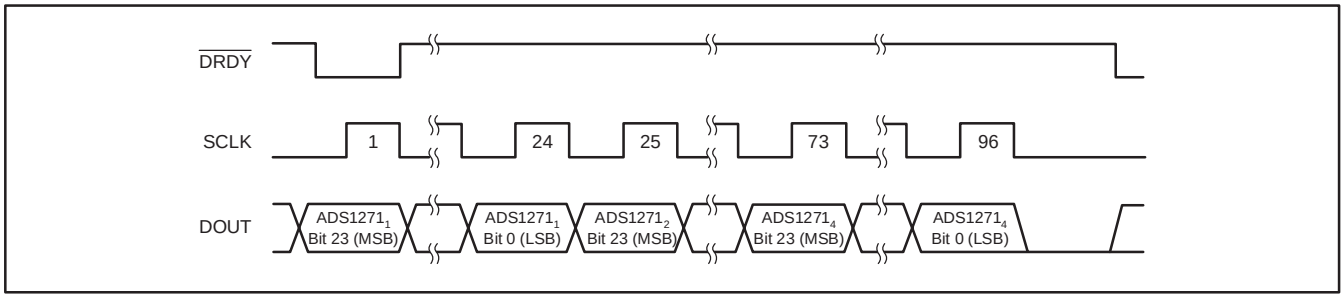

Figure 59. Timing Diagram for Example in Figure 58 (SPI Format)

APPLICATION INFORMATION

To obtain the specified performance from the ADS1271, the following layout and component guidelines should be considered.

1. Power Supplies: The device requires two power supplies for operation: DVDD and AVDD. The allowed range for DVDD is 1.65V to 3.6V, and AVDD is restricted to 4.75V to 5.25V. Best performance is achieved when DVDD = 1.8V. For both supplies, use a 10μF tantalum capacitor, bypassed with a 0.1μF ceramic capacitor, placed close to the device pins. Alternatively, a single 10μF ceramic capacitor can be used. The supplies should be relatively free of noise and should not be shared with devices that produce voltage spikes (such as relays, LED display drivers, etc.). If a switching power supply source is used, the voltage ripple should be low (< 2mV). The power supplies may be sequenced in any order.

2. Ground Plane: A single ground plane connecting both AGND and DGND pins can be used. If separate digital and analog grounds are used, connect the grounds together at the converter.

3. Digital Inputs: It is recommended to source terminate the digital inputs to the device with 50Ω series resistors. The resistors should be placed close to the driving end of digital source (oscillator, logic gates, DSP, etc.) This helps to reduce ringing on the digital lines, which may lead to degraded ADC performance.

4. Analog/Digital Circuits: Place analog circuitry (input buffer, reference) and associated tracks together, keeping them away from digital circuitry (DSP, microcontroller, logic). Avoid crossing digital tracks across analog tracks to reduce noise coupling and crosstalk.

5. Reference Inputs: It is recommended to use a minimum 10μF tantalum with a 0.1μF ceramic capacitor directly across the reference inputs, REFP and REFN. The reference input should be driven by a low-impedance source. For best performance, the reference should have less than $3\mu V_{RMS}$ broadband noise. For references with noise higher than this, external reference filtering may be necessary.

6. Analog Inputs: The analog input pins must be driven differentially to achieve specified performance. A true differential driver or transformer (AC applications) can be used for this purpose. Route the analog inputs tracks (AINP, AINN) as a pair from the buffer to the converter using short, direct tracks and away from digital tracks.

   A 1nF to 10nF capacitor should be used directly across the analog input pins, AINP and AINN. A low-k dielectric (such as COG or film type) should be used to maintain low THD. Capacitors from each analog input to ground should be used. They should be no larger than 1/10 the size of the difference capacitor (typically 100pF) to preserve the AC common-mode performance.

7. Component Placement: Place the power supply, analog input, and reference input bypass capacitors as close as possible to the device pins. This is particularly important for the small-value ceramic capacitors. Surface-mount components are recommended to avoid the higher inductance of leaded components.

Figure 60 to Figure 62 illustrate basic connections and interfaces that can be used with the ADS1271.

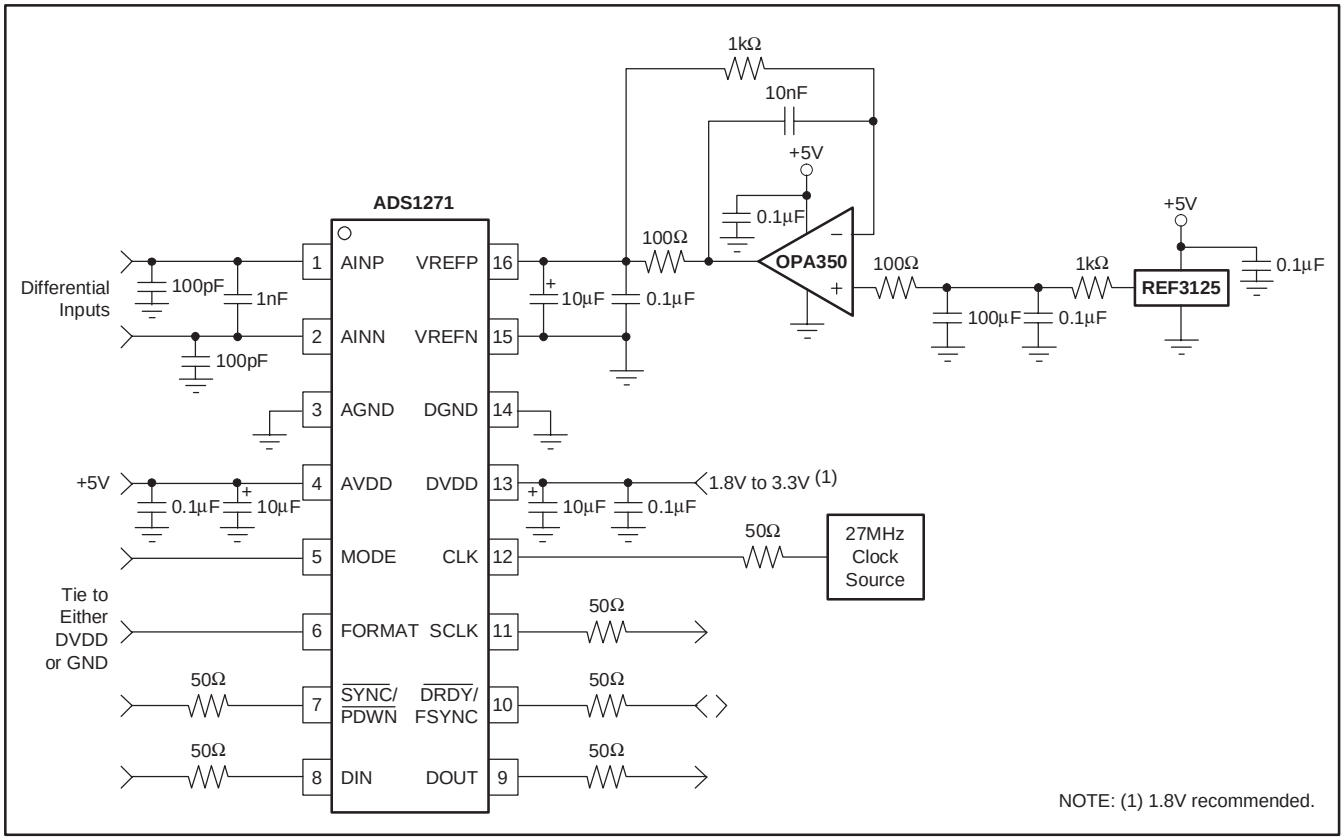

Figure 60. Basic Connection Drawing

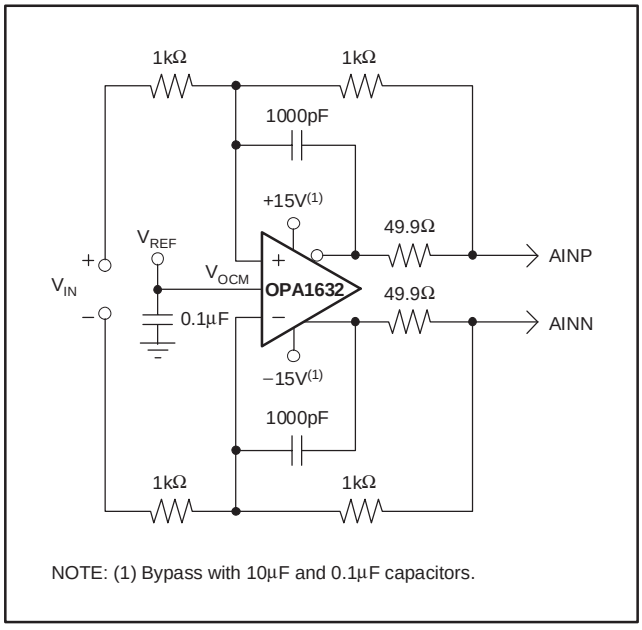

Figure 61. Basic Differential Signal Interface

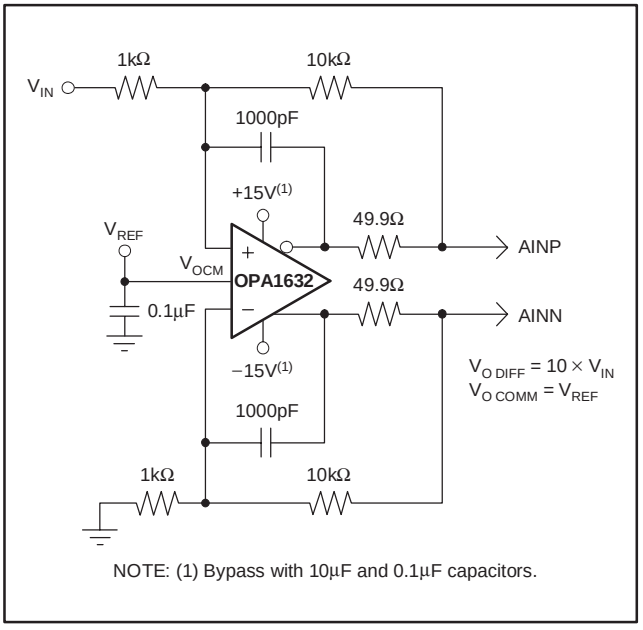

Figure 62. Basic Single-Ended Signal Interface

PACKAGING INFORMATION

Orderable Device	Status (1)	Package Type	Package Drawing	Pins	Package Qty	Eco Plan (2)	Lead/Ball Finish	MSL Peak Temp (3)
ADS1271IPW	ACTIVE	TSSOP	PW	16	94	None	CU	Level-2-240C-1 YEAR
ADS1271IPWR	ACTIVE	TSSOP	PW	16	2500	None	CU	Level-2-240C-1 YEAR

(1) The marketing status values are defined as follows:
ACTIVE: Product device recommended for new designs.
LIFEBUY: TI has announced that the device will be discontinued, and a lifetime-buy period is in effect.
NRND: Not recommended for new designs. Device is in production to support existing customers, but TI does not recommend using this part in a new design.
PREVIEW: Device has been announced but is not in production. Samples may or may not be available.
OBSOLETE: TI has discontinued the production of the device.

(2) Eco Plan - May not be currently available - please check http://www.ti.com/productcontent for the latest availability information and additional product content details.
None: Not yet available Lead (Pb-Free).
Pb-Free (RoHS): TI's terms "Lead-Free" or "Pb-Free" mean semiconductor products that are compatible with the current RoHS requirements for all 6 substances, including the requirement that lead not exceed 0.1% by weight in homogeneous materials. Where designed to be soldered at high temperatures, TI Pb-Free products are suitable for use in specified lead-free processes.
Green (RoHS & no Sb/Br): TI defines "Green" to mean "Pb-Free" and in addition, uses package materials that do not contain halogens, including bromine (Br) or antimony (Sb) above 0.1% of total product weight.

(3) MSL, Peak Temp. -- The Moisture Sensitivity Level rating according to the JEDECindustry standard classifications, and peak solder temperature.

Important Information and Disclaimer: The information provided on this page represents TI's knowledge and belief as of the date that it is provided. TI bases its knowledge and belief on information provided by third parties, and makes no representation or warranty as to the accuracy of such information. Efforts are underway to better integrate information from third parties. TI has taken and continues to take reasonable steps to provide representative and accurate information but may not have conducted destructive testing or chemical analysis on incoming materials and chemicals. TI and TI suppliers consider certain information to be proprietary, and thus CAS numbers and other limited information may not be available for release.

In no event shall TI's liability arising out of such information exceed the total purchase price of the TI part(s) at issue in this document sold by TI to Customer on an annual basis.

PW (R-PDSO-G)** **PLASTIC SMALL-OUTLINE PACKAGE**

14 PINS SHOWN

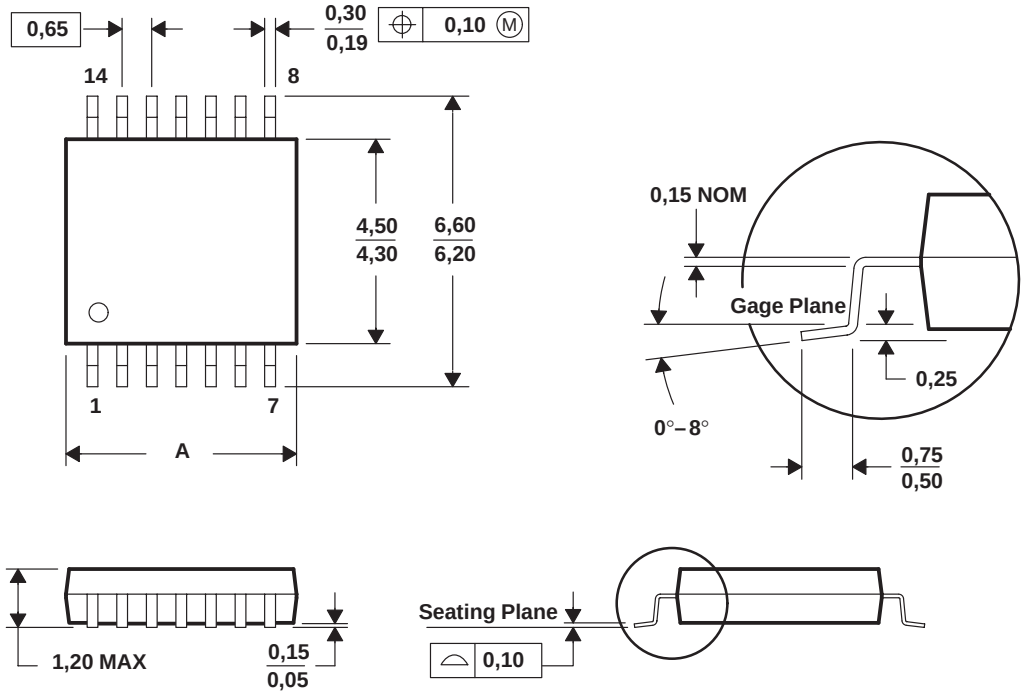

DIM \ PINS **	8	14	16	20	24	28
A MAX	3,10	5,10	5,10	6,60	7,90	9,80
A MIN	2,90	4,90	4,90	6,40	7,70	9,60

4040064/F 01/97

NOTES: A. All linear dimensions are in millimeters.
B. This drawing is subject to change without notice.
C. Body dimensions do not include mold flash or protrusion not to exceed 0,15.
D. Falls within JEDEC MO-153

IMPORTANT NOTICE

Texas Instruments Incorporated and its subsidiaries (TI) reserve the right to make corrections, modifications, enhancements, improvements, and other changes to its products and services at any time and to discontinue any product or service without notice. Customers should obtain the latest relevant information before placing orders and should verify that such information is current and complete. All products are sold subject to TI's terms and conditions of sale supplied at the time of order acknowledgment.

TI warrants performance of its hardware products to the specifications applicable at the time of sale in accordance with TI's standard warranty. Testing and other quality control techniques are used to the extent TI deems necessary to support this warranty. Except where mandated by government requirements, testing of all parameters of each product is not necessarily performed.

TI assumes no liability for applications assistance or customer product design. Customers are responsible for their products and applications using TI components. To minimize the risks associated with customer products and applications, customers should provide adequate design and operating safeguards.

TI does not warrant or represent that any license, either express or implied, is granted under any TI patent right, copyright, mask work right, or other TI intellectual property right relating to any combination, machine, or process in which TI products or services are used. Information published by TI regarding third-party products or services does not constitute a license from TI to use such products or services or a warranty or endorsement thereof. Use of such information may require a license from a third party under the patents or other intellectual property of the third party, or a license from TI under the patents or other intellectual property of TI.

Reproduction of information in TI data books or data sheets is permissible only if reproduction is without alteration and is accompanied by all associated warranties, conditions, limitations, and notices. Reproduction of this information with alteration is an unfair and deceptive business practice. TI is not responsible or liable for such altered documentation.

Resale of TI products or services with statements different from or beyond the parameters stated by TI for that product or service voids all express and any implied warranties for the associated TI product or service and is an unfair and deceptive business practice. TI is not responsible or liable for any such statements.

Following are URLs where you can obtain information on other Texas Instruments products and application solutions:

Products		**Applications**	
Amplifiers	amplifier.ti.com	Audio	www.ti.com/audio
Data Converters	dataconverter.ti.com	Automotive	www.ti.com/automotive
DSP	dsp.ti.com	Broadband	www.ti.com/broadband
Interface	interface.ti.com	Digital Control	www.ti.com/digitalcontrol
Logic	logic.ti.com	Military	www.ti.com/military
Power Mgmt	power.ti.com	Optical Networking	www.ti.com/opticalnetwork
Microcontrollers	microcontroller.ti.com	Security	www.ti.com/security
		Telephony	www.ti.com/telephony
		Video & Imaging	www.ti.com/video
		Wireless	www.ti.com/wireless

Mailing Address: Texas Instruments
Post Office Box 655303 Dallas, Texas 75265

Copyright © 2004, Texas Instruments Incorporated