User's Guide

SBAU206A–April 2015–Revised December 2015

ADS126xEVM-PDK

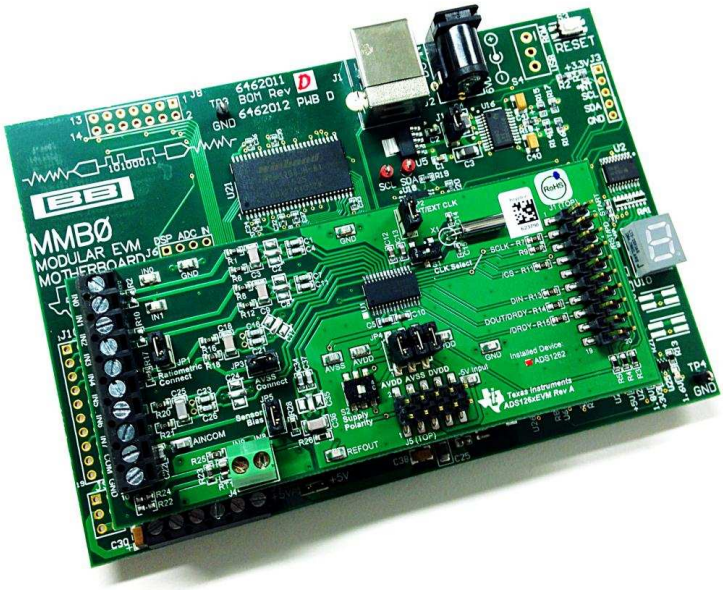

ADS126xEVM-PDK

This user's guide describes the operation and use of the ADS126x evaluation module (ADS126xEVM). The ADS1262 and ADS1263 are low-noise, low-drift 32-bit delta-sigma analog-to-digital converters (ADC) for precision industrial applications. The performance demonstration kit (PDK) is intended for prototyping and evaluating the ADS1262 and ADS1263. The ADS126xEVM-PDK includes the ADS126xEVM daughter card, MMB0 motherboard, A-to-B USB cable, and supporting software.

This document includes a detailed description of the hardware and software, bill of materials, and schematic for the ADS126xEVM.

Throughout this document, the terms ADS126xEVM, demonstration kit, evaluation board, evaluation module, and EVM are synonymous with the ADS126xEVM-PDK.

The following EVM-compatible devices and related documents are available through the Texas Instruments website at www.ti.com.

Related Documents

Device	Literature Number
ADS1262	SBAS661
ADS1263	
TPS79225	SLVS337B
TPS72325	SLVS346C

E2E is a trademark of Texas Instruments, Inc.
Windows XP, Windows 7 are trademarks of Microsoft Corporation.
X2Y is a registered trademark of X2Y Attenuators, LLC.
All other trademarks are the property of their respective owners.

Copyright © 2015, Texas Instruments Incorporated

Contents

1 ADS126xEVM Overview 4
1.1 EVM Features 4
1.2 Hardware Overview 4
2 ADS126xEVM Hardware 5
2.1 Default Jumper and Switch Configuration 5
2.2 Quick Reference 6
2.3 Power Supply 7
2.4 ADC Clock Source Options 11
2.5 Digital Interface, J1 12
2.6 Analog Inputs 13
3 ADS126xEVM Software 17
3.1 ADCPro and ADS126xEVM Plugin Installation 17
3.2 Connecting the Hardware 17
3.3 Using ADCPro with the ADS126xEVM 18
3.4 Using the ADS126xEVM Plugin 20
4 ADS126xEVM Bill of Materials and Schematic 31
4.1 Bill of Materials 31
4.2 Schematic 33

List of Figures

1 ADS126xEVM Partitioning 4
2 ADS126xEVM connected to MMB0 motherboard 4
3 Default Jumper and Switch Settings 5
4 Power Supply Circuitry Schematic 7
5 Power-Supply Circuitry (Default Jumper Settings) 7
6 MMB0 Configuration for Wall-Adapter Power Supply 8
7 MMB0 Configuration for a Unipolar-Bench Power Supply 9
8 MMB0 Configuration for a Bipolar Bench Power Supply 10
9 A) Schematic of ADS126xEVM Clocking Circuitry and B) Clocking Components on the ADS126xEVM 11
10 Analog Input Support Circuitry on the ADS126xEVM 13
11 ADS126xEVM Ratiometric Connection Example 15
12 J4 Thermocouple Input 16
13 Loading the ADS1262EVM Plugin in ADCPro 18
14 EVM Connection Status 18
15 ADS1262EVM Plugin Tabs 19
16 Loading a Test Plugin in ADCPro 19
17 Tab 1 Settings 20
18 Tab 2 Settings 21
19 Tab 3 Settings 22
20 Tab 4 Settings 23
21 Tab 5 Settings 24
22 Tab 6 Settings 25
23 Tab 7 Settings 26
24 Tab 8: Register Map 27
25 Tab 9: Register Map 28
26 Tab 10: Extras / About 29
27 Data Monitor Window 30
28 Status Byte Error Pop-up 30
29 Schematic 33

Copyright © 2015, Texas Instruments Incorporated

List of Tables

1 Factory Default Settings 5
2 Critical Connections 6
3 J1, Serial Interface Header 12
4 ADS126x Analog Input Pin Functions 14
5 ADS126xEVM Bill of Materials 31

Copyright © 2015, Texas Instruments Incorporated

1 ADS126xEVM Overview

The ADS126xEVM-PDK is an evaluation module using the MMB0 hardware and ADCPro software platform for evaluation of the ADS1262 and ADS1263 (both referenced to as ADS126x in this document). The standalone ADS126xEVM is useful for prototyping designs and firmware.

1.1 EVM Features

- Includes all required support circuitry for the ADS1262 and ADS1263
- ADCPro evaluation software for Windows XP™ and Windows 7™ operating systems, with built-in analysis tools
- Configurable inputs, references, supplies, and clock sources
- Easily accessible signals through test points and headers

1.2 Hardware Overview

The EVM layout is partitioned as follows: the analog input/output (I/O) section, digital I/O header, power components, and clock circuitry. All these sections connect to the ADS126x TSSOP package located in the center of the EVM. Figure 1 visually identifies each of these areas on the EVM.

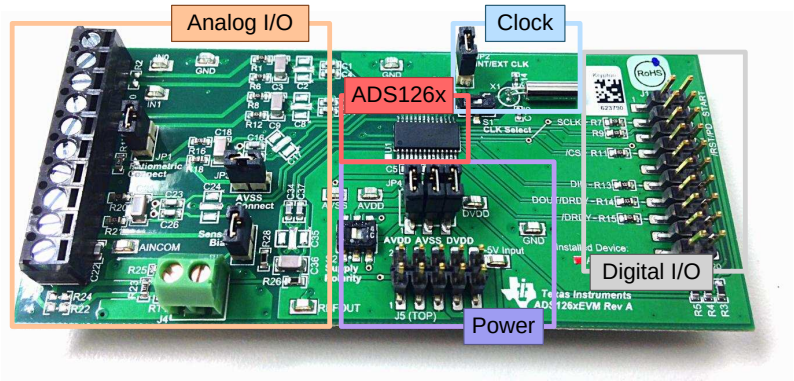

Figure 1. ADS126xEVM Partitioning

Figure 2 shows the EVM connected to the MMB0 motherboard.

Figure 2. ADS126xEVM connected to MMB0 motherboard

The MMB0 provides two main functions:

1. Provides power to the ADS126xEVM
2. Interfaces between ADCPro and the ADS126x.

The default configuration of the MMB0 is sufficient to configure the ADS126x with a single supply. See Section 2.3.2 to configure the EVM with bipolar supplies. A schematic of the MMB0 motherboard is available at ftp://ftp.ti.com/pub/data_acquisition/ADCPro/Support/MMB0_Sch_RevD.PDF. The MMB0 is intended to be used with the accompanying EVM software and does not have additional resources to support the use as a firmware development platform.

Copyright © 2015, Texas Instruments Incorporated

2 ADS126xEVM Hardware

This section provides details about the ADS126xEVM hardware.

2.1 Default Jumper and Switch Configuration

The ADS126xEVM is factory configured with the jumper and switch settings shown in Figure 3 and listed in Table 1. The ADS126xEVM operates with these default settings using a single supply and external crystal oscillator.

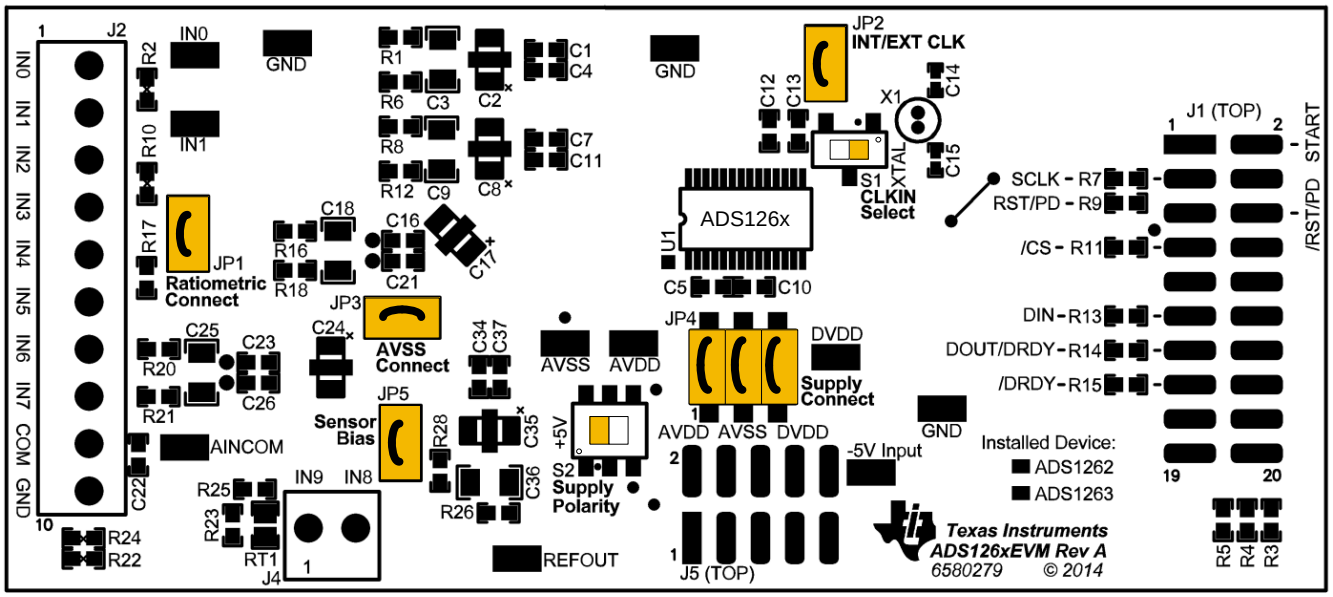

Figure 3. Default Jumper and Switch Settings

Table 1. Factory Default Settings

Name	Default Setting	Function
JP1	Shorted	Shorts IN4 to IN6 (for two-wire ratiometric measurements)
JP2	Shorted	Used in conjunction with S1 for selecting or inputting the master clock
JP3	Shorted	Connects IN5 to AVSS to setup a current-controlled reference voltage across R17
JP4	1-2, 3-4, and 5-6 shorted	Power supply connections to the ADS126x
JP5	Shorted	Connects the thermocouple input J4.1 to AINCOM for biasing
S1	1-2 (right)	Used in conjunction with JP2 to select master clock source
S2	2-3 and 5-6 (left)	Selects unipolar or bipolar supplies for the ADS126x (the bipolar option requires an additional bench supply)

NOTE:

- Shorted jumpers on JP4 are required to connect the ADS126x to AVDD, AVSS, and DVDD power supplies. These jumpers can be removed for measuring current, or for connecting an external power supply.
- The JP2, JP3, and JP5 jumpers are not required. Theses jumpers modify the analog input connections for biasing and ratiometric measurements. See Section 2.6 for more details.

Copyright © 2015, Texas Instruments Incorporated

2.2 Quick Reference

Table 2 provides a quick summary of the key connections necessary for EVM operation. This information is helpful when using an external processor or for monitoring EVM operation.

Table 2. Critical Connections

Function		Header (Pin)	Pin Name	Description
SPI	$\overline{CS}$	J1.7	$\overline{CS}$	Chip select
	SCLK	J1.3	SCLK	Serial clock
	DIN	J1.11	DIN	Data in
	DOUT/$\overline{DRDY}$	J1.13	DOUT	Data out
	$\overline{DRDY}$	J1.15	$\overline{DRDY}$	Data ready
Power	+3.3 V	J5.9	+3.3V	Digital supply
	+5 V	J5.3	+5V	Analog supply
	GND	J1.4	DGND	Analog and digital supply ground
Analog inputs	Channels 0-5	J3.1-6	AIN0-AIN5	Analog or reference inputs
	Channels 6-7	J3.7-8	AIN6-AIN7	Analog inputs
	Channels 8-9	J4.2,1	AIN8, AIN9	Thermocouple or analog inputs
	Channel 10	J3.10	AINCOM	Analog or common-reference input

Copyright © 2015, Texas Instruments Incorporated

2.3 Power Supply

An external supply (not included) is required to power the MMB0 and ADS126xEVM. The ADS126xEVM is powered by the MMB0 motherboard (through the J5 header), and allows for either a single 5-V or bipolar ±2.5-V supply to operate the ADS126x. By default, the ADS126xEVM is configured for a single 5-V supply. Power the MMB0 by connecting a wall adapter to the J2 power jack, or another external power source wired to the J14 power header (the MMB0 does not use USB power). Section 2.3.1 and Section 2.3.2 discuss the required connections to power MMB0 for either ADS126x supply mode.

Figure 4 shows the relevant power supply circuitry on the ADS126xEVM.

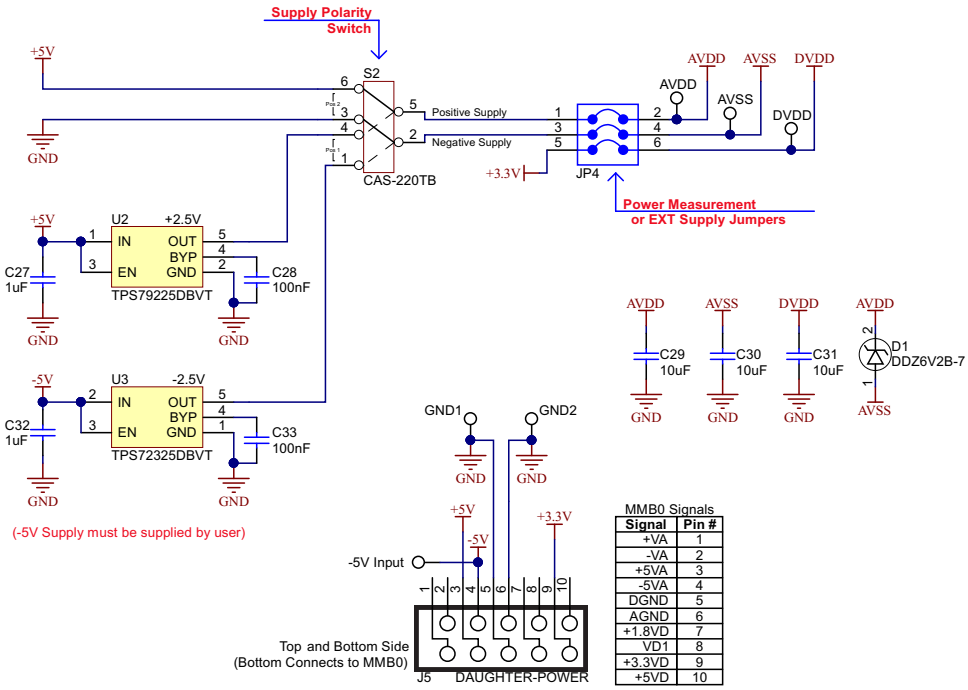

Figure 4. Power Supply Circuitry Schematic

The JP4 jumpers are required to power the ADS126x. Removing these jumpers allows for an external power supply connection or an ammeter connection to monitor the supply currents. Mini-clip test points may also be used to connect to the ADS126xEVM supplies. Figure 5 shows the JP4 jumpers, switch S2, and the power-supply test points.

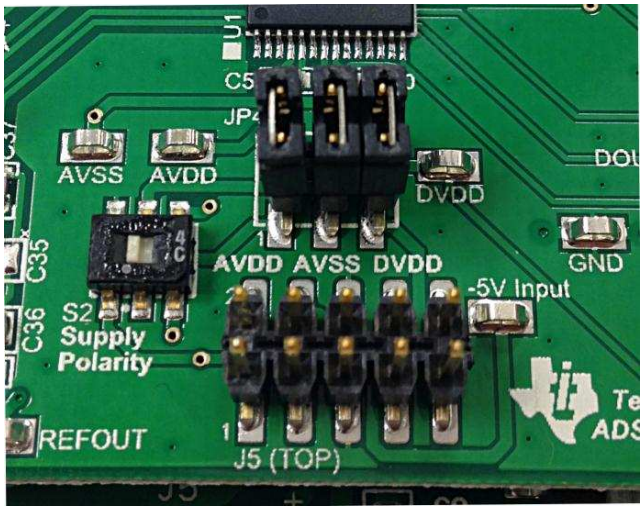

Figure 5. Power-Supply Circuitry (Default Jumper Settings)

Copyright © 2015, Texas Instruments Incorporated

2.3.1 Single 5-V Supply Configurations

To operate the EVM with a single 5-V supply, first check that switch S2 is in the default position (switched to the left) and the JP4 jumpers are shorted as shown in Figure 5.

Next, configure the MMB0 motherboard in one of the following ways, as described in Section 2.3.1.1 or Section 2.3.1.2.

2.3.1.1 Wall-Adapter Power Supply (Default Configuration)

Make sure that the MMB0 jumpers J12 and J13B are shorted (default), as shown in Figure 6. In this configuration, when a wall-adapter power supply is connected to J2, the MMB0 board generates the 5-V analog supply and 3.3-V digital supply for the ADS126xEVM. Refer to Section 2.3.1.1.1 for compatible wall-adapter, power-supply requirements.

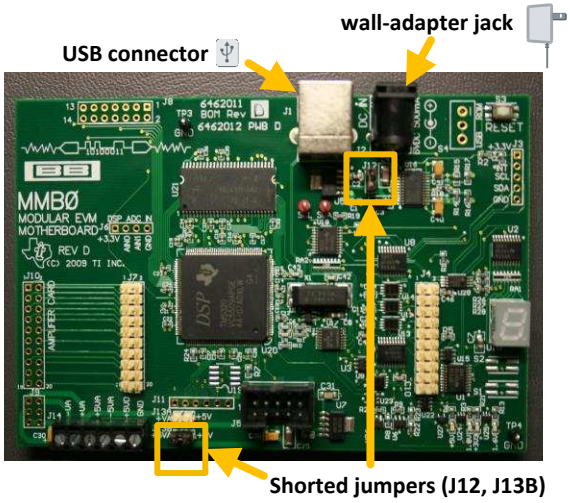

Figure 6. MMB0 Configuration for Wall-Adapter Power Supply

NOTE: For clarity, the ADS126xEVM daughter card is not shown in Figure 6, Figure 7, or Figure 8. The ADS126xEVM may need to be removed from the MMB0 motherboard to access the MMB0 jumpers. Power down the MMB0 board when mounting or removing the ADS126xEVM daughter card.

2.3.1.1.1 External Wall-Adapter Power-Supply Requirements

- Output voltage: 5.5 VDC to 15 VDC
- Maximum output current: ≥ 500 mA
- Output connector: barrel plug (positive center), 2.5-mm I.D. × 5.5-mm O.D. (9-mm insertion depth)

NOTE: Use an external power supply that complies with applicable regional safety standards; for example, UL, CSA, VDE, CCC, PSE, and so forth.

Copyright © 2015, Texas Instruments Incorporated

2.3.1.2 Bench Power Supply

To use the MMB0 with an external bench power supply, remove the J12 jumper, as shown in Figure 7. Removing the jumper allows an external 5-V power supply to be connected to +5VA on the J14 terminal block. Jumper J13B connects +5VA to +5VD and must remain shorted. In this configuration, the MMB0 derives the 3.3-V digital supply for the ADS126xEVM from the 5-V bench supply, and the bench supply directly supplies the analog supply voltage for the ADS126xEVM.

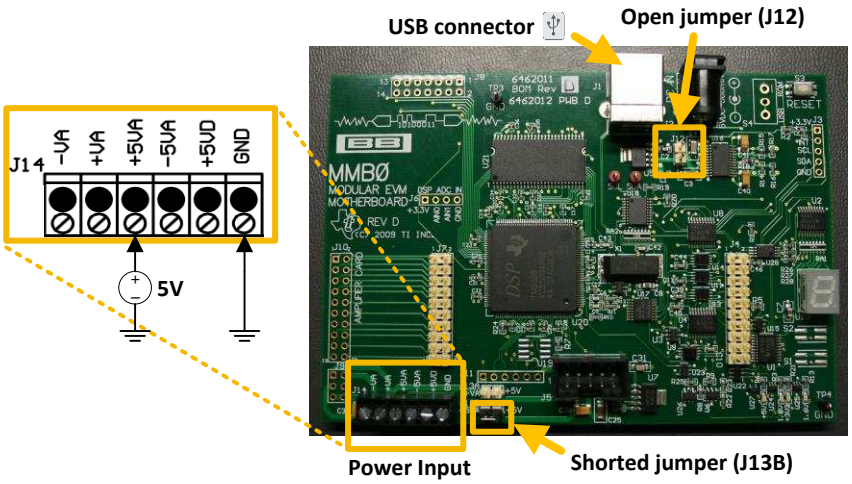

Figure 7. MMB0 Configuration for a Unipolar-Bench Power Supply

Copyright © 2015, Texas Instruments Incorporated

2.3.2 Bipolar ±2.5-V Supplies Configuration

To use the ADS126x with bipolar supplies, an additional external –5-V bench supply is required (not included). If a negative supply is not available, a positive 5-V supply capable of sinking current can be connected with reversed polarity.

First, configure the MMB0 in one of the configurations methods shown in Section 2.3.1.

Next, connect a –5-V supply to the –5VA net on terminal block J14, as shown in Figure 8.

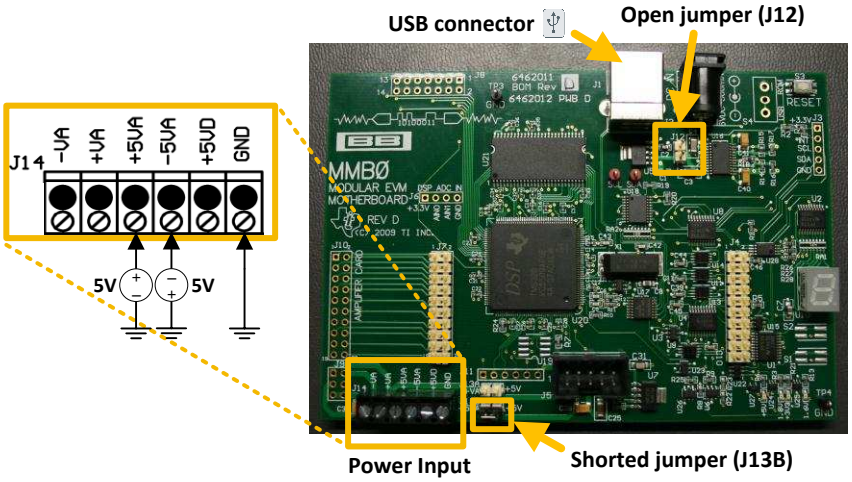

Figure 8. MMB0 Configuration for a Bipolar Bench Power Supply

After the MMB0 is configured, latch switch S2 (on the ADS126xEVM) into the 1-2 and 4-5 position (switched to the right) to select the bipolar supply.

NOTE: The ADS126xEVM uses the power supply connections from +5VA, -5VA, +3.3VD, and GND on the MMB0 board.

MMB0 jumper J13A has no effect on the circuit behavior of the ADS126xEVM as long as no other supply is connected to +VA. Do not short jumper J13A when another supply is connected to +VA.

Copyright © 2015, Texas Instruments Incorporated

2.4 ADC Clock Source Options

The ADS126x requires a master clock to operate the delta-sigma modulator. The clock frequency, f_{CLK}, is directly proportional to the modulator's sampling rate, f_{MOD} (= f_{CLK}/8). Consequently, the ADC output data rate follows the modulator sampling rate divided by the overall decimation ratio set by the digital filter. This clock can be supplied by the ADS126x internal oscillator, by the X1 crystal oscillator on the ADS126xEVM, or by an external clock source. The clock source is determined by switch **S1** and jumper **JP2**. Figure 9 shows the relevant clocking circuitry on the ADS126xEVM.

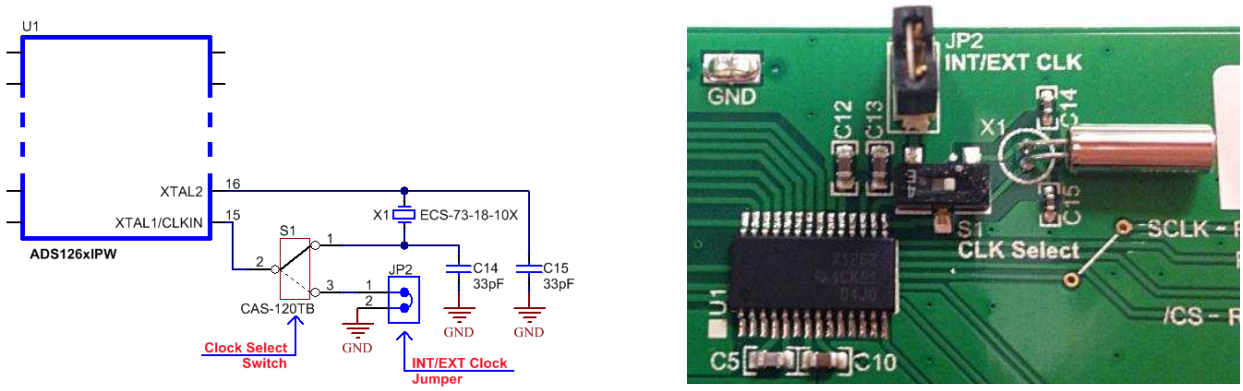

A) B)

Figure 9. A) Schematic of ADS126xEVM Clocking Circuitry and B) Clocking Components on the ADS126xEVM

Use one of the following clocking options:

1. **Onboard 7.3728 MHz Crystal Oscillator (Default Configuration)**

   The ADS126xEVM has an onboard crystal oscillator (component X1). The crystal oscillator clock is detected by the ADS126x when switch S1 is in the 1-2 position (switched to the right, as shown in Figure 9B).

2. **ADS126x Internal 7.3728 MHz Oscillator**

   The ADS126x selects the internal oscillator when no external clock is detected. To use this mode, ground the XTAL1/CLKIN input by switching S1 to the 2-3 position (switched to the left) and float the XTAL2 input by shorting jumper JP2.

3. **External Clock Source**

   If an alternate clock source or frequency is preferred, apply the external clock to the XTAL1/CLKIN input, and float XTAL2. The ADS126xEVM provides for this external clock connection. Remove jumper JP2 and apply the clock to the JP2 jumper posts. Configure switch S1 to the 2-3 position (switched to the left). The external clock source must have a frequency between 1 MHz and 8 MHz, and have a peak-to-peak amplitude equal to the DVDD supply voltage.

Copyright © 2015, Texas Instruments Incorporated

2.5 Digital Interface, J1

The J1 header (top) and socket (bottom) provide access to the digital controls and serial data pins of the ADS126x. These signals can be connected to a development platform for software development. All logic levels are referenced to the digital supply voltage (the MMB0 provides a 3.3-V digital supply to the ADS126xEVM through pin J5.9). Table 3 describes the **J1** serial interface pins.

Table 3. J1, Serial Interface Header

Function	Signal Name	Pin Number (J1)		Signal Name	Function
Unused		1	2	START	Start conversion control (100-kΩ pull-up)
SPI clock	SCLK	3	4	GND	Ground
Unused		5	6	$\overline{\text{RESET}}/\overline{\text{PWDN}}$	Reset (active low) or hold low to power-down the ADC (100-kΩ pull-up)
Serial port active low chip select (100-kΩ pull-up)	$\overline{\text{CS}}$	7	8		Unused
Unused		9	10	GND	Ground
Serial port data input	DIN	11	12		Unused
Serial port data output and data ready indicator (active low)	DOUT/$\overline{\text{DRDY}}$	13	14		Unused
Data ready indicator (active low)	$\overline{\text{DRDY}}$	15	16	SCL	I^2C clock (for EEPROM)
Unused		17	18	GND	Ground
Unused		19	20	SDA	I^2C data (for EEPROM)

NOTE: Keep all connections to the ADS126xEVM as short as possible. If jumper wiring is used to connect a software development board to the ADS126xEVM, keep a ground connection (wire) between boards close to all of the digital signals (wires). A large loop area between ground and digital signals creates inductive connections and poor signal integrity.

When probing SPI communications, check the signal integrity near the receiving end (that is, probe DIN at the ADS126x input, not at the SPI controller output).

Copyright © 2015, Texas Instruments Incorporated

2.6 Analog Inputs

The ADS126x has a total of 11 analog input pins: AIN0 through AIN9 plus a common reference input, AINCOM. This design allows the ADS126x to be configured for up to five differential input pairs, ten single-ended inputs referenced to a common voltage, or a combination of single-ended and differential inputs. The flexible input multiplexer of the ADS126x allows any two inputs to be selected for either the positive or negative ADC input.

When measuring single-ended input signals, any input pin may be used as a common voltage reference. However, AINCOM is specially designated to serve this purpose because it provides a bias voltage (level-shift function) for floating sensors to meet the common-mode voltage requirements of the ADS126x inputs.

All of the analog inputs to the ADC are pinned out on the ADS126xEVM. The supporting circuitry provides filtering and ratiometric connections for a variety of sensors. Additionally, a separate terminal block (J4) is provided for thermocouple inputs. Figure 10 shows the schematic of the ADS126xEVM analog input circuitry.

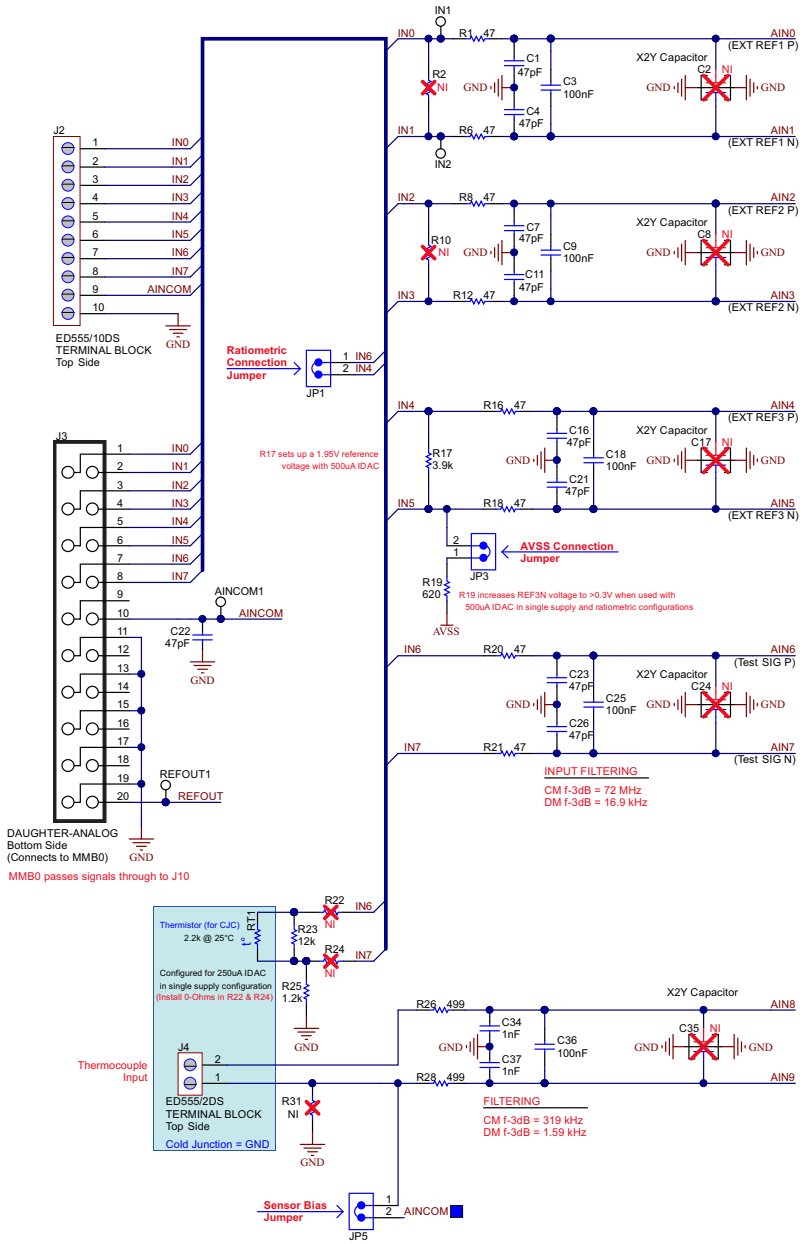

Figure 10. Analog Input Support Circuitry on the ADS126xEVM

Copyright © 2015, Texas Instruments Incorporated

2.6.1 ADS126x Integrated Input Functions

The ADS1262 and ADS1263 provide several integrated functions on the analog inputs to support many applications. Table 4 summarizes the functions available on each input pin.

Table 4. ADS126x Analog Input Pin Functions

Input Pin	ADC Input	IDAC Output	VBIAS Output	External REF Input	Test DAC Output	GPIO
AIN0	yes	yes	-	REF1 P	-	-
AIN1	yes	yes	-	REF1 N	-	-
AIN2	yes	yes	-	REF2 P	-	-
AIN3	yes	yes	-	REF2 N	-	yes
AIN4	yes	yes	-	REF3 P	-	yes
AIN5	yes	yes	-	REF3 N	-	yes
AIN6	yes	yes	-	-	yes	yes
AIN7	yes	yes	-	-	yes	yes
AIN8	yes	yes	-	-	-	yes
AIN9	yes	yes	-	-	-	yes
AINCOM	yes	yes	yes	-	-	yes

2.6.1.1 ADC Inputs

The ADS126x has a flexible input multiplexer with 11 analog inputs. Any of the inputs can connect to the positive input and any input can connect to the negative input. (Additionally, the ADS1263 has a second ADC with an independent flexible input multiplexer to all input pins). Configure the inputs to provide either single-ended or differential input measurements. The input multiplexer can also connect to several internal signals. The internal signals are the temperature sensor, test DAC, analog power supply ([AVDD – AVSS] / 4), and digital power supply ([DVDD – DGND] / 4). Use the internal signals for ADC and system functional verification or as part of an ADC diagnostic routine.

2.6.1.2 IDAC Output

The ADS126x provides dual matched current sources (IDAC1 and IDAC2) for biasing of resistive temperature devices (RTDs), thermistors and other resistive based sensors. The IDACs can be independently programmed and can be connected to any analog input. Each IDAC is programmable over the range of 50 µA to 3000 µA. The internal reference must be enabled for IDAC operation.

2.6.1.3 VBIAS Output

The analog power supply is either a single or bipolar supply. For single-supply operation, the level shift function (VBIAS) can offset the common input voltage on AINCOM to a midsupply voltage ([AVDD + AVSS] / 2).

2.6.1.4 External REF Input

The ADC126x accepts external references (in addition to the internal and supply reference options). The external reference inputs are shared with pins AIN0 through AIN5. ADC2 (on the ADS1263) selects a different reference source other than the primary ADC.

2.6.1.5 Test DAC Output

Inputs AIN6 and AIN7 are programmable to output the internal test DAC voltage. The test signal output is unbuffered; do not externally load.

2.6.1.6 GPIO

Eight inputs (AIN3 through AINCOM) are configurable as general-purpose input/outputs (GPIO). The GPIO voltages are referenced to the analog power supply (AVDD and AVSS); therefore, the GPIOs must use 5-V logic. The GPIOs are useful for control of external devices, as well as reading external logic signals.

Copyright © 2015, Texas Instruments Incorporated

2.6.2 Using the ADS126xEVM for Ratiometric Measurements

Ratiometric measurements are often used with resistive-type sensors requiring a current excitation source (such as an RTD). The current is forced through the resistive sensor to generate a voltage signal for the ADC input. If the current source deviates from the programmed value (because of drift or noise), an apparent change in resistance is observed by the ADC. To correct for this error, the current source is also forced through a precision resistor to generate the ADC reference voltage. In this ratiometric configuration, a change in current directly affects the ADC input signal and reference voltage proportionally. Therefore, the ratio of the input signal to reference voltage remains constant for a given sensor impedance.

A simple block diagram of a ratiometric connection, using a 3-wire RTD with the ADS126xEVM, is shown in Figure 11. The 3-wire RTD is connected to the J2 header on inputs IN7, IN6, and IN4. Two IDACs output 250 µA (each) on pins AINCOM and AIN3 of the ADS126x. Jumper wires then connect IN7 to COM, and IN6 to IN3. These jumper wires route the IDAC currents around the input filtering to prevent voltage drops in the input signal path. IDAC current flow thought the R17 resistor, between IN4 and IN5, to provide the ratiometric voltage reference. IDAC currents are routed to AVSS through JP3, or directly to ground by connecting another jumper wire between IN5 and GND.

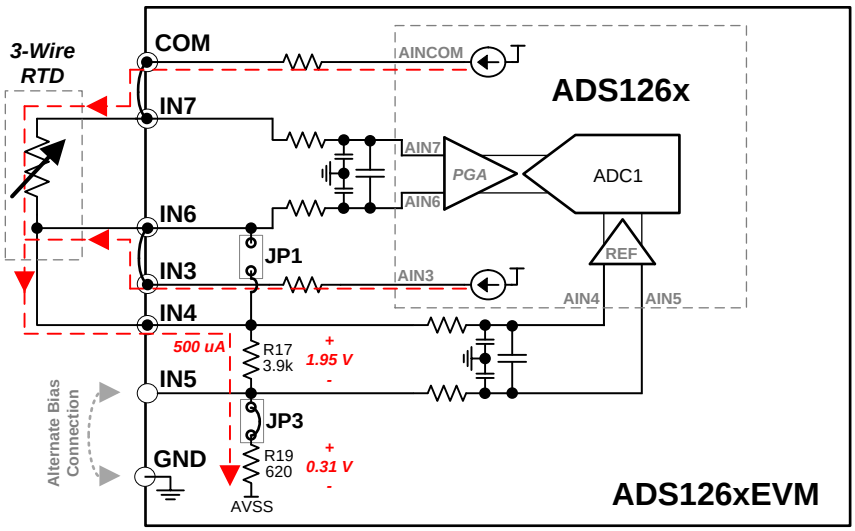

Figure 11. ADS126xEVM Ratiometric Connection Example

NOTE: The purpose of R19 is to boost up the negative reference voltage when using a single-supply configuration. However, the ADS126x allows for the negative reference voltage to be connected directly to AVSS (when used with a bipolar supply) or GND potential (when used with a single supply). Short R19 or replace with a 0-Ω resistor to allow additional headroom for the IDAC compliance voltage.

Although this example shows a 3-wire RTD, the ADS126x can also support 2- or 4-wire RTDs. For a 2-wire RTD, use JP1 to replace the IN4 connection. For a 4-wire RTD, remove the IN6 to IN3 jumper wire, remove the IN7 to COM jumper wire, and connect the additional RTD wire to COM.

Copyright © 2015, Texas Instruments Incorporated

2.6.3 Thermocouple Input

Terminal block J4, shown in Figure 12, connects to inputs AIN8 and AIN9 on the ADS126x. The terminal block is surrounded by a cutout ground plane polygon to provide partial thermal isolation for thermocouple inputs. Thermocouples can be biased either by enabling the VBIAS level shifter and shorting jumper JP5, or by enabling the 1-MΩ pull-up and pull-down resistors inside the ADS126x.

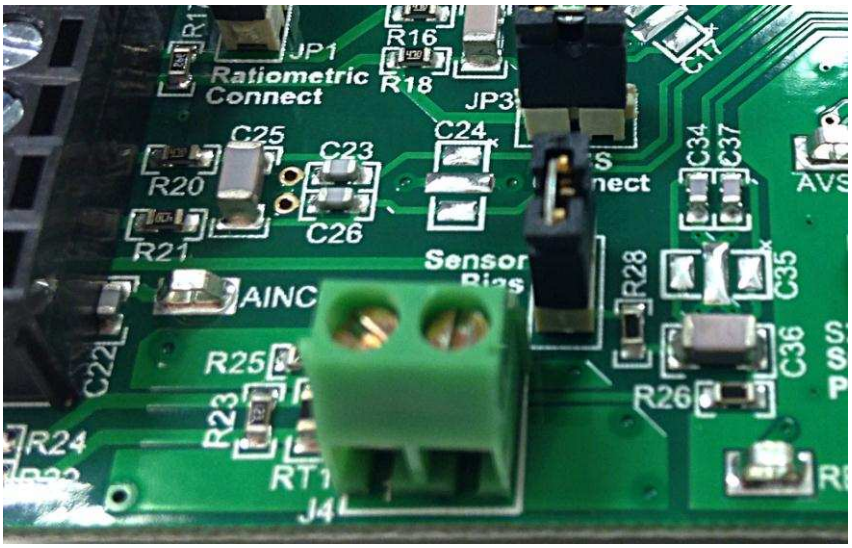

Figure 12. J4 Thermocouple Input

Cold junction compensation of the thermocouple is implemented by the thermistor on RT1 to measure the cold junction temperature. Install 0-Ω resistors on R22 and R24 (0603 surface-mount pads) to connect RT1 to inputs AIN6 and AIN7 on the ADS126x. R23 is in parallel with RT1 for linearization of the thermistor resistance versus temperature transfer function.

NOTE: Do not use the IN6 and IN7 inputs on terminal block J2 if components are soldered to R22 or R24. Interaction between components causes measurement error.

2.6.4 X2Y® Capacitor Footprints

Capacitors C2, C8, C17, C24, and C35 are unpopulated footprints reserved for 0603 X2Y capacitors. X2Y capacitors can replace the multiple capacitors (C1, C3, and C4 for example) required for common-mode and differential filtering. In addition to the board space saved by using X2Y, these capacitors have lower ESL and excellent common-mode capacitor matching.

Copyright © 2015, Texas Instruments Incorporated

3 ADS126xEVM Software

This section explains setup and use of the ADS126xEVM software. Software setup requires installing ADCPro (a tool used to acquire and analyze ADC data), and installing an EVM specific plugin to use within ADCPro. Download the ADCPro user's guide from http://www.ti.com/lit/ug/sbau128c/sbau128c.pdf.

3.1 ADCPro and ADS126xEVM Plugin Installation

1. **Install ADCPro**

   Download the ADCPro installer from http://www.ti.com/adcpro. The ADCPro Hardware and Software Installation Manual provides a step-by-step installation procedure. Install ADCPro first before installing the ADS126xEVM plugin.

2. **Install the ADS126xEVM Plugin**

   Download the ADS126xEVM plugin installer from http://www.ti.com/tool/ads1262evm-pdk or http://www.ti.com/tool/ads1263evm-pdk. Run the ADS126x plugin installer after installing ADCPro.

NOTE: The ADS126xEVM plugin installer runs an additional installation for the USBStyx driver required to communicate with the MMB0. If the software is unable to connect to the EVM, this driver may not have properly installed. This driver may be reinstalled with one of the installers located at ftp://ftp.ti.com/pub/data_acquisition/ADCPro2/misc/drivers/. Use the installer version (32- or 64-bit) that corresponds to the version of your operating system.

3.2 Connecting the Hardware

After ADCPro and the ADS126xEVM plugin have been installed, connect the hardware, and then run ADCPro.

To connect the hardware, follow these steps:

1. If disconnected, connect the ADS126xEVM daughter card to the MMB0 motherboard while powered off (as shown in Figure 2).
2. Check and configure jumper and switch settings on the MMB0 and ADS126xEVM, as described in Section 2.3.
3. Connect any sensors or external test circuitry to the ADS126xEVM.
4. Connect the USB cable from the MMB0 to the computer.
5. Power up the MMB0 (and ADS126xEVM) with the included wall adapter or an external bench supply.
6. After powering up the MMB0 and ADS126xEVM, power up any other external circuitry.
7. Run ADCPro and follow the steps in Section 3.3 to communicate with the ADS126xEVM.

Copyright © 2015, Texas Instruments Incorporated

3.3 Using ADCPro with the ADS126xEVM

For more information about ADCPro than is provided in this document, refer to the ADCPro User's Guide, SBAU128. This section covers only the functionality of the ADS126xEVM plugin. After the hardware is connected, powered up, and ADCPro is running, follow these steps to establish communication with the ADS126xEVM:

1. Load the ADS126xEVM plugin by clicking *ADS126XEVM* from the *EVM* file menu shown in Figure 13. This step can be repeated to reload the plugin. The plugin may need to be reloaded in the case of a communication failure or if power is cycled on the EVM hardware.

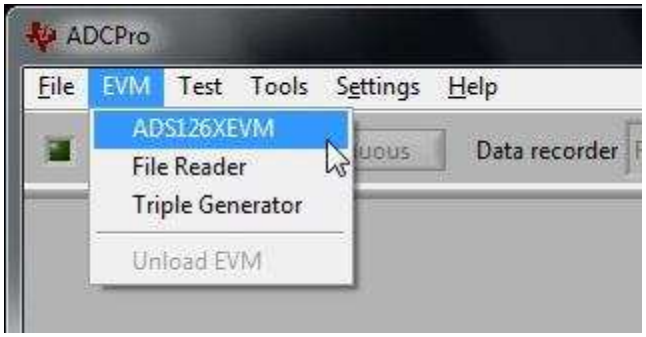

Figure 13. Loading the ADS1262EVM Plugin in ADCPro

2. Wait for the *Connected to EVM* status seen in Figure 14. If the connection fails, reset the hardware either by pushing the reset button in the upper right corner of the MMB0 or by cycling MMB0 power. If a connection cannot be established after resetting the MMB0, refer back to Section 3.1 and Section 3.2 for the required drivers and hardware connections.

Figure 14. EVM Connection Status

Copyright © 2015, Texas Instruments Incorporated

3. Configure the ADS126x. The ADS126xEVM plugin is divided into ten tabs, as shown inFigure 15. Clicking on a tab changes the displayed controls. The controls on each tab are described in Section 3.4.

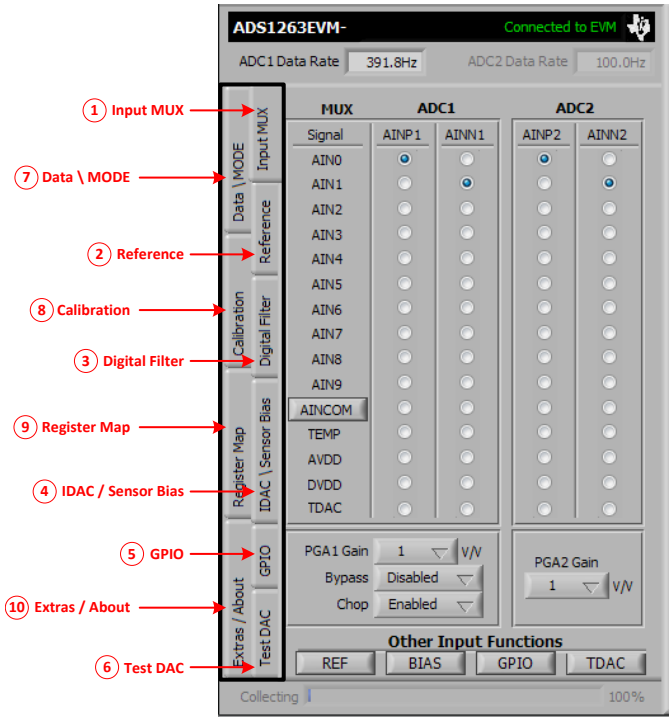

Figure 15. ADS1262EVM Plugin Tabs

4. Select a test plugin from the *Test* file menu, as shown in Figure 16. This step may precede steps 1 to 3, but is required before acquiring data in the next step.

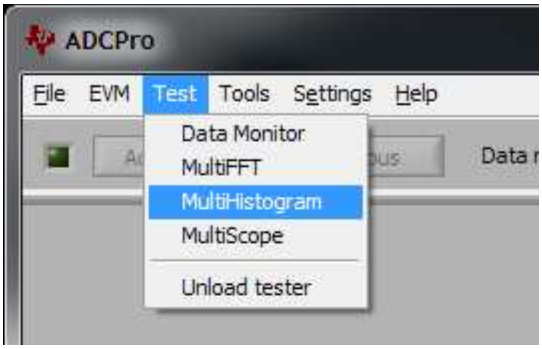

Figure 16. Loading a Test Plugin in ADCPro

5. Acquire data by clicking the *Acquire* or *Continuous* button (previously shown in Figure 14). These buttons are only operational when both the EVM and test plugins are loaded. Clicking *Acquire* captures a single block of data. Clicking *Continuous* captures blocks of data repeatedly. The block size is configured in the test plugin.
6. Use the test plugin functions as described in the ADCPro User's Guide, SBAU128, to analyze the ADC conversion data.

Copyright © 2015, Texas Instruments Incorporated

3.4 Using the ADS126xEVM Plugin

This section describes the controls in the ADS126xEVM plugin. Additional details about specific ADS126x functions can be found in the ADS1262 and ADS1263 data sheet, SBAS661.

3.4.1 Tab 1: Input MUX

The controls on tab 1 select the ADC inputs from the internal multiplexer (mux) and control the PGA settings. Click the radio buttons to independently select the positive (AINPx) and negative (AINNx) ADC inputs. Clicking the TEMP, AVDD, DVDD, or TDAC special function inputs selects that function for both inputs, and configures the PGA as recommended. Note that the *ADC2* radio buttons are only visible when an ADS1263EVM is connected.

Clicking the *AINCOM* button enables the VBIAS level shifter. Both the VBIAS level shifter and *Chop* functions can be configured on tab 1 and tab 4 (*IDAC \ Sensor Bias*).

To test the ADC noise performance, select the same input signal for AINP and AINN to internally short the ADC inputs. Remember to set a proper common-mode input voltage by applying an external midsupply voltage or by using the VBIAS function on AINCOM, as shown in Figure 17.

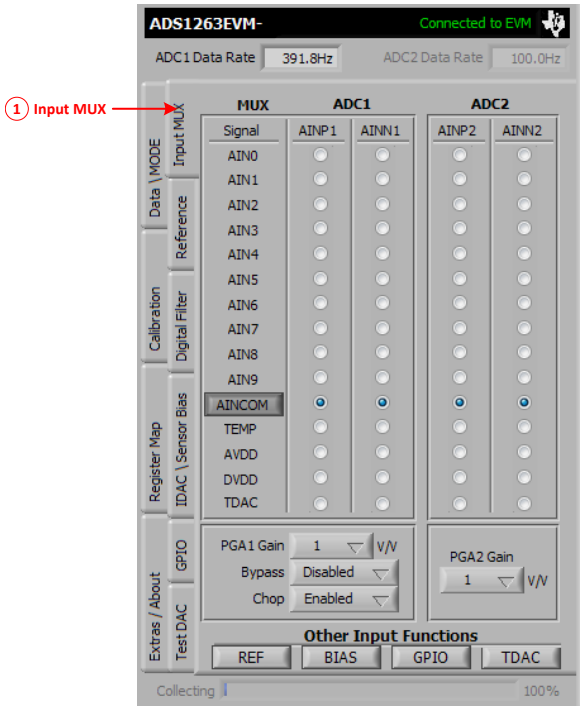

Figure 17. Tab 1 Settings

Copyright © 2015, Texas Instruments Incorporated

3.4.2 Tab 2: Reference

Figure 18 shows the tab used to configure the ADCx reference source. The voltage reference source is selected from the *ADCx REF Source* drop-down menu. When using an external source for ADC1, the positive and negative reference inputs must be specified by the *REFP* and *REFN* drop-down menus. Selecting the *Invert ADC1 REF Inputs* checkbox swaps the positive and negative reference inputs, and allows for fully flexible reference source inputs.

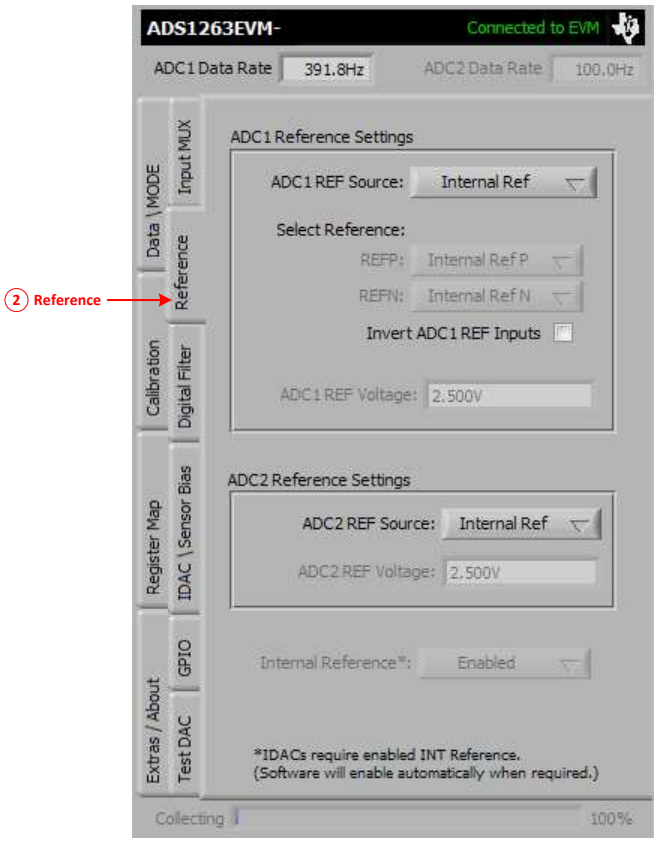

Figure 18. Tab 2 Settings

When using an external reference source for ADC1, also make sure that the *ADC1 REF Voltage* field is matched to the applied reference voltage to allow ADCPro to correctly convert the output data from codes to volts. The internal reference can be disabled when an external referenced is used; however, the internal reference must be enabled to use the IDACs.

The *ADC2 Reference Settings* are only visible when an ADS1263EVM is connected.

Copyright © 2015, Texas Instruments Incorporated

3.4.3 Tab 3: Digital Filter

Tab 3 contains the filter and data rate selection controls, as shown in Figure 19.

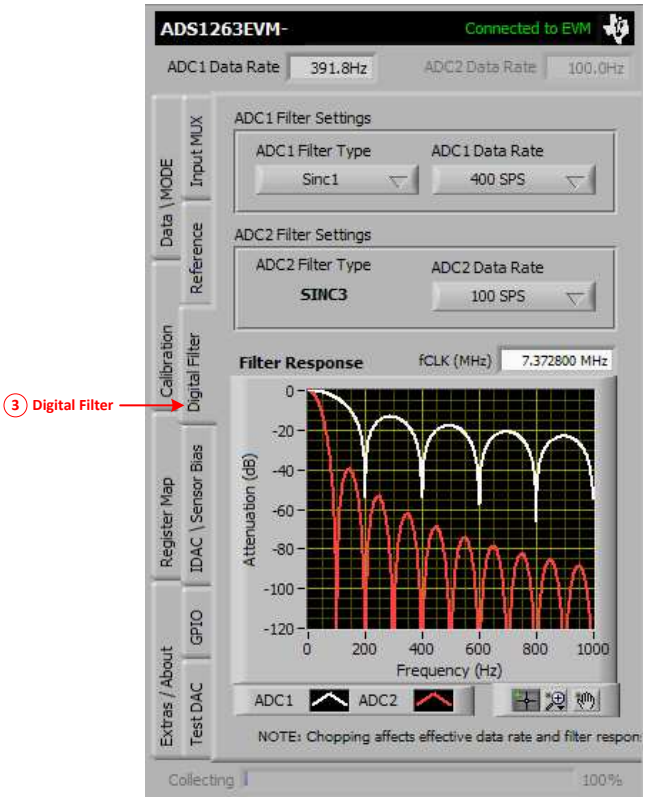

Figure 19. Tab 3 Settings

The *ADC1 Filter Settings* section controls both the digital filter type and the data rate for ADC1. When the *FIR* filter is selected, data rates are limited to frequencies that support 50-Hz or 60-Hz line cycle rejection. Note that because of speed limitations within the firmware, the 19.2 kSPS and 38.4 kSPS data rates are only available when *Data Collection Mode* is set to *ADC1* on Tab 7 (*Data \ MODE*).

The *ADC2 Filter Settings* controls are shown only when an ADS1263EVM is connected. The SINC3 filter is the only filter available for ADC2.

NOTE: Data from ADC2 are only collected when *Data Collection Mode* is set to *ADC1 + ADC2* on Tab 7 (*Data \ MODE*).

ADC2 Data Rate must be at least ½ the *ADC1 Data Rate* setting because the firmware only polls for new ADC2 data when an ADC1 conversion completes. Setting the *ADC2 Data Rate* much slower than ½ the *ADC1 Data Rate* may require a much longer collection time.

ADC1 and ADC2 do not sample simultaneously.

Changing ADC filter and data rate settings, the chopping settings on tab 4 (*IDAC \ Sensor Bias*), or the *fCLK* control, updates the *Filter Response* plot. This plot can be scaled by the controls below the plot or by clicking and typing a new value into an existing axis value.

NOTE: Make sure that the *fCLK* frequency input is correct (there is no need to modify fCLK when using the ADS126x internal oscillator or the ADS126xEVM's default X1 crystal).

The *fCLK* frequency affects the calculated *ADC1 Data Rate* and *ADC2 Data Rate* indicators that are also used by the software when acquiring data, plotting the filter response, or calculating the FFT in the *MultiFFT* test plugin.

Copyright © 2015, Texas Instruments Incorporated

3.4.4 Tab 4: IDAC / Sensor Bias

Figure 20 shows the *IDAC \ Sensor Bias* tab controls. The *IDAC Configuration* controls configure the IDAC direction, magnitude, and rotation. The IDACs require the internal reference to be enabled on tab 2 (*Reference*).

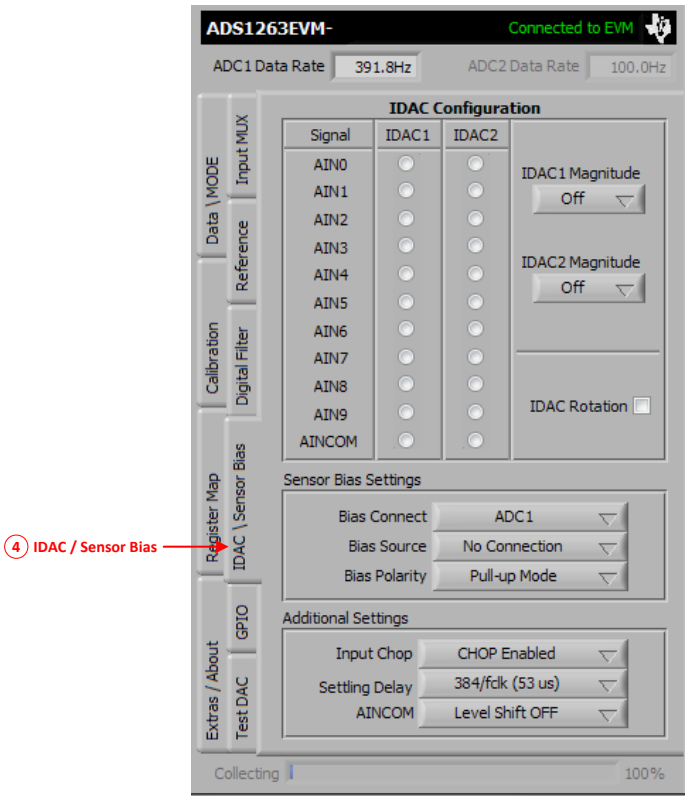

Figure 20. Tab 4 Settings

The *Sensor Bias Settings* controls are used to enable burnout current sources or bias resistor connections prior to ADC1 (or ADC2) for detecting sensor open circuits or biasing floating sensors. Only use burnout current sources to verify the sensor connection. For best results, disable the burnout current source after the sensor connection is verified and before measuring the sensor output. Make sure to account for the analog filter settling time when enabling or disabling the burnout current source.

The *Additional Settings* controls configure other sensor bias-related functions:

Input Chop— enables or disables the global input chop feature of the ADS126x.

When enabled, input chopping reduces offset and offset drift errors.

Settling Delay— configures the initial conversion delay before ADC1 begins converting.

The default settling delay provides time for PGA1 to settle when a step input occurs.

AINCOM Bias— enables or disables the mid-supply level-shift function on the AINCOM pin

Input Chop and *AINCOM* are duplicated on tab 1 (*Input MUX*) for quick access.

NOTE: The software does not allow for simultaneous GPIO, Test DAC, IDAC, or VBIAS functions to be enabled on the same pin.

Copyright © 2015, Texas Instruments Incorporated

3.4.5 Tab 5: GPIO

Tab 5, shown in Figure 21, controls the GPIO functions available on the AIN3-AIN9 and AINCOM pins. The *GPIO Functions* controls select the GPIO direction and logic value. Note that the GPIO logic levels are referenced to the analog supply voltage (5V-logic). The *Value* radio buttons serve dual purposes as both controls and indicators. *Value* indicates the logic value when configured as an input, and controls the logic value when configured as an output. The *Value* buttons are grayed out until the GPIO function is enabled on the respective channel. Controlling the GPIO value does nothing when configured as an input.

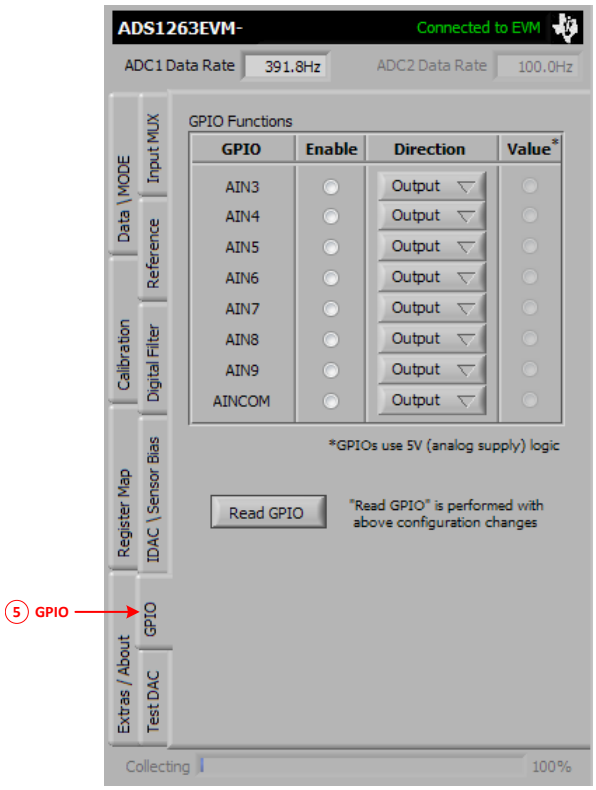

Figure 21. Tab 5 Settings

Clicking *Read GPIO* or modifying any of controls on this tab reads the GPIODAT register and updates all value indicators.

NOTE: The GPIODAT register bits corresponding to GPIO inputs are *read*-only, and the GPIODAT register bits corresponding to GPIO outputs are *write*-only. Therefore, you cannot read back any GPIO output values from the GPIODAT register.

Store a copy of the GPIODAT register settings in memory (as this software does) in order to recall the GPIO output configuration from memory.

NOTE: The software does not allow for simultaneous GPIO, Test DAC, IDAC, or VBIAS functions to be enabled on the same pin.

Copyright © 2015, Texas Instruments Incorporated

3.4.6 Tab 6: Test DAC

The *Test DAC* tab, as shown in Figure 20, controls the internal test DAC and is used to verify ADC functionality by providing a known dc input voltage. The test DAC has two resistor divider taps that select a fraction of the supply voltage. To use the test DAC, first select the *Pos. Test Signal Supply Ratio* and *Neg. Test Signal Supply Ratio* settings, and then connect the test DAC to ADC1, ADC2, or both, with the *Test DAC to ADCx* controls or with the MUX controls on tab 1 (*Input MUX*). Additionally, the test DAC voltages are provided as outputs on pins AIN6 and AIN7 to be measured externally.

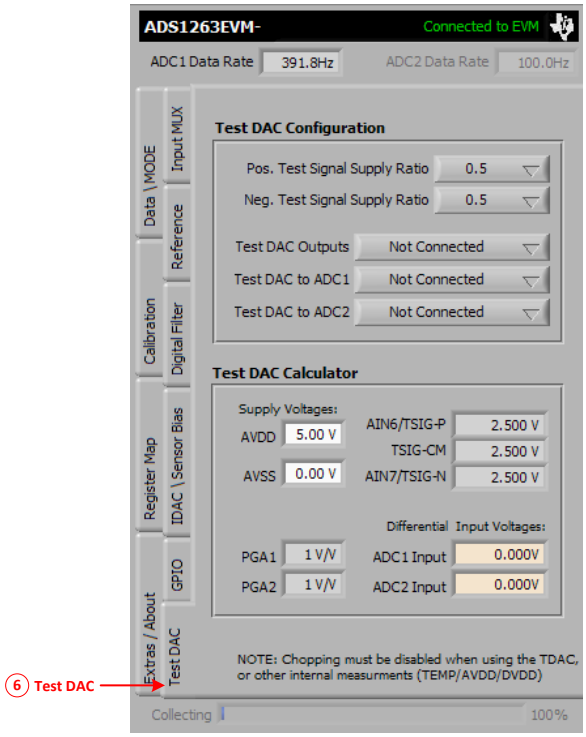

Figure 22. Tab 6 Settings

The *Test DAC Calculator* is provided to calculate the test DAC output and ADC input voltages based on the supply ratios, AVDD, AVSS, and PGA gain settings. As an example, using the following settings:

- Pos. Test Signal Supply Ratio = 0.525
- Neg. Test Signal Supply Ratio = 0.475
- Test DAC to ADC1 = Input to ADC1 (to select the Test DAC as the input source for ADC1)
- PGA1 Gain = 1 V/V (on tab 1)

For a supply voltage of 5 V (AVDD – AVSS), the test DAC outputs (5 V) × (0.525 V – 0.475 V) × (1 V/V) = 0.25 V to ADC1.

To output or measure the test DAC voltage externally, set the *Test Signal Outputs* drop-down menu to *Connected to AIN6/AIN7*.

NOTE: The test DAC is susceptible to power supply noise. Allow a sufficient margin of error when verifying ADC conversion results with the test DAC.

Create a ratiometric measurement of the test DAC by selecting the analog supply as the voltage reference source for the ADC. Then the matching input and reference noise cancels in the ADC conversion result.

NOTE: The software does not allow for simultaneous GPIO, Test DAC, IDAC, or VBIAS functions to be enabled on the same pin.

Copyright © 2015, Texas Instruments Incorporated

3.4.7 Tab 7: Data \ MODE (ADS1263 only)

Use tab 7, as shown in Figure 23, to enable or disable ADC2 data collection, and select whether ADC1 or ADC2 data are displayed in the test plugin. This tab is only visible when the ADS1263EVM is connected.

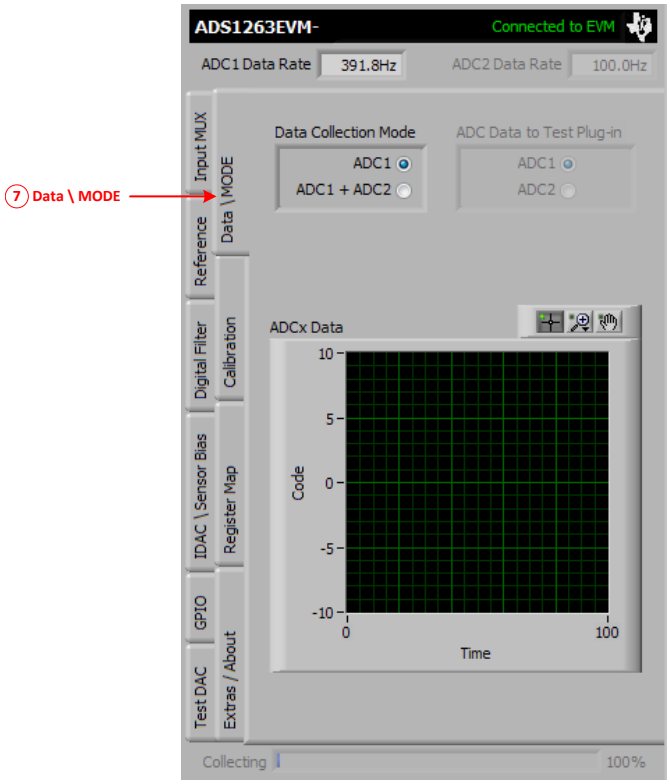

Figure 23. Tab 7 Settings

To start ADC2 conversions and read back data from ADC2, *Data Collection Mode* must be set to *ADC1 + ADC2*. This setting enables the *ADC Data to Test Plug-in* control. The *ADC Data to Test Plug-in* controls whether data from ADC1 or ADC2 appear in the test plugin for evaluation.

ADC1 and ADC2 data do not have the same LSB size and likely contain different sample sizes; therefore, the software is only able to evaluate one data set at a time. If *ADC1* is selected in the *ADC Data to Test Plug-in* section, ADC1 data appear in the test plugin panel to the right, and the *ADCx Data* graph displays data from ADC2. Conversely, if *ADC2* is selected in the *ADC Data to Test Plug-in* control, ADC2 data appear in the test plugin panel, and ADC1 data appear in the *ADCx Data* graph. However, it is possible to switch between ADC1 and ADC2 data sets in the test plugin without having to reacquire new data. After acquiring ADC1 and ADC2 data (with *Data Collection Mode* set to *ADC1 + ADC2*), switch *ADC Data to Test Plug-in* to the other ADC. A button with the text *Swap EVM & Test Plugin Data?* appears. Click the *Swap EVM & Test Plugin Data?* button and then click *Acquire*. This procedure takes the existing ADC data sets and swaps them between the *ADCx Data* graph and the test plugin.

NOTE: In ADCPro, when *Data Collection Mode* is set to *ADC1 + ADC2*, the data rate for ADC1 must be greater than or equal to two times the ADC2 data rate.

The firmware must poll the STATUS byte for new ADC2 data every time new ADC1 data are ready. ADC1 data are ready when the $\overline{\text{DRDY}}$ signal goes low, but there is no $\overline{\text{DRDY}}$ signal to indicate that new ADC2 is ready. As a result of this behavior, ADC2 data are lost if this requirement is not satisfied.

Copyright © 2015, Texas Instruments Incorporated

3.4.8 Tab 8: Calibration

Tab 8 (shown in Figure 24) allows for reading and writing of the offset and full-scale (gain) calibration registers. The ADC2 offset and gain calibration registers are only available when the ADS1263EVM is connected.

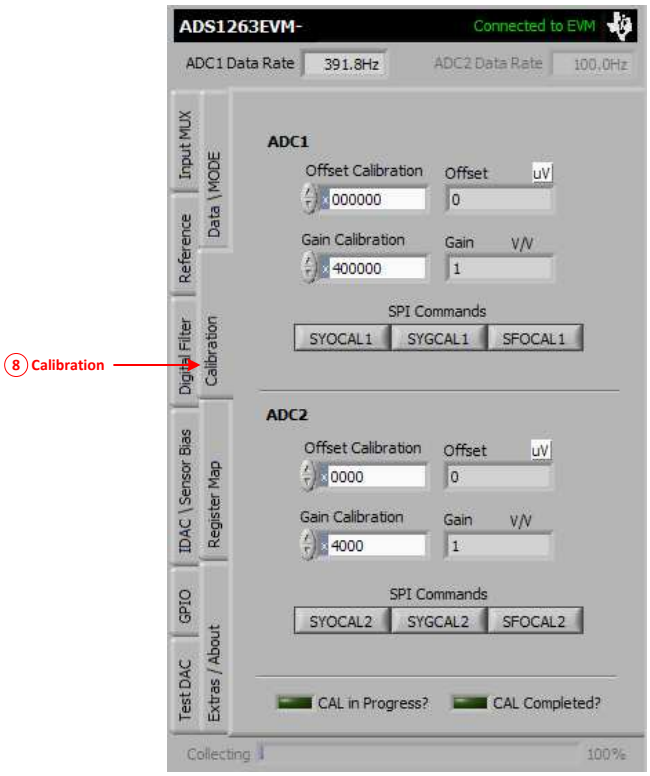

Figure 24. Tab 8: Register Map

Program the calibration coefficients manually into the registers, or send the corresponding SPI calibration command. Click an SPI command button to run the selected calibration routine. During a calibration routine, *CAL in Progress?* lights up to show that the calibration process is ongoing. If the calibration completes successfully, *CAL Completed?* lights up. If *CAL Completed?* does not light up, run the calibration again.

The calibration coefficients are converted to their practical units in the *Offset* and *Gain* indicators. Note that the units of *Offset* can be changed from *uV* to *mV* as needed.

Calibration is not required; however, calibration improves overall ADC accuracy by about an order of magnitude.

Copyright © 2015, Texas Instruments Incorporated

3.4.9 Tab 9: Register Map

Use tab 9 (shown in Figure 25) to read and display the current ADS126x register settings. This tab is useful to see how device settings in the ADCPro software are stored in the ADS126x device registers.

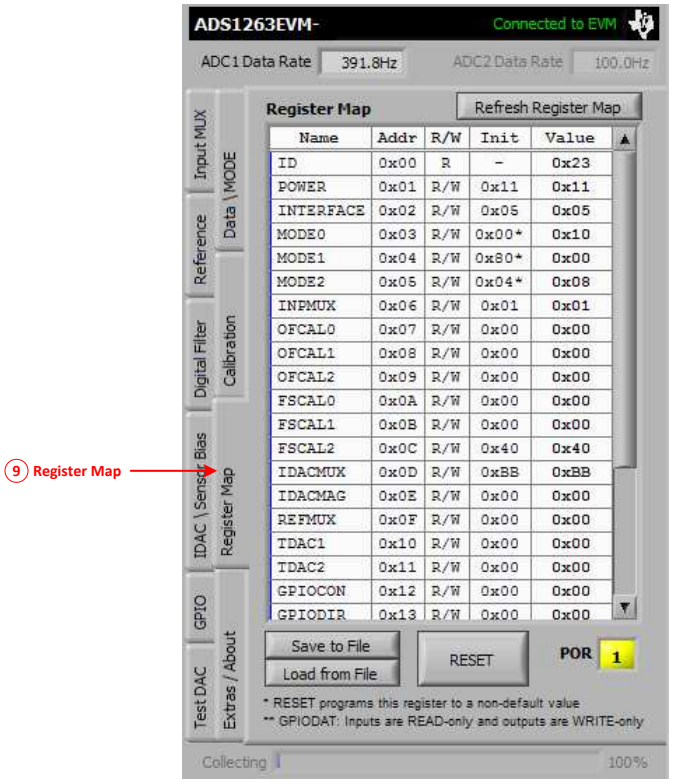

Figure 25. Tab 9: Register Map

Reading back the ADC registers is recommended in all applications to make sure that the ADC settings are correct and match software assumptions. When the *Register Map* tab is selected or the *Refresh Register Map* button is clicked; all the device registers are read, the Register Map table is updated, and all ADC controls (on all tabs) are updated. The *RESET* button reverts all register settings back to the ADCPro nominal values.

NOTE: The *RESET* button reverts all ADS126x register settings to a nominal state, as determined by ADCPro. This nominal state programs the MODE0, MODE1, MODE2, and ADC2CFG (when applicable) registers to nondefault ADS126x values (indicated by asterisks in the register map table).

To revert all register settings back to the true ADS126x default values, use the $\overline{\text{RESET}}$ pin control button on tab 10 (*Extras / About*).

Device settings such as the conversion control and STATUS/CRC byte configurations are enforced by software to ensure proper communication between hardware and firmware.

The power-on reset (POR) function is also helpful in verifying correct device operation. The *POR* button, at the bottom of this tab, displays the current value of the POR bit in the POWER register. When clicked, the *POR* button toggles the value of the POR bit.

Save the register settings to a text file with the *Save to File* button. Recall register settings with the *Load from File* button. Use this register map text file to document a particular setup. Reference this text file during development or support on the E2E™ Precision Data Converter Forum.

Copyright © 2015, Texas Instruments Incorporated

3.4.10 Tab 10: Extra / About

Tab 10 (Figure 26) is the last page with several useful controls.

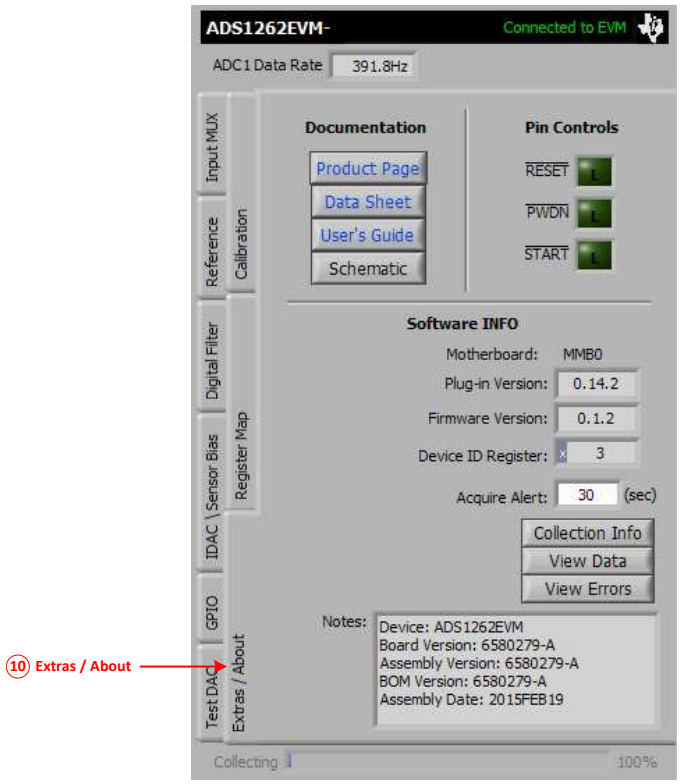

Figure 26. Tab 10: Extras / About

The *Documentation* section of this tab provides quick access to support documents. *Product Page*, *Data Sheet*, and *User's Guide* connect to the latest online documentation. *Schematic* opens a local copy of the ADS126xEVM schematic.

The *Pin Controls* section is used to control the $\overline{\text{RESET}}$/$\overline{\text{PWDN}}$ and $\overline{\text{START}}$ pin logic levels. Clicking on any of these buttons toggles the logic levels, with the exception of the *$\overline{\text{RESET}}$* button. The *$\overline{\text{RESET}}$* button pulses the $\overline{\text{RESET}}$/$\overline{\text{PWDN}}$ pin and resets all register settings back to their default values.

The *Software INFO* section provides additional information about the software and hardware, as well as some other useful diagnostic tools.

- *Acquire Alert* is a programmable acquisition-time alert. A pop up alerts the user when a data acquisition is estimated to take longer than the programmed alert value. The pop up notifies the user of the estimated acquisition time and provides the option to continue or cancel the acquisition. Cancelling an acquisition in progress requires resetting the hardware and reloading the EVM plugin. Long acquisition periods are possible because of the very low data rates of the ADS126x and large allowable block sizes in ADCPro.
- *Collection Info* shows information about the number of samples collected from ADC1 and ADC2. If data acquisition seems to be taking longer than expected, check that the actual number of samples being collected accounts for the additional time. The number is slightly larger than the block size requested in the test plugin. Reduce the number of samples or increase the ADC data rates to reduce acquisition time. The acquisition time may be longer than the total number of samples divided by the data rate because the data is first collected into MMB0 memory, then transferred to ADCPro using USB, and finally processed in ADCPro before it is displayed.

Copyright © 2015, Texas Instruments Incorporated

- *View Data* reveals a data monitor that shows the raw ADC codes along with the STATUS and CHECKSUM/CRC bytes, as shown in Figure 27.

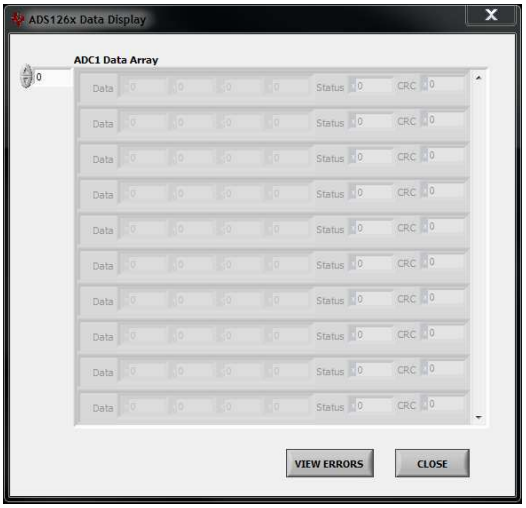

Figure 27. Data Monitor Window

- *View Errors* reveals a STATUS byte error indicator that ORs all of the STATUS byte error flags to check if any errors occurred in the previous acquisition, as shown in Figure 28. This window automatically appears when an error flag is found in the acquired data set. Switching to the *View Data* window is useful to see when this error first appeared in the collected data.

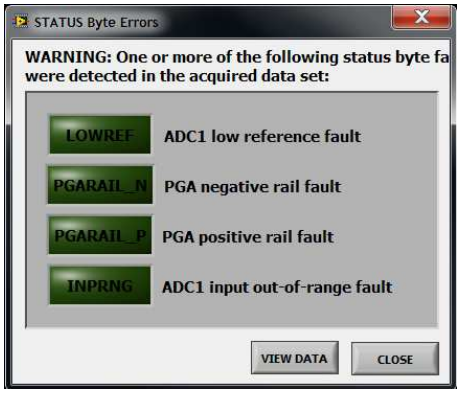

Figure 28. Status Byte Error Pop-up

Copyright © 2015, Texas Instruments Incorporated

4 ADS126xEVM Bill of Materials and Schematic

A complete schematic for the ADS126xEVM is appended to this user's guide. The bill of materials is provided in Table 5. Gerber files are available on request. Please email support@ti.com or visit the E2E Community Forums and ask for details on how to receive the files.

4.1 Bill of Materials

NOTE: All components should be compliant with the European Union Restriction on Use of Hazardous Substances (RoHS) Directive. Some part numbers may be either leaded or RoHS. Verify that purchased components are RoHS-compliant. (For more information about TI's position on RoHS compliance, see the http://www.ti.com.)

Table 5. ADS126xEVM Bill of Materials

Item No.	Qty	Value	Ref Des	Description	Manufacturer	Part Number
1	11		-5V Input, AINCOM, AVDD, AVSS, DVDD, GND, GND, GND, IN0, IN1, REFOUT	PC TEST POINT MINIATURE SMT	Keystone Electronics	5015
2	9	47 pF	C1, C4, C7, C11, C16, C21-23, C26	CAP, CERM, 47 pF, 50V, NP0, 1%, 0603	TDK	C1608C0G1H470F080AA
3	5[(1)]	NI	C2, C8, C17, C24, C35	CAP, NI, X2Y		
4	5	0.1 uF	C3, C9, C18, C25, C36	CAP, CERM, 100 nF, 50V, NP0, +/-5%, 1206	TDK	C3216C0G1H104J160AA
5	1	4,700 pF	C5	CAP, CERM, 4.7 nF, 50V, NP0, 5%, 0603	TDK	C1608C0G1H472J080AA
6	6	1 uF	C6, C10, C12, C13, C27, C32	CAP, CERM, 1 uF, 16V, X7R +/-10%, 0603	TDK	C1608X7R1C105K080AC
7	2	33 pF	C14, C15	CAP, CERM, 33 pF, 50V, NP0, +/-5%, 0402	Yageo	CC0402JRNPO9BN330
8	2	10,000 pF	C19, C20	CAP, CERM, 0.01 uF, 50V, X7R, +/-10%, 0402	Yageo	CC0402KRX7R9BB103
9	2	0.1 uF	C28, C33	CAP, CERM, 100 nF, 50V, X7R +/-10%, 0603	TDK	C1608X7R1H104K
10	3	10 uF	C29-31	CAP, CERM, 10 uF, 16V, X7R +/-20%, 1206	TDK	C3216X7R1C106M
11	2	1,000 pF	C34, C37	CAP, CERM, 1 nF, 100V, NP0, 1%, 0603	TDK	C1608C0G2A102F080AA
12	1		D1	DIODE, ZENER, 6.2V, 500mW, SOD-123	Diodes Inc.	DDZ6V2B-7
13	1		J1 (TOP SIDE)	HEADER, 20POS 10x2, 100mil, SMD, GOLD	Samtec	TSM-110-01-L-DV-P
14	2		J1 (BOTTOM SIDE), J3	CONN, FEMALE, 20POS DL, 100mil, SMD, GOLD	Samtec	SSW-105-22-F-D-VS-K
15	1		J2	TERMINAL BLOCK, 3.5MM, 10POS, PCB	On Shore Technology	ED555/10DS
16	1		J4	TERMINAL BLOCK, 3.5MM, 2POS, PCB	On Shore Technology	ED555/2DS
17	1		J5 (TOP SIDE)	CONN, HEADER, 10POS 5x2, 100mil, SMT, GOLD	Samtec	TSM-105-01-L-DV-P
18	1		J5 (BOTTOM SIDE)	CONN, RECPT, 10POS, 100mil, SMT, GOLD	Samtec	SSW-105-22-F-D-VS-K
19	4		JP1, JP2, JP3, JP5 (ALL TOP SIDE)	CONN, HEADER, 2POS, 100mil, T/H, GOLD	Samtec	HTSW-102-07-G-S
20	1		JP4	CONN, HEADER, 6POS, 100mil DBL, SMD, GOLD	Samtec	TSM-103-01-L-DV-P
21	14	47 Ohms	R1, R6-9, R11-16, R18, R20, R21	RES, 47 Ohm, 1%, 1/10W, 0603	Panasonic	ERJ-3EKF47R0V
22	6[(1)]	NI	R2, R10, R22, R24, R27, R31	RES, NI, 0603		
23	3	100 kOhms	R3-5	RES, 100k Ohm, 5%, 1/10W, 0603	Panasonic	ERJ-3GEYJ104V
24	1	3.9 kOhms	R17	RES, 3.9K Ohm, 1/10W, 0.05%, 0603	Susumu	RG1608N-392-W-T1

(1) These components are not installed.

Copyright © 2015, Texas Instruments Incorporated

Table 5. ADS126xEVM Bill of Materials (continued)

Item No.	Qty	Value	Ref Des	Description	Manufacturer	Part Number
25	1	620 Ohms	R19	RES, 620 Ohm, 0.11%, 1/10W, 0603	Panasonic	ERA-3APB621V
26	1	12 kOhms	R23	RES, 12k Ohm, 0.1%, 1/16W, 0603	TE Connectivity	7-1676481-8
27	1	1.2 kOhms	R25	RES, 1.2K Ohm, 1/10W, 0.1%, 0603	Panasonic	ERA-3ARB122V
28	2	499 Ohms	R26, R28	RES, 499 Ohm, 0.1%, 1/10W, 0603	Panasonic	ERA-3AEB4990V
29	2	2.7 kOhms	R29, R30	RES, 2.7k Ohm, 5%, 1/10W, 0603	Panasonic	ERJ-3GEYJ272V
30	1	0 Ohms	R32	RES, 0 Ohm, 1/10W, 0603	Panasonic	ERJ-3GEY0R00V
31	1	2.2k @ 25°C	RT1	Thermistor NTC, 2.2k Ohm, 1%, 0805	Vishay	NTCS0805E3222FMT
32	1		S1	SWITCH, SLIDE, SPDT, GULLWING	Copal Electronics	CAS-120TB
33	1		S2	SWITCH, SLIDE, DPDT, GULLWING	Copal Electronics	CAS-220TB
34	7		SH-J1, SH-J2, SH-J3, SH-J4, SH-J5	SHUNT, 100mil, GOLD, BLACK	3M	969102-0000-DA
35	1		U1	IC, ADC, Delta-Sigma, 32-bit, 38kSPS	Texas Instruments	ADS1262IPW[(2)]
36	1		U2	IC, REG, LDO, 2.5V, 100mA, SOT23-5	Texas Instruments	TPS79225DBVT
37	1		U3	IC, REG, LDO, -2.5V, 0.2A, SOT23-5	Texas Instruments	TPS72325DBVT
38	1		U4	IC, EEPROM, 256 kBIT, 400 kHz, 8TSSOP	Microchip Technology	24AA256-I/ST
39	1		X1	CRYSTAL, 7.3728 MHz, 18 pF, T/H	ECS Inc.	ECS-73-18-10X

(2) Installed for the ADS1262EVM. The ADS1263IPW is installed for the ADS1263EVM.

Copyright © 2015, Texas Instruments Incorporated

4.2 Schematic

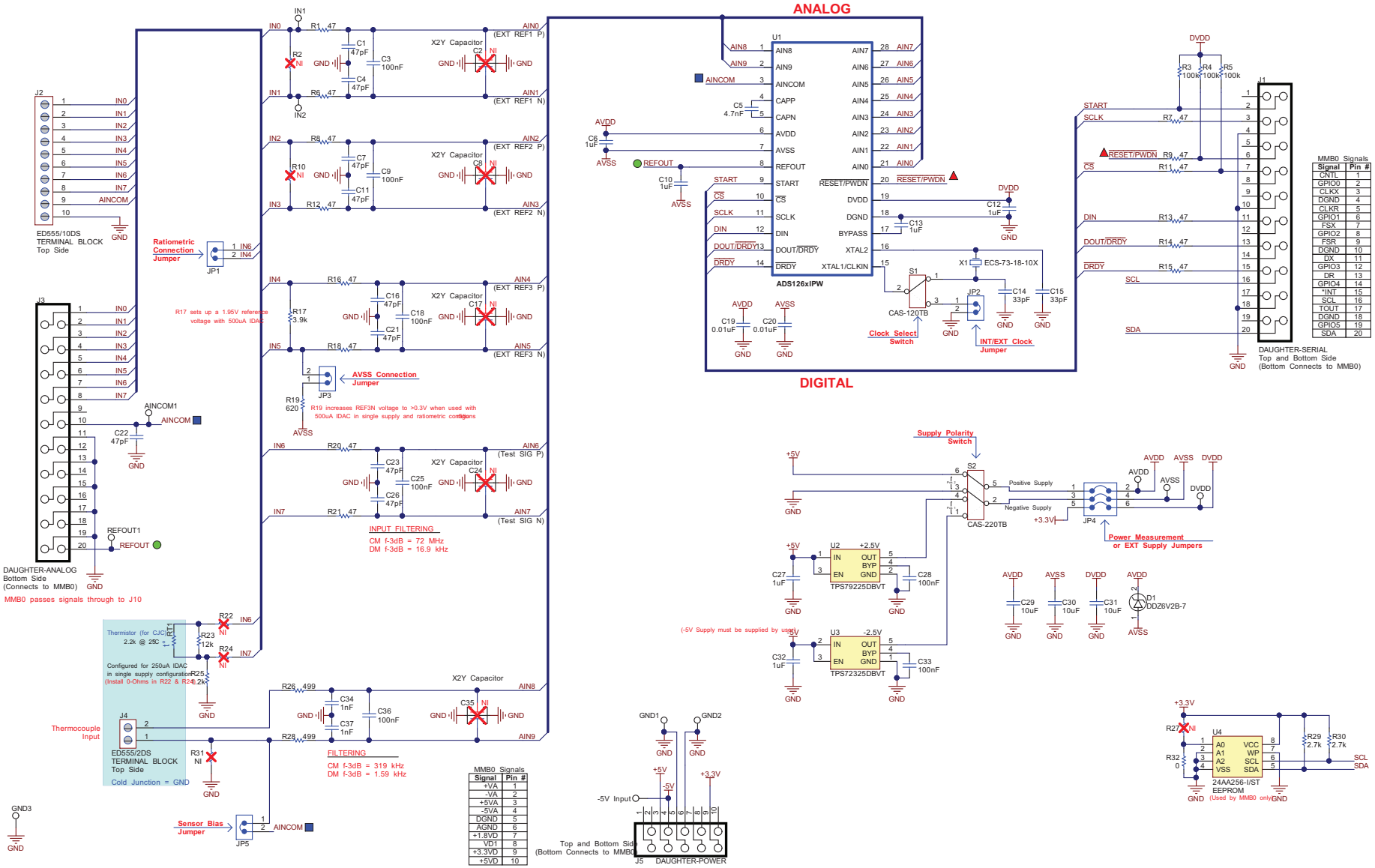

Figure 29. Schematic

Copyright © 2015, Texas Instruments Incorporated

Revision History

Changes from Original (April 2015) to A Revision	Page
• Deleted references to 6-V wall adapter power supply from this user guide	1
• Added row to Table 2 for GND connection	6
• Changed text in first two paragraphs of *Section 2.3*	7
• Changed Section 2.3.1.1	8
• Changed Section 2.3.1.1.1	8
• Deleted redundant text in Section 2.3.1.2	9
• Added text to clarify additional bench supply	10

NOTE: Page numbers for previous revisions may differ from page numbers in the current version.

Copyright © 2015, Texas Instruments Incorporated

STANDARD TERMS AND CONDITIONS FOR EVALUATION MODULES

1. *Delivery:* TI delivers TI evaluation boards, kits, or modules, including any accompanying demonstration software, components, or documentation (collectively, an “EVM” or “EVMs”) to the User (“User”) in accordance with the terms and conditions set forth herein. Acceptance of the EVM is expressly subject to the following terms and conditions.

   1.1 EVMs are intended solely for product or software developers for use in a research and development setting to facilitate feasibility evaluation, experimentation, or scientific analysis of TI semiconductors products. EVMs have no direct function and are not finished products. EVMs shall not be directly or indirectly assembled as a part or subassembly in any finished product. For clarification, any software or software tools provided with the EVM (“Software”) shall not be subject to the terms and conditions set forth herein but rather shall be subject to the applicable terms and conditions that accompany such Software

   1.2 EVMs are not intended for consumer or household use. EVMs may not be sold, sublicensed, leased, rented, loaned, assigned, or otherwise distributed for commercial purposes by Users, in whole or in part, or used in any finished product or production system.

2 *Limited Warranty and Related Remedies/Disclaimers*:

   2.1 These terms and conditions do not apply to Software. The warranty, if any, for Software is covered in the applicable Software License Agreement.

   2.2 TI warrants that the TI EVM will conform to TI's published specifications for ninety (90) days after the date TI delivers such EVM to User. Notwithstanding the foregoing, TI shall not be liable for any defects that are caused by neglect, misuse or mistreatment by an entity other than TI, including improper installation or testing, or for any EVMs that have been altered or modified in any way by an entity other than TI. Moreover, TI shall not be liable for any defects that result from User's design, specifications or instructions for such EVMs. Testing and other quality control techniques are used to the extent TI deems necessary or as mandated by government requirements. TI does not test all parameters of each EVM.

   2.3 If any EVM fails to conform to the warranty set forth above, TI's sole liability shall be at its option to repair or replace such EVM, or credit User's account for such EVM. TI's liability under this warranty shall be limited to EVMs that are returned during the warranty period to the address designated by TI and that are determined by TI not to conform to such warranty. If TI elects to repair or replace such EVM, TI shall have a reasonable time to repair such EVM or provide replacements. Repaired EVMs shall be warranted for the remainder of the original warranty period. Replaced EVMs shall be warranted for a new full ninety (90) day warranty period.

3 *Regulatory Notices:*

   3.1 *United States*

      3.1.1 *Notice applicable to EVMs not FCC-Approved:*

      This kit is designed to allow product developers to evaluate electronic components, circuitry, or software associated with the kit to determine whether to incorporate such items in a finished product and software developers to write software applications for use with the end product. This kit is not a finished product and when assembled may not be resold or otherwise marketed unless all required FCC equipment authorizations are first obtained. Operation is subject to the condition that this product not cause harmful interference to licensed radio stations and that this product accept harmful interference. Unless the assembled kit is designed to operate under part 15, part 18 or part 95 of this chapter, the operator of the kit must operate under the authority of an FCC license holder or must secure an experimental authorization under part 5 of this chapter.

      3.1.2 *For EVMs annotated as FCC – FEDERAL COMMUNICATIONS COMMISSION Part 15 Compliant:*

      CAUTION

      This device complies with part 15 of the FCC Rules. Operation is subject to the following two conditions: (1) This device may not cause harmful interference, and (2) this device must accept any interference received, including interference that may cause undesired operation.

      Changes or modifications not expressly approved by the party responsible for compliance could void the user's authority to operate the equipment.

      FCC Interference Statement for Class A EVM devices

      NOTE: This equipment has been tested and found to comply with the limits for a Class A digital device, pursuant to part 15 of the FCC Rules. These limits are designed to provide reasonable protection against harmful interference when the equipment is operated in a commercial environment. This equipment generates, uses, and can radiate radio frequency energy and, if not installed and used in accordance with the instruction manual, may cause harmful interference to radio communications. Operation of this equipment in a residential area is likely to cause harmful interference in which case the user will be required to correct the interference at his own expense.

FCC Interference Statement for Class B EVM devices

NOTE: This equipment has been tested and found to comply with the limits for a Class B digital device, pursuant to part 15 of the FCC Rules. These limits are designed to provide reasonable protection against harmful interference in a residential installation. This equipment generates, uses and can radiate radio frequency energy and, if not installed and used in accordance with the instructions, may cause harmful interference to radio communications. However, there is no guarantee that interference will not occur in a particular installation. If this equipment does cause harmful interference to radio or television reception, which can be determined by turning the equipment off and on, the user is encouraged to try to correct the interference by one or more of the following measures:

- *Reorient or relocate the receiving antenna.*
- *Increase the separation between the equipment and receiver.*
- *Connect the equipment into an outlet on a circuit different from that to which the receiver is connected.*
- *Consult the dealer or an experienced radio/TV technician for help.*

3.2 *Canada*

3.2.1 *For EVMs issued with an Industry Canada Certificate of Conformance to RSS-210*

Concerning EVMs Including Radio Transmitters:

This device complies with Industry Canada license-exempt RSS standard(s). Operation is subject to the following two conditions: (1) this device may not cause interference, and (2) this device must accept any interference, including interference that may cause undesired operation of the device.

Concernant les EVMs avec appareils radio:

Le présent appareil est conforme aux CNR d'Industrie Canada applicables aux appareils radio exempts de licence. L'exploitation est autorisée aux deux conditions suivantes: (1) l'appareil ne doit pas produire de brouillage, et (2) l'utilisateur de l'appareil doit accepter tout brouillage radioélectrique subi, même si le brouillage est susceptible d'en compromettre le fonctionnement.

Concerning EVMs Including Detachable Antennas:

Under Industry Canada regulations, this radio transmitter may only operate using an antenna of a type and maximum (or lesser) gain approved for the transmitter by Industry Canada. To reduce potential radio interference to other users, the antenna type and its gain should be so chosen that the equivalent isotropically radiated power (e.i.r.p.) is not more than that necessary for successful communication. This radio transmitter has been approved by Industry Canada to operate with the antenna types listed in the user guide with the maximum permissible gain and required antenna impedance for each antenna type indicated. Antenna types not included in this list, having a gain greater than the maximum gain indicated for that type, are strictly prohibited for use with this device.

Concernant les EVMs avec antennes détachables

Conformément à la réglementation d'Industrie Canada, le présent émetteur radio peut fonctionner avec une antenne d'un type et d'un gain maximal (ou inférieur) approuvé pour l'émetteur par Industrie Canada. Dans le but de réduire les risques de brouillage radioélectrique à l'intention des autres utilisateurs, il faut choisir le type d'antenne et son gain de sorte que la puissance isotrope rayonnée équivalente (p.i.r.e.) ne dépasse pas l'intensité nécessaire à l'établissement d'une communication satisfaisante. Le présent émetteur radio a été approuvé par Industrie Canada pour fonctionner avec les types d'antenne énumérés dans le manuel d'usage et ayant un gain admissible maximal et l'impédance requise pour chaque type d'antenne. Les types d'antenne non inclus dans cette liste, ou dont le gain est supérieur au gain maximal indiqué, sont strictement interdits pour l'exploitation de l'émetteur

3.3 *Japan*

3.3.1 *Notice for EVMs delivered in Japan:* Please see http://www.tij.co.jp/lsds/ti_ja/general/eStore/notice_01.page 日本国内に輸入される評価用キット、ボードについては、次のところをご覧ください。
http://www.tij.co.jp/lsds/ti_ja/general/eStore/notice_01.page

3.3.2 *Notice for Users of EVMs Considered "Radio Frequency Products" in Japan:* EVMs entering Japan may not be certified by TI as conforming to Technical Regulations of Radio Law of Japan.

If User uses EVMs in Japan, not certified to Technical Regulations of Radio Law of Japan, User is required by Radio Law of Japan to follow the instructions below with respect to EVMs:

1. Use EVMs in a shielded room or any other test facility as defined in the notification #173 issued by Ministry of Internal Affairs and Communications on March 28, 2006, based on Sub-section 1.1 of Article 6 of the Ministry's Rule for Enforcement of Radio Law of Japan,
2. Use EVMs only after User obtains the license of Test Radio Station as provided in Radio Law of Japan with respect to EVMs, or
3. Use of EVMs only after User obtains the Technical Regulations Conformity Certification as provided in Radio Law of Japan with respect to EVMs. Also, do not transfer EVMs, unless User gives the same notice above to the transferee. Please note that if User does not follow the instructions above, User will be subject to penalties of Radio Law of Japan.

【無線電波を送信する製品の開発キットをお使いになる際の注意事項】 開発キットの中には技術基準適合証明を受けていないものがあります。 技術適合証明を受けていないもののご使用に際しては、電波法遵守のため、以下のいずれかの措置を取っていただく必要がありますのでご注意ください。

1. 電波法施行規則第6条第1項第1号に基づく平成18年3月28日総務省告示第173号で定められた電波暗室等の試験設備でご使用いただく。
2. 実験局の免許を取得後ご使用いただく。
3. 技術基準適合証明を取得後ご使用いただく。

なお、本製品は、上記の「ご使用にあたっての注意」を譲渡先、移転先に通知しない限り、譲渡、移転できないものとします。

上記を遵守頂けない場合は、電波法の罰則が適用される可能性があることをご留意ください。 日本テキサス・インスツルメンツ株式会社

東京都新宿区西新宿６丁目２４番１号

西新宿三井ビル

3.3.3 *Notice for EVMs for Power Line Communication:* Please see http://www.tij.co.jp/lsds/ti_ja/general/eStore/notice_02.page

電力線搬送波通信についての開発キットをお使いになる際の注意事項については、次のところをご覧ください。http://www.tij.co.jp/lsds/ti_ja/general/eStore/notice_02.page

4 *EVM Use Restrictions and Warnings:*

4.1 EVMS ARE NOT FOR USE IN FUNCTIONAL SAFETY AND/OR SAFETY CRITICAL EVALUATIONS, INCLUDING BUT NOT LIMITED TO EVALUATIONS OF LIFE SUPPORT APPLICATIONS.

4.2 User must read and apply the user guide and other available documentation provided by TI regarding the EVM prior to handling or using the EVM, including without limitation any warning or restriction notices. The notices contain important safety information related to, for example, temperatures and voltages.

4.3 *Safety-Related Warnings and Restrictions:*

4.3.1 User shall operate the EVM within TI's recommended specifications and environmental considerations stated in the user guide, other available documentation provided by TI, and any other applicable requirements and employ reasonable and customary safeguards. Exceeding the specified performance ratings and specifications (including but not limited to input and output voltage, current, power, and environmental ranges) for the EVM may cause personal injury or death, or property damage. If there are questions concerning performance ratings and specifications, User should contact a TI field representative prior to connecting interface electronics including input power and intended loads. Any loads applied outside of the specified output range may also result in unintended and/or inaccurate operation and/or possible permanent damage to the EVM and/or interface electronics. Please consult the EVM user guide prior to connecting any load to the EVM output. If there is uncertainty as to the load specification, please contact a TI field representative. During normal operation, even with the inputs and outputs kept within the specified allowable ranges, some circuit components may have elevated case temperatures. These components include but are not limited to linear regulators, switching transistors, pass transistors, current sense resistors, and heat sinks, which can be identified using the information in the associated documentation. When working with the EVM, please be aware that the EVM may become very warm.

4.3.2 EVMs are intended solely for use by technically qualified, professional electronics experts who are familiar with the dangers and application risks associated with handling electrical mechanical components, systems, and subsystems. User assumes all responsibility and liability for proper and safe handling and use of the EVM by User or its employees, affiliates, contractors or designees. User assumes all responsibility and liability to ensure that any interfaces (electronic and/or mechanical) between the EVM and any human body are designed with suitable isolation and means to safely limit accessible leakage currents to minimize the risk of electrical shock hazard. User assumes all responsibility and liability for any improper or unsafe handling or use of the EVM by User or its employees, affiliates, contractors or designees.

4.4 User assumes all responsibility and liability to determine whether the EVM is subject to any applicable international, federal, state, or local laws and regulations related to User's handling and use of the EVM and, if applicable, User assumes all responsibility and liability for compliance in all respects with such laws and regulations. User assumes all responsibility and liability for proper disposal and recycling of the EVM consistent with all applicable international, federal, state, and local requirements.

5. *Accuracy of Information:* To the extent TI provides information on the availability and function of EVMs, TI attempts to be as accurate as possible. However, TI does not warrant the accuracy of EVM descriptions, EVM availability or other information on its websites as accurate, complete, reliable, current, or error-free.

6. *Disclaimers:*

   6.1 EXCEPT AS SET FORTH ABOVE, EVMS AND ANY WRITTEN DESIGN MATERIALS PROVIDED WITH THE EVM (AND THE DESIGN OF THE EVM ITSELF) ARE PROVIDED "AS IS" AND "WITH ALL FAULTS." TI DISCLAIMS ALL OTHER WARRANTIES, EXPRESS OR IMPLIED, REGARDING SUCH ITEMS, INCLUDING BUT NOT LIMITED TO ANY IMPLIED WARRANTIES OF MERCHANTABILITY OR FITNESS FOR A PARTICULAR PURPOSE OR NON-INFRINGEMENT OF ANY THIRD PARTY PATENTS, COPYRIGHTS, TRADE SECRETS OR OTHER INTELLECTUAL PROPERTY RIGHTS.

   6.2 EXCEPT FOR THE LIMITED RIGHT TO USE THE EVM SET FORTH HEREIN, NOTHING IN THESE TERMS AND CONDITIONS SHALL BE CONSTRUED AS GRANTING OR CONFERRING ANY RIGHTS BY LICENSE, PATENT, OR ANY OTHER INDUSTRIAL OR INTELLECTUAL PROPERTY RIGHT OF TI, ITS SUPPLIERS/LICENSORS OR ANY OTHER THIRD PARTY, TO USE THE EVM IN ANY FINISHED END-USER OR READY-TO-USE FINAL PRODUCT, OR FOR ANY INVENTION, DISCOVERY OR IMPROVEMENT MADE, CONCEIVED OR ACQUIRED PRIOR TO OR AFTER DELIVERY OF THE EVM.

7. *USER'S INDEMNITY OBLIGATIONS AND REPRESENTATIONS.* USER WILL DEFEND, INDEMNIFY AND HOLD TI, ITS LICENSORS AND THEIR REPRESENTATIVES HARMLESS FROM AND AGAINST ANY AND ALL CLAIMS, DAMAGES, LOSSES, EXPENSES, COSTS AND LIABILITIES (COLLECTIVELY, "CLAIMS") ARISING OUT OF OR IN CONNECTION WITH ANY HANDLING OR USE OF THE EVM THAT IS NOT IN ACCORDANCE WITH THESE TERMS AND CONDITIONS. THIS OBLIGATION SHALL APPLY WHETHER CLAIMS ARISE UNDER STATUTE, REGULATION, OR THE LAW OF TORT, CONTRACT OR ANY OTHER LEGAL THEORY, AND EVEN IF THE EVM FAILS TO PERFORM AS DESCRIBED OR EXPECTED.

8. *Limitations on Damages and Liability:*

   8.1 *General Limitations*. IN NO EVENT SHALL TI BE LIABLE FOR ANY SPECIAL, COLLATERAL, INDIRECT, PUNITIVE, INCIDENTAL, CONSEQUENTIAL, OR EXEMPLARY DAMAGES IN CONNECTION WITH OR ARISING OUT OF THESE TERMS ANDCONDITIONS OR THE USE OF THE EVMS PROVIDED HEREUNDER, REGARDLESS OF WHETHER TI HAS BEEN ADVISED OF THE POSSIBILITY OF SUCH DAMAGES. EXCLUDED DAMAGES INCLUDE, BUT ARE NOT LIMITED TO, COST OF REMOVAL OR REINSTALLATION, ANCILLARY COSTS TO THE PROCUREMENT OF SUBSTITUTE GOODS OR SERVICES, RETESTING, OUTSIDE COMPUTER TIME, LABOR COSTS, LOSS OF GOODWILL, LOSS OF PROFITS, LOSS OF SAVINGS, LOSS OF USE, LOSS OF DATA, OR BUSINESS INTERRUPTION. NO CLAIM, SUIT OR ACTION SHALL BE BROUGHT AGAINST TI MORE THAN ONE YEAR AFTER THE RELATED CAUSE OF ACTION HAS OCCURRED.

   8.2 *Specific Limitations.* IN NO EVENT SHALL TI'S AGGREGATE LIABILITY FROM ANY WARRANTY OR OTHER OBLIGATION ARISING OUT OF OR IN CONNECTION WITH THESE TERMS AND CONDITIONS, OR ANY USE OF ANY TI EVM PROVIDED HEREUNDER, EXCEED THE TOTAL AMOUNT PAID TO TI FOR THE PARTICULAR UNITS SOLD UNDER THESE TERMS AND CONDITIONS WITH RESPECT TO WHICH LOSSES OR DAMAGES ARE CLAIMED. THE EXISTENCE OF MORE THAN ONE CLAIM AGAINST THE PARTICULAR UNITS SOLD TO USER UNDER THESE TERMS AND CONDITIONS SHALL NOT ENLARGE OR EXTEND THIS LIMIT.

9. *Return Policy.* Except as otherwise provided, TI does not offer any refunds, returns, or exchanges. Furthermore, no return of EVM(s) will be accepted if the package has been opened and no return of the EVM(s) will be accepted if they are damaged or otherwise not in a resalable condition. If User feels it has been incorrectly charged for the EVM(s) it ordered or that delivery violates the applicable order, User should contact TI. All refunds will be made in full within thirty (30) working days from the return of the components(s), excluding any postage or packaging costs.

10. *Governing Law:* These terms and conditions shall be governed by and interpreted in accordance with the laws of the State of Texas, without reference to conflict-of-laws principles. User agrees that non-exclusive jurisdiction for any dispute arising out of or relating to these terms and conditions lies within courts located in the State of Texas and consents to venue in Dallas County, Texas. Notwithstanding the foregoing, any judgment may be enforced in any United States or foreign court, and TI may seek injunctive relief in any United States or foreign court.

Mailing Address: Texas Instruments, Post Office Box 655303, Dallas, Texas 75265
Copyright © 2015, Texas Instruments Incorporated

IMPORTANT NOTICE

Texas Instruments Incorporated and its subsidiaries (TI) reserve the right to make corrections, enhancements, improvements and other changes to its semiconductor products and services per JESD46, latest issue, and to discontinue any product or service per JESD48, latest issue. Buyers should obtain the latest relevant information before placing orders and should verify that such information is current and complete. All semiconductor products (also referred to herein as “components”) are sold subject to TI’s terms and conditions of sale supplied at the time of order acknowledgment.

TI warrants performance of its components to the specifications applicable at the time of sale, in accordance with the warranty in TI’s terms and conditions of sale of semiconductor products. Testing and other quality control techniques are used to the extent TI deems necessary to support this warranty. Except where mandated by applicable law, testing of all parameters of each component is not necessarily performed.

TI assumes no liability for applications assistance or the design of Buyers’ products. Buyers are responsible for their products and applications using TI components. To minimize the risks associated with Buyers’ products and applications, Buyers should provide adequate design and operating safeguards.

TI does not warrant or represent that any license, either express or implied, is granted under any patent right, copyright, mask work right, or other intellectual property right relating to any combination, machine, or process in which TI components or services are used. Information published by TI regarding third-party products or services does not constitute a license to use such products or services or a warranty or endorsement thereof. Use of such information may require a license from a third party under the patents or other intellectual property of the third party, or a license from TI under the patents or other intellectual property of TI.

Reproduction of significant portions of TI information in TI data books or data sheets is permissible only if reproduction is without alteration and is accompanied by all associated warranties, conditions, limitations, and notices. TI is not responsible or liable for such altered documentation. Information of third parties may be subject to additional restrictions.

Resale of TI components or services with statements different from or beyond the parameters stated by TI for that component or service voids all express and any implied warranties for the associated TI component or service and is an unfair and deceptive business practice. TI is not responsible or liable for any such statements.

Buyer acknowledges and agrees that it is solely responsible for compliance with all legal, regulatory and safety-related requirements concerning its products, and any use of TI components in its applications, notwithstanding any applications-related information or support that may be provided by TI. Buyer represents and agrees that it has all the necessary expertise to create and implement safeguards which anticipate dangerous consequences of failures, monitor failures and their consequences, lessen the likelihood of failures that might cause harm and take appropriate remedial actions. Buyer will fully indemnify TI and its representatives against any damages arising out of the use of any TI components in safety-critical applications.

In some cases, TI components may be promoted specifically to facilitate safety-related applications. With such components, TI’s goal is to help enable customers to design and create their own end-product solutions that meet applicable functional safety standards and requirements. Nonetheless, such components are subject to these terms.

No TI components are authorized for use in FDA Class III (or similar life-critical medical equipment) unless authorized officers of the parties have executed a special agreement specifically governing such use.

Only those TI components which TI has specifically designated as military grade or “enhanced plastic” are designed and intended for use in military/aerospace applications or environments. Buyer acknowledges and agrees that any military or aerospace use of TI components which have ***not*** been so designated is solely at the Buyer's risk, and that Buyer is solely responsible for compliance with all legal and regulatory requirements in connection with such use.

TI has specifically designated certain components as meeting ISO/TS16949 requirements, mainly for automotive use. In any case of use of non-designated products, TI will not be responsible for any failure to meet ISO/TS16949.

Products		**Applications**	
Audio	www.ti.com/audio	Automotive and Transportation	www.ti.com/automotive
Amplifiers	amplifier.ti.com	Communications and Telecom	www.ti.com/communications
Data Converters	dataconverter.ti.com	Computers and Peripherals	www.ti.com/computers
DLP® Products	www.dlp.com	Consumer Electronics	www.ti.com/consumer-apps
DSP	dsp.ti.com	Energy and Lighting	www.ti.com/energy
Clocks and Timers	www.ti.com/clocks	Industrial	www.ti.com/industrial
Interface	interface.ti.com	Medical	www.ti.com/medical
Logic	logic.ti.com	Security	www.ti.com/security
Power Mgmt	power.ti.com	Space, Avionics and Defense	www.ti.com/space-avionics-defense
Microcontrollers	microcontroller.ti.com	Video and Imaging	www.ti.com/video
RFID	www.ti-rfid.com		
OMAP Applications Processors	www.ti.com/omap	**TI E2E Community**	e2e.ti.com
Wireless Connectivity	www.ti.com/wirelessconnectivity		

Mailing Address: Texas Instruments, Post Office Box 655303, Dallas, Texas 75265
Copyright © 2015, Texas Instruments Incorporated