# ADS1232REF User's Guide

The ADS1232REF is a reference design for the ADS1232 24-bit, delta-sigma analog-to-digital converter (ADC). It contains all the circuitry and user interface elements needed for a weigh-scale digitizer, and is meant as an example of good design for a basic weigh-scale system. The ADS1232REF is also suitable for general evaluation of the ADS1232 device. Additionally, performance results obtained with the ADS1232REF are applicable to the ADS1234, a device with identical performance.

The ADS1232REF hardware has the following features:

- ADS1232 ADC
- Connections for load cells or other voltage sources
- Low-side excitation switch on the load cell header connector
- Ample EMI/RFI suppression between the ADC and rest of design
- Eight-digit starburst LCD readout
- USB connection for firmware updates and remote control
- Designed for very low power consumption
- Battery (9V) or wall power

Version 1.1.0 of the firmware includes the following features:

- Weigh-scale mode with two-point calibration
- Complete configuration of the device
- Real-time peak-to-peak and RMS noise calculation
- Autoranging voltage display
- Noise displayed in volts, codes, and bits
- Voltage displayed in volts or codes
- Adjustable averaging mode
- Raw hexadecimal code display
- Simple and fast configuration
- Parameters saved to internal flash memory
- Computer link

Graphical PC software is also provided for histogram display, datalogging, and device control.

We welcome bug reports and suggestions for additional features; please contact the Texas Instruments Precision Analog Applications Group.

Hyperterm is a trademark of Microsoft Corporation.
Windows is a registered trademark of Microsoft Corporation.
All other trademarks are the property of their respective owners.



Copyright © 2005–2011, Texas Instruments Incorporated

## Contents


1 Getting Started ..... 3
2 Weigh Scale Mode ..... 7
3 Analysis Mode ..... 11
4 Using the PC Software ..... 14
5 Serial Console ..... 18
6 Hardware ..... 20
Appendix A Schematic and Layout ..... 23


## List of Figures


1 ADS1232REF Controls and Connectors ..... 3
2 4-Wire Load Cell to Terminal Block ..... 4
3 6-Wire Load Cell to Terminal Block ..... 5
4 4-Wire Load Cell to Header ..... 5
5 6-Wire Load Cell to Header ..... 5
6 ADS1232REF Software Display ..... 15
7 ADS1232REF Average Data ..... 16
8 ADS1232REF Hardware Block Diagram ..... 20
9 ADS1232REF PCB—Top Side ..... 25
10 ADS1232REF PCB—Bottom Side ..... 25
11 ADS1232REF Schematic—ADC ..... 26
12 ADS1232REF Schematic—MCU ..... 27
13 ADS1232REF Schematic—USB ..... 28


## List of Tables


1 Unit Conversion Factors and Display Formats ..... 8
2 Parameters in Configuration Mode ..... 9
3 Modes and Example Displays ..... 11
4 Voltage Display Ranges ..... 12
5 Parameters in Analysis Mode ..... 13
6 Console Mode Commands ..... 19
7 Load Cell Header Pinout ..... 21
8 Terminal Block Pinout ..... 22
9 ADS1232REF Bill of Materials ..... 23



Copyright © 2005–2011, Texas Instruments Incorporated

# 1 Getting Started

Figure 1 shows a diagram of the ADS1232REF.

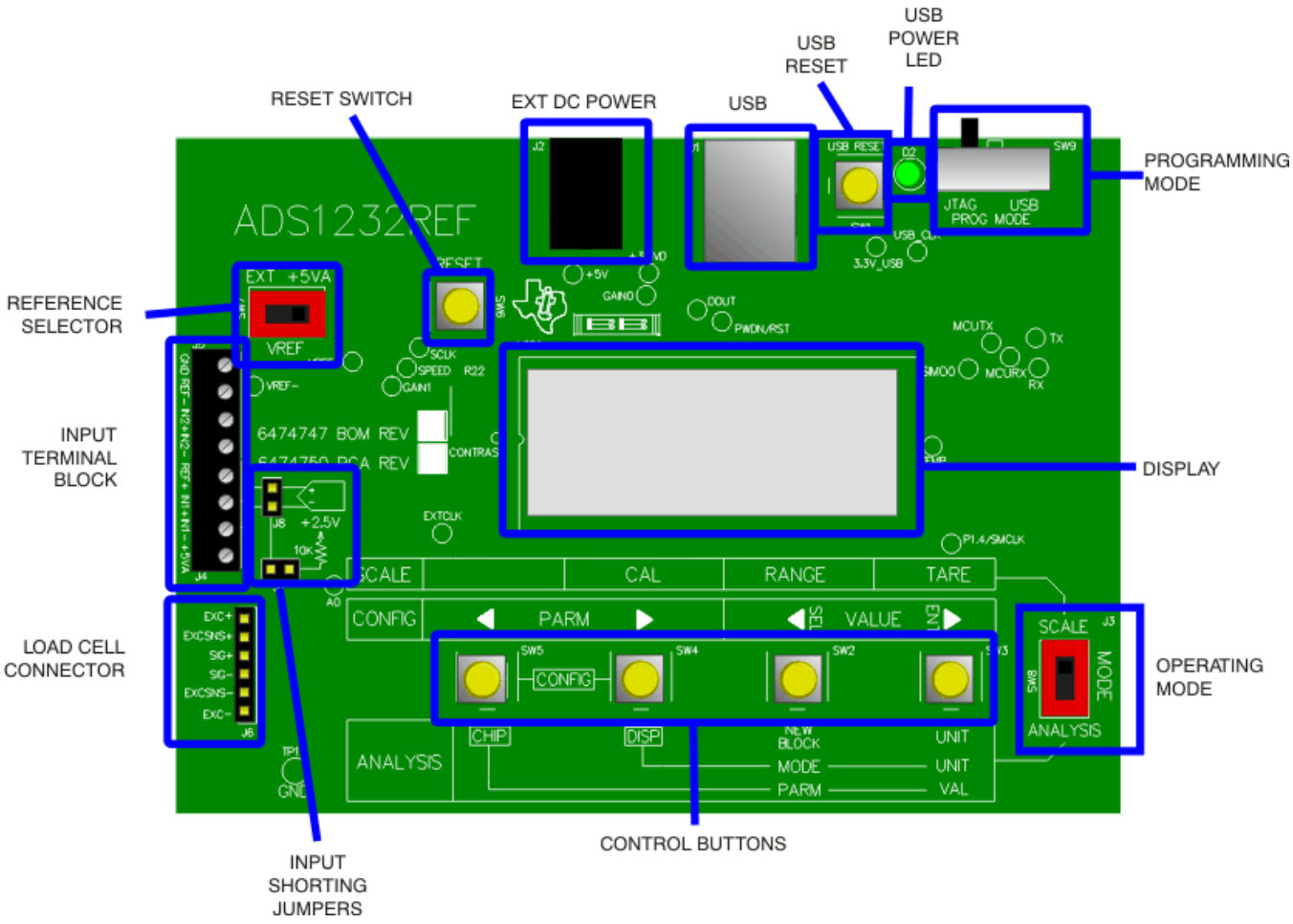


**Figure 1. ADS1232REF Controls and Connectors**

## 1.1 Operating Modes

The ADS1232REF operates in one of three modes:

- **Scale mode:** When the mode select switch is in Scale position, the ADS1232REF acts as a basic weigh scale. The scale has tare, range, and calibrate functions, and can display metric (SI) units. Other parameters can be configured in configuration screens. Scale mode is described in detail in Section 2.
- **Analysis mode:** When the mode select switch is in Analysis position, codes are taken directly from the ADS1232 device and various measurements are made upon them. Several measurements are available, including raw display, voltage, RMS noise, and peak-to-peak measurements. The ADS1232 can also be configured directly from this mode. Analysis mode is described in detail in Section 3.
- **Configuration mode:** Parameters governing the operation of the ADS1232REF can be viewed and altered in this mode. Scale and Analysis modes have different options in configuration mode: configuration for Scale mode is described in Section 2.4, and configuration for Analysis mode is described in Section 3.4.


Copyright © 2005–2011, Texas Instruments Incorporated

## 1.2 Controls

The main controls for the ADS1232REF are the four buttons and the mode selection slide-switch (see Figure 1).

The slide-switch selects between weigh-scale (Scale) and Analysis modes. The ADS1232REF switches modes only when it is displaying data. If the switch is changed in a configuration mode, nothing happens until the configuration mode is exited. At that time the ADS1232REF reads the switch and enters the selected mode.

The four buttons have different functions, depending on the operating mode. In Scale mode, the switches have the functions in the box labeled **SCALE**. In Analysis mode, the switches have the functions shown in the box labeled **ANALYSIS**. In configuration mode, the switches have the functions shown in the box labeled **CONFIG**.

The buttons also have different names in different modes. In this document, they are identifed by the respective names they have in the mode under discussion.

### 1.2.1 Auxiliary Controls

The Reset switch resets the board, except for the USB interface.

The USB Reset switch resets the USB interface. If USB communication fails, pressing **USB Reset** may solve the problem.

The Programming Mode switch is used to update the firmware. For normal operation, it should be set to JTAG.

## 1.3 Powering the Board

To apply power to the ADS1232REF, connect a 9V battery or plug in a 6V to 9V ac wall adapter.

AC adapters must be tip positive/sleeve negative. When an ac adapter is plugged in, the board always takes power from it, and not from the battery.

The ADS1232REF is protected against polarity reversal. If a power source is connected in reverse by mistake, the display remains blank. To prevent damage to the board, do not leave a reversed power source connected for longer than a few seconds.

## 1.4 Connecting a Load Cell

The ADS1232REF is specifically designed for connection to load cells. Two connectors are provided for this application. The terminal block is used for load cells having stripped wire connections; the load cell header is for load cells having a header connector. The terminal block provides connections to the reference input, the power supply, and both input channels. The header has switched excitation.

### 1.4.1 Connecting a 4-Wire Load Cell to the Terminal Block

Figure 2 shows the connection of a 4-wire load cell to the terminal block. In this configuration, the load cell is excited by the +5V power supply, and the ADC's reference is taken from the power supply.

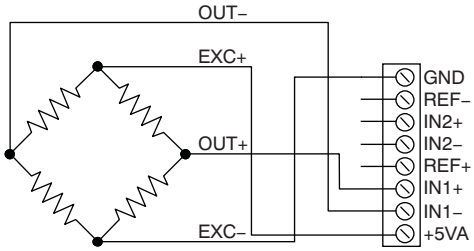


**Figure 2. 4-Wire Load Cell to Terminal Block**

For this configuration, the reference select switch must be in the +5VA position.


Copyright © 2005–2011, Texas Instruments Incorporated

### 1.4.2 Connecting a 6-Wire Load Cell to the Terminal Block

Figure 3 shows the connection of a 6-wire load cell to the terminal block. In this configuration, the load cell is excited by the +5V power supply, and the ADC reference is taken from the sense wire returning from the load cell. The sense wire connects to the excitation wire at the bridge sensor.

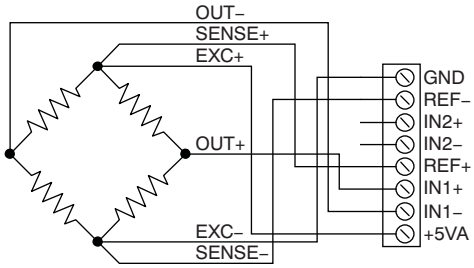


**Figure 3. 6-Wire Load Cell to Terminal Block**

For this configuration, the reference select switch should be in the EXT position for best performance. The +5V position also works, but may not perform as well.

### 1.4.3 Connecting a 4-Wire Load Cell to the Header

Figure 4 shows the connection of a 4-wire load cell to the header. In this configuration, the load cell is excited by the +5V power supply, and the ADC reference is taken from the power supply.

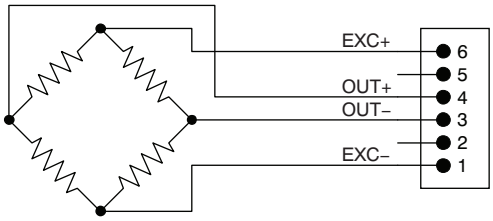


**Figure 4. 4-Wire Load Cell to Header**

For this configuration, the reference select switch must be in the +5VA position; the EXT position will not work.

### 1.4.4 Connecting a 6-Wire Load Cell to the Header

Figure 5 shows the connection of a 6-wire load cell to the header. In this configuration, the load cell is excited by the +5V power supply, and the ADC reference is taken from the sense wire returning from the load cell. The sense wire connects to the excitation wire at the bridge sensor.

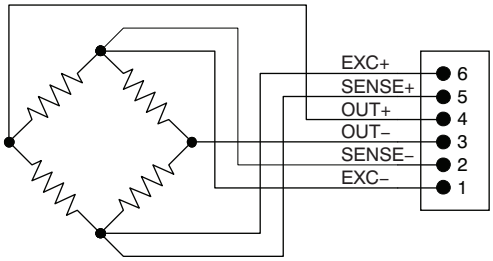


**Figure 5. 6-Wire Load Cell to Header**

For this configuration, the reference select switch should be in the EXT position for best performance. The +5V position also works, but the device may not perform as well.


Copyright © 2005–2011, Texas Instruments Incorporated

## 1.5 Connecting Other Sources

In general, the ADS1232REF can accurately measure any voltage in the input range of the ADS1232 ADC, as long as the following rules are observed:

- ***Never apply a negative voltage to the inputs of the ADS1232REF.*** The ADS1232 cannot accept negative voltages at its input. Applying negative voltages may damage both the device and the ADS1232REF. (The negative signs used in some signal names indicate inversion, not polarity.)
- Two channels are available. Be sure that the switch is set to the correct channel.
- For single-ended signals, ground the negative input or connect it to 2.5V. 2.5V is available from a voltage divider by shorting J7; see Section 6.4.5 for details.
- The input range of the amplifier on the ADS1232 does not extend to the supplies. See the ADS1232 data sheet for details.

Note that Scale mode is designed only for use with load cells. Although it can be tested with a voltage source or resistive divider, Scale mode does not, in general, display meaningful data unless a load cell is connected and calibration is performed.

## 1.6 Connecting an External Clock

To connect an external clock, connect a clock oscillator to the EXTCLK test point. No settings need to be changed; the ADS1232 will automatically use the attached clock.

The clock source must conform to 3.3V TTL or CMOS logic rules.

## 1.7 Common Tasks

### 1.7.1 Shorted-Input Noise Test

The noise measurements given in the product data sheet are taken with the inputs shorted to 2.5V. These noise measurements can be replicated on the ADS1232REF with no external hardware. To set up these measurements on the ADS1232REF, perform the following steps:

1. Move the mode switch to Analysis mode.
2. Short jumpers J8 and J7. (These jumpers are located very near the terminal block, and are marked *Input Shorting Jumpers* in Figure 1.)
3. Set up the ADS1232 as desired, as described in the previous sections.
4. Hold down the **DISP** button. The display shows the current display mode. While holding down **DISP**, press the **UNIT** button until the word on the left side is `RMS`.
5. While still holding down **DISP**, press the **MODE** button until the word on the right side is `VOLT`.
6. Release the **DISP** button. The display shows the word `GOT` followed by an increasing number. Once the appropriate number of points is collected, the calculated noise voltage is displayed. This value is the shorted-input RMS noise voltage, input-referred.

The first RMS noise measurement may be incorrect as a result of device settling. The second measurement is generally correct.

For a detailed description of Analysis mode, see Section 3.

### 1.7.2 Measuring Mass

The following items are required to measure mass with the ADS1232REF:

- A load cell, connected as described in Section 1.4
- An object of known mass within the load cell range

To avoid performing calibration on each power-up, you can save the calibration settings to flash memory. See Section 3.4.1 for details.


Copyright © 2005–2011, Texas Instruments Incorporated

**Obtaining a calibration weight:**

Before the ADS1232REF can display the mass of an object, it must measure the output of the load cell for a previously known mass. The known mass can be adjusted.

At power-up, the ADS1232REF expects a 5kg mass. If this mass is not available, or if the load cell range is not compatible with this mass, the calibration mass can be changed in the following manner:

1. Determine the mass of the calibration weight. The most accurate way to determine the mass is to weigh the calibration object on an accurately calibrated scale. If the weight is precalibrated, its given mass can be used, although this approach is not generally as accurate. (Note that the accuracy of the ADS1232REF as a scale directly depends on the accuracy to which the calibration weight can be measured.)
2. Switch the mode switch to SCALE mode.
3. Press the **PARM** buttons simultaneously. The ADS1232REF enters configuration mode.
4. Use the **ENT** and **SEL** buttons to select the screen which shows `UNIT=`. This screen allows you to select the units used for the calibration mass. If the units shown are not correct, adjust them using the **PARM** buttons.
5. Use the **VALUE** buttons to select the screen that shows `CW=` followed by the calibration mass. On this screen, you can adjust each digit of the calibration mass separately. Select the digit using the **VALUE** buttons. The currently-selected digit flashes, and can be adjusted using the **PARM** buttons.
6. Adjust the calibration mass to match the mass of the calibration weight.
7. Press the **PARM** buttons to exit the configuration mode.

**Preparing Scale mode:**

Do the following steps to set up the scale mode:

1. Connect the load cell.
2. If the input shorting jumpers J8 and J7 are connected, disconnect them (see Figure 1).
3. Obtain a weight of known mass.
4. If the mass of the weight is not equal to the configured calibration mass, adjust the calibration mass as described above.
5. Move the mode switch to **SCALE** position. If calibration has not been performed, the display reads `NO CAL`.
6. Press the **CAL** button, and follow the calibration procedure given in Section 2.3.

If the calibration is performed properly, and the load cell is connected correctly, the ADS1232REF will measure the mass of an object placed on the load cell (provided that the mass of the object is within the device range).

Weigh scale mode is described in detail in Section 2.

## 2 Weigh Scale Mode

In weigh scale mode, the ADS1232REF displays mass.[1] Mass is displayed in either SI or avoirdupois units based on the voltage received from a load cell.

The ADS1232REF operates in Scale mode when the mode switch is set to the Scale position.

To accurately calculate mass, the ADS1232REF must have calibration information for the load cell. When scale mode is first entered, the ADS1232REF displays `NO CAL`, because the ADS1232REF has no calibration data when it is powered on.

By default, mass is calculated from the average of four successive readings from the ADC. The number of points for averaging can be adjusted, and averaging can be turned off.

(1) Load cells do not measure mass directly; they output a voltage proportional to the weight of an object. The mass of an object can be accurately inferred from this voltage as long as a calibration is accurately performed, the downward force of gravity remains constant (as it does if the load cell is not moved to a different altitude), and the tilt of the load cell does not change; if either of the latter conditions change, a new calibration must be performed.


Copyright © 2005–2011, Texas Instruments Incorporated

## 2.1 Display

Weigh scale mode can display mass in these uints: µg (displayed as *ug*), g, kg, pounds (*lb*), stone (*st*), and ounces (*oz*).[2]

Internally, mass is measured in grams, and calibration factors are stored in grams. At display time, grams are converted to the desired display unit using the conversion factors given in Table 1.

[2] The avoirdupois units used by the ADS1232REF are equal in the imperial and U. S. customary systems.

**Table 1. Unit Conversion Factors and Display Formats**

| UNIT | MULTIPLIER | FORMAT |
|---|---|---|
| micrograms (µg) | $10^6$ | *nnn.nnnug* |
| milligrams (mg) | 1000 | *nnn.nnnmg* |
| grams (g) | 1 | *nnn.nnng* |
| kilograms (kg) | $10^{-3}$ | *nnn.nnnkg* |
| ounces (oz) | 0.035274 | *nnn.nnnoz* |
| pounds (lb) | 0.0022046 | *nnn.nnnlb* |
| stone (st) | $157.473 \times 10^{-6}$ | *nnstnn.nn* |

The display format for *stone* differs from the format used for the other units. One stone is equal to fourteen pounds; weight in stone is commonly expressed as a number of stone followed by a number of pounds. On the ADS1232REF, two digits are shown for stone, followed by *st*, followed by pounds displayed to two decimal places.

### 2.1.1 Calculation of Mass

Mass is calculated from ADC code using the formula:

$$w = m \bullet c + w_{zs} - w_t$$

where:

- ***w*** = mass
- ***c*** = the ADC code
- $\boldsymbol{w_t}$ = tare weight
- $\boldsymbol{m}$, $\boldsymbol{w_{zs}}$, $\boldsymbol{w_t}$ = values determined in the calibration process

***m*** is a calibration constant, and is calculated using Equation 1:

$$m = \frac{w_{fs}}{c_{fs} - c_{zs}} \quad (1)$$

where $w_{fs}$ is the user-specified calibration mass, $c_{fs}$ is the ADC code taken with the calibration mass applied, and $c_{zs}$ is the ADC measurement taken with no load.

$\mathbf{w_{zs}}$ , the zero-scale mass, is calculated from m and $c_{zs}$ using Equation 2:

$$w_{zs} = -m \bullet c_{zs} \quad (2)$$

## 2.2 Button Functions

### 2.2.1 TARE

The tare function allows the mass of a substance to be measured separately from the mass of its container. When the **TARE** button is pressed, the scale measures the mass and records it. This reading is subtracted from each subsequent measurement.

The recorded tare value can be reset to zero by holding the **TARE** button down for at least one second. When the tare value is to be reset, the display reads `TARE 0FF`.

Tare is also reset following a calibration.


Copyright © 2005–2011, Texas Instruments Incorporated

### 2.2.2 RANGE

The **RANGE** button changes the units or range of the display. **RANGE** cycles through all available units; see Section 2.1 for details. When the **RANGE** button is depressed, it displays the selected unit.

### 2.2.3 CAL

Pressing CAL initiates the two-point calibration sequence. See Section 2.3 for details.

## *2.3 Calibration*

Two-point calibration is performed by pressing the **CAL** button. When this button is pressed, the board executes the following command sequence:

1. The board scrolls the message, `REMOVE WEIGHT`.
2. The user removes all weight from the load cell and presses any button.
3. The board measures the load cell voltage and records it as the zero point.
4. The board scrolls the message `PLACE CAL WEIGHT`.
5. The user places a weight on the load cell and presses any button. The weight should have the mass that was selected in the configuration mode.
6. The board measures the load cell voltage and records it as the calibration weight.

New calibration data are lost when power is removed. To prevent this data loss, calibration data can be saved, with other board settings, to flash memory. See Section 3.4.1 for details.

## *2.4 Configuration*

The parameters for Scale mode can be adjusted in the configuration mode.

To enter configuration mode, press the **PARM** buttons simultaneously. The four buttons then assume the functions shown in the CONFIG box. To exit Configuration mode, press the **PARM** buttons simultaneously again. This function does not cause parameters to be adjusted, because only button releases are detected in Configuration mode.

Configuration mode contains a number of adjustable parameters. To scroll through the available parameters, use the **VALUE** buttons. To change the parameter values, use the **PARM** buttons.

Some items in configuration mode are not parameters, but commands or gateways to a submenu. These items are labelled as words with a question mark. To enter these or to execute the command, press either of the **PARM** buttons.

All parameters in the analysis and scale configuration menus are independent, including the parameters found in both modes.

Table 2 summarizes the available parameters.

**Table 2. Parameters in Configuration Mode**

| PARAMETER | DISPLAY | VALUE RANGE | DESCRIPTION |
|---|---|---|---|
| Display units | UNIT= | µg, mg, g, kg, lb, st, oz | Display units |
| Channel | CHANNEL | 1, 2 | Analog input channel |
| Averages | AVGS= | 2–128 | Number of points to average |
| ADC speed | SPD= | FAST, SLOW | Acquisition rate |
| Calibration mass | CW= | 0–99.9 in various units | Calibration mass and unit |
| Offset calibration | OCAL? | — | Offset calibration; see text |
| Save parameters | SAVE? | — | Save parameters; see text |
| Version number | V1.1.0 | — | Firmware version number display |


Copyright © 2005–2011, Texas Instruments Incorporated

### 2.4.1 Parameters

**Display units:** The units to use when displaying mass. Available units are µg (displayed as ug), mg, g, kg, ounces (oz), pounds, (lb), and stone (st). See Section 2.1 for details.

**Averages:** Number of points to use when reading weight. The choices available are 2, 4, 8, 10, 16, 32, 50, 64, 100, and 128. The default is 50.

**ADC speed:** This parameter selects between the two data rates on the ADS1232, which are called *high-speed* and *low-speed*. When high-speed mode is selected, `FAST` is shown; for low-speed mode, `SLOW` is shown.(1)

The actual data rate of the ADS1232 depends on the frequency of the master clock, $f_{CLK}$. In fast mode, the data rate is $f_{CLK}$/61440; in slow mode, the data rate is $f_{CLK}$/491520. See the ADS1232 data sheet for further information.

The default setting is low-speed mode.

**Calibration weight:** This parameter gives the expected mass of the calibration weight used in the calibration procedure (Section 2.3). The calibration mass can be given in any of the available units, in three significant figures. The unit is independent of the display unit.

Each digit in the mass is adjusted separately. The currently-selected digit flashes, and can be adjusted with the **PARM** buttons. The **VALUE** buttons are used to select the digit. The unit is adjusted in the same manner, and flashes when selected.

When the unit is changed, the value changes to the equivalent mass in the new unit.

**Channel Selection:** This parameter selects between the two analog input channels. Channel 1 uses either the header or the IN1 connections on the terminal block. Channel 2 uses the IN2 connections on the terminal block.

**Offset calibration:** This screen has the same function as it does in Analysis mode. See Calibration for information.

**Save parameters:** This screen allows the settings of the ADS1232REF to be stored in flash memory. It functions the same as it does in Analysis mode. When either **PARM** button is pressed on this screen, the ADS1232REF saves its settings to flash memory. These settings are loaded from flash memory when the board is reset or powered on. All operating parameters are saved, including scale calibration settings, voltage reference, display mode, and units.

**Version number:** This screen displays the version number of the ADS1232REF firmware.

(1) The ADS1232REF cannot detect the frequency of the ADS1232 master clock, so it cannot display the actual data rate of the ADS1232 device.


Copyright © 2005–2011, Texas Instruments Incorporated

# 3 Analysis Mode

In Analysis mode, the ADS1232REF analyzes code output from the ADS1232 and displays it in different ways. Table 3 summarizes the numerous display modes available, together with example displays.

**Table 3. Modes and Example Displays**

| | HEX CODE | DEC CODE | VOLTAGE | ENOB |
|---|---|---|---|---|
| Raw | 1992E9H | +1676001 | +499.488M | n/a |
| RMS | n/a | +5.789 | +17.495N | +23.18BIT |
| Peak-to-Peak | n/a | +31.256 | +90.293N | +21.92BIT |
| Averaged | n/a | +1676001 | +499.488M | n/a |

The ADS1232REF operates in Analysis mode when the mode switch is set to the **ANALYSIS** position. The default Analysis mode is RAW HEX.

To change measurement types, hold down **DISP** and press **UNIT**. This function cycles through the four available measurement types. When **DISP** is released, the newly selected measurement is made. To change units, press **MODE**. This option cycles through the available units for the active measurement type. This procedure can also be done while **DISP** is depressed; in that case, the new unit is shown by name on the display. The measurement modes are described in detail in Section 3.2.

The ADS1232 itself can be configured directly from this mode, as described in Section 3.1.

## 3.1 Switch Functions

**UNIT:** Pressing this switch resets the collection process for the RMS, peak-to-peak, and averaged measurements.

**MODE:** Cycles between available units. Not all units are available in all modes.

**DISP:** When this switch is pressed, the display shows the current measurement mode and unit. While **DISP** is still pressed, pressing **UNIT** cycles through the available measurement modes.

**CHIP:** Holding this switch down allows the settings of the ADS1232 to be changed, using the **VALUE**, **(ENT)** and **(SEL)** buttons.

Pressing **ENT** while **CHIP** is pressed down cycles through the available parameters—gain, data rate, and active channel.

The gain setting is displayed as `GAIN=` followed by the gain setting. Gains of 1, 2, 64 and 128 are available.

Data rate is shown on the display as `SPD=FAST` or `SPD=SLOW`. See ADC speed in the Parameters section for further information.

Channel information is shown as *Channel* followed by the active channel number (1, 2, or TEMP if measuring the temperature diode voltage).

If any of these parameters are changed during a multisample measurement, the measurement is restarted.

## 3.2 Measurement Modes

**Raw:** In this measurement, codes are read from the ADS1232 and displayed. No processing or analysis is done on the sample stream. Data can be displayed as hexadecimal codes, decimal codes, or volts.

Voltage is calculated according to Equation 3:

$$v = \frac{x}{2^{24} - 1} \bullet \frac{V_{REF}}{A} \quad (3)$$

Where:

- A is the converter gain (1, 2, 64, or 128), determined from the programmed gain setting
- $v_{REF}$ is the voltage at the converter reference input
- x is the ADC decimal code


Copyright © 2005–2011, Texas Instruments Incorporated

$V_{REF}$ is adjustable from Configuration mode. By default, it is 5V.

The voltage display is autoranging. All ranges are shown with six significant figures having three decimal places. The ranges are given in Table 4.

**Table 4. Voltage Display Ranges**

| | VOLTAGE RANGE | DISPLAY SUFFIX |
|---|---|---|
| Nanovolts | < 1µV | n |
| Microvolts | < 1mV | u |
| Millivolts | < 1V | m |
| Volts | ≥ 1V | V |

**RMS noise:** In this mode, a number of codes are read from the ADS1232, and an RMS noise calculation is performed on them, using the standard-deviation formula in Equation 4:

$$s_N = \sqrt{\frac{1}{N}\sum_{i=1}^{N}(x_i - \overline{x})^2} \tag{4}$$

The result can be displayed as decimal codes, volts, or effective bits (ENOB). For decimal codes, $s_N$ is displayed directly. (Hexadecimal is not available since $s_N$ is generally fractional.) For volts, $s_N$ is converted to a voltage as in raw mode.

**ENOB:** E is calculated using Equation 5:

$$E = \begin{cases} 24 - \log_2 s_N & : s_N \neq 0 \\ 24 & : s_N \neq 0 \end{cases} \tag{5}$$

The zero case is needed when a string of equal codes is read. This event can happen when the converter is clipping.

This measurement requires a number of codes to be read before a calculation can be made. Therefore, during the first run, the display shows the word `GOT` followed by the number of samples collected. This event happens when the mode is first entered, when the converter configuration changes, or when **NEW BLOCK** is pressed.

The number of codes used in the calculation is selected in Configuration mode; 50 codes are used in laboratory characterization, so this value is the default.

**Peak-to-peak noise:** In this mode, a number of codes are collected, and the absolute value of the difference between the minimum and maximum is calculated. The result can be displayed in decimal or hexadecimal codes, volts, or noise-free bits (ENOB). Volts are calculated as in raw mode; ENOB is calculated in the same way as in RMS mode.

The number of codes used in the calculation is selectable in Configuration mode.

**Averaged:** In this mode, a number of codes are collected, and the average is calculated. The result can be displayed in decimal codes or volts. (Hexadecimal is not available because the result may be fractional.) Volts are calculated as in raw mode.

The number of codes used in the calculation is selectable in Configuration mode.

### 3.3 Progress Graph

The row of apostrophes at the top of the display are used to indicate measurement progress. In Raw mode, the apostrophe moves across the display when data is being received from the converter. The apostrophe moves once for every eight samples collected from the ADC.

In block collection modes, the apostrophes form a bar graph. As the collection of a block proceeds, the bar graph increases. When the bar graph reaches all the way to the right, the new result is generated and collection restarts.


Copyright © 2005–2011, Texas Instruments Incorporated

## 3.4 Configuration

To enter Configuration mode, press the **PARM** buttons simultaneously. The four buttons then assume the functions shown in the CONFIG box. To exit Configuration mode, press the **PARM** buttons simultaneously again. This operation does not cause parameters to be adjusted; only button releases are detected in Configuration mode.

Configuration mode contains a number of adjustable parameters. To scroll through the available parameters, use the **VALUE** buttons. To change the parameter values, use the **PARM** buttons.

Some items in Configuration mode are not parameters, but commands or gateways to a submenu. These items are labelled as words with a question mark. To enter these items or to execute the command, press either **PARM** button.

Although a few of the parameters in the Analysis and Scale configuration menus are the same, the settings are kept separate between the modes. For example, input channel 1 can be selected in Scale mode while input channel 2 is selected in Analysis mode. In this setup, when the ADS1232REF switches from Scale to Analysis mode, the input channel becomes 2.

Table 5 summarizes the available parameters.

**Table 5. Parameters in Analysis Mode**

| PARAMETER | DISPLAY | VALUE RANGE | DESCRIPTION |
|---|---|---|---|
| Averages | AVG= | 2–128 | Number of points for average, peak-to-peak, and RMS modes |
| Voltage Reference | VREF= | 0.5–5.0 | Voltage used in various calculations |
| Power-down mode | PDWN? | — | Power-down mode; see text |
| Offset calibration | OCAL? | — | Offset calibration; see text |
| Save parameters | SAVE? | — | Save parameters; see text |
| Version number | V1.1.0 | — | Firmware version number display |

### 3.4.1 Parameters

**Averages:** Number of points to use in Averaged, RMS noise, and Peak-Peak calculations. The choices available are 2, 4, 8, 10, 16, 32, 50, 64, 100, and 128. The default setting is 50.

**Voltage reference:** To convert voltages to codes, the ADS1232REF requires the voltage reference level. Since this level cannot be measured, it must be selected manually. This parameter allows the reference level to be set.

Each digit of the voltage reference is selected and adjusted separately. Use the **VALUE** buttons to select a digit, and the **PARM** buttons to adjust it. The selected digit flashes.

This parameter does not affect the actual voltage reference used. If it is incorrect, voltage calculations will be wrong. The voltage reference is typically the +5V rail; the default value for this parameter is 5.0V.

**Power-down mode:** When either **PARM** button is pressed on this screen, the ADS1232REF causes the ADS1232 to enter power-down mode. This action occurs by pulling the $\overline{\text{PDWN}}$ line low. While the $\overline{\text{PDWN}}$ line is low, the display reads POWER DN. When a button is pressed from this display, the ADS1232REF powers the converter on and returns to the analysis display, exiting configuration mode.

This mode can be used to test the current consumption of the board when the ADS1232 is powered down.

**Offset calibration:** When either **PARM** button is pressed on this screen, the ADS1232REF initiates a hardware offset calibration on the ADS1232 by providing two extra shift clock cycles on the next data read cycle, as described in the ADS1232 data sheet.

When either **PARM** button is pressed, the display briefly shows OK, indicating that calibration was performed.

Offset calibration is performed when the ADS1232REF is powered on, but is not automatically performed at any other time.

**Version number:** This screen displays the version number of the ADS1232REF firmware.


Copyright © 2005–2011, Texas Instruments Incorporated

# 4 Using the PC Software

The ADS1232REF is supplied with software that performs various analyses on data received from the board via the USB connection. It also provides a means of recording received data to a file. The software is designed to be used with the ADS1232REF operating in Analysis mode. Not all commands will work with the ADS1232REF operating in Scale mode; the results will be unpredictable.

The program currently runs only on a Microsoft Windows® platform. In Windows, the program communicates with the ADS1232REF using a *virtual COM port* driver that causes the USB connection to appear to Windows as a normal serial port. The necessary driver is installed with the EVM software.

## *4.1 Installation and Setup*

The ADS1232REF software is distributed in an installer program called `ADS123x-setup-withLVRT-1.1.1.exe` (the version number in the file name may differ), distributed on the CD-ROM or available from Texas Instruments. To install the software, execute this program. The program guides you through the installation process.

Note the following points:

- The installer installs two packages: the ADS123xREF program itself, and the TI Virtual COM Port driver.
- If any version of the ADS123xREF program is already installed, the installer uninstalls it and quits. You must run the installer again to complete the installation.
- If the Virtual COM Port driver is already installed, the installer offers to uninstall it. Do ***not*** uninstall it; cancel this part of the installation.

The installer displays messages reminding you of these points.

### 4.1.1 First Time Connection of the ADS123xREF

If the ADS1232REF has never been connected to your computer before, Windows detects the device as *unknown hardware* and takes you through a series of dialogs to install the correct driver. Accept the default settings; the driver is present and only needs to be copied to the correct location. If the driver is successfully installed, Windows does not issue this prompt again.

On some computers, if the board is connected to a different USB port, the operating system detects the board as *new hardware*. If this action occurs, proceed through the new hardware dialogs as usual, and allow Windows to *reinstall* the driver.

## *4.2 The Display*

The ADS1232REF software has a single display; see Figure 6 for a typical display example. The major elements of the display are discussed next.

**Strip chart:** This feature displays a scrolling graph of data received from the board.

**Histogram:** A sliding histogram of data received from the board is also displayed. The number of points used in the analysis is adjustable.


Copyright © 2005–2011, Texas Instruments Incorporated

**DC analysis section:** The results of RMS noise analysis, peak-to-peak analysis, and a running voltage number are shown in this section. The number of analysis points and the reference voltage used for voltage calculations are also adjustable here.

**Recording section:** This feature controls recording of data to a file.

**Device control section:** This section allows device parameters to be adjusted.

**Status display:** This display shows messages indicating the current state of the program.

**Acquire button:** This button starts and stops the running acquisition of data.

## 4.3 Starting the Program

When the program launches, a screen similar to that shown in Figure 6 appears. Immediately after launch, the program searches all available serial ports for the board. To do this step, it opens every available serial port in turn, testing it to see if there is an ADS1232REF connected. The program uses the first ADS1232REF it finds.

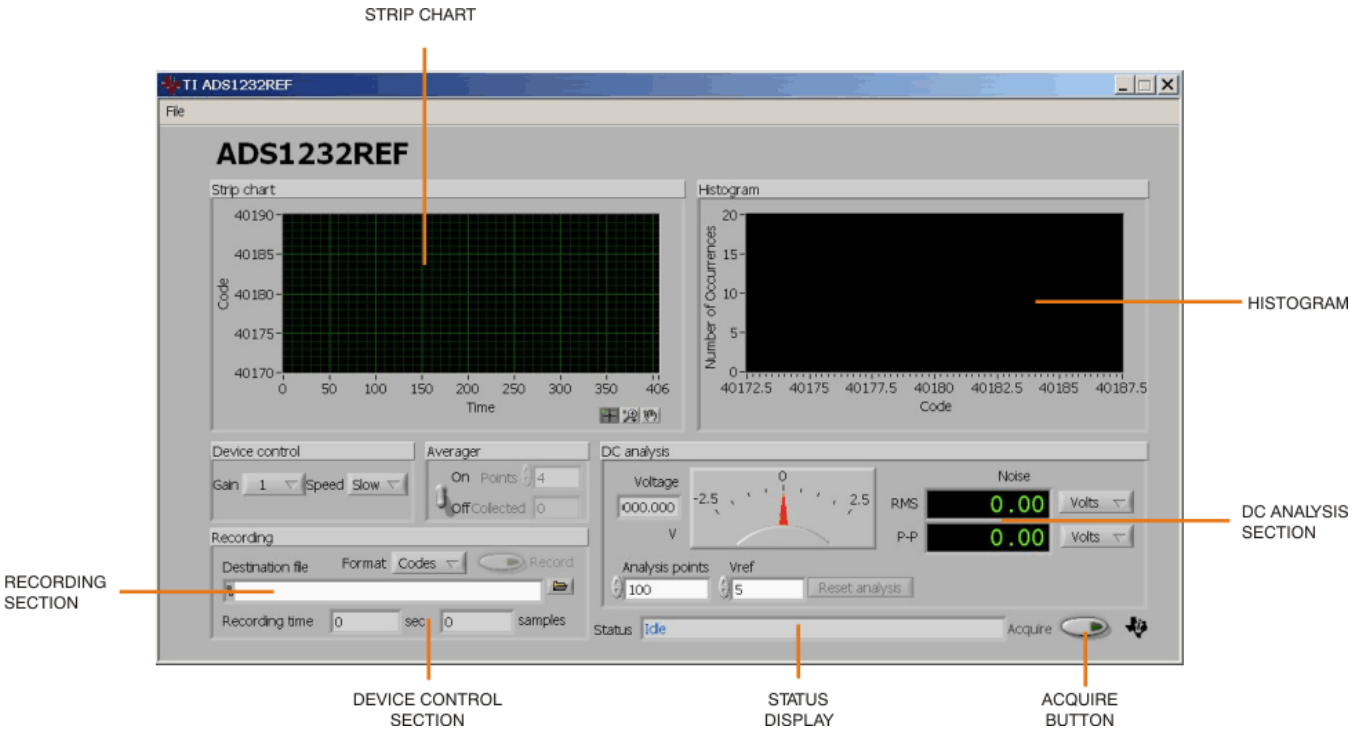


**Figure 6. ADS1232REF Software Display**

Although this procedure is conceptually simple, it may not go as smoothly as expected. The following process ensures that the board is found correctly. Note that Steps 1–3 can be done in any order.

Step 1. Apply power to the ADS1232REF.

Step 2. Plug in the USB connector.

Step 3. Start the program.

Step 4. Watch the status display. It reads *Scanning* followed by the name of the serial port being tested. When the board is found, the display reads *Idle*. Until a board is found, the display cycles through every port, spending approximately one second on each port.

Once the board is detected, the program enters Idle mode and is ready for use.

**NOTE:** If the board is never detected, it is still possible (and safe) to exit the program during the search process. If the board does not respond, pressing the USB Reset switch (SW1) may help.


Copyright © 2005–2011, Texas Instruments Incorporated

## 4.4 Analysis or Record Mode

The program operates in analysis mode or record mode. Both modes acquire the data and update the displays, but record mode also writes the result to the selected file.

## 4.5 Adjusting Device Parameters

To adjust device parameters, use the controls in the *Device control* box. Each control corresponds to a setting that can also be made from the board itself.

## 4.6 Acquiring Data

To start receiving and analyzing data from the board, click the **Acquire** button, located in the lower right-hand corner of the display. The program begins to receive data from the board, displaying the results in near-real time.

It is not possible for the program to adjust board parameters in Analysis mode. For this reason, the board controls are disabled and dimmed while Analysis occurs.

### 4.6.1 Averaging

The PC software can process data collected from the board using a sliding-window averager. The controls for the averager are found in the *Averager* box.

To turn the averager on, use the **Averaging** switch. The number of points averaged is set by the *Points* control, and the number of points currently collected is shown in the *Collected* box.

When the averager is turned on, it is cleared. To reset the averager, turn it off and then on again.

The histogram displays an integer representation of the averaged data. Note that when selecting a high number of averages, the integer results might include only one code; the histogram for that case is blank. The strip chart display shows both the full precision result of the averages and the integer version, as illustrated in Figure 7.

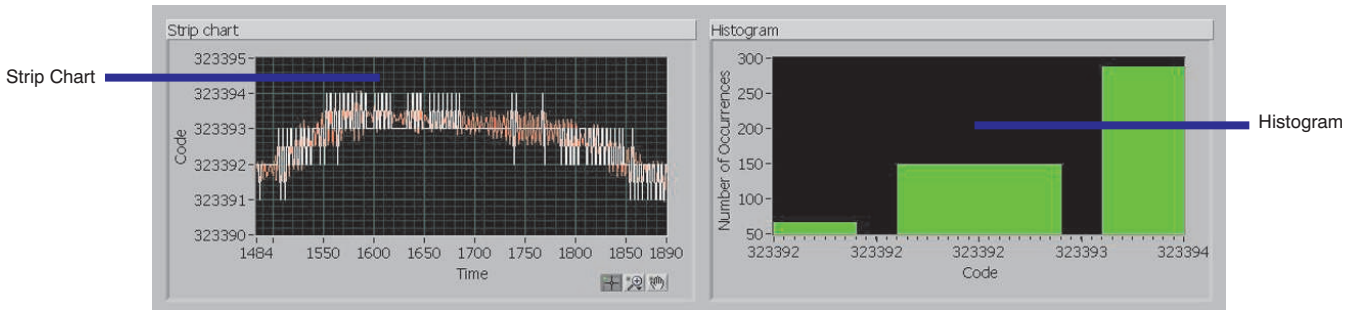


**Figure 7. ADS1232REF Average Data**


Copyright © 2005–2011, Texas Instruments Incorporated

### 4.6.2 Block Analysis Length

The histogram, RMS, and peak-to-peak calculations require a set of samples. These calculations are updated with every group of samples received, and are performed on a block of the most recently acquired (or averaged) samples.

The number of samples used is set using the *Analysis points* control. By default, this number is 50, but can be changed at any time. This value also controls the RMS and peak-to-peak noise analysis lengths.

If the number of samples collected is not yet equal to the number of samples specified by the *Analysis points* control, 0s are substituted for the samples not yet received.

In Analysis mode, the analysis can be reset using the button marked *Reset analysis*. This function clears the internal analysis buffer. This button cannot be used outside of Analysis and Recording modes.

Analysis is automatically reset when Analysis and Recording modes are entered.

### 4.6.3 RMS and Peak-to-Peak Noise Analysis

The RMS and peak-to-peak noise analysis calculations are performed in exactly the same way as they are in the ADS1232REF firmware, as described in Section 3.2. Each calculation can be displayed in units of volts, codes, or bits, as on the board. See Section 3.2 for detailed descriptions of the calculations.

The number of samples used in each calculation is set using the *Analysis points* control. By default, this number is 50, but can be changed at any time. This control also controls the histogram length.

### 4.6.4 Displaying Volts

When units of volts are displayed, the program must have a value for the reference voltage applied to the ADS1232 to properly calculate the voltage. Because this voltage cannot be measured using the ADS1232REF, it is set manually using the *Vref* control.

The value of *Vref* defaults to 5V, because the reference is normally taken from the 5V power supply. If a different reference voltage level is used, the value of *Vref* should be changed to reflect the different level, so that voltage calculations are performed correctly.

The *Vref* control also affects voltages recorded in *Record* mode.

### 4.6.5 Block Acquisition

To enable the program to run reliably on slower computers, results are not calculated each time a sample is received. Instead, groups of samples are collected and added to an analysis buffer that is processed as it becomes full. This processing delay is timed so that the display updates at least every 0.75 seconds.

## *4.7 Data Recording*

The ADS1232REF software can record incoming samples to a text file. This file can be loaded into other programs for analysis. Data recording is performed using the controls in the *Recording* box.

Follow these steps to record data to a file:

Step 1. Select or create a destination file. Either type the file path directly into the *Destination file* control, or click the small open folder icon to the right of the control to open a dialog box from which a file can be selected. If the selected file exists already, the program will display a warning. Otherwise, type the name of the file that you wish to create.

Step 2. Select a data format. Samples can be recorded as raw (decimal) codes or as volts. In both cases, the data are written to the file as ASCII data, and the file is a text file.

Step 3. Click the *Record* button. The program begins to collect and analyze data from the board, as well as write it to the selected file. As recording proceeds, the recording time indicators are updated.

Step 4. Click *Record* again to stop the recording when the desired amount of data has been collected.

The selected file is not opened or created until recording begins. If an error occurs at that time, recording stops and a message displays in the status box.


Copyright © 2005–2011, Texas Instruments Incorporated

Recording time is not measured, but calculated from the number of samples collected. The speed is used to determine the amount of time for each sample. If the data rate is changed at the board, the recording time will be incorrect. This change does not affect the data file, except that samples continue to be collected with the different settings.

In Recording mode, analysis proceeds as in Analysis mode; Recording mode is identical to Analysis mode, except that data is written to a file. See the previous section for documentation on Analysis mode.

When Recording mode begins, if the selected file exists, it is erased and overwritten. The pre-existence of the file is checked only when a new file is selected.

### 4.7.1 File Format

Data files begin with a header that contains the text *collected from ADS1232REF*, the time of recording, and the speed and gain. Following this header, values are written in either volts or raw codes, with one value per line. Line separators are in DOS format, consisting of a carriage return and a line feed. This format can be examined in a text editor and loaded or imported into most other software, including spreadsheets.

Voltages are calculated using the reference voltage given in the *Vref* control; it is therefore important that this value be correct.

## 5 Serial Console

The ADS1232REF provides a console mode that can be used with any Windows terminal emulation program, such as Hyperterm™. In Windows, this configuration is done through the Virtual COM Port driver supplied with the EVM software, causing the ADS1232REF to appear in Windows as an extra serial port.

### *5.1 Using the Console*

To use the console, load a terminal emulation program and connect to the EVM serial port using the following parameters:

- Baud rate: 115200
- Data bits: 8
- Parity: none
- Stop bits: 1
- Flow control: none
- Local echo: off
- Terminal emulation: ANSI or VT100

Setting up the terminal program is beyond the scope of this document; see the specific terminal program documentation for details.

To locate the serial port, try higher port numbers first. When the board first starts, it outputs the following message:

```
ADS1232REF 1.1.0c (c)2005-2007 Texas Instruments 1232>
```

Pressing **Reset** causes the board to output this message.

The command prompt is always `1232>` . Commands are entered at this prompt. Commands consist of one letter possibly followed by arguments. The format of the arguments depends on the command.

Commands are case insensitive. Upper-case characters are printed here, but lower-case characters also work.


Copyright © 2005–2011, Texas Instruments Incorporated

The available commands are listed in Table 6. In this table, values in brackets indicate a range or list of possible characters. A dash (–) indicates a range, and commas (,) indicate a list.

**Table 6. Console Mode Commands**

| COMMAND | FORMAT | OPERATION |
|---|---|---|
| P | P [0-3] | Set PGA |
| R | R [F,S] | Set data rate |
| K | K | Perform offset calibration |
| V | V | Show firmware version |
| S | S | Start streaming |
| D | D | Read data once |
| C | C | Set input channel |
| Q | Q | Query parameters |

Console mode does not interrupt standalone operation. It is always available, even when the standalone mode is in use. However, if parameters are changed using both the console and standalone modes, parameters may become out of sync.

## 5.2 Command Reference

### 5.2.1 P—Set PGA

This command sets the gain of the ADS1232 PGA, according to these parameters:

- P0—sets gain to 1
- P1—sets gain to 2
- P2—sets gain to 64
- P3—sets gain to 128
- P—(with no argument) prints the current gain setting

### 5.2.2 R—Set Data Rate

This command sets the speed of the ADS1232 according to these parameters:

- RF—sets rate to fast
- RS—sets rate to slow
- R—(with no argument) prints the current data rate setting

  Note that the actual data rate depends on the frequency of the device clock.

### 5.2.3 K—Perform Offset Calibration

Initiates an offset calibration on the ADS1232, using the method described in the product data sheet.

### 5.2.4 V—Show Version

Displays a message containing the firmware version and copyright notice.

### 5.2.5 S—Start Streaming

When **S** is issued, the ADS1232REF begins printing raw output codes from the ADS1232 in hexadecimal format, separated by new lines. The device iterates continuously until a character is received from the serial port.

**S** is used primarily by the EVM software for data collection.


Copyright © 2005–2011, Texas Instruments Incorporated

### 5.2.6 D—Collect One Sample

Issuing the **D** command causes the ADS1232REF to report the latest collected sample from the ADS1232. The sample is displayed in raw hexadecimal.

### 5.2.7 C—Set Channel

This command sets the desired channel of the ADS1232 programmable gain amplifier in the following manner:

- C0—sets input to channel AIN1
- C1—sets input to channel AIN2
- CT—sets input channel to specified temperature
- C—(with no arguments) provides the current channel setting

### 5.2.8 Q—Query Parameters

**Q** causes the ADS1232REF to issue a coded string summarizing the current settings. The format of the string is:

```
P[0-3]R[F,S]OIC[0,1,T]
```

followed by a carriage-return and linefeed.

## 6 Hardware

A block diagram of the ADS1232REF is shown in Figure 8. The schematic and layout drawings are given in Section A.2 at the end of this document.

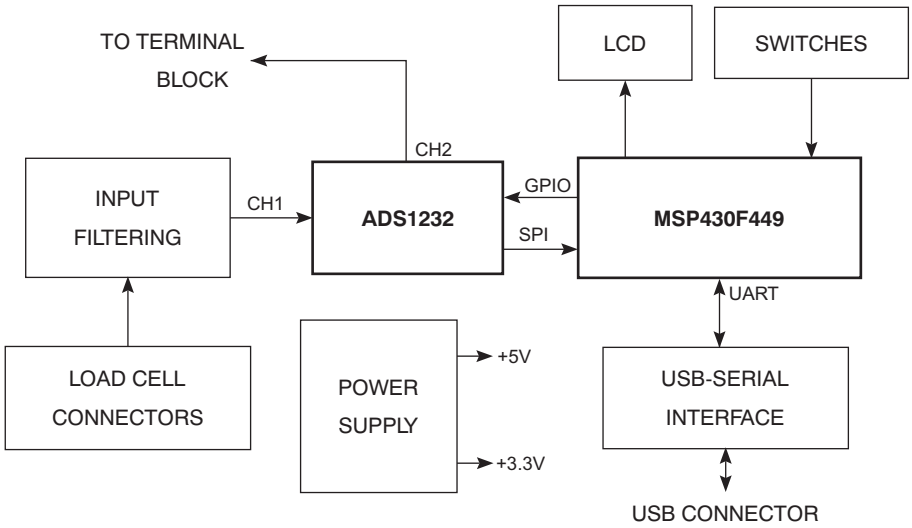


**Figure 8. ADS1232REF Hardware Block Diagram**

### 6.1 Microcontroller

The ADS1232REF uses the MSP430F449 microcontroller. This device provides an LCD controller, hardware SPI and UART interfaces, and a multiplier. The latter is important because the firmware must perform many multiplications.


Copyright © 2005–2011, Texas Instruments Incorporated

## 6.2 Power Supply

The ADS1232REF operates from +5VDC and +3.3VDC. These supplies are generated by linear regulators U1 and U2. Input power comes from either wall-adapter connector J2, or battery connector BT1. J2 is switched; when a connector is plugged in, BT1 is disconnected.

Noise is important because the ADS1232 voltage reference is typically taken from the power supply. The supplies are heavily bypassed to reduce noise.

## 6.3 User Interface

The ADS1232REF user interface consists of the display and switches SW2–5 and SW8. Switches are connected to interrupt-capable GPIOs on the microcontroller, allowing them to wake the microcontroller from sleep mode.

## 6.4 ADC Section

The ADC section consists of the ADS1232 device itself and ancillary circuitry.

All signals on the ADS1232 (except for the Channel 2 inputs) are filtered by pass-through capacitors that help to reject electromagnetic interference (EMI), radio frequency interference (RFI), and noise generated by the digital circuitry.

### 6.4.1 Input Circuitry

The ADS1232REF is designed to connect to resistive bridge sensors, particularly load cells. The ADS1232 has two channels. Channel 2 is a direct connection, and does not have filtering. Channel 1 is filtered by pass-through capacitors C46 and C47 and differential capacitor C7. Common-mode capacitors C32 and C29 provide additional RF rejection.

### 6.4.2 Load Cell Header

The load cell header, J6, provides a convenient terminal for load cells having a properly fitted header connector. It provides excitation and sense connections. The negative excitation line is connected to ground through analog switch U7, which is controlled by the microcontroller. This arrangement allows for sleep-and-convert control, which can reduce self-heating in the load cell and conserve power.

The load cell connector's pinout is given in Table 7. For connection examples, see Section 1.4.3 and Section 1.4.4.

**Table 7. Load Cell Header Pinout**

| PIN NO. | PIN NAME | FUNCTION |
|---|---|---|
| 1 | EXC+ | Positive excitation; connected to +5VA |
| 2 | EXCSNS+ | Positive sense; connected to external positive reference input |
| 3 | SIG+ | Input for positive load cell output |
| 4 | SIG– | Input for negative load cell output |
| 5 | EXCSNS– | Negative sense; connected to external negative reference input |
| 6 | EXC– | Negative excitation; connected to ground through switch U7 |

### 6.4.3 Input Terminal Block

The input terminal block consists of J4 and J5. It provides connections to all of the analog inputs on the ADS1232, and connections to the ADS1232REF voltage reference network. Unlike the load cell header, there are no dedicated excitation outputs. Instead, connections to ground and the 5V supply are provided, and neither are switched. Also, unlike the header, channel 2 inputs are available on the terminal block.


Copyright © 2005–2011, Texas Instruments Incorporated

The terminal block pinout is given in Table 8.

**Table 8. Terminal Block Pinout**

| TERMINAL NAME | FUNCTION |
|---|---|
| +5VA | 5V analog power-supply output |
| IN1– | Channel 1 negative input |
| IN1+ | Channel 1 positive input |
| REF+ | Positive reference input |
| IN2– | Channel 2 negative input |
| IN2+ | Channel 2 positive input |
| REF– | Negative reference input |
| GND | Board ground |

### 6.4.4 Voltage Reference

The ADS1232REF is designed to operate either ratiometrically or with an external reference. The two modes are selected using switch SW7.

In the EXT position, the ADS1232 reference inputs are taken from the load cell connectors. In the +5VA position, the ADS1232 positive reference input comes from the 5V analog supply, and the negative reference input is connected to ground.

After the switch is placed a filtering network that consists of resistors R14 and R15, bulk capacitor C4, pass-through capacitors C44 and C45, and filtering capacitors C28, C30, and C31.

### 6.4.5 Input Shorting Jumpers

The shorted-input noise test for the ADS1232 is best performed with both inputs connected to 2.5V. To make this test easy to perform, jumpers J7 and J8 are provided.

Jumper J8 shorts the inputs of channel 1 together. Jumper J7 connects the inverting input to a voltage divider made from R25 and R26, dividing the power supply by 2. This voltage divider electrically resembles an ideal bridge sensor.

## *6.5 USB Interface*

The USB interface can be used for firmware download or data communications. Its role in firmware download is discussed in Section 6.6.

The USB interface consists of USB-to-serial converter U4, a Texas Instruments TUSB3410. This device incorporates a USB interface module, a microcontroller, and a 16550-type UART. Driver software is available that causes the device to appear as a serial port on the host PC.

The USB interface is powered separately from the rest of the ADS1232REF; it takes power from the USB line, through linear regulator U3.

The serial port side of U4 is connected to the microcontroller UART signals. To keep the power domains separate, and to keep the USB and microcontroller sides from inadvertently powering each other, the UART is connected through isolators U8 and U9.

## *6.6 Programming Connections*

The MSP430 can be programmed via the dedicated JTAG port or the serial bootstrap loader.

The JTAG connector is not factory-installed. The footprint is similar to an edge-card pattern, and accepts a standard, dual-row 0.100in header mounted on the side of the board. This header is compatible with MSP430 parallel-port JTAG adaptors.


Copyright © 2005–2011, Texas Instruments Incorporated

To allow firmware to be downloaded through USB, U4 is connected to the microcontroller bootstrap loader pins. The DTR and RTS pins are connected to the RST and TCK inputs on the microcontroller to allow the serial bootstrap loader to operate. These lines are not isolated; instead, they are switched through SW9, which also connects USB ground and power to the microcontroller ground and power. Normally this switch is open; it is only switched on when firmware is to be downloaded through USB. This feature also protects the microcontroller from unknown states on these pins at power-up.

# Appendix A Schematic and Layout

The printed circuit board (PCB) layouts for the top and bottom sides of the ADS1232REF are shown in Figure 9 and Figure 10, respectively. The schematic for the ADS1232REF is shown in Section A.3. The bill of materials is provided in Table 9.

## *A.1 Bill of Materials*

**Table 9. ADS1232REF Bill of Materials**

| REFERENCE DESIGNATOR | DESCRIPTION | MANUFACTURER | MFG. PART NUMBER |
|---|---|---|---|
| R23, R24 | 0 1/16W 1% Chip Resistor | Panasonic | ERJ-3GEY0R00V |
| R17 | 20 1/4W 5% Chip Resistor | Panasonic | ERJ-8GEYJ200V |
| R2, R3 | 33 1/10W 5% Chip Resistor | Panasonic | ERJ-3GEYJ330V |
| R12–R15 | 100 1/10W 5% Chip Resistor | Panasonic | ERJ-3GEYJ101V |
| R11 | 220 1/10W 5% Chip Resistor | Panasonic | ERJ-3GEYJ221V |
| R1 | 1.5K 1/10W 5% Chip Resistor | Panasonic | ERJ-3GEYJ152V |
| R4–R10, R16 | 10K 1/10W 5% Chip Resistor | Panasonic | ERJ-3GEYJ103V |
| R25, R26 | 20K 1/16W 1% Chip Resistor | Panasonic | ERJ-3EKF2002V |
| R18, R27 | 47K 1/10W 5% Chip Resistor | Panasonic | ERJ-3GEYJ473V |
| R22 | 200k Potentiometer 200kΩ, 1/4in SQ | Bourns | 3362U-1-204LF |
| R19-R21 | 221k 1/16W 1% Chip Resistor | Panasonic | ERJ-3EKF2213V |
| C1, C2, C16, C17 | 22pF 50V Ceramic Chip Capacitor, ±0.5pF, NPO | TDK | C1608C0G1H220J |
| C29, C30, C31, C32 | 100pF 16V PPS Film Chip Capacitor, 2% | Panasonic | ECH-U1C101GX5 |
| C38–C43, C48, C49 | 100pF Filter High Frequency, 100pF | Murata | NFM21CC101U1H3D |
| C5, C11, C13–C15 | 0.01µF 50V Ceramic Chip Capacitor, ±10%, X7R | TDK | C1608X7R1H103K |
| C12, C21, C33–C36 | 0.1µF 50V Ceramic Chip Capacitor, ±10%, X7R | TDK | C1608X7R1H104K |
| C6, C7 | 0.1µF 16V PPS Film Chip Capacitor, 2% | Panasonic | ECH-U1C104GX5 |
| C9, C10, C22 | 1µF 16V Ceramic Chip Capacitor, ±10%, X7R | TDK | C1608X7R1C105K |
| C37, C44–C47 | 1µF Filter High-Frequency, 1.0µF | Murata | NFM21PC105B1C3D |
| C23–C28 | 2.2µF 6.3V Ceramic Chip Capacitor, ±20%, X5R | TDK | C1608X5R0J225M |
| C3 | 4.7µF 16V Ceramic Chip Capacitor, +80/-20%, Y5V | TDK | C2012Y5V1C475Z |
| C8, C18–C20 | 10µF 16V Ceramic Chip Capacitor, ±20%, X7R | TDK | C3216X7R1C106M |
| C4 | 100µF 10V Tantalum Chip Capacitor, ±10% | Kemet | T494D107K010AT |
| U6 | Analog-to-Digital Converter | Texas Instruments | ADS1232IPW |
| U5 | Microcontroller | Texas Instruments | MSP430F449IPZ |
| U2, U3 | Linear Voltage Regulator, +3.3V | Texas Instruments | TPS77133DGKG4 |


Copyright © 2005–2011, Texas Instruments Incorporated

**Table 9. ADS1232REF Bill of Materials (continued)**

| REFERENCE DESIGNATOR | DESCRIPTION | MANUFACTURER | MFG. PART NUMBER |
|---|---|---|---|
| U1 | Linear Voltage Regulator, +5V | Texas Instruments | TPS76350DBVG4 |
| U4 | USB to Serial Converter | Texas Instruments | TUSB3410VFG4 |
| U7 | Analog Switch, SPST | Texas Instruments | TS5A3166DCKR |
| U8, U9 | Digital Isolator | Texas Instruments | ISO721DG4 |
| U10, U11 | Inverter, Single Gate | Texas Instruments | SN74LVC1G04DBVRG4 |
| BT1 (+) | 9V Battery Clip Female | Keystone Electronics | 594 |
| BT1 (–) | 9V Battery Clip Male | Keystone Electronics | 593 |
| J1 | USB Type B Socket | Mill-Max | 897-43-004-90- 000000 |
| J2 | 2.5mm Power Jack | CUI | PJ-102BH |
| J6 | 1 X 6 Header | Samtec | TSW-106-07-G-S |
| J7, J8 | 1 X 2 Header | Samtec | TSW-102-07-G-S |
| J4, J5 | 3.5mm PCB Terminal Block, 4-position | On Shore Technology | ED555/4DS |
| N/A | ADS1232 REF PCB | Texas Instruments | 6474748 |
| D1 | 30V, 200mA Schottky Diode | Fairchild Semiconductor | BAT54 |
| D2 | Green LED, SMD | Lumex | SSL-LX3052GD |
| L1 | Ferrite Bead Core, 4A 100MHz | Panasonic | EXC-ML20A390U |
| LCD1 | 8-Character LCD Display, TN Type | Varitronix | VIM878-DP-RC-S-LV |
| SW1–SW6 | Push-button Switch | ITT | KSAIM211LFT |
| SW7 | DPDT Slide Switch, Top Actuator | NKK | SS22SDP2 |
| SW8 | SPDT Slide Switch, Top Actuator | NKK | SS12SDP2 |
| SW9 | 4PDT Slide Switch, RA Actuator | E-Switch | EG4208 |
| TP15 | Testpoint | Keystone Electronics | 5011 |
| X1 | 12MHz Quartz Crystal | Citizen | CS10-12.000MABJUT |
| X2 | 32.678kHz Quartz Crystal | Epson | C-002RX 32.7680KE: PBFREE |


Copyright © 2005–2011, Texas Instruments Incorporated

## A.2 PCB Layout

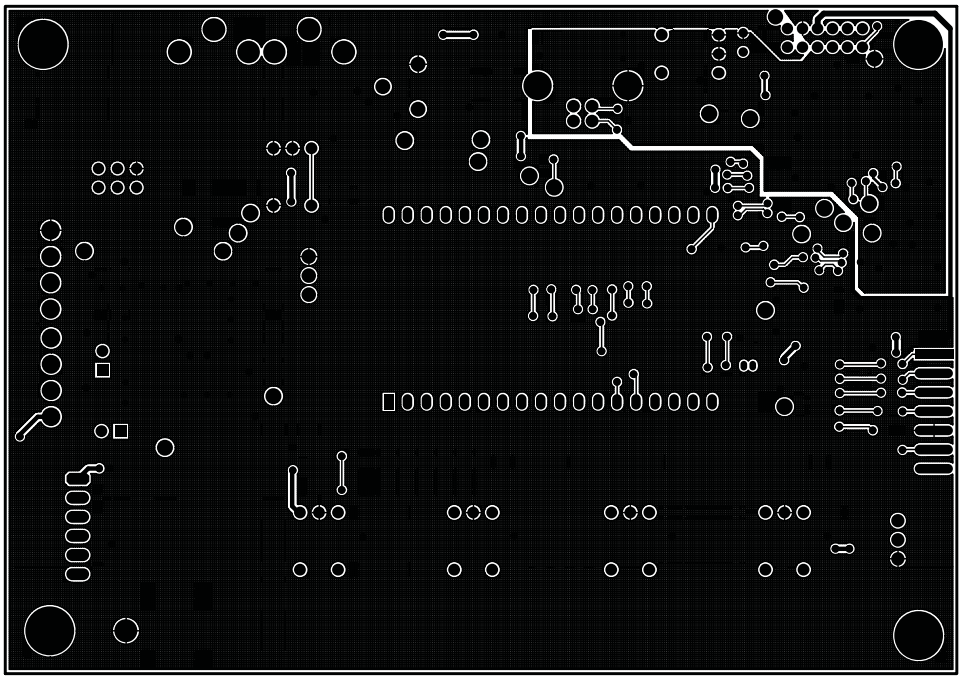

**Figure 9. ADS1232REF PCB—Top Side**

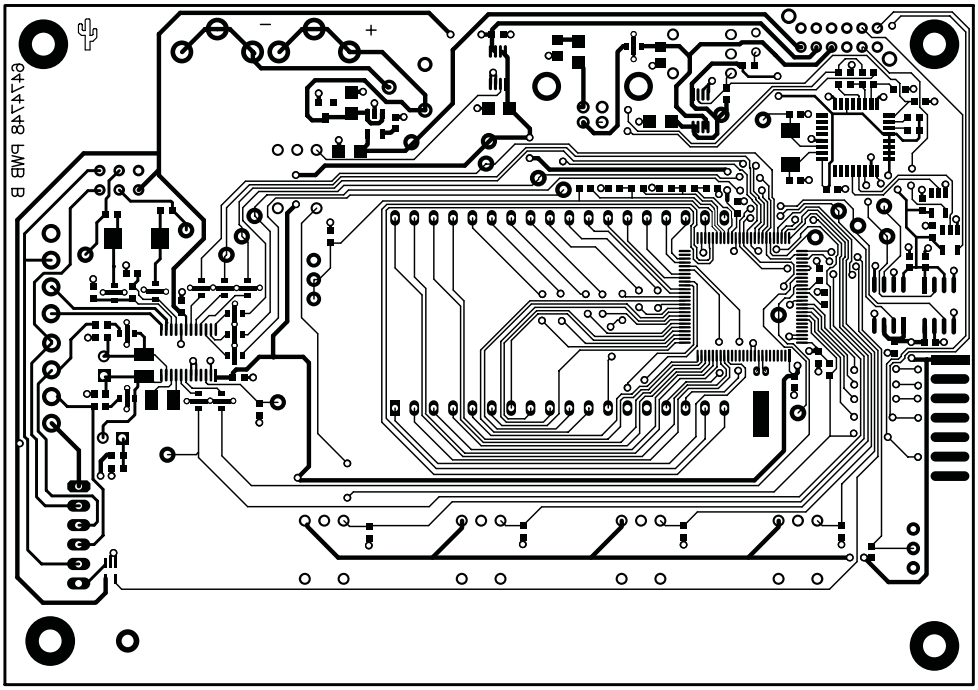

**Figure 10. ADS1232REF PCB—Bottom Side**


Copyright © 2005–2011, Texas Instruments Incorporated

## A.3 Schematics

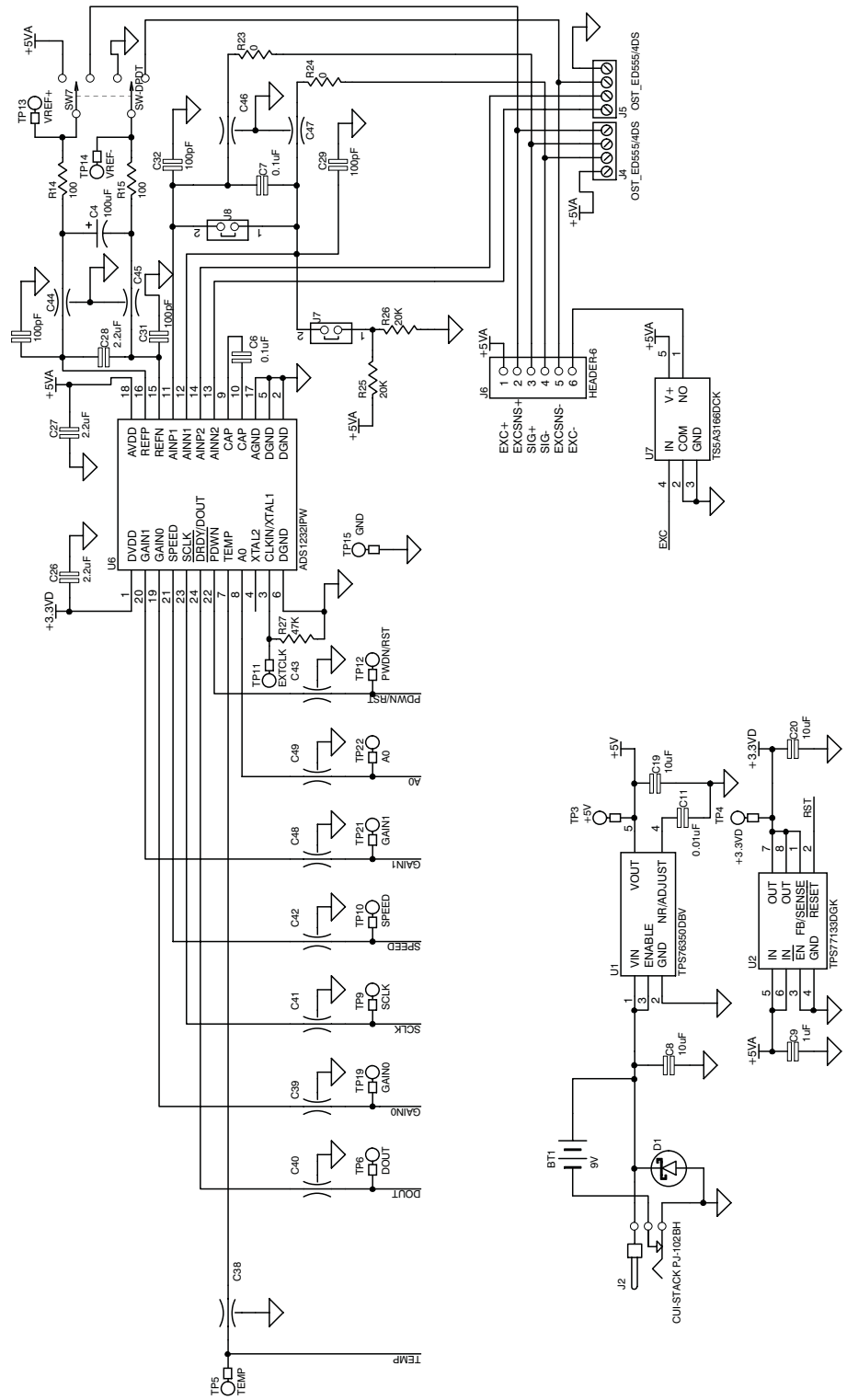


**Figure 11. ADS1232REF Schematic—ADC**



Copyright © 2005–2011, Texas Instruments Incorporated

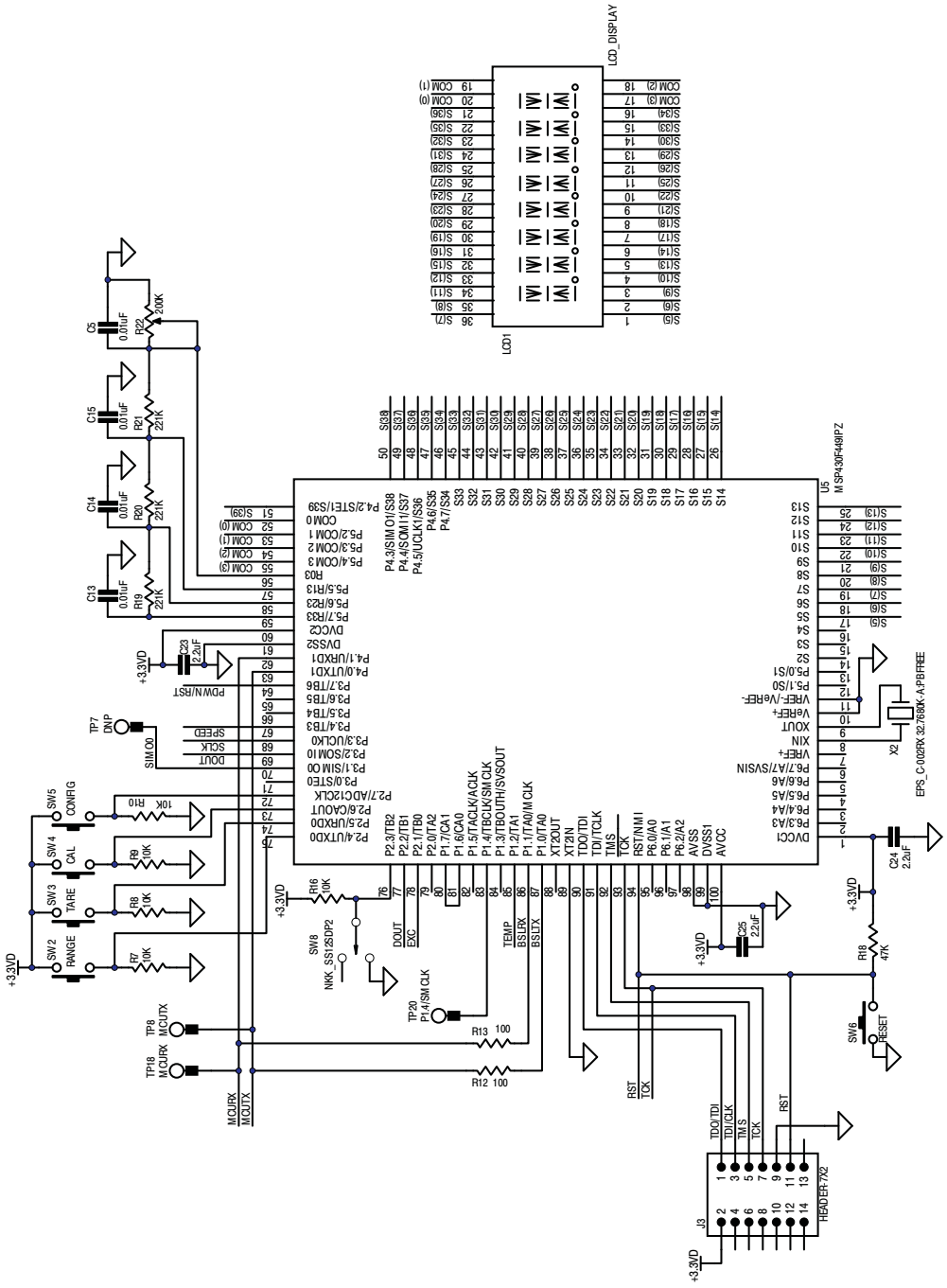


**Figure 12. ADS1232REF Schematic—MCU**


Copyright © 2005–2011, Texas Instruments Incorporated

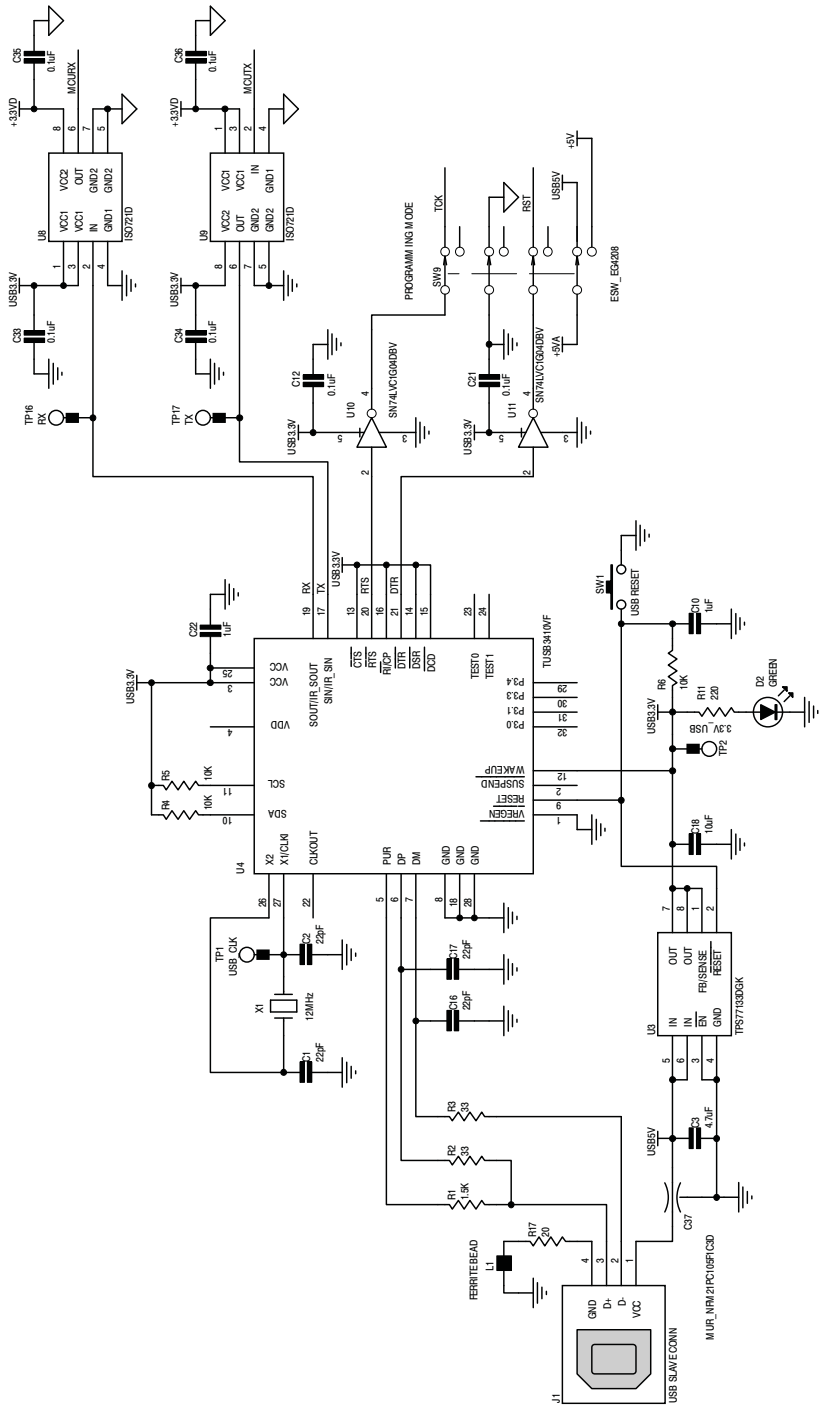

**Figure 13. ADS1232REF Schematic—USB**



Copyright © 2005–2011, Texas Instruments Incorporated

# Revision History

**Changes from A Revision (September, 2007) to B Revision** **Page**


- Corrected nomenclature errors in Section 1.7.1 ..... 6
- Revised button descriptions in procedure to obtain a calibration weight ..... 7
- Updated Section 2.1.1 ..... 8
- Changed button descriptions in *Configuration* section ..... 9
- Updated Table 2 ..... 9
- Revised Section 2.4.1 ..... 10
- Corrected button nomenclature in Section 3 ..... 11
- Revised button nomenclature in Section 3.4 ..... 13
- Corrected button nomenclature errors in Section 3.4.1 ..... 13
- Changed first paragraph of Section 4 ..... 14


NOTE: Page numbers for previous revisions may differ from page numbers in the current version.


Copyright © 2005–2011, Texas Instruments Incorporated

## IMPORTANT NOTICE

Texas Instruments Incorporated and its subsidiaries (TI) reserve the right to make corrections, modifications, enhancements, improvements, and other changes to its products and services at any time and to discontinue any product or service without notice. Customers should obtain the latest relevant information before placing orders and should verify that such information is current and complete. All products are sold subject to TI's terms and conditions of sale supplied at the time of order acknowledgment.

TI warrants performance of its hardware products to the specifications applicable at the time of sale in accordance with TI's standard warranty. Testing and other quality control techniques are used to the extent TI deems necessary to support this warranty. Except where mandated by government requirements, testing of all parameters of each product is not necessarily performed.

TI assumes no liability for applications assistance or customer product design. Customers are responsible for their products and applications using TI components. To minimize the risks associated with customer products and applications, customers should provide adequate design and operating safeguards.

TI does not warrant or represent that any license, either express or implied, is granted under any TI patent right, copyright, mask work right, or other TI intellectual property right relating to any combination, machine, or process in which TI products or services are used. Information published by TI regarding third-party products or services does not constitute a license from TI to use such products or services or a warranty or endorsement thereof. Use of such information may require a license from a third party under the patents or other intellectual property of the third party, or a license from TI under the patents or other intellectual property of TI.

Reproduction of TI information in TI data books or data sheets is permissible only if reproduction is without alteration and is accompanied by all associated warranties, conditions, limitations, and notices. Reproduction of this information with alteration is an unfair and deceptive business practice. TI is not responsible or liable for such altered documentation. Information of third parties may be subject to additional restrictions.

Resale of TI products or services with statements different from or beyond the parameters stated by TI for that product or service voids all express and any implied warranties for the associated TI product or service and is an unfair and deceptive business practice. TI is not responsible or liable for any such statements.

TI products are not authorized for use in safety-critical applications (such as life support) where a failure of the TI product would reasonably be expected to cause severe personal injury or death, unless officers of the parties have executed an agreement specifically governing such use. Buyers represent that they have all necessary expertise in the safety and regulatory ramifications of their applications, and acknowledge and agree that they are solely responsible for all legal, regulatory and safety-related requirements concerning their products and any use of TI products in such safety-critical applications, notwithstanding any applications-related information or support that may be provided by TI. Further, Buyers must fully indemnify TI and its representatives against any damages arising out of the use of TI products in such safety-critical applications.

TI products are neither designed nor intended for use in military/aerospace applications or environments unless the TI products are specifically designated by TI as military-grade or "enhanced plastic." Only products designated by TI as military-grade meet military specifications. Buyers acknowledge and agree that any such use of TI products which TI has not designated as military-grade is solely at the Buyer's risk, and that they are solely responsible for compliance with all legal and regulatory requirements in connection with such use.

TI products are neither designed nor intended for use in automotive applications or environments unless the specific TI products are designated by TI as compliant with ISO/TS 16949 requirements. Buyers acknowledge and agree that, if they use any non-designated products in automotive applications, TI will not be responsible for any failure to meet such requirements.

Following are URLs where you can obtain information on other Texas Instruments products and application solutions:

| **Products** | | **Applications** | |
|---|---|---|---|
| Audio | www.ti.com/audio | Communications and Telecom | www.ti.com/communications |
| Amplifiers | amplifier.ti.com | Computers and Peripherals | www.ti.com/computers |
| Data Converters | dataconverter.ti.com | Consumer Electronics | www.ti.com/consumer-apps |
| DLP® Products | www.dlp.com | Energy and Lighting | www.ti.com/energy |
| DSP | dsp.ti.com | Industrial | www.ti.com/industrial |
| Clocks and Timers | www.ti.com/clocks | Medical | www.ti.com/medical |
| Interface | interface.ti.com | Security | www.ti.com/security |
| Logic | logic.ti.com | Space, Avionics and Defense | www.ti.com/space-avionics-defense |
| Power Mgmt | power.ti.com | Transportation and Automotive | www.ti.com/automotive |
| Microcontrollers | microcontroller.ti.com | Video and Imaging | www.ti.com/video |
| RFID | www.ti-rfid.com | Wireless | www.ti.com/wireless-apps |
| RF/IF and ZigBee® Solutions | www.ti.com/lprf | | |
| | **TI E2E Community Home Page** | | e2e.ti.com |

Mailing Address: Texas Instruments, Post Office Box 655303, Dallas, Texas 75265
Copyright © 2011, Texas Instruments Incorporated