ADS-941
14-Bit, 1MHz Sampling A/D Converters

FEATURES
- **14-bit resolution**
- **1MHz minimum sampling rate**
- **Functionally complete**
- **Internal reference and sample/hold**
- **No missing codes**
- **Excellent performance**
- **Full Nyquist-rate sampling**
- **Small 32–pin DIP**
- **Low power, 2.8 Watts**



GENERAL DESCRIPTION

DATEL's ADS-941 is a functionally complete, 14-bit, 1MHz, sampling A/D converter. Its standard, 32-pin, triple-wide ceramic DIP contains a fast-settling sample/hold amplifier, a 14-bit subranging (two-pass) A/D converter, a precision reference, a three-state output register, and all the timing and control logic necessary to operate from a single start convert pulse.

The ADS-941 is optimized for wideband frequency-domain applications and is fully FFT tested. Total harmonic distortion (THD) and signal-to-noise ratio (including distortion) typically run at –85dB and 80dB, respectively, with full-scale inputs up to 100kHz.

The ADS-941 requires ±15V and +5V supplies and typically consumes 2.8 Watts.

INPUT/OUTPUT CONNECTIONS

PIN	FUNCTION	PIN	FUNCTION
1	+10V REF. OUT	32	START CONVERT
2	BIPOLAR	31	BIT 1 OUT ($\overline{\text{MSB}}$)
3	ANALOG INPUT	30	BIT 1 OUT (MSB)
4	SIGNAL GROUND	29	BIT 2 OUT
5	OFFSET ADJUST	28	BIT 3 OUT
6	ANALOG GROUND	27	BIT 4 OUT
7	OVERFLOW	26	BIT 5 OUT
8	CODING SELECT	25	BIT 6 OUT
9	$\overline{\text{ENABLE}}$	24	BIT 7 OUT
10	+5V SUPPLY	23	BIT 8 OUT
11	DIGITAL GROUND	22	BIT 9 OUT
12	+15V SUPPLY	21	BIT 10 OUT
13	–15V SUPPLY	20	BIT 11 OUT
14	ANALOG GROUND	19	BIT 12 OUT
15	ANALOG GROUND	18	BIT 13 OUT
16	$\overline{\text{EOC}}$	17	BIT 14 OUT (LSB)

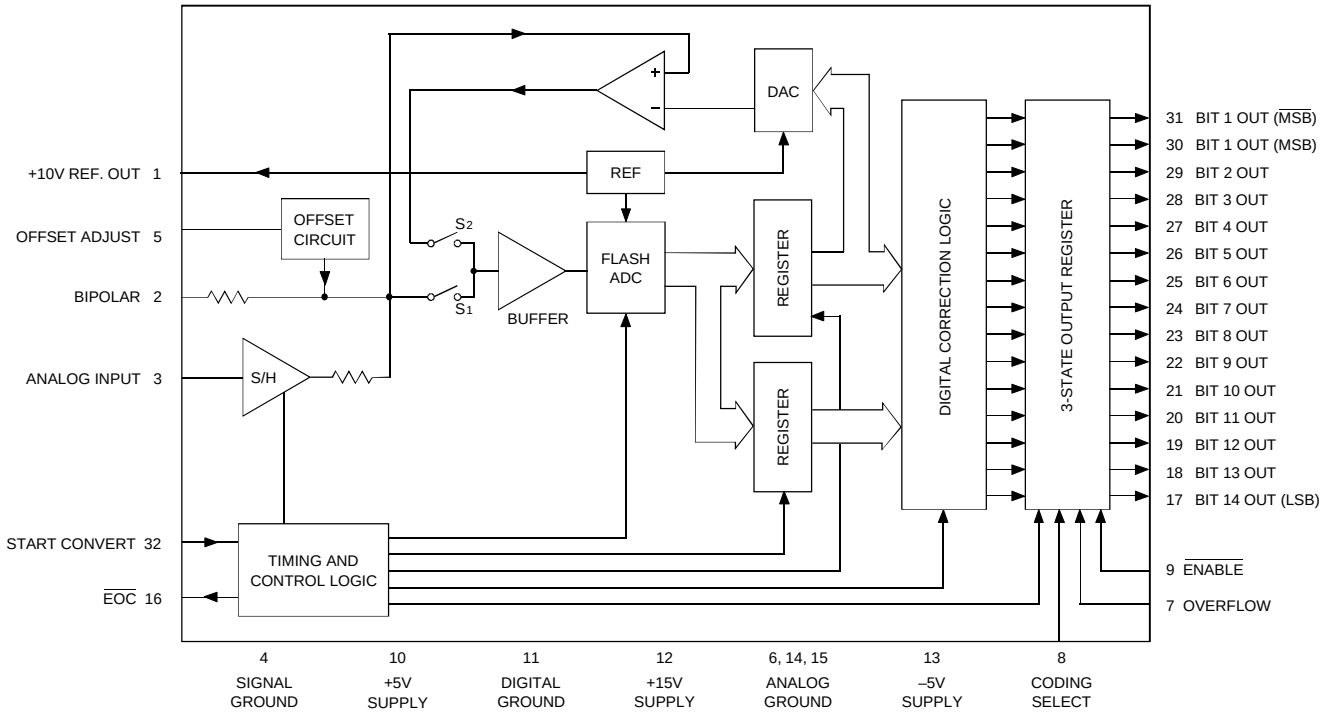

Figure 1. ADS-941 Functional Block Diagram

DATEL, Inc., 11 Cabot Boulevard, Mansfield, MA 02048-1151 (U.S.A.) • Tel: (508) 339-3000 Fax: (508) 339-6356 • For immediate assistance: (800) 233-2765

ABSOLUTE MAXIMUM RATINGS

PARAMETERS	LIMITS	UNITS
+15V Supply (Pin 12)	0 to +16	Volts
–15V Supply (Pin 13)	0 to –16	Volts
+5V Supply (Pin 10)	0 to +6.0	Volts
Digital Inputs (Pin 8,9, 32)	–0.3 to +V_{DD} +0.3	Volts
Analog Input (Pin 3)	±15	Volts
Lead Temp. (10 seconds)	300	°C

FUNCTIONAL SPECIFICATIONS

(T_A = +25°C, ±V_{CC} = ±15V, ±V_{DD} = ±5V, 1MHz sampling rate, and a minimum 7 minute warmup unless otherwise specified.)

ANALOG INPUTS	MIN.	TYP.	MAX.	UNITS
Input Voltage Range				
Unipolar	—	0 to +10	—	Volts
Bipolar	—	±5	—	Volts
Input Impedence	2.2	2.5	—	kΩ
Input Capacitance	—	7	15	pF
DIGITAL INPUTS				
Logic Levels				
Logic "1"	+2.0	—	—	Volts
Logic "0"	—	—	+0.8	Volts
Logic Loading "1"	—	—	+10	µA
Logic Loading "0"	—	—	–600	µA
PERFORMANCE				
Integral Non-Linearity				
(f_{in} = 10KHz)				
+25°C	—	±1	±2	LSB
0 to +70°C	—	±1.5	±2	LSB
–40 to +85°C	—	±2	±3	LSB
Differential Non-Linearity				
(f_{in} = 10KHz)				
+25°C	–0.75	±0.5	±0.75	LSB
0 to +70°C	–0.95	±0.75	±0.95	LSB
–40 to +85°C	–1	±0.95	+2.5	LSB
Full Scale Absolute Accuracy				
+25°C	—	±0.1	±0.122	%FSR
0 to +70°C	—	±0.12	±0.36	%FSR
–40 to +85°C	—	±0.45	±0.85	%FSR
Unipolar Zero Error				
+25°C (see Figure 3)	—	±0.05	±0.122	%FSR
0 to +70°C	—	±0.1	±0.2	%FSR
–40 to +85°C	—	±0.2	±0.3	%FSR
Bipolar Zero Error				
+25°C (see Figure 3)	—	±0.05	±0.122	%FSR
0 to +70°C	—	±0.1	±0.2	%FSR
–40 to +85°C	—	±0.2	±0.3	%FSR
Bipolar Offset Error				
+25°C (see Figure 3)	—	±0.1	±0.12	%FSR
0 to +70°C	—	±0.12	±0.3	%FSR
–40 to +85°C	—	±0.6	±0.8	%FSR
Gain Error				
+25°C (see Figure 3)	—	±0.018	±0.122	%
0 to +70°C	—	±0.12	±0.3	%
–40 to +85°C	—	±0.6	±0.8	%
No Missing Codes (f_{in} = 500kHz)				
14 Bits	0 to +70°C			
Resolution	14 Bits			

OUTPUTS	MIN.	TYP.	MAX.	UNITS
Output Coding	Staight Bin./Offset Bin./Two's Comp. Comp. Bin./Comp. Offset Bin./C2C			
Logic Level				
Logic "1"	+2.4	—	—	Volts
Logic "0"	—	—	+0.4	Volts
Logic Loading "1"	—	—	–160	µA
Logic Loading "0"	—	—	+6.4	mA
Internal Reference				
Voltage, +25°C	+9.98	+10.0	+10.02	Volts
Drift	—	±13	±30	ppm/°C
External Current	—	—	5	mA
DYNAMIC PERFORMANCE				
Slew Rate	—	±250	1	V/µs
Aperature Delay Time	—	—	10	ns
Aperature Uncertainty	—	—	±5	ps
S/H Aquisition TIme				
(to ±0.003%FS, 10V step)	—	250	350	ns
Total Harm. Distort. (–0.5dB)				
dc to 100kHz	–78	–85	—	dB
100kHz to 500kHz	–77	–80	—	dB
Signal-to-Noise Ratio				
(w/o distortion, –0.5dB				
dc to 100kHz	75	80	—	dB
100kHz to 500kHz	74	77	—	dB
Signal-to-Noise Ratio				
(and distortion, –0.5dB)				
dc to 100kHz	74	80	—	dB
100kHz to 500kHz	73	78	—	dB
Spurious Free Dyn. Range ①				
dc to 100kHz78	78	86	—	dB
100 to 500kHz	77	83	—	dB
Two-tone IMD				
Distortion (f_{in} = 100kHz,				
240kHz, fs = 2.0Mhz,				
–0.5dB)	—	–85	—	dB
Input Bandwidth (–3dB)				
Small Signal (–20dB input)	—	6	—	MHz
Large Signal (–0dB input)	—	1.75	—	MHz
Feedthrough Rejection				
(f_{in} = 500KHz)	—	87	—	dB
Overvoltage Recovery, ±12V	—	1000	2000	ns
A/D Conversion Rate	1	—	—	MHz
Noise	—	250	—	µVrms
POWER REQUIREMENTS				
Power Supply Ranges				
+15V Supply	+14.25	+15.0	+15.75	Volts
–15V Supply	–14.25	–15.0	–15.75	Volts
+5V Supply	+4.75	+5.0	+5.25	Volts
Power Supply Currents				
+15V Supply	—	+62	+85	mA
–15V Supply	—	–80	–95	mA
+5V Supply	—	+140	+160	mA
Power Dissipation	—	2.8	3.3	Watts
Power Supply Rejection	—	—	±0.02	%FSR%V
PHYSICAL/ENVIRONMENTAL				
Operating Temp. Range, Case				
ADS-941MC	0	—	+70	°C
ADS-941ME	–40	—	+85	°C
Storage Temperature Range	–65	—	+150	°C
Package Type	32-pin, metal-sealed, ceramic TDIP			
Weight	0.46 ounces (13 grams)			

Footnote:

① Same specification as In-Band Harmonics and Peak Harmonics.

TECHNICAL NOTES

1. Rated performance requires using good high-frequency circuit board layout techniques. The analog and digital grounds are not connected to each other internally. Avoid ground-related problems by connecting the digital and analog grounds to one point, the ground plane beneath the converter. Due to the inductance and resistance of the power supply return paths, return the analog and digital ground separately to the power supplies.
2. Bypass the analog and digital supplies and the +10V REF. OUT (pin 1) to ground with a 4.7µF, 25V tantalum electrolytic capacitor in parallel with a 0.1µF ceramic capacitor.
3. CODING SELECT (pin 8) is compatible with CMOS/TTL logic levels for those users desiring logic control of this function. The device has an internal pull-up resistor on this pin, allowing pin 8 to be connected to +5V or left open when a logic 1 is needed. See the Calibration Procedure for selecting an output coding.
4. To enable the three-state outputs, connect $\overline{\text{ENABLE}}$ (pin 9) to a logic "0" (low). To disable, connect pin 9 to a logic "1" (high).

CALIBRATION PROCEDURE

1. Connect the converter per Figure 3 and Table 1 for the appropriate input range. Apply a pulse of 50 nanoseconds minimum to START CONVERT (pin 32) at a rate of 200kHz. This rate is chosen to reduce flicker if LED's are used on the outputs for calibration purposes.
2. **Zero Adjustments**

   Apply a precision voltage reference source between ANALOG INPUT (pin 3) and SIGNAL GROUND (pin 4), then adjust the reference source output per Table 2.

   For unipolar operation, adjust the zero trimpot so that the output code flickers equally between 00 0000 0000 0000 and 00 0000 0000 0001 with CODING SELECT (pin 8) tied low (straight binary) or between 11 1111 1111 1111 and 11 1111 1111 1110 with pin 8 tied high (complementary binary).

   For bipolar operation, adjust the trimpot until the code flickers equally between 10 0000 0000 0000 and 10 0000 0000 0001 with pin 8 tied low (offset binary) or between 01 1111 1111 1111 and 01 1111 1111 1110 with pin 8 tied high (complementary offset binary).

   Two's complement coding requires using BIT 1 OUT (MSB) (pin 31). With pin 8 tied low, adjust the trimpot until the code flickers between 00 0000 0000 0000 and 00 0000 0000 0001.
3. **Full-Scale Adjustment**

   Set the output of the voltage reference used in step 2 to the value shown in Table 2.

   Adjust the gain trimpot until the output code flickers equally between 11 1111 1111 1110 and 11 1111 1111 1111 with pin 8 tied low for straight binary/offset binary or between 00 0000 0000 0000 and 00 0000 0000 0001 with pin 8 tied high for complementary binary/complementary offset binary.

   Two's complement coding requires using pin 31. With pin 8 tied low, adjust the gain trimpot until the output code flickers equally between 01 1111 1111 1110 and 01 1111 1111 1111.
4. To confirm proper operation of the device, vary the precision reference voltage source to obtain the output coding listed in Table 3.

Table 1. Input Connections

INPUT RANGE	INPUT PIN	TIE TOGETHER
0 +10V	Pin 3	Pins 2 and 4
±5V	Pin 3	Pins 1 and 2

Table 2. Zero and Gain Adjustments

Input Range	Zero Adjust +1/2 LSB	Gain Adjust FS – 1 1/2 LSB
0 to +10V	+305µV	+9.999085V
±5V	+305µV	+4.999085V

THERMAL REQUIREMENTS

All DATEL sampling A/D converters are fully characterized and specified over operating temperature (case) ranges of 0 to +70°C and –55 to +125°C. All room-temperature (T_A = +25°C) production testing is performed without the use of heat sinks or forced-air cooling. Thermal impedance figures for each device are listed in their respective specification tables.

These devices do not normally require heat sinks, however, standard precautionary design and layout procedures should be used to ensure devices do not overheat. The ground and power planes beneath the package, as well as all pcb signal runs to and from the device, should be as heavy as possible to help conduct heat away from the package. Electrically-insulating, thermally-conductive "pads" may be installed underneath the package. Devices should be soldered to boards rather than "socketed", and of course, minimal air flow over the surface can greatly help reduce the package temperature.

In more severe ambient conditions, the package/junction temperature of a given device can be reduced dramatically (typically 35%) by using one of DATEL's HS Series heat sinks. See Ordering Information for the assigned part number. See page 1-183 of the DATEL Data Acquisition Components Catalog for more information on the HS Series. Request DATEL Application Note AN-8, "Heat Sinks for DIP Data Converters", or contact DATEL directly, for additional information.

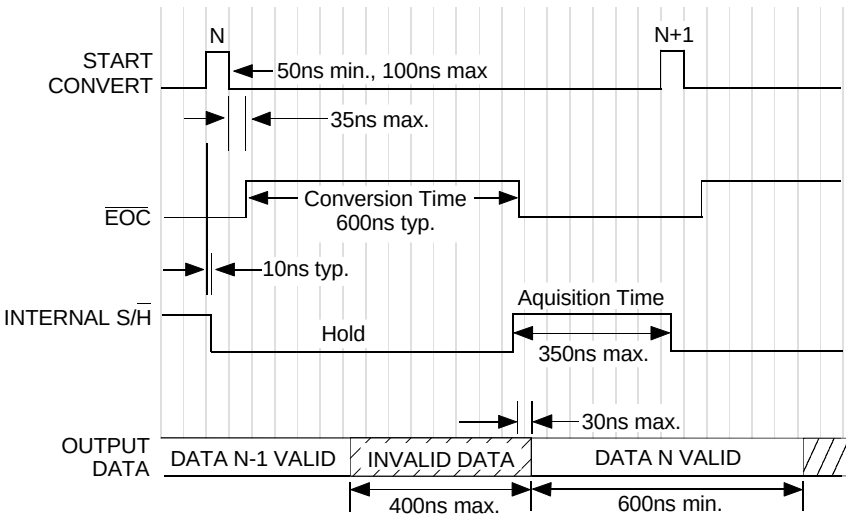

Figure 2. ADS-941 Timing Diagram

Removing System Errors

Use external potentiometers to remove system errors or to reduce the small initial errors to zero. Use a 100Ω trimpot in series with the analog input for gain adjustment. Use a fixed 50Ω resistor instead of the trimpot for operation without adjustment. Use a 20kΩ trimpot with the wiper tied to OFFSET ADJUST (pin 5) for zero/offset adjustment. Connect pin 5 to ANALOG GROUND (pin 6) for operation without zero/offset adjustment.

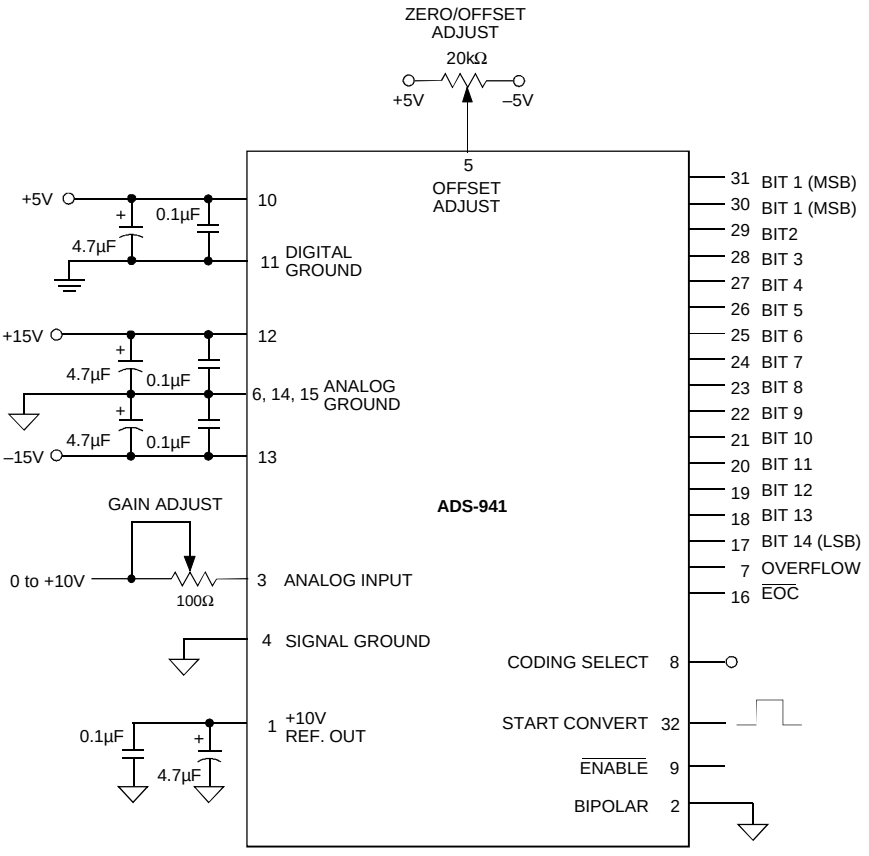

Figure 3. ADS-941 Connection Diagram

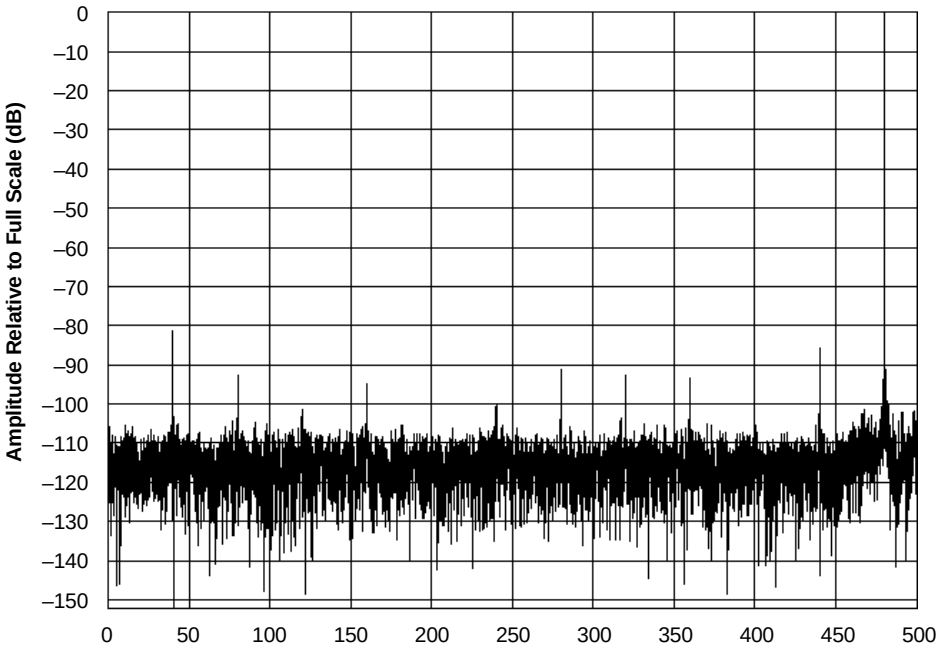

(fs = 1MHz, fin = 480kHz, Vin = –0.5dB, 16,384-point FFT)

Table 3. Output Coding

		STRAIGHT BIN.	COMP. BINARY			
UNIPOLAR SCALE	**INPUT VOLT. 0 TO +10V**	**OUTPUT CODING MSB LSB**	**MSB LSB**	**MSB LSB**	**INPUT VOLT. ±5V**	**BIPOLAR SCALE**
+FS – 1 LSB	+9.999390	11 1111 1111 1111	00 0000 0000 0000	01 1111 1111 1111	+4.999390	+FS – 1LSB
+7/8 FS	+8.750000	11 1000 0000 0000	00 0111 1111 1111	01 1000 0000 0000	+3.750000	+3/4FS
+3/4 FS	+7.500000	11 0000 0000 0000	00 1111 1111 1111	01 0000 0000 0000	+2.500000	+1/2FS
+1/2 FS	+5.000000	10 0000 0000 0000	01 1111 1111 1111	00 0000 0000 0000	0.000000	0
+1/4 FS	+2.500000	01 0000 0000 0000	10 1111 1111 1111	11 0000 0000 0000	–2.500000	–1/2FS
+1/8 FS	+1.250000	00 1000 0000 0000	11 0111 1111 1111	10 1000 0000 0000	–3.750000	–3/4FS
+1 LSB	+0.000610	00 0000 0000 0001	11 1111 1111 1110	10 0000 0000 0001	–4.999390	–FS+1LSB
0	0.000000	00 0000 0000 0000	11 1111 1111 1111	10 0000 0000 0000	–5.000000	–FS
		OFF. BINARY	**COMP. OFF. BIN.**	**TWO'S COMP.**		

MECHANICAL DIMENSIONS INCHES (mm)

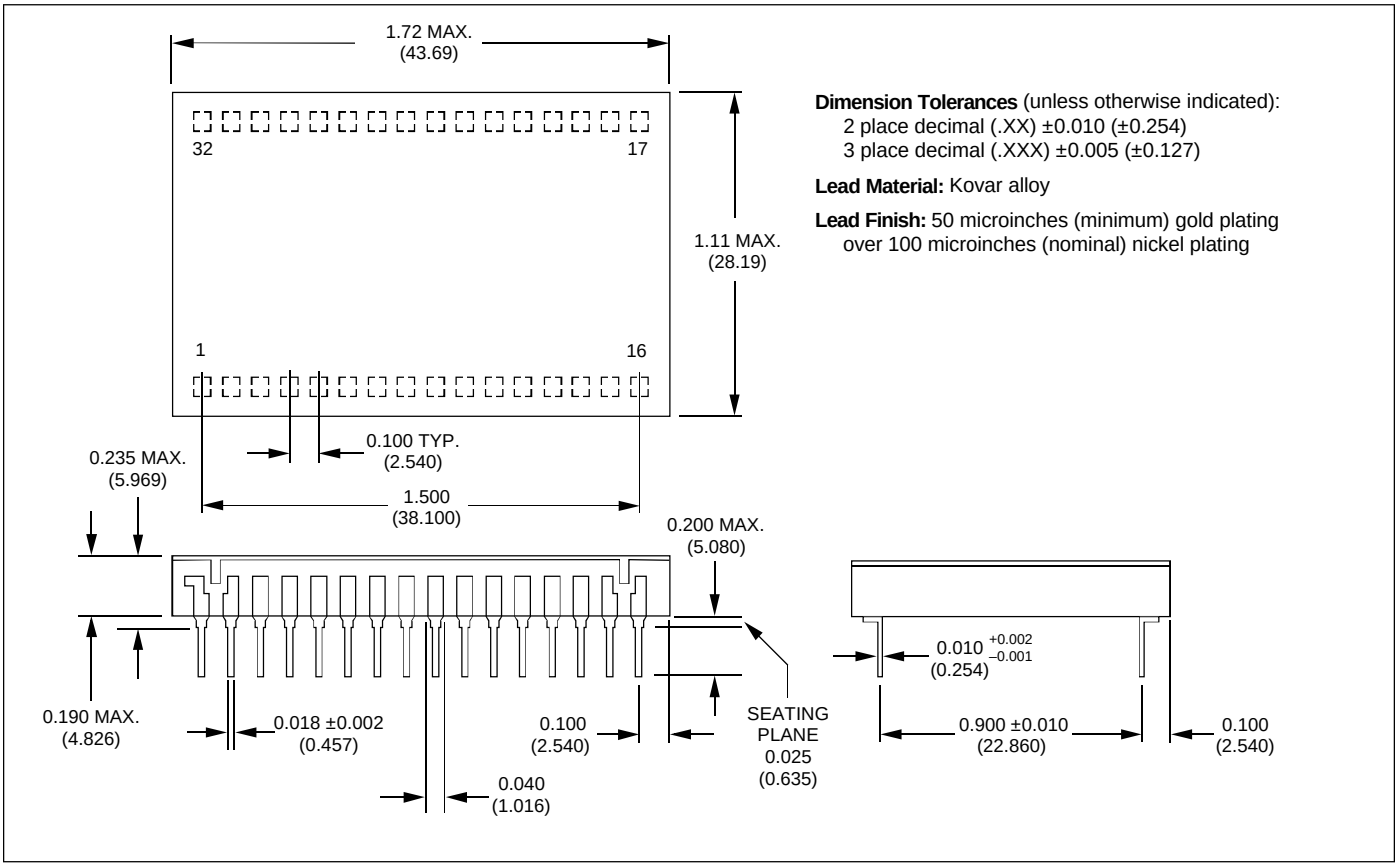

Dimension Tolerances (unless otherwise indicated):
2 place decimal (.XX) ±0.010 (±0.254)
3 place decimal (.XXX) ±0.005 (±0.127)

Lead Material: Kovar alloy

Lead Finish: 50 microinches (minimum) gold plating over 100 microinches (nominal) nickel plating

ORDERING INFORMATION

MODEL NUMBER	OPERATING TEMP. RANGE
ADS-941MC	0 to +70°C
ADS-941ME	–40 to +85°C

ACCESSORIES	
ADS-EVAL4	Evaluation Board (without ADS-942)
HS-32	Heat Sink for all ADS-942 models

Receptacles for PC mounting can be ordered through AMP Inc., Part # 3-331272-8 (Component Lead Socket), 32 required.

INNOVATION and EXCELLENCE

ISO 9001 REGISTERED

DATEL, Inc. 11 Cabot Boulevard, Mansfield, MA 02048-1151
Tel: (508) 339-3000 (800) 233-2765 Fax: (508) 339-6356
Internet: www.datel.com E-mail:sales@datel.com
Data Sheet Fax Back: (508) 261-2857

DATEL (UK) LTD. Tadley, England Tel: (01256)-880444
DATEL S.A.R.L. Montigny Le Bretonneux, France Tel: 1-34-60-01-01
DATEL GmbH München, Germany Tel: 89-544334-0
DATEL KK Tokyo, Japan Tel: 3-3779-1031, Osaka Tel: 6-354-2025

DATEL makes no representation that the use of its products in the circuits described herein, or the use of other technical information contained herein, will not infringe upon existing or future patent rights. The descriptions contained herein do not imply the granting of licenses to make, use, or sell equipment constructed in accordance therewith. Specifications are subject to change without notice. The DATEL logo is a registered DATEL, Inc. trademark.