High Power, 88 W Peak, Silicon SPDT, Reflective Switch, 0.7 GHz to 4.0 GHz

Data Sheet **ADRF5160**

FEATURES

- Reflective, 50 Ω design
- Low insertion loss: 0.7 dB typical to 2.0 GHz
- High power handling at T_{CASE} = 105°C
  - Long-term (>10 years) average
    - CW power: 43 dBm
    - Peak power: 49 dBm
    - LTE average power (8 dB PAR): 41 dBm
  - Single event (<10 sec) average
    - LTE average power (8 dB PAR): 44 dBm
- High linearity
  - P0.1dB: 47 dBm typical
  - IP3: 70 dBm typical
- ESD ratings
  - HBM: 4 kV, Class 3A
  - CDM: 1.25 kV
- Single positive supply: 5 V
- Positive control, CMOS/TTL compatible
- 32-lead, 5 mm × 5 mm LFCSP package

APPLICATIONS

- Wireless infrastructure
- Military and high reliability applications
- Test equipment
- Pin diode replacement

FUNCTIONAL BLOCK DIAGRAM

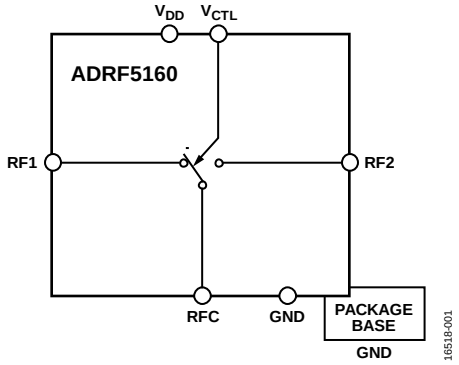

Figure 1.

GENERAL DESCRIPTION

The ADRF5160 is a silicon-based, high power, 0.7 GHz to 4.0 GHz, silicon, single-pole, double-throw (SPDT) reflective switch in a leadless, surface-mount package. The switch is ideal for high power and cellular infrastructure applications, such as long-term evolution (LTE) base stations. The ADRF5160 has high power handling of 41 dBm (8 dB PAR LTE, long-term (>10 years) average typical), a low insertion loss of 0.7 dB typical to 2.0 GHz, an input third-order intercept (IP3) of 70 dBm (typical), and a 0.1 dB compression point (P0.1dB) of 47 dBm. On-chip circuitry operates at a single positive supply voltage of 5 V at a typical supply current of 1.1 mA, making the ADRF5160 an ideal alternative to pin diode-based switches.

The ADRF5160 comes in an RoHS compliant, compact, 32-lead, 5 mm × 5 mm LFCSP.

Rev. 0 Document Feedback
Information furnished by Analog Devices is believed to be accurate and reliable. However, no responsibility is assumed by Analog Devices for its use, nor for any infringements of patents or other rights of third parties that may result from its use. Specifications subject to change without notice. No license is granted by implication or otherwise under any patent or patent rights of Analog Devices. Trademarks and registered trademarks are the property of their respective owners.

One Technology Way, P.O. Box 9106, Norwood, MA 02062-9106, U.S.A.
Tel: 781.329.4700
©2018 Analog Devices, Inc. All rights reserved.
Technical Support www.analog.com

TABLE OF CONTENTS

Features 1
Applications 1
Functional Block Diagram 1
General Description 1
Revision History 2
Specifications 3
Absolute Maximum Ratings 4
Thermal Resistance 4
ESD Caution 4
Pin Configuration and Function Descriptions 5
Interface Schematics 5
Typical Performance Characteristics 6
Theory of Operation 8
Applications Information 9
Evaluation Board 9
Typical Application Circuit 10
Outline Dimensions 12
Ordering Guide 12

REVISION HISTORY

5/2018—Revision 0: Initial Version

SPECIFICATIONS

V_{DD} = 5 V, V_{CTL} = 0 V/V_{DD}, T_A = 25°C, and the device is a 50 Ω system, unless otherwise noted.

Table 1.

Parameter	Test Conditions/Comments	Min	Typ	Max	Unit
FREQUENCY RANGE		0.7		4.0	GHz
INSERTION LOSS	0.7 GHz to 2.0 GHz		0.7		dB
	2.0 GHz to 3.5 GHz		0.8	1.0[1]	dB
	3.5 GHz to 4.0 GHz		0.9		dB
ISOLATION					
RFC to RF1 and RF2 (Worst Case)	0.7 GHz to 2.0 GHz		53		dB
	2.0 GHz to 4.0 GHz		45		dB
RF1 to RF2	0.7 GHz to 2.0 GHz		51		dB
	2.0 GHz to 4.0 GHz		35		dB
RETURN LOSS					
RFC	0.7 GHz to 2.0 GHz		20		dB
	2.0 GHz to 4.0 GHz		19		dB
RF1 and RF2 (On State)	0.7 GHz to 2.0 GHz		19		dB
	2.0 GHz to 4.0 GHz		18		dB
SWITCHING CHARACTERISTICS					
Rise and Fall Time (t_{RISE}, t_{FALL})	10%/90% radio frequency output (RF_{OUT})		0.27		µs
On and Off Time (t_{ON}, t_{OFF})	50% V_{CTL} to 10%/90% RF_{OUT}		1.2		µs
INPUT LINEARITY					
0.1 dB Compression (P0.1dB)			47		dBm
Third-Order Intercept (IP3)	Two-tone input power = 30 dBm per tone at 1 MHz tone spacing				
	0.7 GHz to 2.0 GHz		72		dBm
	2.0 GHz to 4.0 GHz		70		dBm
SUPPLY CURRENT			1.1		mA
DIGITAL CONTROL INPUT	V_{DD} = 4.5 V to 5.4 V, T_{CASE} = −40°C to +105°C				
Low Voltage		0		0.8	V
High Voltage		1.3		5	V
Low and High Current			<1		µA
RECOMMENDED OPERATING CONDITIONS					
Supply Voltage Range (V_{DD})		4.5		5.4	V
Control Voltage Range (V_{CTL})		0		V_{DD}	V
RF Input Power					
Case Temperature (T_{CASE}) = 105°C[2]	Continuous wave (CW)			43	dBm
	8 dB peak average ratio (PAR) LTE, long-term (>10 years) average			41	dBm
	8 dB PAR LTE, single event (<10 sec) average			44	dBm
T_{CASE} = 85°C	CW			45	dBm
	8 dB PAR LTE, long-term (>10 years) average			41	dBm
	8 dB PAR LTE, single event (<10 sec) average			44	dBm
T_{CASE} = 25°C	CW			47.5	dBm
	8 dB PAR LTE, long-term (>10 years) average			41	dBm
	8 dB PAR LTE, single event (<10 sec) average			44	dBm
T_{CASE} = −40°C	CW			49	dBm
	8 dB PAR LTE, long-term (>10 years) average			41	dBm
	8 dB PAR LTE, single event (<10 sec) average			44	dBm
T_{CASE} Range		−40		+105	°C

[1] Guaranteed by design for device to device and over operating temperature variation.
[2] Peak power is 49 dBm, which corresponds to a PAR of 8 dB at LTE long-term.

ABSOLUTE MAXIMUM RATINGS

Table 2.

Parameter	Rating
Supply Voltage Range (V_{DD})	−0.3 V to +5.4 V
Control Voltage Range (V_{CTL})	−0.3 V to V_{DD} + 0.3 V
RF Input Power[1]	49.7 dBm
Channel Temperature	135°C
Maximum Peak Reflow Temperature (Moisture Sensitivity Level 3 (MSL3))[2]	260°C
Storage Temperature Range	−65°C to +150°C
Electrostatic Discharge (ESD) Sensitivity	
Human Body Model (HBM)	4 kV (Class 3A)
Charged Device Model (CDM)	1.25 kV

[1] For the recommended operating conditions, see Table 1.
[2] See the Ordering Guide for additional information.

Stresses at or above those listed under Absolute Maximum Ratings may cause permanent damage to the product. This is a stress rating only; functional operation of the product at these or any other conditions above those indicated in the operational section of this specification is not implied. Operation beyond the maximum operating conditions for extended periods may affect product reliability.

THERMAL RESISTANCE

Thermal performance is directly linked to printed circuit board (PCB) design and operating environment. Careful attention to PCB thermal design is required.

Table 3. Thermal Resistance

Package Type	θ_{JC}	Unit
HCP-32-1	8.4	°C/W

ESD CAUTION



ESD (electrostatic discharge) sensitive device. Charged devices and circuit boards can discharge without detection. Although this product features patented or proprietary protection circuitry, damage may occur on devices subjected to high energy ESD. Therefore, proper ESD precautions should be taken to avoid performance degradation or loss of functionality.

PIN CONFIGURATION AND FUNCTION DESCRIPTIONS

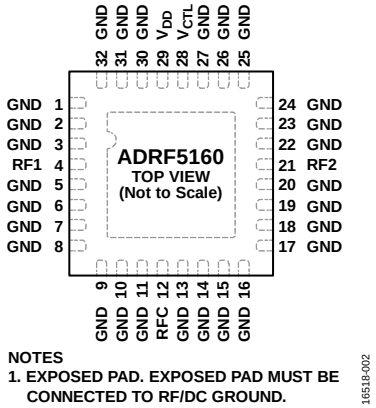

Figure 2. Pin Configuration

Table 4. Pin Function Descriptions

Pin No.	Mnemonic	Description
1 to 3, 5 to 11, 13 to 20, 22 to 27, 30 to 32	GND	Ground. The package bottom has an exposed metal pad that must connect to the PCB RF/dc ground.
4	RF1	RF Port 1. This pin is dc-coupled and matched to 50 Ω. A dc blocking capacitor is required on this pin. See Figure 3 for the interface schematic.
12	RFC	RF Common Port. This pin is dc-coupled and matched to 50 Ω. A dc blocking capacitor is required on this pin. See Figure 3 for the interface schematic.
21	RF2	RF Port 2. This pin is dc-coupled and matched to 50 Ω. A dc blocking capacitor is required on this pin. See Figure 3 for the interface schematic.
28	V_{CTL}	Control Input Pin. See Figure 4 for the V_{CTL} interface schematic. Refer to Table 5 for the signal path and the recommended input control voltage range shown in Table 1.
29	V_{DD}	Supply Voltage Pin.
	EPAD	Exposed Pad. Exposed pad must be connected to RF/dc ground.

INTERFACE SCHEMATICS

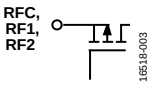

Figure 3. RFC, RF1, and RF2 Interface Schematic

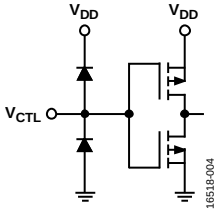

Figure 4. Control Input (V_{CTL}) Interface Schematic

TYPICAL PERFORMANCE CHARACTERISTICS

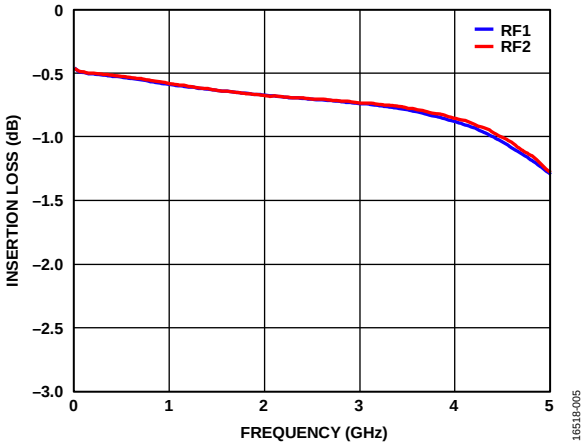

Figure 5. Insertion Loss for RF1 and RF2 vs. Frequency at V_{DD} = 5 V

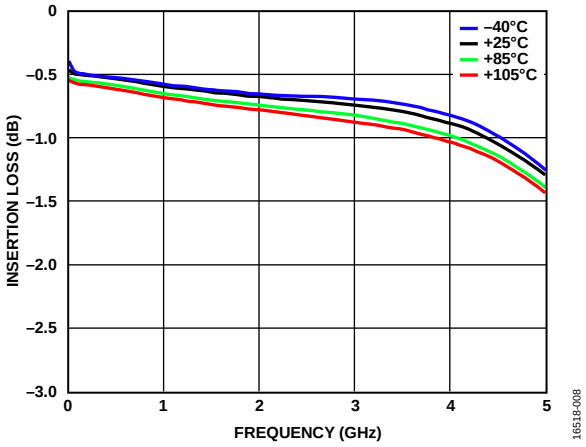

Figure 8. Insertion Loss vs. Frequency for Various Temperatures at V_{DD} = 5 V

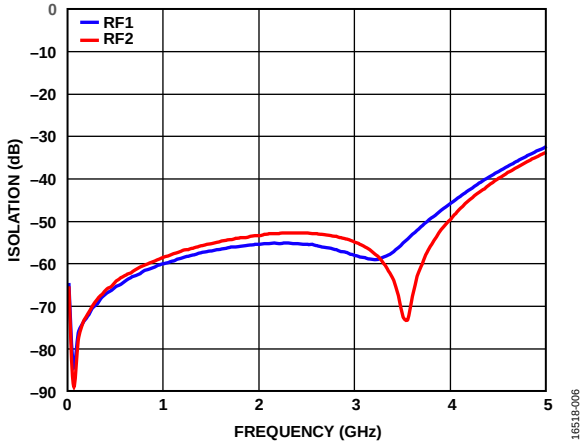

Figure 6. Isolation Between RFC and RF1 and RF2 vs. Frequency at V_{DD} = 5 V

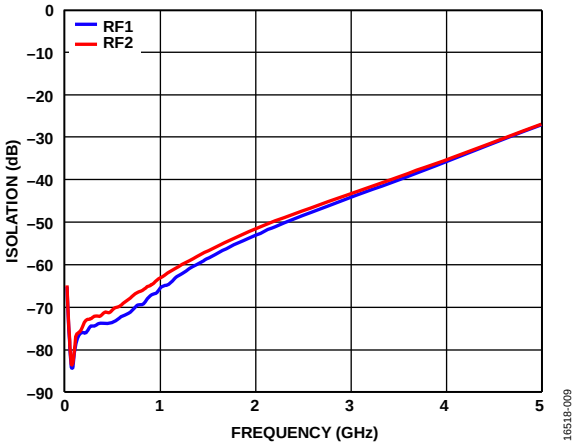

Figure 9. Isolation Between RF1 and RF2 vs. Frequency at V_{DD} = 5 V

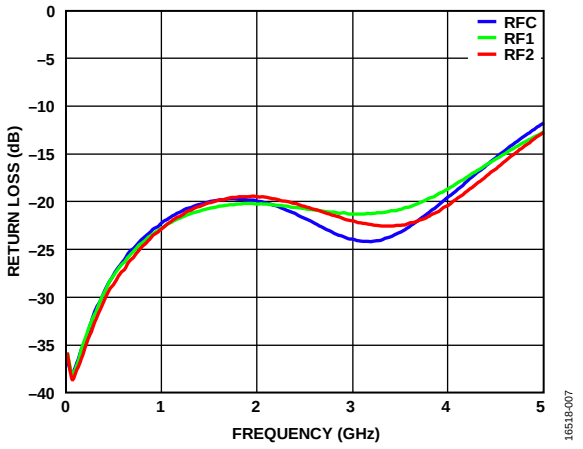

Figure 7. Return Loss vs. Frequency at V_{DD} = 5 V

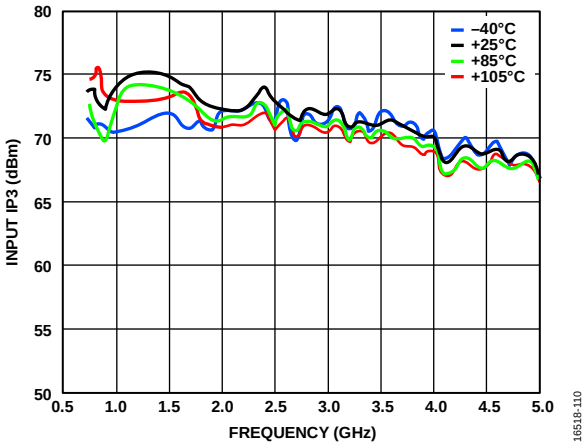

Figure 10. Input Third-Order Intercept (IP3) vs. Frequency for Various Temperatures, V_{DD} = 5 V

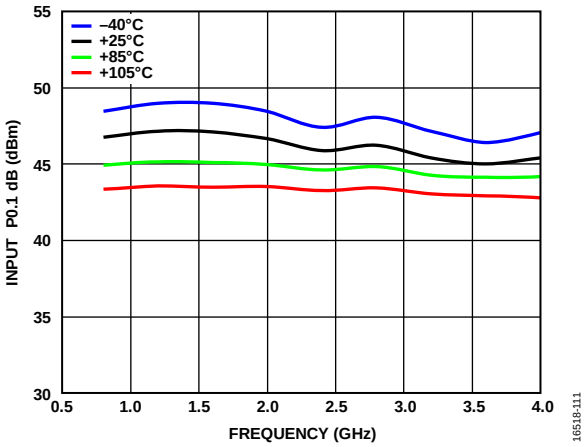

Figure 12. Input 0.1dB Compression (P0.1dB) vs. Frequency for Various Temperatures, V_{DD} = 5 V

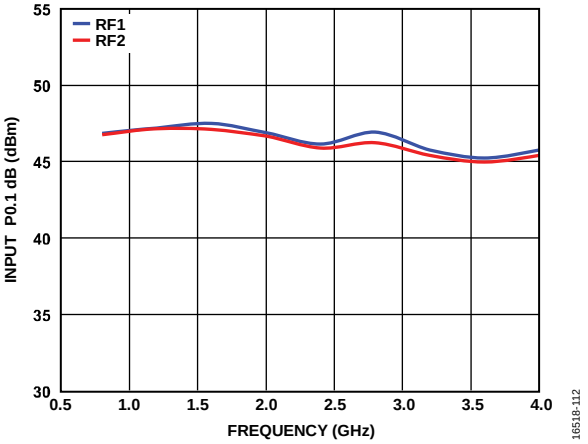

Figure 11. Input 0.1dB Power Compression (P0.1dB) vs. Frequency, V_{DD} = 5 V

THEORY OF OPERATION

The ADRF5160 requires a single-supply voltage applied to the V_{DD} pin. Bypassing capacitors are recommended on the supply line to minimize RF coupling.

The ADRF5160 is controlled via a digital control voltage applied to the V_{CTL} pin. A bypassing capacitor is recommended on this digital signal line to improve the RF signal isolation.

The ADRF5160 is internally matched to 50 Ω at the RF input port (RFC) and the RF output ports (RF1 and RF2). Therefore, no external matching components are required. The RFx pins are dc-coupled, and dc blocking capacitors are required on the RFx lines. The design is bidirectional, meaning that the input and outputs are interchangeable.

The ideal power-up sequence is as follows:

1. Connect GND.
2. Power up V_{DD}.
3. Power up the digital control input. Power the digital control input before the V_{DD} supply to avoid inadvertently forward biasing and damaging the ESD protection structures.
4. Power up the RF input.

Depending on the logic level applied to the V_{CTL} pin, one RF output port (for example, RF1) is set to on mode, by which an insertion loss path is provided from the input to the output. While the other RF output port (for example, RF2) is set to off mode, by which the output is isolated from the input.

Table 5. Switch Operation Mode

	Signal Path	
Digital Control Input (V_{CTL})	**RF1 to RFC**	**RF2 to RFC**
Low	Isolation (off)	Insertion loss (on)
High	Insertion loss (on)	Isolation (off)

APPLICATIONS INFORMATION

EVALUATION BOARD

The ADRF5160-EVALZ can withstand high power levels and temperatures at which the device operates.

The ADRF5160-EVALZ evaluation board is constructed with eight metal layers and dielectrics between each layer, as shown in Figure 13. Each metal layer has a 1 oz (1.3 mil) copper thickness, and the external layers are plated to 2 oz.

The top dielectric material is 10 mil Rogers RO4350, which exhibits a low thermal coefficient, offering control over thermal rise of the board. The dielectrics between other metal layers are FR4. The overall board thickness is 62 mil.

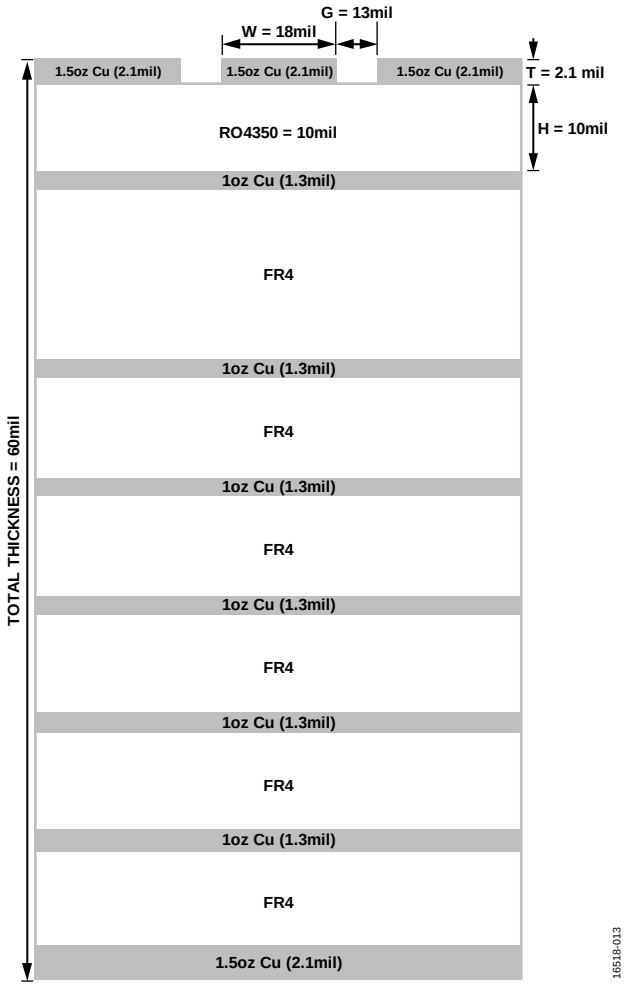

Figure 13. ADRF5160-EVALZ Evaluation Board Cross Sectional View

The top copper layer has all RF and dc traces. The other seven layers provide sufficient ground and help handle the thermal rise on the ADRF5160-EVALZ. In addition, via holes are provided around transmission lines and under the exposed pad of package, as shown in Figure 15, for proper thermal grounding. RF transmission lines on the board are of a coplanar wave guide design with a width of 18 mils and ground spacing of 13 mils.

To ensure maximum heat dissipation and to reduce thermal rise on the board, some application considerations are essential. The evaluation board must be attached to a copper support plate at the bottom of the board. The ADRF5160-EVALZ comes with this support plate attachment. Attach this evaluation board with its support plate to a heat sink using thermal grease during all high power operations. Figure 14 shows the board temperature vs. the RF power input tested with the preceding conditions and precautions (the evaluation board and support plate are attached to a heat sink). The temperature rise is less than 8°C up to 48 dBm of RF power input, which provides the required thermal dissipation when operating at high power levels.

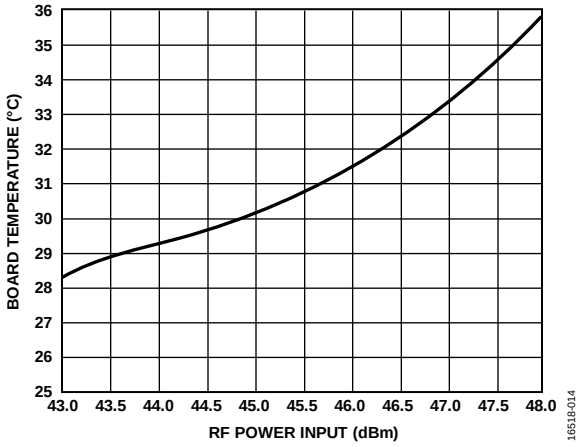

Figure 14. ADRF5160-EVALZ Evaluation Board Temperature Rise (Oven Temperature Set to 25°C)

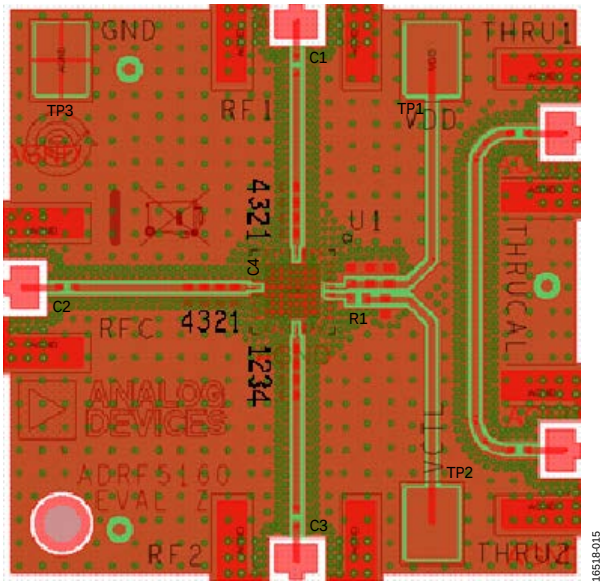

Figure 15. ADRF5160-EVALZ Evaluation Board Layout

TYPICAL APPLICATION CIRCUIT

Generate the evaluation PCB used in the typical application circuit shown in Figure 17 with proper RF circuit design techniques. Signal lines at the RF port must have a 50 Ω impedance, and the package ground leads and backside ground slug must connect directly to the ground plane. The evaluation board shown in Figure 16 is available from Analog Devices, Inc., upon request.

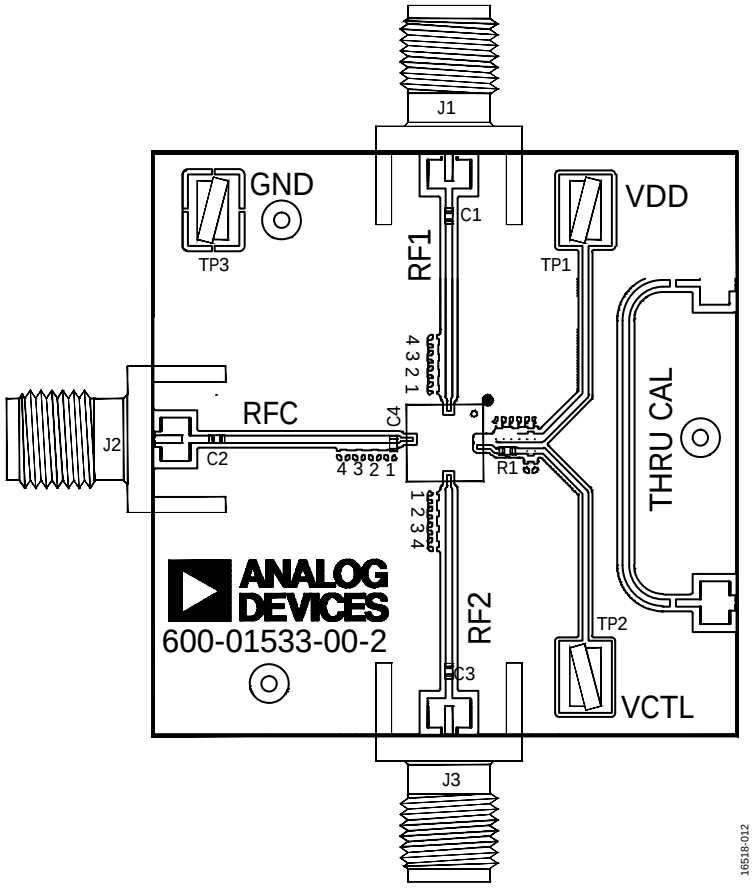

Figure 16. ADRF5160-EVALZ Evaluation Board Component Placement

Table 6. Bill of Materials for the ADRF5160-EVALZ Evaluation Board

Reference Designator	Description
C1 to C3	24 pF, 200 V ultralow, effective series resistance (ESR) capacitors, 0402 package
C4	0.3 pF, 200 V ultralow ESR capacitor, 0402 package
TP1, TP2, TP3	Test point connectors
R1	0 Ω resistor, 0402 package
J1, J2, J3	PCB mount, SubMiniature Version A (SMA) connectors
U1	ADRF5160 SPDT switch
PCB[1]	ADRF5160-EVALZ[2] evaluation PCB

[1] The circuit board material is Roger 4350 or Arlon 25FR.
[2] Reference to this evaluation board number when ordering the complete evaluation board.

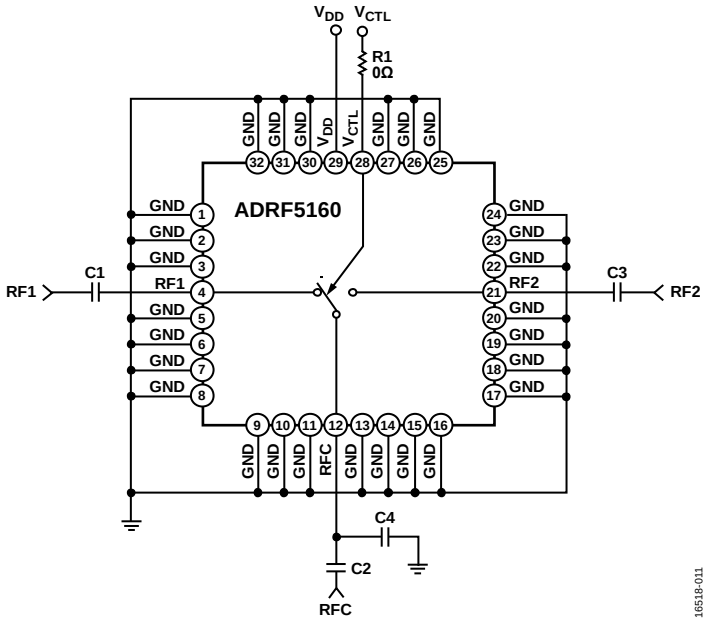

Figure 17. Typical Application Circuit

OUTLINE DIMENSIONS

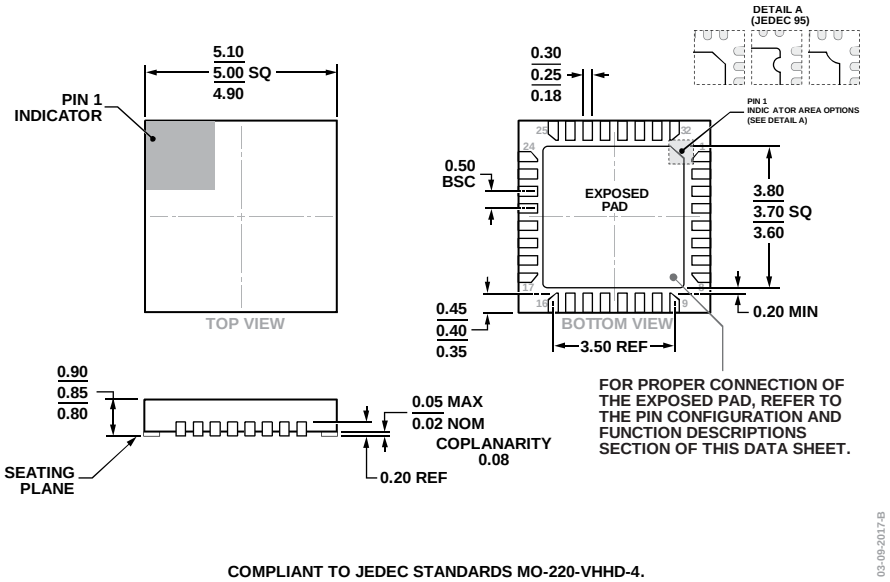

Figure 18. 32-Lead Lead Frame Chip Scale Package [LFCSP]
5 mm × 5 mm Body and 0.85 mm Package Height
(HCP-32-1)
Dimensions shown in millimeters

ORDERING GUIDE

Model[1]	Temperature Range	MSL Rating[2]	Package Description	Package Option
ADRF5160BCPZ	−40°C to +105°C	MSL3	32-lead Lead Frame Chip Scale Package [LFCSP]	HCP-32-1
ADRF5160BCPZ-R7	−40°C to +105°C	MSL3	32-lead Lead Frame Chip Scale Package [LFCSP]	HCP-32-1
ADRF5160-EVALZ			Evaluation Board	

[1] Z = RoHS Compliant Part.
[2] See the Absolute Maximum Ratings section for additional information.

©2018 Analog Devices, Inc. All rights reserved. Trademarks and registered trademarks are the property of their respective owners.
D16518-0-5/18(0)