Ultracompact, Precision 10.0 V/5.0 V/2.5 V/3.0 V Voltage References

Data Sheet

ADR01/ADR02/ADR03/ADR06

FEATURES

- Ultracompact SC70 and TSOT packages
- Low temperature coefficient
  - 8-lead SOIC: 3 ppm/°C
  - 5-lead SC70: 9 ppm/°C
  - 5-lead TSOT: 9 ppm/°C
- Initial accuracy ±0.1%
- No external capacitor required
- Low noise 10 µV p-p (0.1 Hz to 10.0 Hz)
- Wide operating range
  - ADR01: 12.0 V to 36.0 V
  - ADR02: 7.0 V to 36.0 V
  - ADR03: 4.5 V to 36.0 V
  - ADR06: 5.0 V to 36.0 V
- High output current 10 mA
- Wide temperature range: −40°C to +125°C
- ADR01/ADR02/ADR03 pin compatible to industry-standard REF01/REF02/REF03
- ADR01, ADR02, ADR03 and ADR06 SOIC qualified for automotive applications

APPLICATIONS

- Precision data acquisition systems
- High resolution converters
- Industrial process control systems
- Precision instruments
- Auto battery monitoring
- PCMCIA cards

PIN CONFIGURATIONS

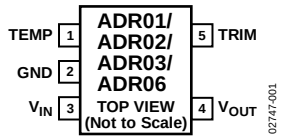

Figure 1. 5-Lead, SC70/TSOT Surface-Mount Packages

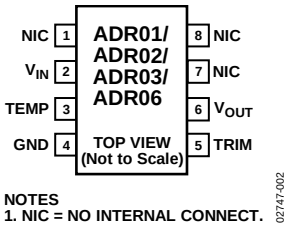

Figure 2. 8-Lead, SOIC Surface-Mount Package

GENERAL DESCRIPTION

The ADR01, ADR02, ADR03, and ADR06 are precision 10.0 V, 5.0 V, 2.5 V, and 3.0 V band gap voltage references featuring high accuracy, high stability, and low power consumption. The parts are housed in tiny, 5-lead SC70 and TSOT packages, as well as in 8-lead SOIC versions. The SOIC versions of the ADR01, ADR02, and ADR03 are drop-in replacements[1] to the industry-standard REF01, REF02, and REF03. The small footprint and wide operating range make the ADR0x references ideally suited for general-purpose and space-constrained applications.

With an external buffer and a simple resistor network, the TEMP terminal can be used for temperature sensing and approximation. A TRIM terminal is provided on the devices for fine adjustment of the output voltage.

The ADR01, ADR02, ADR03, and ADR06 are compact, low drift voltage references that provide an extremely stable output voltage from a wide supply voltage range. They are available in 5-lead SC70 and TSOT packages, and 8-lead SOIC packages with A, B, and C grade selections. All parts are specified over the extended industrial (−40°C to +125°C) temperature range. The ADR01, ADR02, ADR03, and ADR06 A grade in 8-lead SOIC are qualified for automotive applications.

Table 1. Selection Guide

Part Number	Output Voltage
ADR01	10.0 V
ADR02	5.0 V
ADR03	2.5 V
ADR06	3.0 V

[1] ADR01, ADR02, and ADR03 are component-level compatible with REF01, REF02, and REF03, respectively. No guarantees for system-level compatibility are implied. SOIC versions of ADR01/ADR02/ADR03 are pin-to-pin compatible with 8-lead SOIC versions of REF01/REF02/REF03, respectively, with the additional temperature monitoring function.

Rev. R

Information furnished by Analog Devices is believed to be accurate and reliable. However, no responsibility is assumed by Analog Devices for its use, nor for any infringements of patents or other rights of third parties that may result from its use. Specifications subject to change without notice. No license is granted by implication or otherwise under any patent or patent rights of Analog Devices. Trademarks and registered trademarks are the property of their respective owners.

One Technology Way, P.O. Box 9106, Norwood, MA 02062-9106, U.S.A.
Tel: 781.329.4700 **www.analog.com**
Fax: 781.461.3113 **©2002–2012 Analog Devices, Inc. All rights reserved.**

TABLE OF CONTENTS

Features 1
Applications 1
Pin Configurations 1
General Description 1
Revision History 2
Specifications 4
ADR01 Electrical Characteristics 4
ADR02 Electrical Characteristics 5
ADR03 Electrical Characteristics 6
ADR06 Electrical Characteristics 7
Absolute Maximum Ratings 8
Thermal Resistance 8
ESD Caution 8
Terminology 9
Typical Performance Characteristics 10
Applications Information 15
Overview 15
Applying the ADR01/ADR02/ADR03/ADR06 15
Low Cost Current Source 16
Precision Current Source with Adjustable Output 16
Programmable 4 mA to 20 mA Current Transmitter 17
Precision Boosted Output Regulator 17
Outline Dimensions 18
Ordering Guides 19
Automotive Products 20

REVISION HISTORY

1/12—Rev. Q to Rev. R

Changes to Table 2 4
Changes to ADR01 Ordering Guide 190

11/11—Rev. P to Rev. Q

Changes to General Description Section 1
Changes to Table 2 4
Changes to Table 3 5
Changes to Table 4 6
Changes to Table 5 7

10/11 Rev. O to Rev. P

Changes to Features Section, Applications Section, and General Description Section 1
Changes to ADR01 Electrical Characteristics Section and Table 2 4
Changes to ADR02 Electrical Characteristics Section and Table 3 5
Changes to ADR03 Electrical Characteristics Section and Table 4 6
Changes to ADR06 Electrical Characteristics Section and Table 5 7
Changes to Ordering Guides 19
Changes to Automotive Products Section 20

10/10—Rev. N to Rev. O

Deleted Negative Reference Section and Figure 38 16
Changes to ADR02 Ordering Guide 19

7/10—Rev. M to Rev. N

Changes to Figure 2 1
Changes to ADR01 Ordering Guide 19
Added Automotive Products Section 20

4/10—Rev. L to Rev. M

Changes to Features Section and General Description Section ..1
Changes to Figure 41 17
Changes to Ordering Guides Section 19

12/08—Rev. K to Rev. L

Changes to Maximum Input Voltage ..... Universal
Removed Die Version ..... Universal
Changes to Table 2 3
Changes to Table 3 4
Changes to Table 4 5
Changes to Table 5 6
Deleted Table 6 and Figure 3 7
Changes to Terminology Section 8
Added Input and Output Capacitors Section 15

2/08—Rev. J to Rev. K

Changes to Terminology Section 9
Changes to Ordering Guide 19

3/07—Rev. I to Rev. J

Renamed Parameters and Definitions Section 9
Changes to Temperature Monitoring Section 15
Changes to Ordering Guide 19

7/05—Rev. H to Rev. I

Changes to Table 5 7
Updated Outline Dimensions 19
Changes to Ordering Guide 19

12/04—Rev. G to Rev. H

Changes to ADR06 Ordering Guide 20

9/04—Rev. F to Rev. G

Changes to Table 2 4
Changes to Table 3 5
Changes to Table 4 6
Changes to Table 5 7
Changes to Ordering Guide 19

7/04—Rev. E to Rev. F

Changes to ADR02 Electrical Characteristics, Table 2 4
Changes to Ordering Guide 19

2/04—Rev. D to Rev. E

Added C grade ....Universal
Changes to Outline Dimensions 19
Updated Ordering Guide 20

8/03—Rev. C to Rev D

Added ADR06 ....Universal
Change to Figure 27 13

6/03—Rev. B to Rev C

Changes to Features Section 1
Changes to General Description Section 1
Changes to Figure 2 1
Changes to Specifications Section 2
Addition of Dice Electrical Characteristics and Layout 6
Changes to Absolute Maximum Ratings Section 7
Updated SOIC (R-8) Outline Dimensions 19
Changes to Ordering Guide 20

2/03—Rev. A to Rev. B

Added ADR03 ....Universal
Added TSOT-5 (UJ) Package ....Universal
Updated Outline Dimensions 18

12/02—Rev. 0 to Rev. A

Changes to Features Section 1
Changes to General Description 1
Table I Deleted 1
Changes to ADR01 Specifications 2
Changes to ADR02 Specifications 3
Changes to Absolute Maximum Ratings Section 4
Changes to Ordering Guide 4
Updated Outline Dimensions 12

SPECIFICATIONS

ADR01 ELECTRICAL CHARACTERISTICS

V_{IN} = 12.0 V to 36.0 V, V_{IN} = 12.0 V to 24.0 V for ADR01WARZ, T_A = 25°C, unless otherwise noted.

Table 2.

Parameter	Symbol	Conditions	Min	Typ	Max	Unit
OUTPUT VOLTAGE	V_O	A and C grades	9.990	10.000	10.010	V
INITIAL ACCURACY	V_{OERR}	A and C grades			10	mV
					0.1	%
OUTPUT VOLTAGE	V_O	B grade	9.995	10.000	10.005	V
INITIAL ACCURACY	V_{OERR}	B grade			5	mV
					0.05	%
OUTPUT VOLTAGE	V_O	ADR01WARZ	9.986	10.000	10.014	V
INITIAL ACCURACY	V_{OERR}	ADR01WARZ			14	mV
					0.14	%
		A grade, 8-lead SOIC, −40°C < T_A < +125°C		3	10	ppm/°C
		A grade, 5-lead TSOT, −40°C < T_A < +125°C			25	ppm/°C
		A grade, 5-lead SC70, −40°C < T_A < +125°C			25	ppm/°C
		B grade, 8-lead SOIC, −40°C < T_A < +125°C		1	3	ppm/°C
		B grade, 5-lead TSOT, −40°C < T_A < +125°C			9	ppm/°C
		B grade, 5-lead SC70, −40°C < T_A < +125°C			9	ppm/°C
		C grade, 8-lead SOIC, −40°C < T_A < +125°C		10	40	ppm/°C
DROPOUT VOLTAGE	V_{DO}		2			V
LINE REGULATION	$\Delta V_O/\Delta V_{IN}$	V_{IN} = 12.0 V to 36.0 V, V_{IN} = 12.0 V to 26.0 V for ADR01WARZ, −40°C < T_A < +125°C		7	30	ppm/V
LOAD REGULATION	$\Delta V_O/\Delta I_{LOAD}$	I_{LOAD} = 0 mA to 10 mA, −40°C < T_A < +125°C, V_{IN} = 15.0 V		40	70	ppm/mA
QUIESCENT CURRENT	I_{IN}	No load, −40°C < T_A < +125°C		0.65	1	mA
VOLTAGE NOISE	$e_{N\ p\text{-}p}$	0.1 Hz to 10.0 Hz		20		µV p-p
VOLTAGE NOISE DENSITY	e_N	1 kHz		510		nV/√Hz
TURN-ON SETTLING TIME	t_R			4		µs
LONG-TERM STABILITY[1]	ΔV_O	1000 hours		50		ppm
OUTPUT VOLTAGE HYSTERESIS	ΔV_{O_HYS}			70		ppm
RIPPLE REJECTION RATIO	RRR	f_{IN} = 10 kHz		−75		dB
SHORT CIRCUIT TO GND	I_{SC}			30		mA
TEMPERATURE SENSOR						
Voltage Output at TEMP Pin	V_{TEMP}			550		mV
Temperature Sensitivity	TCV_{TEMP}			1.96		mV/°C

[1] The long-term stability specification is noncumulative. The drift in subsequent 1000 hour periods is significantly lower than in the first 1000 hour period.

ADR02 ELECTRICAL CHARACTERISTICS

V_{IN} = 7.0 V to 36.0 V, V_{IN} = 7.0 V to 26.0 V for ADR02WARZ, T_A = 25°C, unless otherwise noted.

Table 3.

Parameter	Symbol	Conditions	Min	Typ	Max	Unit
OUTPUT VOLTAGE	V_O	A and C grades	4.995	5.000	5.005	V
INITIAL ACCURACY	V_{OERR}	A and C grades			5	mV
					0.1	%
OUTPUT VOLTAGE	V_O	B grade	4.997	5.000	5.003	V
INITIAL ACCURACY	V_{OERR}	B grade			3	mV
					0.06	%
TEMPERATURE COEFFICIENT	T_{CVO}	A grade, 8-lead SOIC, −40°C < T_A < +125°C		3	10	ppm/°C
		A grade, 5-lead TSOT, −40°C < T_A < +125°C			25	ppm/°C
		A grade, 5-lead SC70, −40°C < T_A < +125°C			25	ppm/°C
		A grade, 5-lead SC70, −55°C < T_A < +125°C			30	ppm/°C
		B grade, 8-lead SOIC, −40°C < T_A < +125°C		1	3	ppm/°C
		B grade, 5-lead TSOT, −40°C < T_A < +125°C			9	ppm/°C
		B grade, 5-lead SC70, −40°C < T_A < +125°C			9	ppm/°C
		C grade, 8-lead SOIC, −40°C < T_A < +125°C		10	40	ppm/°C
DROPOUT VOLTAGE	V_{DO}		2			V
LINE REGULATION	$\Delta V_O/\Delta V_{IN}$	V_{IN} = 7.0 V to 36.0 V, V_{IN} = 7.0 V to 26.0 V for ADR02WARZ, −40°C < T_A < +125°C		7	30	ppm/V
		V_{IN} = 7.0 V to 36.0 V, −55°C < T_A < +125°C		7	40	ppm/V
LOAD REGULATION	$\Delta V_O/\Delta I_{LOAD}$	I_{LOAD} = 0 mA to 10 mA, −40°C < T_A < +125°C, V_{IN} = 10.0 V		40	70	ppm/mA
		I_{LOAD} = 0 mA to 10 mA, −55°C < T_A < +125°C, V_{IN} = 10.0 V		45	80	ppm/mA
QUIESCENT CURRENT	I_{IN}	No load, −40°C < T_A < +125°C		0.65	1	mA
VOLTAGE NOISE	$e_{N\ p-p}$	0.1 Hz to 10.0 Hz		10		µV p-p
VOLTAGE NOISE DENSITY	e_N	1 kHz		230		nV/√Hz
TURN-ON SETTLING TIME	t_R			4		µs
LONG-TERM STABILITY[1]	ΔV_O	1000 hours		50		ppm
OUTPUT VOLTAGE HYSTERESIS	ΔV_{O_HYS}			70		ppm
		−55°C < T_A < +125°C		80		ppm
RIPPLE REJECTION RATIO	RRR	f_{IN} = 10 kHz		−75		dB
SHORT CIRCUIT TO GND	I_{SC}			30		mA
TEMPERATURE SENSOR						
Voltage Output at TEMP Pin	V_{TEMP}			550		mV
Temperature Sensitivity	TCV_{TEMP}			1.96		mV/°C

[1] The long-term stability specification is noncumulative. The drift in subsequent 1000 hour periods is significantly lower than in the first 1000 hour period.

ADR03 ELECTRICAL CHARACTERISTICS

V_{IN} = 4.5 V to 36.0 V, V_{IN} = 4.5 V to 26.0 V for ADR03WARZ, T_A = 25°C, unless otherwise noted.

Table 4.

Parameter	Symbol	Conditions	Min	Typ	Max	Unit
OUTPUT VOLTAGE	V_O	A and C grades	2.495	2.500	2.505	V
INITIAL ACCURACY	V_{OERR}	A and C grades			5	mV
					0.2	%
OUTPUT VOLTAGE	V_O	B grades	2.4975	2.5000	2.5025	V
INITIAL ACCURACY	V_{OERR}	B grades			2.5	mV
					0.1	%
TEMPERATURE COEFFICIENT	TCV_O	A grade, 8-lead SOIC, –40°C < T_A < +125°C		3	10	ppm/°C
		A grade, 5-lead TSOT, –40°C < T_A < +125°C			25	ppm/°C
		A grade, 5-lead SC70, –40°C < T_A < +125°C			25	ppm/°C
		A grade, 5-lead SC70, –55°C < T_A < +125°C			30	ppm/°C
		B grade, 8-lead SOIC, –40°C < T_A < +125°C		1	3	ppm/°C
		B grade, 5-lead TSOT, –40°C < T_A < +125°C			9	ppm/°C
		B grade, 5-lead SC70, –40°C < T_A < +125°C			9	ppm/°C
		C grade, 8-lead SOIC, –40°C < T_A < +125°C		10	40	ppm/°C
DROPOUT VOLTAGE	V_{DO}		2			V
LINE REGULATION	$\Delta V_O/\Delta V_{IN}$	V_{IN} = 4.5 V to 36.0 V, V_{IN} = 4.5 V to 26.0 V for ADR03WARZ, –40°C < T_A < +125°C		7	30	ppm/V
		V_{IN} = 4.5 V to 36.0 V, –55°C < T_A < +125°C		7	40	ppm/V
LOAD REGULATION	$\Delta V_O/\Delta I_{LOAD}$	I_{LOAD} = 0 mA to 10 mA, –40°C < T_A < +125°C, V_{IN} = 7.0 V		25	70	ppm/mA
		I_{LOAD} = 0 mA to 10 mA, –55°C < T_A < +125°C, V_{IN} = 7.0 V		45	80	ppm/mA
QUIESCENT CURRENT	I_{IN}	No load, –40°C < T_A < +125°C		0.65	1	mA
VOLTAGE NOISE	$e_{N\ p-p}$	0.1 Hz to 10.0 Hz		6		µV p-p
VOLTAGE NOISE DENSITY	e_N	1 kHz		230		nV/√Hz
TURN-ON SETTLING TIME	t_R			4		µs
LONG-TERM STABILITY[1]	ΔV_O	1000 hours		50		ppm
OUTPUT VOLTAGE HYSTERESIS	ΔV_{O_HYS}			70		ppm
		–55°C < T_A < +125°C		80		ppm
RIPPLE REJECTION RATIO	RRR	f_{IN} = 10 kHz		–75		dB
SHORT CIRCUIT TO GND	I_{SC}			30		mA
TEMPERATURE SENSOR						
Voltage Output at TEMP Pin	V_{TEMP}			550		mV
Temperature Sensitivity	TCV_{TEMP}			1.96		mV/°C

[1] The long-term stability specification is noncumulative. The drift in subsequent 1000 hour periods is significantly lower than in the first 1000 hour period.

ADR06 ELECTRICAL CHARACTERISTICS

V_{IN} = 5.0 V to 36.0 V, V_{IN} = 5.0 V to 26.0 V for ADR06WARZ, T_A = 25°C, unless otherwise noted.

Table 5.

Parameter	Symbol	Conditions	Min	Typ	Max	Unit
OUTPUT VOLTAGE	V_O	A and C grades	2.994	3.000	3.006	V
INITIAL ACCURACY	V_{OERR}	A and C grades			6	mV
					0.2	%
OUTPUT VOLTAGE	V_O	B grade	2.997	3.000	3.003	V
INITIAL ACCURACY	V_{OERR}	B grade			3	mV
					0.1	%
TEMPERATURE COEFFICIENT	TCV_O	A grade, 8-lead SOIC, −40°C < T_A < +125°C		3	10	ppm/°C
		A grade, 5-lead TSOT, −40°C < T_A < +125°C			25	ppm/°C
		A grade, 5-lead SC70, −40°C < T_A < +125°C			25	ppm/°C
		B grade, 8-lead SOIC, −40°C < T_A < +125°C		1	3	ppm/°C
		B grade, 5-lead TSOT, −40°C < T_A < +125°C			9	ppm/°C
		B grade, 5-lead SC70, −40°C < T_A < +125°C			9	ppm/°C
		C grade, 8-lead SOIC, −40°C < T_A < +125°C		10	40	ppm/°C
DROPOUT VOLTAGE	V_{DO}		2			V
LINE REGULATION	$\Delta V_O/\Delta V_{IN}$	V_{IN} = 5.0 V to 36.0 V, V_{IN} = 5.0 V to 26.0 V for ADR06WARZ, −40°C < T_A < +125°C		7	30	ppm/V
LOAD REGULATION	$\Delta V_O/\Delta I_{LOAD}$	I_{LOAD} = 0 mA to 10 mA, −40°C < T_A < +125°C, V_{IN} = 7.0 V		40	70	ppm/mA
QUIESCENT CURRENT	I_{IN}	No load, −40°C < T_A < +125°C		0.65	1	mA
VOLTAGE NOISE	$e_{N\ p-p}$	0.1 Hz to 10.0 Hz		10		µV p-p
VOLTAGE NOISE DENSITY	e_N	1 kHz		510		nV/√Hz
TURN-ON SETTLING TIME	t_R			4		µs
LONG-TERM STABILITY[1]	ΔV_O	1000 hours		50		ppm
OUTPUT VOLTAGE HYSTERESIS	ΔV_{O_HYS}			70		ppm
RIPPLE REJECTION RATIO	RRR	f_{IN} = 10 kHz		−75		dB
SHORT CIRCUIT TO GND	I_{SC}			30		mA
TEMPERATURE SENSOR						
Voltage Output at TEMP Pin	V_{TEMP}			550		mV
Temperature Sensitivity	TCV_{TEMP}			1.96		mV/°C

[1] The long-term stability specification is noncumulative. The drift in subsequent 1000 hour periods is significantly lower than in the first 1000 hour period.

ABSOLUTE MAXIMUM RATINGS

Ratings are at 25°C, unless otherwise noted.

Table 6.

Parameter	Rating
Supply Voltage	36.0 V
Output Short-Circuit Duration to GND	Indefinite
Storage Temperature Range	−65°C to +150°C
Operating Temperature Range	−40°C to +125°C
Junction Temperature Range	−65°C to +150°C
Lead Temperature Range (Soldering, 60 sec)	300°C

Stresses above those listed under Absolute Maximum Ratings may cause permanent damage to the device. This is a stress rating only; functional operation of the device at these or any other conditions above those indicated in the operational section of this specification is not implied. Exposure to absolute maximum rating conditions for extended periods may affect device reliability.

THERMAL RESISTANCE

θ_{JA} is specified for the worst-case conditions, that is, a device soldered in a circuit board for surface-mount packages.

Table 7. Thermal Resistance

Package Type	θ_{JA}	θ_{JC}	Unit
5-Lead SC70 (KS-5)	376	189	°C/W
5-Lead TSOT (UJ-5)	230	146	°C/W
8-Lead SOIC (R-8)	130	43	°C/W

ESD CAUTION



ESD (electrostatic discharge) sensitive device. Charged devices and circuit boards can discharge without detection. Although this product features patented or proprietary protection circuitry, damage may occur on devices subjected to high energy ESD. Therefore, proper ESD precautions should be taken to avoid performance degradation or loss of functionality.

TERMINOLOGY

Dropout Voltage (V_{DO})
Dropout voltage, sometimes referred to as supply voltage headroom or supply output voltage differential, is defined as the minimum voltage differential between the input and output necessary for the device to operate, such as

$$V_{DO} = (V_{IN} - V_{OUT})\min|I_L = Constant$$

Because the dropout voltage depends upon the current passing through the device, it is always specified for a given load current.

Temperature Coefficient (TCV_O)
The temperature coefficient relates the change in output voltage to the change in ambient temperature of the device, as normalized by the output voltage at 25°C. This parameter is expressed in ppm/°C and can be determined by the following equation:

$$TCV_O = \frac{V_{OUT}(T_2) - V_{OUT}(T_1)}{V_{OUT}(25^\circ C) \times (T_2 - T_1)} \times 10^6 \left[\text{ppm}/^\circ\text{C}\right]$$

where:
$V_{OUT}(25°C)$ is the output voltage at 25°C.
$V_{OUT}(T_1)$ is the output voltage at Temperature 1.
$V_{OUT}(T_2)$ is the output voltage at Temperature 2.

Output Voltage Hysteresis (ΔV_{OUT_HYS})
Output voltage hysteresis represents the change in output voltage after the device is exposed to a specified temperature cycle. This may be expressed as either a shift in voltage or a difference in parts per million from the nominal output as follows:

$$V_{OUT_HYS} = V_{OUT}(25°C) - V_{OUT_TC}\ [\text{V}]$$

$$V_{OUT_HYS} = \frac{V_{OUT}(25^\circ C) - V_{OUT_TC}}{V_{OUT}(25^\circ C)} \times 10^6\ [\text{ppm}]$$

where:
$V_{OUT}(25°C)$ is the output voltage at 25°C.

V_{OUT_TC} is the output voltage after temperature cycling.

Thermal hysteresis occurs as a result of forces exhibited upon the internal die by its packaging. The effect is more pronounced in parts with smaller packages.

Long-Term Stability (ΔV_{OUT_LTD})
Long-term stability refers to the shift in output voltage at 25°C after 1000 hours of operation in a 25°C environment. This may also be expressed as either a shift in voltage or a difference in parts per million from the nominal output as follows:

$$\Delta V_{OUT_LTD} = |V_{OUT}(t_1) - V_{OUT}(t_0)|\ [\text{V}]$$

$$\Delta V_{OUT_LTD} = \left|\frac{V_{OUT}(t_1) - V_{OUT}(t_0)}{V_{OUT}(t_0)}\right| \times 10^6\ [\text{ppm}]$$

where,
$V_{OUT}(t_0)$ is the V_{OUT} at 25°C at Time 0.
$V_{OUT}(t_1)$ is the V_{OUT} at 25°C after 1000 hours of operation at 25°C.

Line Regulation
Line regulation refers to the change in output voltage in response to a given change in input voltage, and is expressed in either percent per volt, parts per million per volt, or microvolt per volt change in input voltage. This parameter accounts for the effects of self-heating.

Load Regulation
Load regulation refers to the change in output voltage in response to a given change in load current, and is expressed in either microvolts per milliampere, parts per million per milliampere, or ohms of dc output resistance. This parameter accounts for the effects of self-heating.

TYPICAL PERFORMANCE CHARACTERISTICS

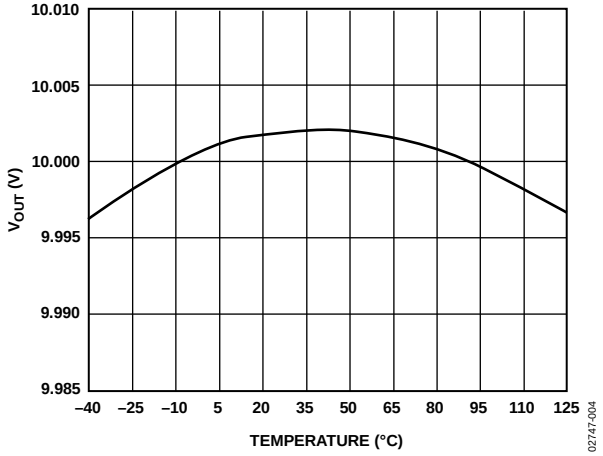

Figure 3. ADR01 Typical Output Voltage vs. Temperature

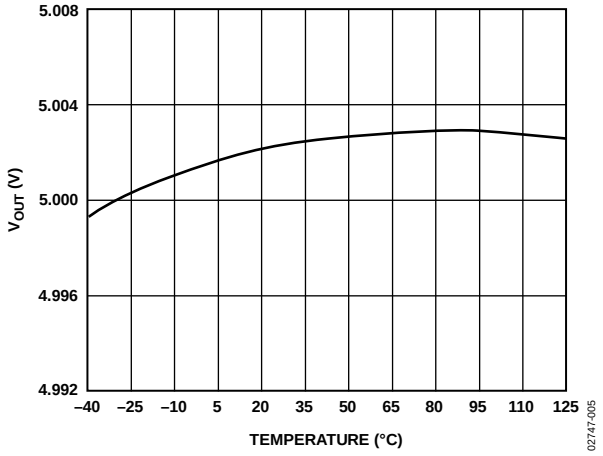

Figure 4. ADR02 Typical Output Voltage vs. Temperature

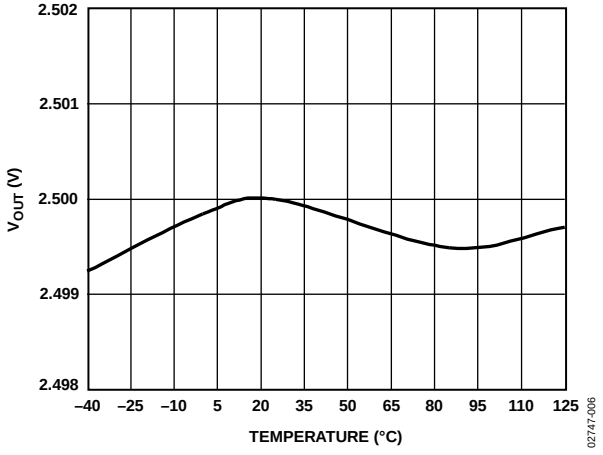

Figure 5. ADR03 Typical Output Voltage vs. Temperature

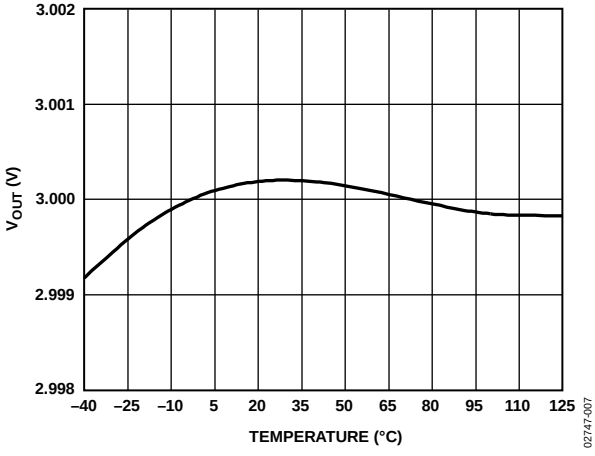

Figure 6. ADR06 Typical Output Voltage vs. Temperature

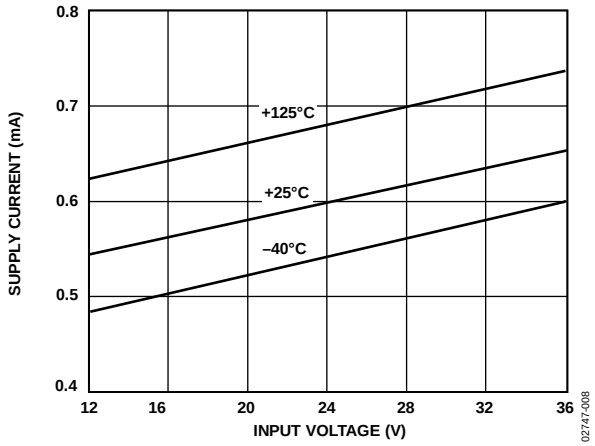

Figure 7. ADR01 Supply Current vs. Input Voltage

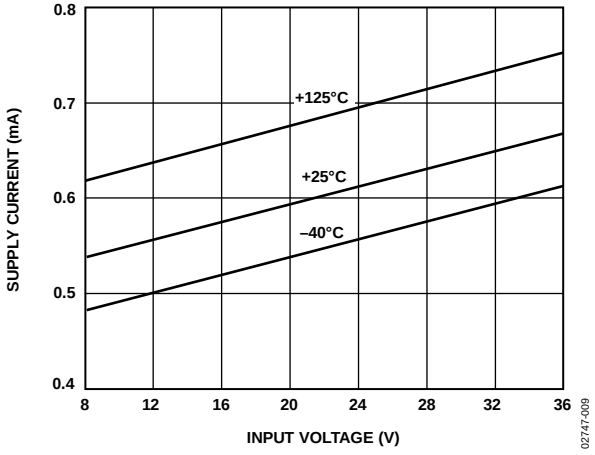

Figure 8. ADR02 Supply Current vs. Input Voltage

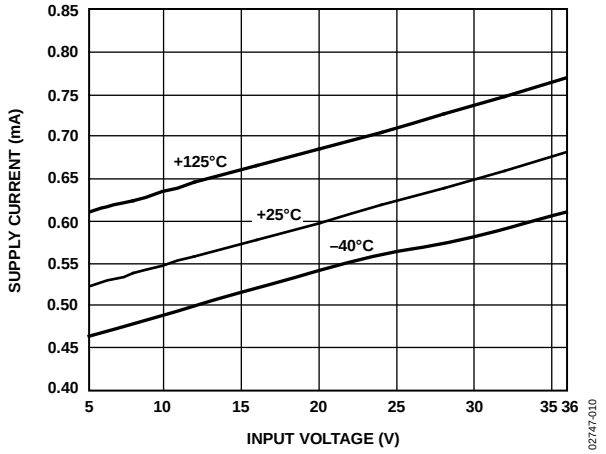

Figure 9. ADR03 Supply Current vs. Input Voltage

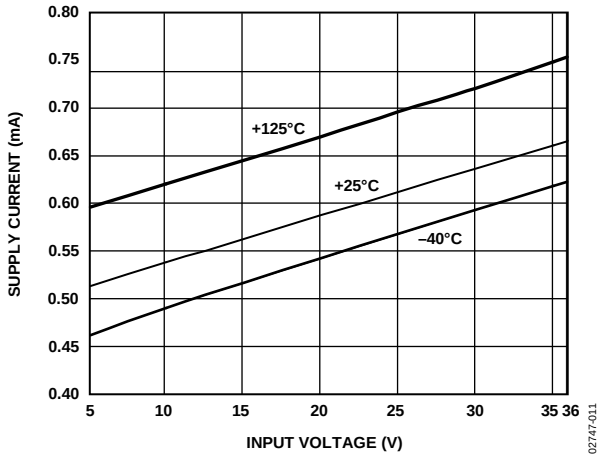

Figure 10. ADR06 Supply Current vs. Input Voltage

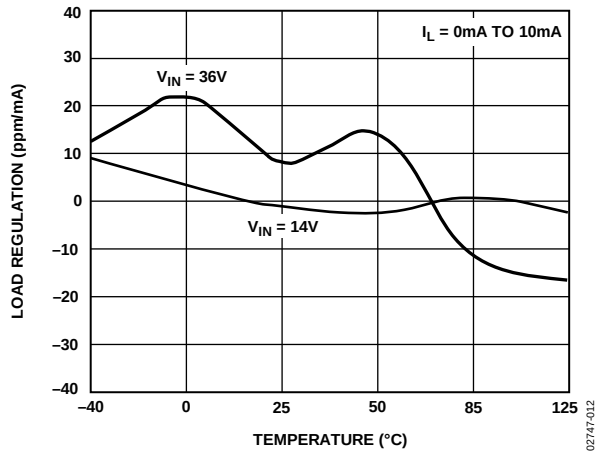

Figure 11. ADR01 Load Regulation vs. Temperature

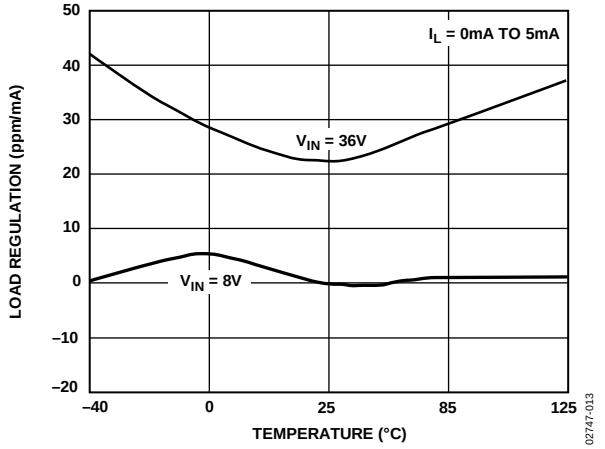

Figure 12. ADR02 Load Regulation vs. Temperature

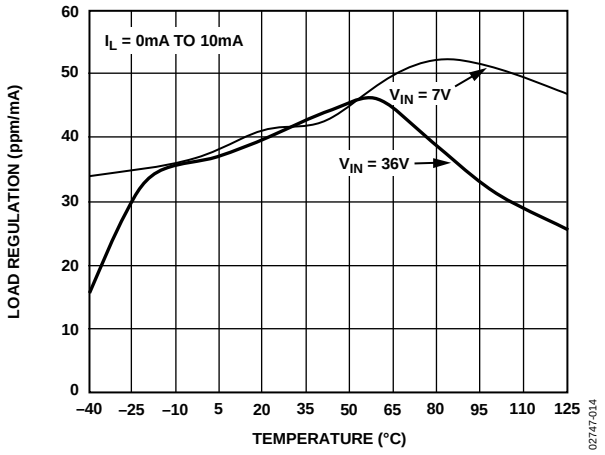

Figure 13. ADR03 Load Regulation vs. Temperature

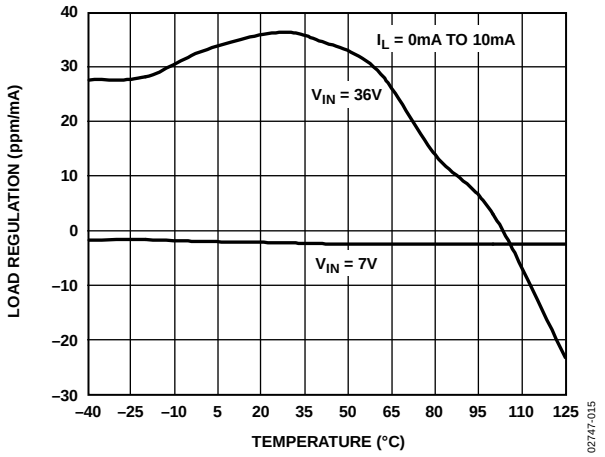

Figure 14. ADR06 Load Regulation vs. Temperature

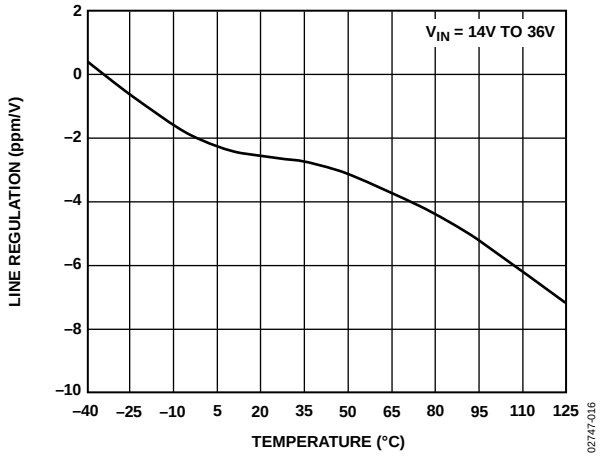

Figure 15. ADR01 Line Regulation vs. Temperature

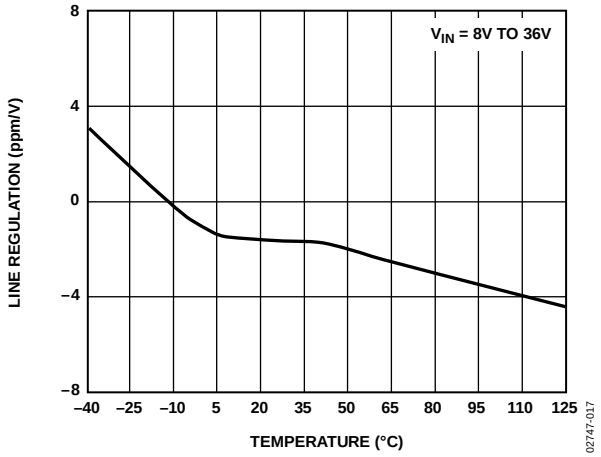

Figure 16. ADR02 Line Regulation vs. Temperature

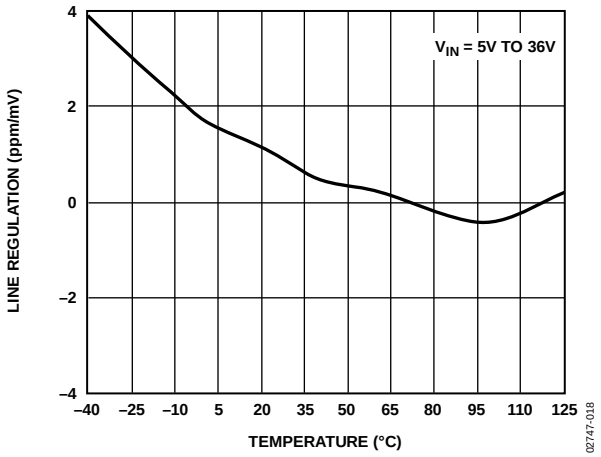

Figure 17. ADR03 Line Regulation vs. Temperature

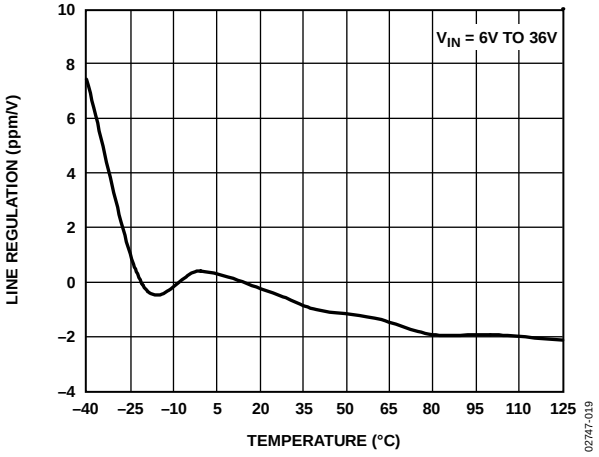

Figure 18. ADR06 Line Regulation vs. Temperature

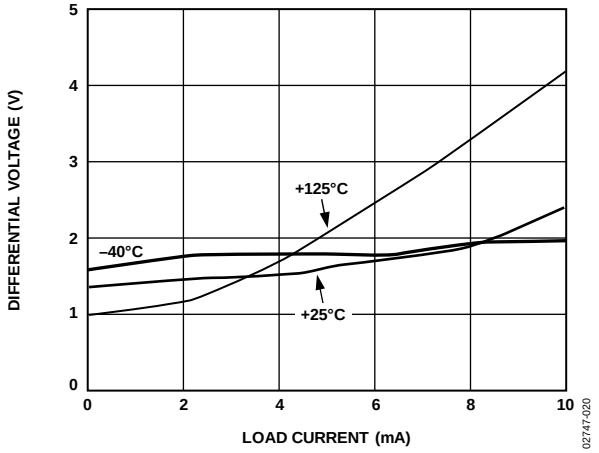

Figure 19. ADR01 Minimum Input-Output Voltage Differential vs. Load Current

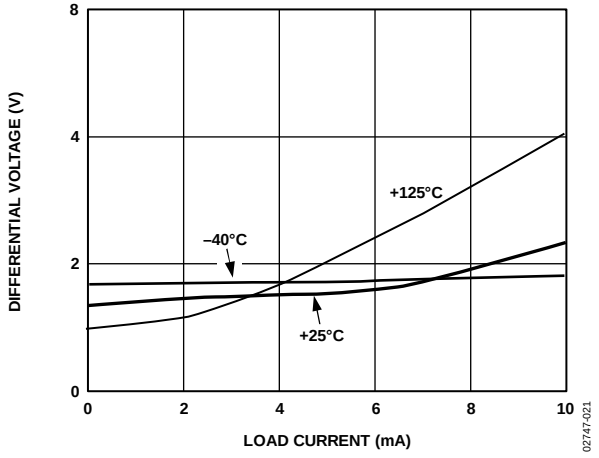

Figure 20. ADR02 Dropout Voltage vs. Load Current

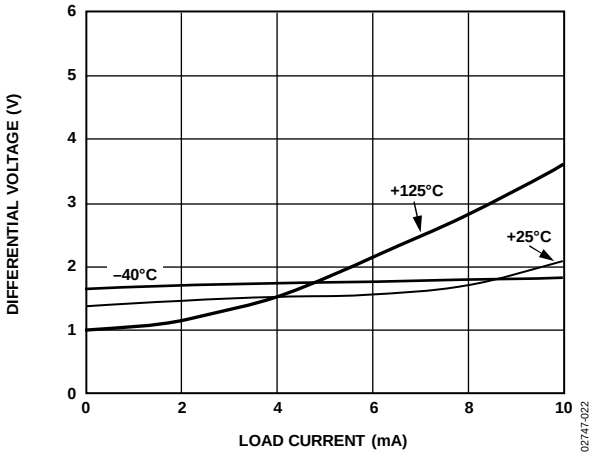

Figure 21. ADR03 Dropout Voltage vs. Load Current

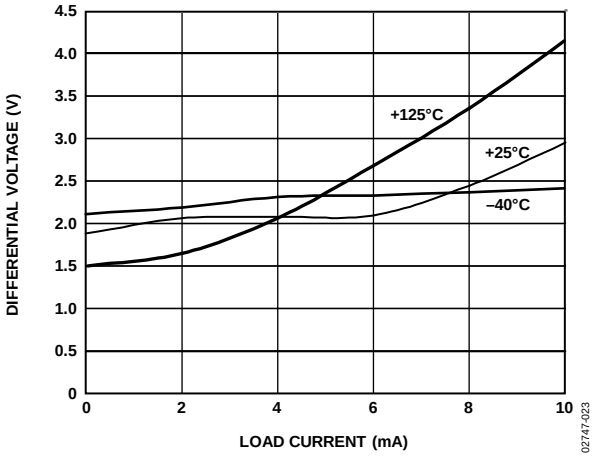

Figure 22. ADR06 Dropout Voltage vs. Load Current

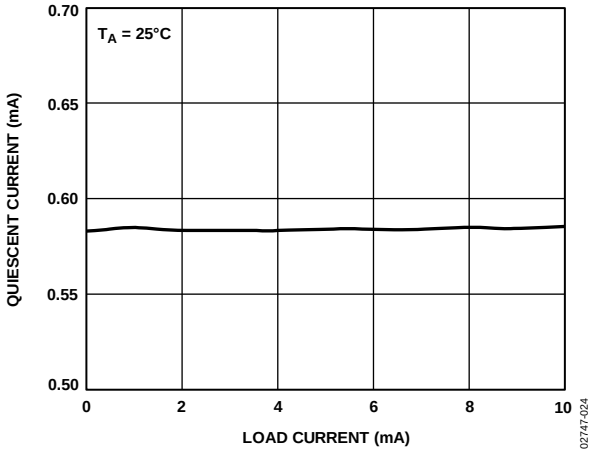

Figure 23. ADR01 Quiescent Current vs. Load Current

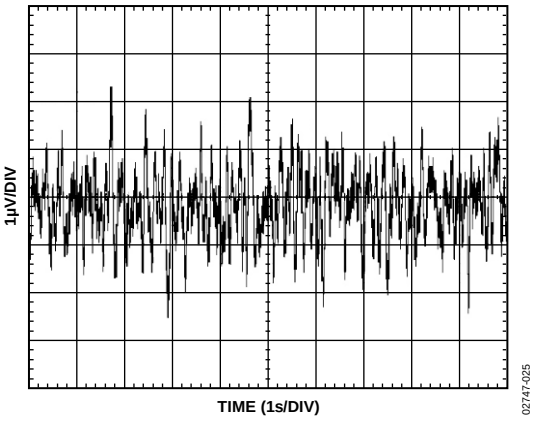

Figure 24. ADR02 Typical Noise Voltage 0.1 Hz to 10.0 Hz

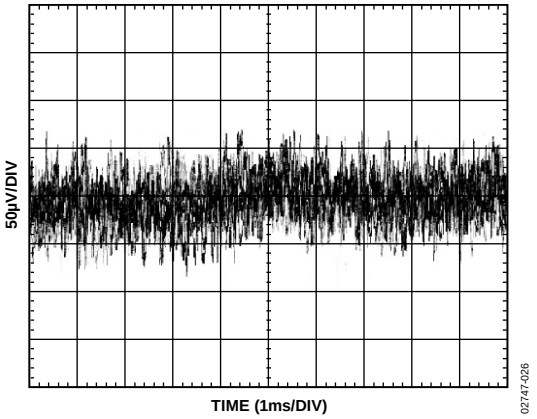

Figure 25. ADR02 Typical Noise Voltage 10 Hz to 10 kHz

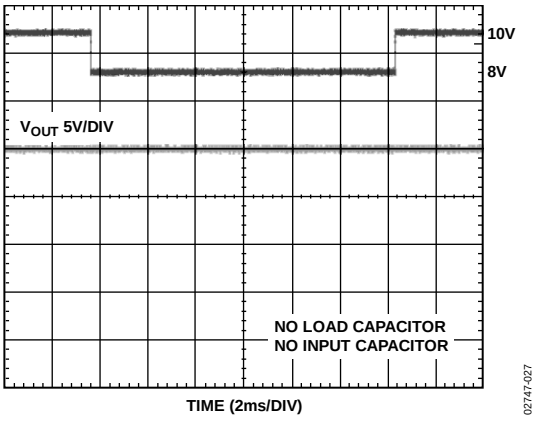

Figure 26. ADR02 Line Transient Response

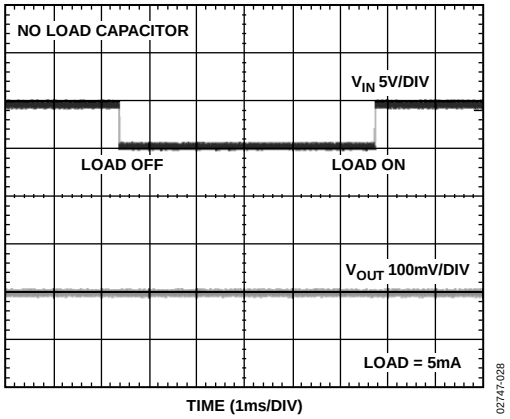

Figure 27. ADR02 Load Transient Response

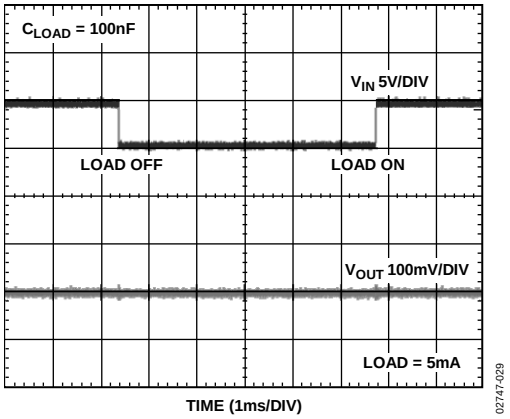

Figure 28. ADR02 Load Transient Response

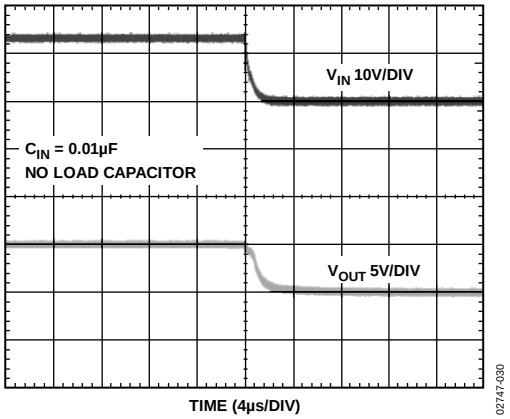

Figure 29. ADR02 Turn-Off Response

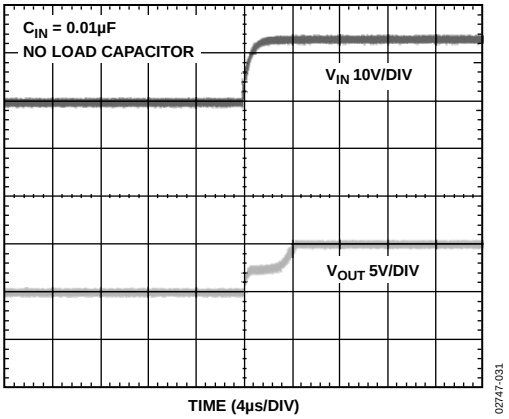

Figure 30. ADR02 Turn-On Response

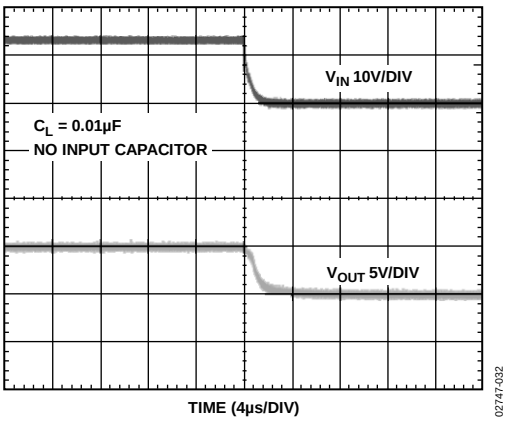

Figure 31. ADR02 Turn-Off with No Input Capacitor

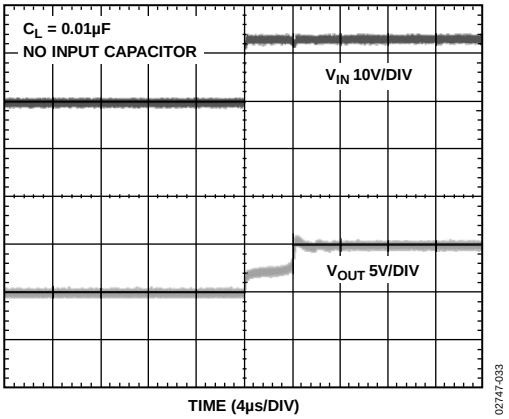

Figure 32. ADR02 Turn-Off with No Input Capacitor

APPLICATIONS INFORMATION

OVERVIEW

The ADR01/ADR02/ADR03/ADR06 are high precision, low drift 10.0 V, 5.0 V, 2.5 V, and 3.0 V voltage references available in an ultracompact footprint. The 8-lead SOIC versions of the devices are drop-in replacements of the REF01/REF02/REF03 sockets with improved cost and performance.

These devices are standard band gap references (see Figure 34). The band gap cell contains two NPN transistors (Q18 and Q19) that differ in emitter area by 2×. The difference in their V_{BE} produces a proportional-to-absolute temperature current (PTAT) in R14, and, when combined with the V_{BE} of Q19, produces a band gap voltage, V_{BG}, that is almost constant in temperature. With an internal op amp and the feedback network of R5 and R6, V_O is set precisely at 10.0 V, 5.0 V, 2.5 V, and 3.0 V for the ADR01, ADR02, ADR06, and ADR03, respectively. Precision laser trimming of the resistors and other proprietary circuit techniques are used to further enhance the initial accuracy, temperature curvature, and drift performance of the ADR01/ADR02/ADR03/ADR06.

The PTAT voltage is made available at the TEMP pin of the ADR01/ADR02/ADR03/ADR06. It has a stable 1.96 mV/°C temperature coefficient, such that users can estimate the temperature change of the device by knowing the voltage change at the TEMP pin.

APPLYING THE ADR01/ADR02/ADR03/ADR06

Input and Output Capacitors

Although the ADR01/ADR02/ADR03/ADR06 are designed to function stably without any external components, connecting a 0.1 µF ceramic capacitor to the output is highly recommended to improve stability and filter out low level voltage noise. An additional 1 µF to 10 µF electrolytic, tantalum, or ceramic capacitor can be added in parallel to improve transient performance in response to sudden changes in load current; however, the designer should keep in mind that doing so increases the turn-on time of the device.

A 1 µF to 10 µF electrolytic, tantalum or ceramic capacitor can also be connected to the input to improve transient response in applications where the supply voltage may fluctuate. An additional 0.1 µF ceramic capacitor should be connected in parallel to reduce supply noise. Mount both input and output capacitors as close to the device pins as possible.

Output Adjustment

The ADR01/ADR02/ADR03/ADR06 trim terminal can be used to adjust the output voltage over a nominal voltage. This feature allows a system designer to trim system errors by setting the reference to a voltage other than 10.0 V/5.0 V/2.5 V/3.0 V. For finer adjustment, add a series resistor of 470 kΩ. With the configuration shown in Figure 35, the ADR01 can be adjusted from 9.70 V to 10.05 V, the ADR02 can be adjusted from 4.95 V to 5.02 V, the ADR06 can be adjusted from 2.8 V to 3.3 V, and the ADR03 can be adjusted from 2.3 V to 2.8 V. Adjustment of the output does not significantly affect the temperature performance of the device, provided the temperature coefficients of the resistors are relatively low.

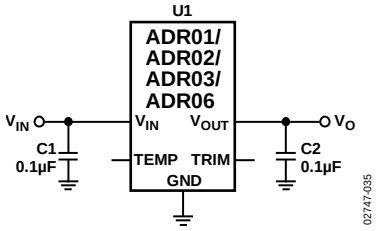

Figure 33. Basic Configuration

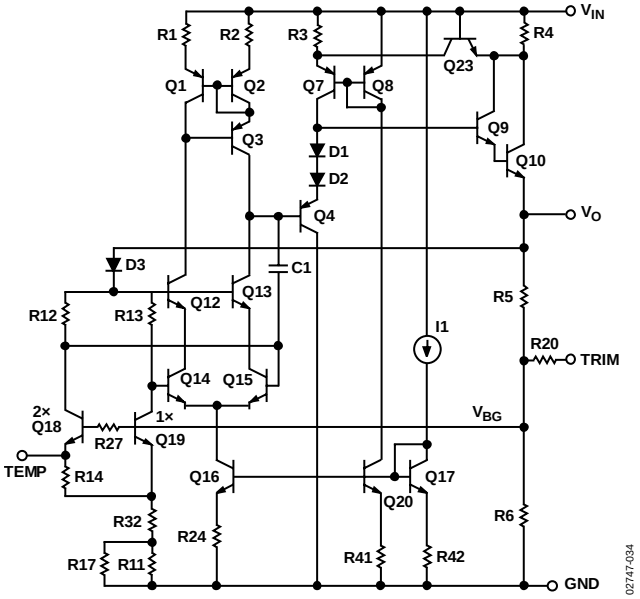

Figure 34. Simplified Schematic Diagram

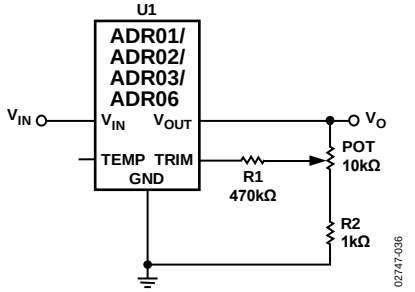

Figure 35. Optional Trim Adjustment

Temperature Monitoring

As described at the end of the Overview section, the ADR01/ADR02/ADR03/ADR06 provide a TEMP output (Pin 1 in Figure 1 and Pin 3 in Figure 2) that varies linearly with temperature. This output can be used to monitor the temperature change in the system. The voltage at V_{TEMP} is approximately 550 mV at 25°C, and the temperature coefficient is approximately 1.96 mV/°C (see Figure 36). A voltage change of 39.2 mV at the TEMP pin corresponds to a 20°C change in temperature.

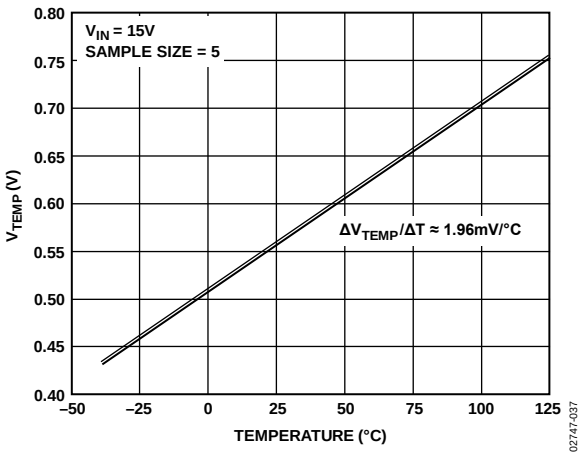

Figure 36. Voltage at TEMP Pin vs. Temperature

The TEMP function is provided as a convenience rather than a precise feature. Because the voltage at the TEMP node is acquired from the band gap core, current pulling from this pin has a significant effect on V_{OUT}. Care must be taken to buffer the TEMP output with a suitable low bias current op amp, such as the AD8601, AD820, or OP1177, all of which result in less than a 100 µV change in ΔV_{OUT} (see Figure 37). Without buffering, even tens of microamps drawn from the TEMP pin can cause V_{OUT} to fall out of specification.

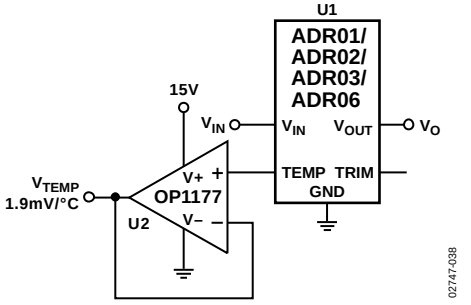

Figure 37. Temperature Monitoring

LOW COST CURRENT SOURCE

Unlike most references, the ADR01/ADR02/ADR03/ADR06 employ an NPN Darlington in which the quiescent current remains constant with respect to the load current, as shown in Figure 23. As a result, a current source can be configured as shown in Figure 38 where $I_{SET} = (V_{OUT} - V_L)/R_{SET}$. I_L is simply the sum of I_{SET} and I_Q. Although simple, I_Q varies typically from 0.55 mA to 0.65 mA, limiting this circuit to general-purpose applications.

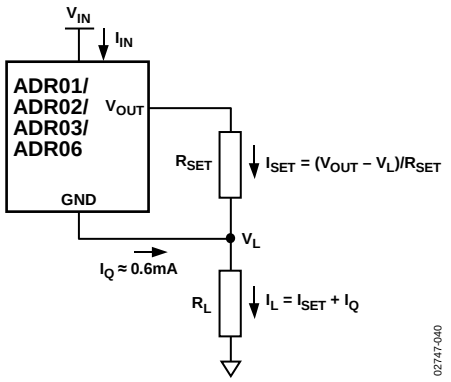

Figure 38. Low Cost Current Source

PRECISION CURRENT SOURCE WITH ADJUSTABLE OUTPUT

Alternatively, a precision current source can be implemented with the circuit shown in Figure 39. By adding a mechanical or digital potentiometer, this circuit becomes an adjustable current source. If a digital potentiometer is used, the load current is simply the voltage across Terminal B to Terminal W of the digital potentiometer divided by R_{SET}.

$$I_L = \frac{V_{REF} \times D}{R_{SET}} \quad (1)$$

where D is the decimal equivalent of the digital potentiometer input code.

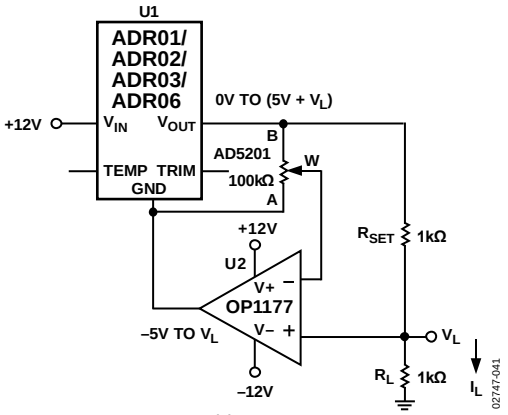

Figure 39. Programmable 0 mA to 5 mA Current Source

To optimize the resolution of this circuit, dual-supply op amps should be used because the ground potential of ADR02 can swing from −5.0 V at zero scale to V_L at full scale of the potentiometer setting.

PROGRAMMABLE 4 mA TO 20 mA CURRENT TRANSMITTER

Because of their precision, adequate current handling, and small footprint, the devices are suitable as the reference sources for many high performance converter circuits. One of these applications is the multichannel 16-bit, 4 mA to 20 mA current transmitter in the industrial control market (see Figure 40). This circuit employs a Howland current pump at the output to yield better efficiency, a lower component count, and a higher voltage compliance than the conventional design with op amps and MOSFETs. In this circuit, if the resistors are matched such that R1 = R1′, R2 = R2′, R3 = R3′, the load current is

$$I_L = \frac{(R2+R3)/R1}{R3'} \times \frac{V_{REF} \times D}{2^N} \quad (2)$$

where *D* is similarly the decimal equivalent of the DAC input code and *N* is the number of bits of the DAC.

According to Equation 2, R3′ can be used to set the sensitivity. R3′ can be made as small as necessary to achieve the current needed within U4 output current driving capability. Alternatively, other resistors can be kept high to conserve power.

In this circuit, the AD8512 is capable of delivering 20 mA of current, and the voltage compliance approaches 15.0 V.

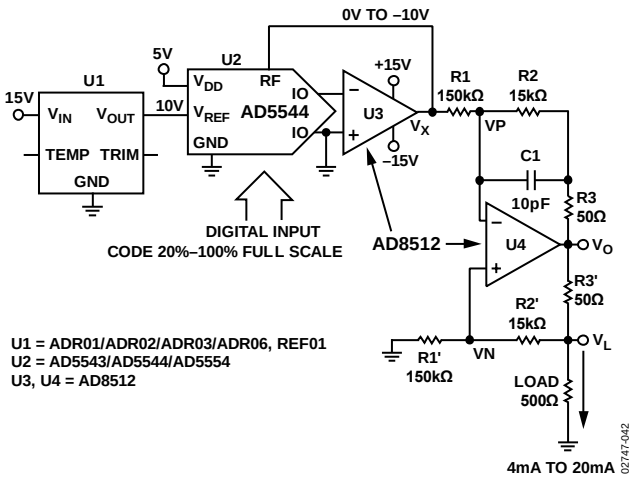

Figure 40. Programmable 4 mA to 20 mA Transmitter

The Howland current pump yields a potentially infinite output impedance, that is highly desirable, but resistance matching is critical in this application. The output impedance can be determined using Equation 3. As shown by this equation, if the resistors are perfectly matched, Z_O is infinite. Alternatively, if they are not matched, Z_O is either positive or negative. If the latter is true, oscillation can occur. For this reason, connect Capacitor C1 in the range of 1 pF to 10 pF between VP and the output terminal of U4 to filter any oscillation.

$$Z_O = \frac{V_t}{I_t} = \frac{R1'}{\left(\frac{R1'R2}{R1R2'} - 1\right)} \quad (3)$$

In this circuit, an ADR01 provides the stable 10.000 V reference for the AD5544 quad 16-bit DAC. The resolution of the adjustable current is 0.3 µA/step; the total worst-case INL error is merely 4 LSBs. Such error is equivalent to 1.2 µA or a 0.006% system error, which is well below most systems' requirements. The result is shown in Figure 41 with measurement taken at 25°C and 70°C; total system error of 4 LSBs at both 25°C and 70°C.

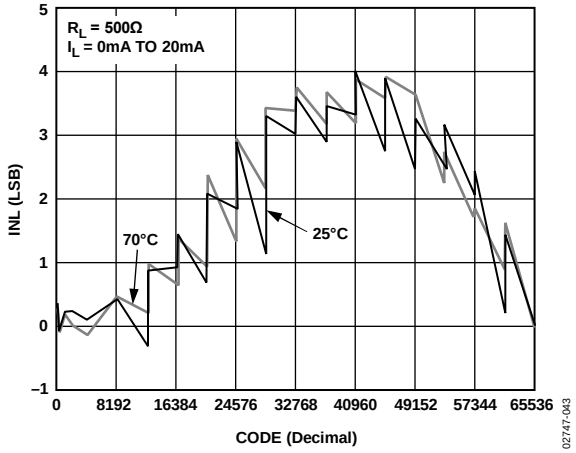

Figure 41. Result of Programmable 4 mA to 20 mA Current Transmitter

PRECISION BOOSTED OUTPUT REGULATOR

A precision voltage output with boosted current capability can be realized with the circuit shown in Figure 42. In this circuit, U2 forces V_O to be equal to V_{REF} by regulating the turn-on of N1, thereby making the load current furnished by V_{IN}. In this configuration, a 50 mA load is achievable at V_{IN} of 15.0 V. Moderate heat is generated on the MOSFET, and higher current can be achieved with a replacement of a larger device. In addition, for a heavy capacitive load with a fast edging input signal, a buffer should be added at the output to enhance the transient response.

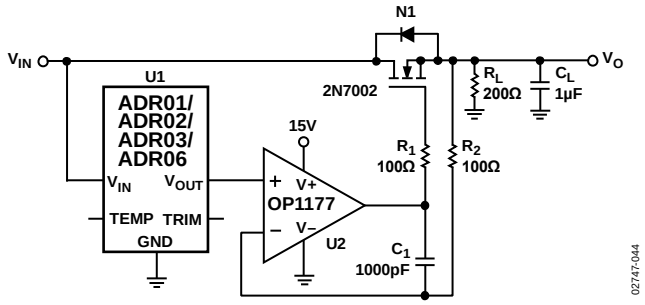

Figure 42. Precision Boosted Output Regulator

OUTLINE DIMENSIONS

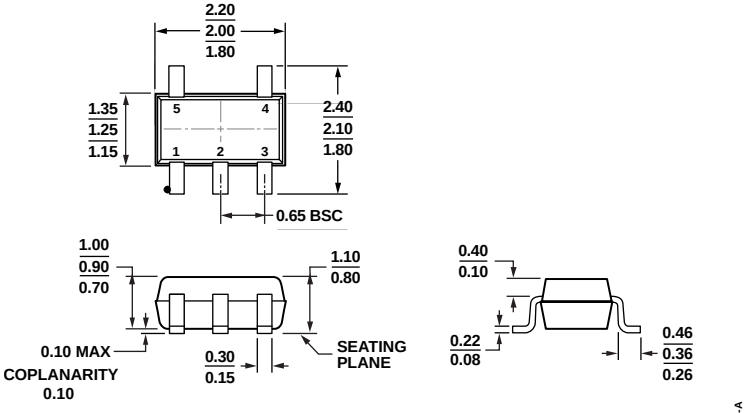

COMPLIANT TO JEDEC STANDARDS MO-203-AA

Figure 43. 5-Lead Thin Shrink Small Outline Transistor Package [SC70]
(KS-5)
Dimensions shown in millimeters

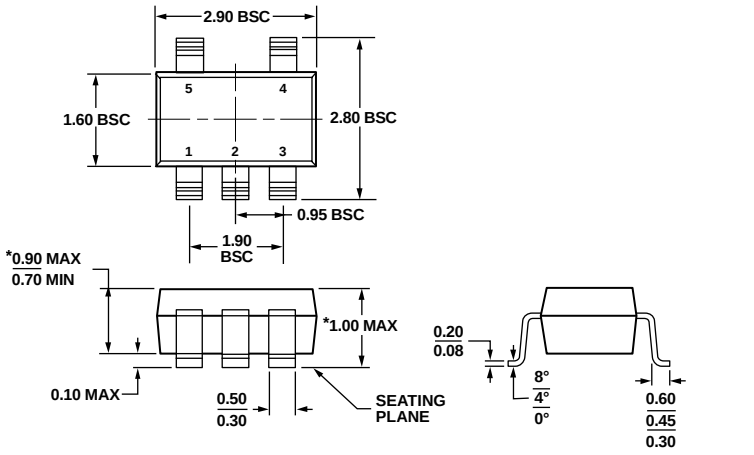

*COMPLIANT TO JEDEC STANDARDS MO-193-AB WITH THE EXCEPTION OF PACKAGE HEIGHT AND THICKNESS.

Figure 44. 5-Lead Thin Small Outline Transistor Package [TSOT]
(UJ-5)
Dimensions shown in millimeters

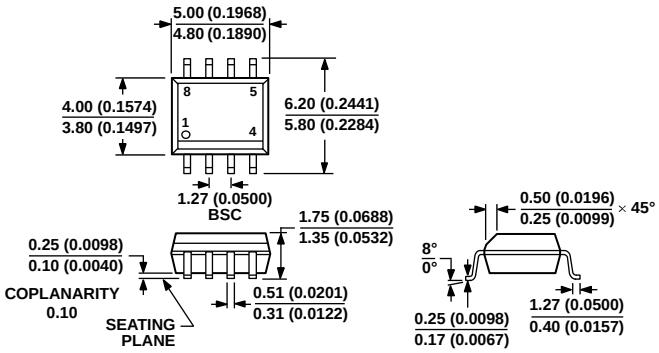

COMPLIANT TO JEDEC STANDARDS MS-012-AA
CONTROLLING DIMENSIONS ARE IN MILLIMETERS; INCH DIMENSIONS (IN PARENTHESES) ARE ROUNDED-OFF MILLIMETER EQUIVALENTS FOR REFERENCE ONLY AND ARE NOT APPROPRIATE FOR USE IN DESIGN.

Figure 45. 8-Lead Standard Small Outline Package [SOIC_N]
Narrow Body (R-8)
Dimensions shown in millimeters and (inches)

ORDERING GUIDES

ADR01 Ordering Guide

Model[1, 2]	Output Voltage V_O (V)	Initial Accuracy (mV)	Initial Accuracy (%)	Temperature Coefficient (ppm/°C)	Temperature Range	Package Description	Package Option	Ordering Quantity	Branding
ADR01ARZ	10	10	0.1	10	−40°C to +125°C	8-Lead SOIC_N	R-8	98	
ADR01ARZ-REEL7	10	10	0.1	10	−40°C to +125°C	8-Lead SOIC_N	R-8	1,000	
ADR01BRZ	10	5	0.05	3	−40°C to +125°C	8-Lead SOIC_N	R-8	98	
ADR01BRZ-REEL7	10	5	0.05	3	−40°C to +125°C	8-Lead SOIC_N	R-8	1000	
ADR01WARZ-R7	10	14	0.14	10	−40°C to +125°C	8-Lead SOIC_N	R-8	1,000	
ADR01WARZ-RL	10	14	0.14	10	−40°C to +125°C	8-Lead SOIC_N	R-8	2,500	
ADR01AUJZ-REEL7	10	10	0.1	25	−40°C to +125°C	5-Lead TSOT	UJ-5	3,000	R1E
ADR01BUJZ-REEL7	10	5	0.05	9	−40°C to +125°C	5-Lead TSOT	UJ-5	3,000	R1F
ADR01AKSZ-REEL7	10	10	0.1	25	−40°C to +125°C	5-Lead SC70	KS-5	3,000	R1E
ADR01BKSZ-REEL7	10	5	0.05	9	−40°C to +125°C	5-Lead SC70	KS-5	3,000	R1F
ADR01CRZ	10	10	0.1	40	−40°C to +125°C	8-Lead SOIC_N	R-8	98	
ADR01CRZ-REEL	10	10	0.1	40	−40°C to +125°C	8-Lead SOIC_N	R-8	2,500	

[1] Z = RoHS Compliant Part.
[2] W = Qualified for automotive applications.

ADR02 Ordering Guide

Model[1, 2]	Output Voltage V_O (V)	Initial Accuracy (mV)	Initial Accuracy (%)	Temperature Coefficient (ppm/°C)	Temperature Range	Package Description	Package Option	Ordering Quantity	Branding
ADR02AR	5	5	0.1	10	−40°C to +125°C	8-Lead SOIC_N	R-8	98	
ADR02AR-REEL	5	5	0.1	10	−40°C to +125°C	8-Lead SOIC_N	R-8	2,500	
ADR02AR-REEL7	5	5	0.1	10	−40°C to +125°C	8-Lead SOIC_N	R-8	1,000	
ADR02ARZ	5	5	0.1	10	−40°C to +125°C	8-Lead SOIC_N	R-8	98	
ADR02ARZ-REEL	5	5	0.1	10	−40°C to +125°C	8-Lead SOIC_N	R-8	2,500	
ADR02ARZ-REEL7	5	5	0.1	10	−40°C to +125°C	8-Lead SOIC_N	R-8	1,000	
ADR02WARZ-REEL	5	5	0.1	10	−40°C to +125°C	8-Lead SOIC_N	R-8	2,500	
ADR02WARZ-REEL7	5	5	0.1	10	−40°C to +125°C	8-Lead SOIC_N	R-8	1,000	
ADR02BRZ	5	3	0.06	3	−40°C to +125°C	8-Lead SOIC_N	R-8	98	
ADR02BRZ-REEL7	5	3	0.06	3	−40°C to +125°C	8-Lead SOIC_N	R-8	1,000	
ADR02AUJZ-REEL7	5	5	0.1	25	−40°C to +125°C	5-Lead TSOT	UJ-5	3,000	R1G
ADR02BUJZ-R2	5	3	0.06	9	−40°C to +125°C	5-Lead TSOT	UJ-5	250	R1H
ADR02BUJZ-REEL7	5	3	0.06	9	−40°C to +125°C	5-Lead TSOT	UJ-5	3,000	R1H
ADR02AKSZ-REEL7	5	5	0.1	25	−40°C to +125°C	5-Lead SC70	KS-5	3,000	R1G
ADR02BKSZ-REEL7	5	3	0.06	9	−40°C to +125°C	5-Lead SC70	KS-5	3,000	R1H
ADR02CRZ	5	5	0.1	40	−40°C to +125°C	8-Lead SOIC_N	R-8	98	
ADR02CRZ-REEL	5	5	0.1	40	−40°C to +125°C	8-Lead SOIC_N	R-8	2,500	

[1] Z = RoHS Compliant Part.
[2] W = Qualified for automotive applications.

ADR03 Ordering Guide

Model[1, 2]	Output Voltage V_O (V)	Initial Accuracy (mV)	Initial Accuracy (%)	Temperature Coefficient (ppm/°C)	Temperature Range	Package Description	Package Option	Ordering Quantity	Branding
ADR03AR-REEL7	2.5	5	0.2	10	−40°C to +125°C	8-Lead SOIC_N	R-8	1,000	
ADR03ARZ	2.5	5	0.2	10	−40°C to +125°C	8-Lead SOIC_N	R-8	98	
ADR03ARZ-REEL7	2.5	5	0.2	10	−40°C to +125°C	8-Lead SOIC_N	R-8	1,000	
ADR03WARZ-R7	2.5	5	0.2	10	−40°C to +125°C	8-Lead SOIC_N	R-8	1,000	
ADR03WARZ-RL	2.5	5	0.2	10	−40°C to +125°C	8-Lead SOIC_N	R-8	2500	
ADR03BR	2.5	2.5	0.1	3	−40°C to +125°C	8-Lead SOIC_N	R-8	98	
ADR03BRZ	2.5	2.5	0.1	3	−40°C to +125°C	8-Lead SOIC_N	R-8	98	
ADR03BRZ-REEL7	2.5	2.5	0.1	3	−40°C to +125°C	8-Lead SOIC_N	R-8	1,000	
ADR03AUJZ-REEL7	2.5	5	0.2	25	−40°C to +125°C	5-Lead TSOT	UJ-5	3,000	R1J
ADR03BUJZ-REEL7	2.5	2.5	0.1	9	−40°C to +125°C	5-Lead TSOT	UJ-5	3,000	R1K
ADR03AKSZ-REEL7	2.5	5	0.2	25	−40°C to +125°C	5-Lead SC70	KS-5	3,000	R1J
ADR03BKSZ-REEL7	2.5	2.5	0.1	9	−40°C to +125°C	5-Lead SC70	KS-5	3,000	R1K
ADR03CRZ	2.5	5	0.1	40	−40°C to +125°C	8-Lead SOIC_N	R-8	98	
ADR03CRZ-REEL	2.5	5	0.1	40	−40°C to +125°C	8-Lead SOIC_N	R-8	2,500	

[1] Z = RoHS Compliant Part.
[2] W = Qualified for automotive applications.

ADR06 Ordering Guide

Model[1, 2]	Output Voltage V_O (V)	Initial Accuracy (mV)	Initial Accuracy (%)	Temperature Coefficient (ppm/°C)	Temperature Range	Package Description	Package Option	Ordering Quantity	Branding
ADR06ARZ	3	6	0.2	10	−40°C to +125°C	8-Lead SOIC_N	R-8	98	
ADR06ARZ-REEL7	3	6	0.2	10	−40°C to +125°C	8-Lead SOIC_N	R-8	1,000	
ADR06WARZ-R7	3	6	0.2	10	−40°C to +125°C	8-Lead SOIC_N	R-8	1,000	
ADR06WARZ-RL	3	6	0.2	10	−40°C to +125°C	8-Lead SOIC_N	R-8	2500	
ADR06BRZ	3	3	0.1	3	−40°C to +125°C	8-Lead SOIC_N	R-8	98	
ADR06BRZ-REEL7	3	3	0.1	3	−40°C to +125°C	8-Lead SOIC_N	R-8	1,000	
ADR06AUJZ-REEL7	3	6	0.2	25	−40°C to +125°C	5-Lead TSOT	UJ-5	3,000	R1L
ADR06BUJZ-REEL7	3	3	0.1	9	−40°C to +125°C	5-Lead TSOT	UJ-5	3,000	R1M
ADR06AKSZ-REEL7	3	6	0.2	25	−40°C to +125°C	5-Lead SC70	KS-5	3,000	R1L
ADR06BKSZ-REEL7	3	3	0.1	9	−40°C to +125°C	5-Lead SC70	KS-5	3,000	R1M
ADR06CRZ-REEL	3	6	0.2	40	−40°C to +125°C	8-Lead SOIC_N	R-8	2,500	

[1] Z = RoHS Compliant Part.
[2] W = Qualified for automotive applications.

AUTOMOTIVE PRODUCTS

The ADR01W, ADR02W, ADR03W and ADR06W models are available with controlled manufacturing to support the quality and reliability requirements of automotive applications. Note that these automotive models may have specifications that differ from the commercial models; therefore, designers should review the Specifications section of this data sheet carefully. Only the automotive grade products shown are available for use in automotive applications. Contact your local Analog Devices account representative for specific product ordering information and to obtain the specific Automotive Reliability reports for these models.

©2002–2012 Analog Devices, Inc. All rights reserved. Trademarks and registered trademarks are the property of their respective owners.
D02747-0-1/12(R)