Mobile I/O Expander and QWERTY Keypad Controller

Data Sheet

ADP5587

FEATURES

- 18-GPIO port expander or 10 × 8 keypad matrix
- GPIOs configurable as GPIs, GPOs, and keypad rows or columns
- I²C interface with auto-increment
- 1.65 V to 3.6 V operation
- Keypad lock capability
- Open-drain interrupt output
- Key press and key release interrupts
- GPI interrupt with level programmability
- Programmable pull-ups
- Key event counter with overflow interrupt
- 275 µs debounce on the reset line and GPIs
- 1 µA typical idle current
- 55 µA typical polling current
- 4 mm × 4 mm LFCSP package
- Small 2 mm x 2 mm WLCSP package, 0.4 mm pitch
- Multiple I²C addresses available for the LFCSP package to allow multiple port expanders on the same bus

APPLICATIONS

- Keypad and I/O expander designed for QWERTY type phones that require a large keypad matrix

FUNCTIONAL BLOCK DIAGRAM

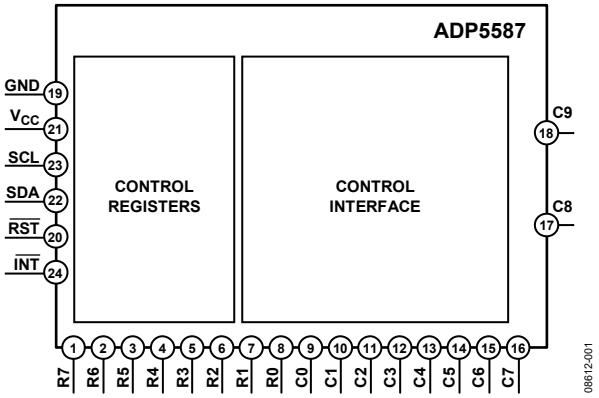

Figure 1.

GENERAL DESCRIPTION

The ADP5587 is an I/O port expander and keypad matrix designed for QWERTY type phones that require a large keypad matrix and expanded I/O lines. I/O expander ICs are used in mobile platforms as a solution to the limited number of GPIOs available in the main processor.

In its small 2 mm × 2 mm package, the ADP5587 contains enough power to handle all key scanning and decoding and to flag the processor of key presses and releases via the I²C interface and interrupt. The ADP5587 frees the main microprocessor from the need to monitor the keypad, thereby minimizing current drain and increasing processor bandwidth. The ADP5587 is also equipped with a buffer/FIFO and key event counter to handle and keep track of up to 10 unprocessed key or GPI events with overflow wrap and interrupt capability.

The ADP5587 has keypad lock capability with an option to trigger or not trigger an interrupt at key presses and releases.

All communication to the main processor is done using one interrupt line and two I²C-compatible interface lines. The ADP5587 can be configured as a keypad matrix of up to 8 rows × 10 columns (a maximum of 80 keys).

When the ADP5587 is used for smaller keypad matrices, unused row and column pins can be reconfigured to act as general-purpose inputs or outputs. R0 to R7 denote the row pins of the matrix, whereas C0 to C9 denote the column pins. At power-up, all rows and columns default to GPIs and must be programmed to function as part of the keypad matrix or as GPOs.

Two options for I²C addresses exist for the LFCSP package to reduce the chance of port contention and allow up to two ADP5587 ICs to operate on the same I²C bus (see the Ordering Guide).

Rev. E
Document Feedback
Information furnished by Analog Devices is believed to be accurate and reliable. However, no responsibility is assumed by Analog Devices for its use, nor for any infringements of patents or other rights of third parties that may result from its use. Specifications subject to change without notice. No license is granted by implication or otherwise under any patent or patent rights of Analog Devices. Trademarks and registered trademarks are the property of their respective owners.

One Technology Way, P.O. Box 9106, Norwood, MA 02062-9106, U.S.A.
Tel: 781.329.4700 ©2009–2019 Analog Devices, Inc. All rights reserved.
Technical Support www.analog.com

TABLE OF CONTENTS

Features ... 1
Applications ... 1
Functional Block Diagram ... 1
General Description ... 1
Revision History ... 2
Specifications ... 3
DC Characteristics ... 3
AC Characteristics ... 4
Absolute Maximum Ratings ... 5
Thermal Resistance ... 5
ESD Caution ... 5
Pin Configurations and Function Descriptions ... 6
Typical Performance Characteristics ... 7
Theory of Operation ... 8
Keypad Operation ... 8
General-Purpose Inputs and Outputs ... 12
I²C Programming and Digital Control ... 14
Registers ... 15
Register Descriptions ... 16
Applications Information ... 21
Applications Overview ... 21
Keypad Current ... 21
Outline Dimensions ... 23
Ordering Guide ... 23

REVISION HISTORY

10/2019—Rev. D to Rev. E

Changes to Table 16 ... 16
Updated Outline Dimensions ... 23
Changes to Ordering Guide ... 23

1/2012—Rev. C to Rev. D

Changes to Table 11 ... 9
Changes to Table 25 ... 18

7/2011—Rev. B to Rev. C

Changes to Features and General Description, I²C Address Options ... 1
Changes to the I²C Programming and Digital Control Section, Figure 16, Figure, 17, and Figure 18 ... 14
Changes to Ordering Guide ... 23

5/2010—Rev. A to Rev. B

Changes to Features ... 1
Changes to Table 1 ... 3
Changes to Table 8 ... 6

3/2010—Rev. 0 to Rev. A

Added WLCSP Information ... Throughout
Added Typical Performance Characteristics Section ... 7
Updated Outline Dimensions, Changes to Ordering Guide ... 23

12/2009—Revision 0: Initial Version

SPECIFICATIONS

$T_A = T_J = -40°C$ to $+85°C$, unless otherwise noted.

DC CHARACTERISTICS

Table 1. General DC Electrical Characteristics

Parameter	Symbol	Conditions	Min	Typ	Max	Unit
SUPPLY VOLTAGE						
V_{CC} Input Voltage Range	V_{CC}		1.65		3.6	V
Supply Current[1]	I_{CC}	V_{CC} = 1.8 V to 3.0 V, T_A = −40°C to +85°C		1	10	µA
With One Key Press	I_{CC}	V_{CC} = 1.8 V, T_A = −40°C to +85°C		55	90	µA
	I_{CC}	V_{CC} = 3.0 V, T_A = −40°C to +85°C		100	200	µA
With GPI Low (Pull-Up Enabled)[2]	I_{CC}	V_{CC} = 1.8 V to 3.0 V, T_A = −40°C to +85°C		20	50	µA
With GPI Low (Pull-Up Disabled)	I_{CC}	V_{CC} = 1.8 V to 3.0 V, T_A = −40°C to +85°C		2	10	µA
With One GPO Active[3]	I_{CC}	V_{CC} = 1.8 V, T_A = −40°C to +85°C			50	µA
OSCILLATOR CURRENT						
Oscillator Current (Enabled)	I_{CC}	V_{CC} = 1.8 V to 3.0 V		40		µA

[1] Operating current measured with I/Os defaulting as GPIs, with all pull-ups enabled and all inputs open.
[2] With one GPI low.
[3] Load = 100 kΩ.

Table 2. I/O DC Electrical Characteristics

Parameter	Symbol	Conditions	Min	Typ	Max	Unit
INPUT LOGIC LEVELS (SCL, SDA, $\overline{RST}$, C0 to C9, R0 to R7)[1]						
Logic Low Input Voltage	V_{IL}	1.8 V ≤ V_{IO} ≤ 3.0 V			0.3 × V_{CC}	V
Logic High Input Voltage	V_{IH}	1.8 V ≤ V_{IO} ≤ 3.0 V	0.7 × V_{CC}			V
Schmitt Trigger Hysteresis	V_{HYST}			0.10		V
Input Leakage Current	$V_{I-LEAKAGE}$	1.8 V ≤ V_{IO} ≤ 3.0 V	−1		+1	µA
OUTPUT LOGIC LEVELS (C0 to C9, R0 to R7)						
Logic Low Output Voltage	V_{OL}	I_{SINK} = 1 mA			0.40	V
Output High Voltage	V_{OH}	I_{SOURCE} = 1 mA		V_{CC} − 0.3 V		V
OUTPUT LOGIC LEVELS ($\overline{INT}$, SDA)						
Output Low Voltage	V_{OL}	I_{SINK} = 3 mA, 1.8 V ≤ V_{CC} ≤ 3.0 V			0.40	V
Output High Voltage	V_{OH}	1.8 V ≤ V_{CC} ≤ 3.0 V	0.7 × V_{CC}			V
Logic High Leakage Current	$V_{O-LEAKAGE}$	1.8 V ≤ V_{CC} ≤ 3.0 V		0.1	1	µA
PULL-UP RESISTANCE FOR GPIOs (C0 to C9, R0 to R7)[2]	$R_{PULL-UP}$			100		kΩ

[1] Power-up default current. All I/Os default to GPIs and are open; C8 and C9 default to GPIs; I²C is idle.
[2] GPIO internal pull-ups are approximately 100 kΩ.

Table 3. Capacitance Loading[1]

Parameter	Symbol	Min	Typ	Max	Unit
I/O Input Capacitance	C_{IN}		1	10	pF
I/O Output Loading Capacitance	C_{OUT}			50	pF
Capacitive Load for Each Bus Line	C_B[2]			400	pF

[1] Guaranteed by design.
[2] C_B = total capacitance of one bus line in picofarads.

AC CHARACTERISTICS

Table 4. General AC Characteristics[1]

Parameter	Symbol	Min	Typ	Max	Unit
Delay from Reset Deassertion to I²C Access	R_{STD}	60			µs
Keypad Unlock Timer	T_{KUT}		7		sec
Keypad Interrupt Mask Timer	T_{KIMT}		31		sec
Debounce	T_D		275		µs

[1] Guaranteed by design.

Table 5. I²C AC Electrical Characteristics[1]

Parameter	Symbol	Min	Typ	Max	Unit
SCL Clock Frequency	f_{SCL}			400	kHz
SCL High Time	t_{HIGH}	0.6			µs
SCL Low Time	t_{LOW}	1.3			µs
Data Setup Time	$t_{SU, DAT}$	100			ns
Data Hold Time	$t_{HD, DAT}$	0		0.9	µs
Setup Time for Repeated Start	$t_{SU, STA}$	0.6			µs
Hold Time for Start/Repeated Start	$t_{HD, STA}$	0.6			µs
Bus Free Time for Stop and Start	t_{BUF}	1.3			µs
Setup Time for Stop Condition	$t_{SU, STO}$	0.6			µs
Rise Time for SCL and SDA[2]	t_R	20 + 0.1 C_B		300	ns
Fall Time for SCL and SDA[2]	t_F	20 + 0.1 C_B		300	ns
Pulse Width of Suppressed Spike	t_{SP}	0		50	µs

[1] Guaranteed by design.
[2] t_R and t_F are measured between 0.3 × V_{CC} and 0.7 × V_{CC}.

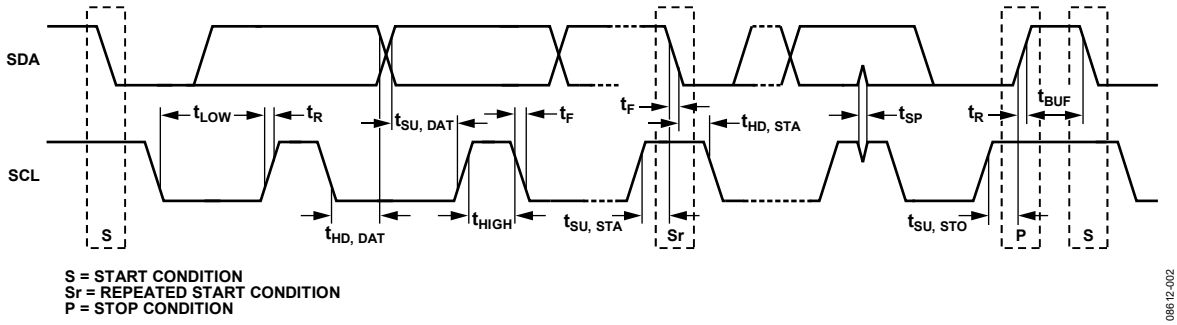

Figure 2. I²C Interface Timing Diagram

ABSOLUTE MAXIMUM RATINGS

Table 6.

Parameter	Rating
V_{CC}	−0.3 V to + 4.0 V
R0 to R7, C0 to C9	−0.3 V to V_{CC} + 0.3 V
SCL	−0.3 V to V_{CC} + 0.3 V
SDA	−0.3 V to V_{CC} + 0.3 V
$\overline{RST}$	−0.3 V to V_{CC} + 0.3 V
$\overline{INT}$	−0.3 V to V_{CC} + 0.3 V
GND	−0.3 V to +0.3 V
Operating Ambient Temperature Range	−40°C to +85°C
Operating Junction Temperature Range	−40°C to +125°C
Storage Temperature Range	−65°C to +150°C
ESD Machine Model	±200 V
ESD Human Body Model	±2000 V
ESD Charged Device Model	±1000 V
Soldering Condition	JEDEC J-STD-020

Stresses at or above those listed under Absolute Maximum Ratings may cause permanent damage to the product. This is a stress rating only; functional operation of the product at these or any other conditions above those indicated in the operational section of this specification is not implied. Operation beyond the maximum operating conditions for extended periods may affect product reliability.

THERMAL RESISTANCE

θ_{JA} is specified for the worst-case conditions, that is, a device soldered in a circuit board for surface-mount packages.

Table 7. Thermal Resistance

Package Type	θ_{JA}	θ_{JC}	Unit
24-Lead LFCSP_WQ	57.8	9.4	°C/W
Maximum Power	600	N/A	mW
25-Ball WLCSP	46	N/A	°C/W
Maximum Power	600	N/A	mW

ESD CAUTION



ESD (electrostatic discharge) sensitive device. Charged devices and circuit boards can discharge without detection. Although this product features patented or proprietary protection circuitry, damage may occur on devices subjected to high energy ESD. Therefore, proper ESD precautions should be taken to avoid performance degradation or loss of functionality.

PIN CONFIGURATIONS AND FUNCTION DESCRIPTIONS

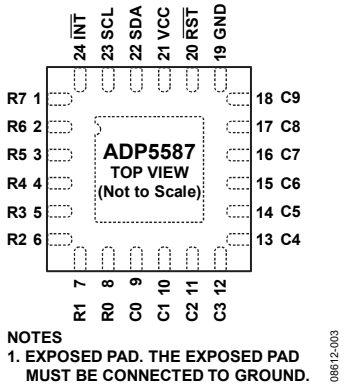

Figure 3. LFCSP Pin Configuration

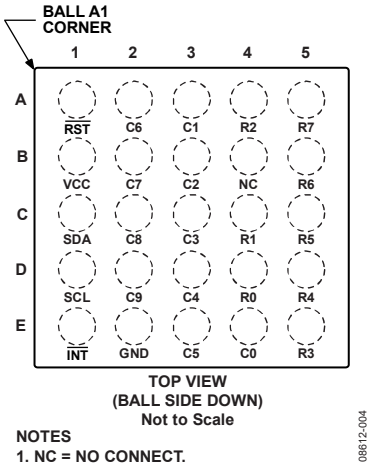

Figure 4. WLCSP Pin Configuration

Table 8. Pin Function Descriptions

LFCSP Pin No.	WLCSP Pin No.	Mnemonic	Description
1	A5	R7	GPIO, Row 7 in the Keypad Matrix.
2	B5	R6	GPIO, Row 6 in the Keypad Matrix.
3	C5	R5	GPIO, Row 5 in the Keypad Matrix.
4	D5	R4	GPIO, Row 4 in the Keypad Matrix.
5	E5	R3	GPIO, Row 3 in the Keypad Matrix.
6	A4	R2	GPIO, Row 2 in the Keypad Matrix.
N/A	B4	N/A	No Connect (NC)
7	C4	R1	GPIO, Row 1 in the Keypad Matrix.
8	D4	R0	GPIO, Row 0 in the Keypad Matrix.
9	E4	C0	GPIO, Column 0 in the Keypad Matrix.
10	A3	C1	GPIO, Column 1 in the Keypad Matrix.
11	B3	C2	GPIO, Column 2 in the Keypad Matrix.
12	C3	C3	GPIO, Column 3 in the Keypad Matrix.
13	D3	C4	GPIO, Column 4 in the Keypad Matrix.
14	E3	C5	GPIO, Column 5 in the Keypad Matrix.
15	A2	C6	GPIO, Column 6 in the Keypad Matrix.
16	B2	C7	GPIO, Column 7 in the Keypad Matrix.
17	C2	C8	GPIO, Column 8 in the Keypad Matrix.
18	D2	C9	GPIO, Column 9 in the Keypad Matrix.
19	E2	GND	Ground.
20	A1	$\overline{RST}$	Hardware Reset (Active Low). This pin resets the device to the power default conditions. The reset pin must be driven low for a minimum of 50 µs to be valid and to prevent false resets due to ESD glitches or noise in the system. If not used, $\overline{RST}$ must be tied high with a pull-up resistor.
21	B1	V_{CC}	Supply Voltage, 1.65 V to 3.6 V.
22	C1	SDA	I^2C Serial Data. The open drain requires an external pull-up resistor.
23	D1	SCL	I^2C Clock.
24	E1	$\overline{INT}$	Processor Interrupt, Active Low, Open Drain. This pin can be pulled up to 2.7 V or 1.8 V for selection flexibility in the processor GPIO supply group.
EP	N/A	EPAD	Exposed Pad. The exposed pad must be connected to ground.

TYPICAL PERFORMANCE CHARACTERISTICS

T_A = 25°C, unless otherwise specified.

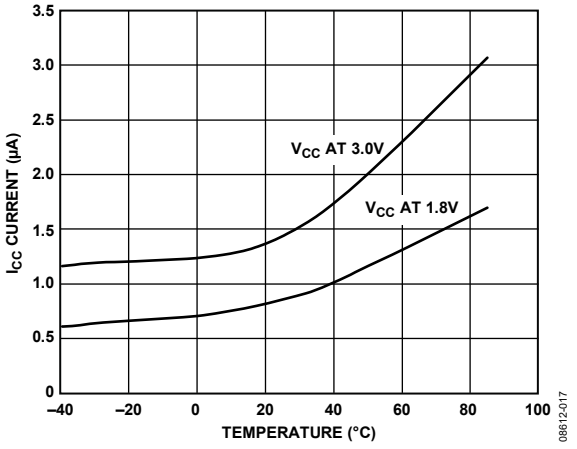

Figure 5. Standby (I_{CC}) Current vs. Temperature

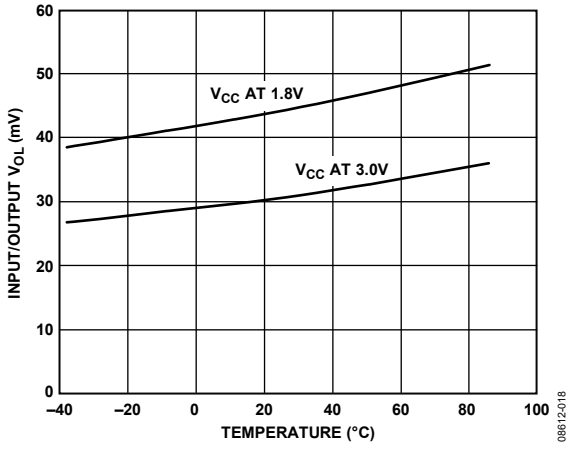

Figure 7. Input/Output V_{OL} vs. Temperature (Sink Current = 1 mA)

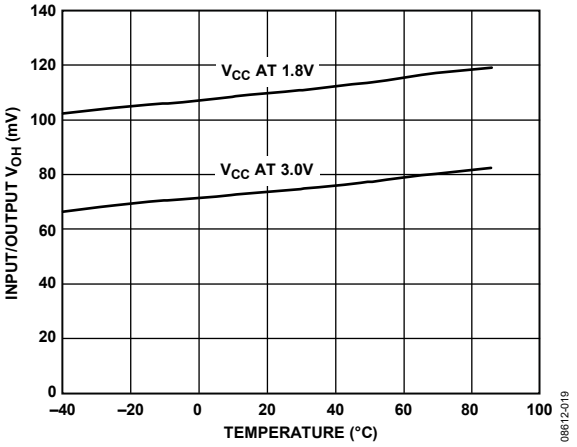

Figure 6. Input/Output V_{OH} vs. Temperature (Source Current = 1 mA)

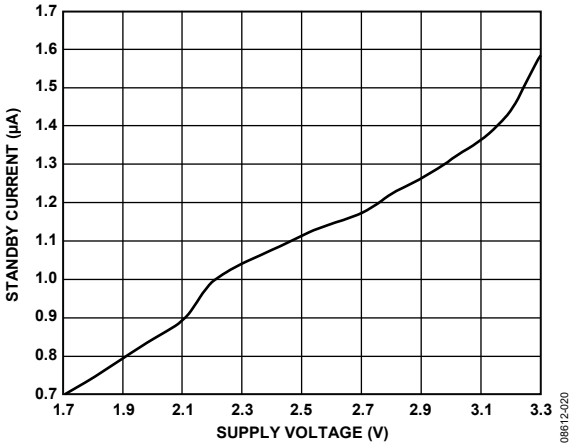

Figure 8. Supply Voltage vs. Standby Current

THEORY OF OPERATION

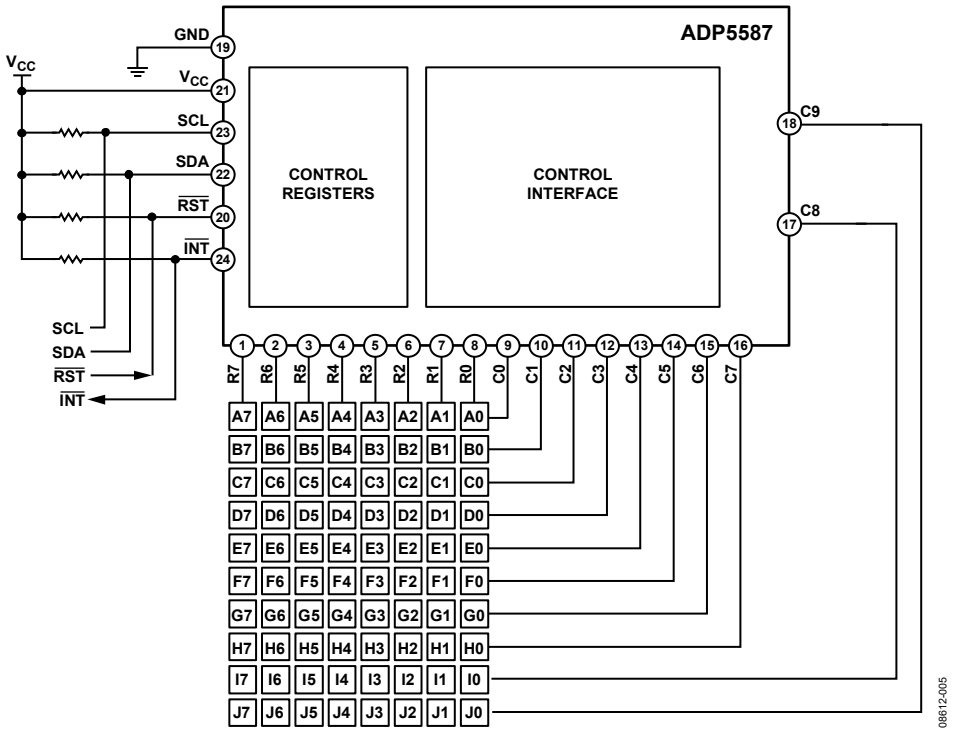

Figure 9. Typical Operating Circuit

The ADP5587 is a GPIO expander that can be configured either as an 18 I/O port expander or as a 10 column × 8 row keypad matrix (80 keys maximum). It is ideal for cellular phone designs and other portable devices that require a large extended keypad and/or expanded I/Os. When smaller size keypads are required, unused GPIOs in the keypad matrix can be used as I/Os (GPOs and GPIs). All GPIOs (rows and columns) default to GPIs at power-up with pull-ups and debounce enabled.

KEYPAD OPERATION

Any number of rows and columns, up to 10 columns × 8 rows, can be configured to be part of the keypad matrix. The rows and columns that make up the keypad matrix must be configured by setting the corresponding bits in Register 0x1D to Register 0x1F. Key presses and releases appear in the key event table/registers with a decimal value of 1 (0x01 hexadecimal or 0000001 binary) through a decimal value of 80 (0x50 hexadecimal or 1010000 binary). See Table 9 for key event number assignments. The keypad, in idle mode, is configured with columns driven low and rows as inputs configured high with pull-up resistors.

Table 9. Key Event Number Assignment Table

Row	C0	C1	C2	C3	C4	C5	C6	C7	C8	C9
R0	1	2	3	4	5	6	7	8	9	10
R1	11	12	13	14	15	16	17	18	19	20
R2	21	22	23	24	25	26	27	28	29	30
R3	31	32	33	34	35	36	37	38	39	40
R4	41	42	43	44	45	46	47	48	49	50
R5	51	52	53	54	55	56	57	58	59	60
R6	61	62	63	64	65	66	67	68	69	70
R7	71	72	73	74	75	76	77	78	79	80

When one key press or multiple key presses (short between column and row) occur, the internal state machine checks the row pins to determine which one is driven low and then triggers an internal interrupt. The state machine then starts a key scan cycle to determine which columns are involved in the key press. After a key has been pressed for 25 ms, the state machine sets the appropriate key number in the key event status register with the key-pressed bits set (the MSB in the key event register) in the order detected. The state machine then sets the KE_INT bit in Register 0x02. If the KE_IEN field in Register 0x01 is set, an interrupt is sent to the host processor.

To prevent glitches or narrow press times registering as valid key presses, the key scanner requires the key to be pressed for two scan cycles. The key scanner has a sampling period of 25 ms; therefore, the key must be pressed and held for at least 25 ms to register as pressed. If the key is continuously pressed, the key scanner continues to sample every 25 ms. If a pressed key is released for 25 ms or greater, the state machine sets the appropriate key number in the key event status register with the key-pressed bits cleared in the order detected. Because the release of a key is not necessarily in sync with the key scan sampling period, it may take between 25 ms and 50 ms for a key to register as released. After the key is registered as released, the key scanner returns to idle mode. Figure 10 shows the row and column pins connected to a typical 10 × 8, 80-switch keypad matrix.

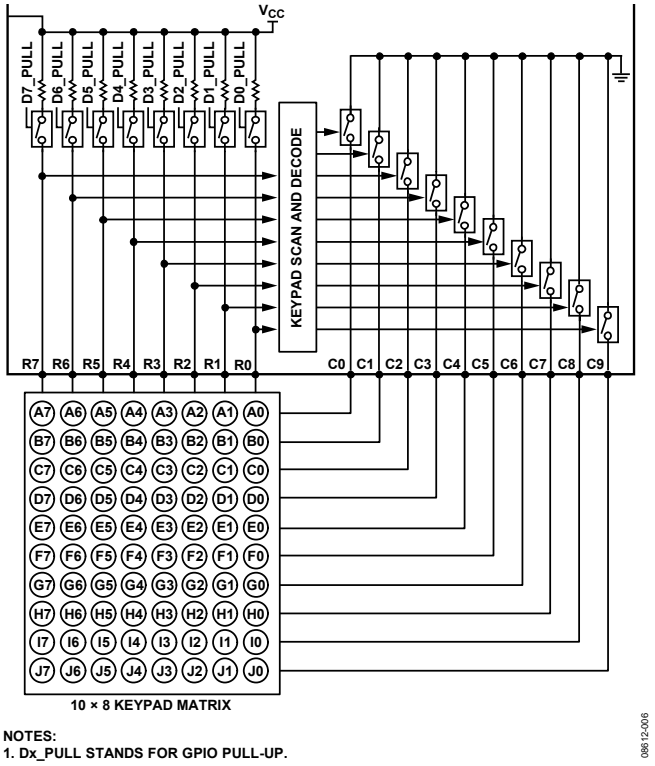

Figure 10. Keypad Decode Configuration

Key Event Tracking

The 10 key event registers are set to act as a FIFO, meaning that reading any of the 10 key event registers yields the key events in the order the keys were pressed and released.

Tracking of key events is done with the help of the key event counter (the KEC field in Register 0x03) and the FIFO/key event registers (Register 0x04 through Register 0x0D). The KEC count increases as keys are pressed and released; up to 10 events can be logged in the counter. The FIFO/key event registers, on the other hand, display the key events and their status (pressed or released) as they are read out of the FIFO. The FIFO registers contain eight bits, with the MSB dedicated as the status bit (1 indicates a press and 0 indicates a release); the remaining seven bits display the binary representation of the keys that are pressed or released.

The first read of any of the FIFO registers displays the first event that happened and its status. Subsequent reads of the same register replace the register data with the next event that happens. If tracking of all the events is important, it is best to use a single register per event. After all the events in the FIFO are read, reading of any of the event registers yields a zero value.

Table 10 and Table 11 show the event sequences as they are logged in and read from the FIFO. The 10 FIFO registers are labeled A through J, and the keys are labeled A0 through J7.

Table 10. Example of Event Sequence

Key Pressed/Released	Status	Key Event Counter
A0	Pressed	1
B1	Pressed	2
A0	Released	3
C2	Pressed	4
B1	Released	5
D3	Pressed	6
C2	Released	7
E4	Pressed	8
E4	Released	9
D3	Released	10

Table 11. Interpretation of FIFO Event Reading

Key Event Counter	Key Event Register Read	Key Event Register Content (Binary)[1]	Key Event Register Interpretation
10	N/A	N/A	N/A
9	D	1 0000001	Key A0 pressed
8	E	1 0001100	Key B1 pressed
7	C	0 0000001	Key A0 released
6	F	1 0010111	Key C2 pressed
5	G	0 0001100	Key B1 released
4	A	1 0100010	Key D3 pressed
3	B	0 0010111	Key C2 released
2	H	1 0101101	Key E4 pressed
1	J	0 0101101	Key E4 released
0	I	0 0100010	Key D3 released

[1] The MSB indicates a key press or key release in the key event register: 1 = key press; 0 = key release.

Key Event Overflow

The ADP5587 is equipped with an overflow feature to handle key events beyond the FIFO capacity. When all events are filled, any additional events set the OVR_FLOW_INT bit in Register 0x02; if the OVR_FLOW_IEN bit in Register 0x01 is set, the host processor is also interrupted when overflow occurs. When the FIFO is not full, new events are added as the last events.

The OVR_FLOW_M bit in Register 0x01 sets the mode of operation during overflows. Clearing the OVR_FLOW_M bit causes new incoming events to be discarded, and setting this bit rolls over and overwrites old data with new data starting at the first event.

Auto-Increment

The ADP5587 features automatic increment during I²C read access, which allows the user to increment the address pointer without the need to send a read command for subsequent addresses. This minimizes processor intervention and, therefore, saves processor bandwidth and current drain. Bit 7 of Register 0x01 must be set to initiate auto-increment (see Figure 17 for the full write and read sequence).

Key Event Interrupt

On a key event (KE) interrupt, the processor reads the interrupt status register to determine the cause of the interrupt. If the KE_INT bit in Register 0x02 is set, the processor reads the key event count from the KEC [3:0] field in Register 0x03 to determine the number of events. After reading all the events from the FIFO, it then reads the KEC field again (in Register 0x03) to make sure that no new events have come in. After all the events are read, the KEC field is decremented to zero (KEC = 0), and the KE_INT bit can be cleared by writing a 1 to it. Both key presses and key releases are capable of generating key event interrupts. The KE_INT bit cannot be cleared, and the $\overline{\text{INT}}$ pin cannot be deasserted, until the FIFO is cleared of all events.

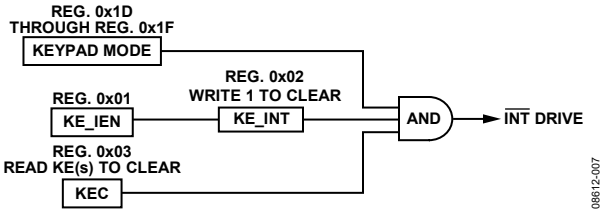

Figure 11. Key Event Interrupt Generation

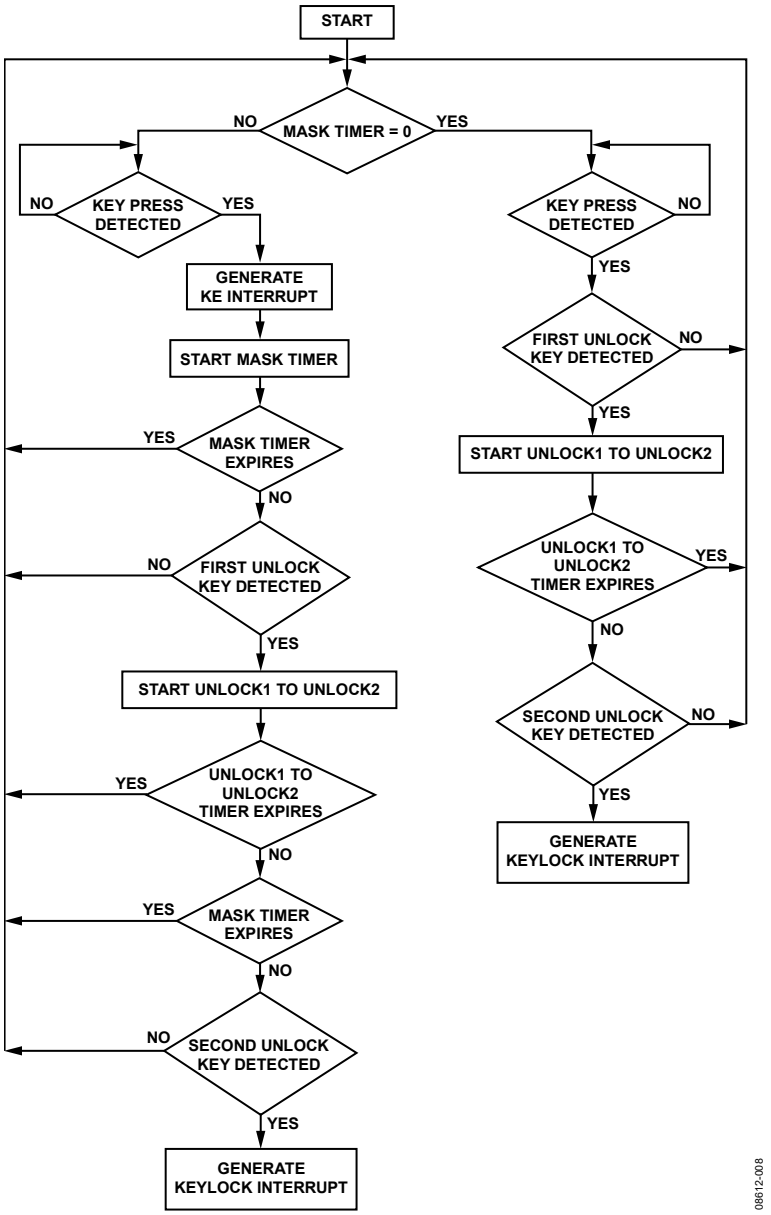

Figure 12. Keypad Lock Interrupt Mask Timer Flowchart

Keypad Lock/Unlock Feature

The ADP5587 has a locking feature that allows the user to lock the keypad or GPIs (configured to be part of the event table). When enabled, the keypad lock can prevent generation of key event interrupts and prevent key events from being recorded in the key event table. This feature comprises the Unlock Key 1 and Unlock Key 2 registers (Register 0x0F and Register 0x10, respectively), the keypad lock interrupt mask and keypad unlock timers (Register 0x0E), and the LCK1, LCK2, and keylock enable (K_LCK_EN) bits (Register 0x03).

The unlock keys can be programmed with any value of the keys in the keypad matrix or any GPI event values that are part of the key event table. When the keypad lock interrupt mask timer is enabled, the user must press two specific keys before a keylock interrupt is generated or keypad events are recorded. After the keypad is locked (set Bit 6, Register 0x03, to enable the lock), the first time that the user presses any key, a key event interrupt is generated. No additional interrupt is generated unless both unlock key sequences are correct.

If the correct unlock keys are not pressed before the mask timer expires, the state machine starts over. The first key event interrupt is generated to allow the software to see that the user has pressed a key so that the host can turn on the LCD and display the unlock message. The host then reads the lock status register to see if the keypad is unlocked. After the first key event interrupt, the state machine does not interrupt the processor again unless the correct sequence is keyed. The state machine is reset if the correct sequences are not keyed before the keypad lock interrupt mask timer expires.

The state of the keypad lock interrupt mask bit (Register 0x01, Bit 2) in the configuration register determines whether the interrupt pin is asserted when the keylock interrupt status bit (Register 0x02, Bit 2) is set. Setting the keylock interrupt mask bit causes the $\overline{\text{INT}}$ pin to be asserted when the keylock interrupt status bit is set in Register 0x02; clearing that bit masks the interrupt, causing the interrupt pin not to respond to the keylock interrupt status bit. The mask interrupt timer should be set for the time that it takes for the LCD to dim or turn off so that, if a key is pressed, the backlight is set to bright mode again or reset to turn on the LCD.

When the unlock mask interrupt timer equals 0, only the correct unlock sequence can generate an interrupt. Disabling the unlock mask interrupt timer allows the processor to remain undisturbed for situations in which the user, for example, has the phone in a pocket or purse and the keys are constantly pressed. The flowchart in Figure 11 shows the interaction of interrupt enable, key event counter, key event interrupt status, and interrupt generation.

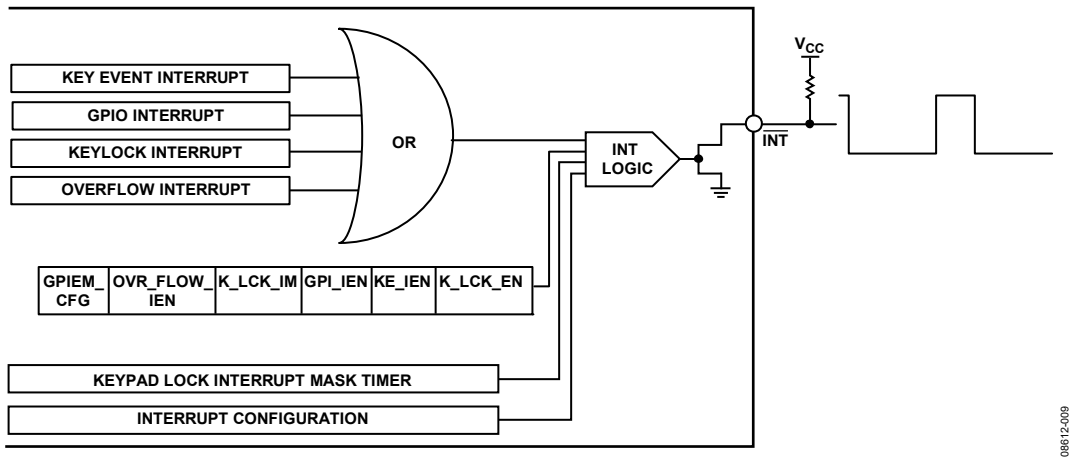

Figure 13. $\overline{\text{INT}}$ Pin Drive

GENERAL-PURPOSE INPUTS AND OUTPUTS

The ADP5587 supports up to 18 programmable GPIOs that can be configured to address a variety of uses. Figure 14 shows the makeup of a typical GPIO block where GPIOx represents any of the 18 I/O lines.

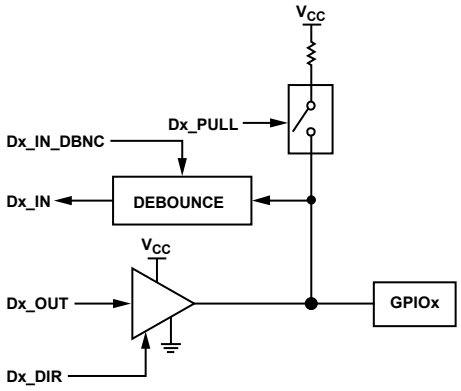

Figure 14. Typical GPIO Block

General-Purpose Inputs (GPI)

The ADP5587 allows the user to configure all or some of its GPIOs as general-purpose inputs (GPIs). After the GPIOs are configured as GPIs, the user can choose to also turn on pull-up resistors and interrupt generation capability, thus reducing the amount of software monitoring and processor interaction and saving power.

The programmed level of the GPI interrupt determines the active level of the GPI pin. For example, if a GPI interrupt level is programmed as high, a high on that pin is considered active and meets the interrupt requirement. If the interrupt is programmed as low, a low on that pin is considered active and meets the interrupt requirement.

GPI data status and interrupt status are reflected in the GPIO interrupt status and data status registers (Register 0x11 through Register 0x16). Caution is necessary during software implementation because an interrupt may be set immediately after the registers are set. To prevent this, the correct logic levels must be present at the GPIs, and the GPIO interrupt level must be set before GPIO interrupt enable or GPI event FIFO enable registers are set. Figure 15 shows the interrupt generation scheme, where Dx represents any one of the 18 GPIOs.

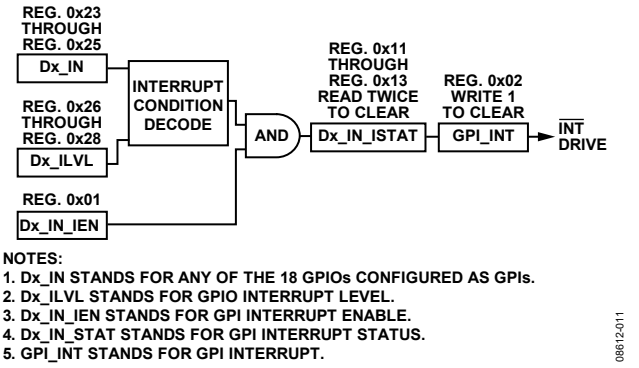

Figure 15. GPIO Interrupt Generation

GPI Events

A column or row configured as a GPI can be programmed to be part of the key event table and is, therefore, also capable of generating a key event interrupt. A key event interrupt caused by a GPI follows the same process flow as a key event interrupt caused by a key press or key release. GPIs configured as part of the key event table allow single key switches and other GPI interrupts to be monitored. As part of the event table, GPIs are represented by a decimal value of 97 (0x61 hexadecimal or 1100001 binary) through a decimal value of 114 (0x72 hexadecimal or 1110010 binary). See Table 12 and Table 13 for GPI event number assignments for rows and columns, respectively.

Table 12. GPI Event Number Assignments for Rows

R0	R1	R2	R3	R4	R5	R6	R7
97	98	99	100	101	102	103	104

Table 13. GPI Event Number Assignments for Columns

C0	C1	C2	C3	C4	C5	C6	C7	C8	C9
105	106	107	108	109	110	111	112	113	114

For a GPI that is set as active high and is enabled in the key event table, the state machine adds an event to the event count and event tables whenever that GPI goes high. If the GPI is set to active low, a transition from high to low is considered a press and is also added to the event count and event table. After the interrupt state is met, the state machine internally sets an interrupt for the opposite state programmed in the register to prevent polling for the released state, thereby saving current. After the released state is achieved, it is added to the event table. The press and release are still indicated by Bit 7 in the event register (Register 0x04 through Register 0x0D). The GPI events can also be used as unlocked sequences.

When the GPI_EM_REGx bit in Register 0x20 through Register 0x22 is set, GPI events are not tracked when the keypad is locked. The GPIEM_CFG bit (Register 0x01, Bit 6) must be cleared for the GPI events to be tracked in the event counter and event table when the keypad is locked.

275 Microsecond Interrupt Configuration

The ADP5587 gives the user the flexibility of deasserting the interrupt for 275 µs while there is a pending event. When the INT_CFG bit in Register 0x01 is set, any attempt to clear the interrupt bit while the interrupt pin is already asserted results in a 275 µs deassertion. When the INT_CFG bit is cleared, the processor interrupt remains asserted if the host tries to clear the interrupt. This feature is particularly useful for software development and edge triggering applications.

Debouncing

The ADP5587 has a 275 µs debounce time for GPIOs configured as GPIs and rows in keypad scanning mode. The reset line always has a 275 µs debounce time.

General-Purpose Outputs (GPOs)

The ADP5587 allows the user to configure all or some of its GPIOs as GPOs. These GPOs can be used as extra enables for the host processor or simply as trigger outputs. When configured as an output (GPO), a digital buffer drives the pin to 0 V for a 0 and to V_{CC} for a 1. To set any GPIO as a GPO, make sure that the corresponding bits in Register 0x1D through Register 0x1F are set for GPIO mode; then use Register 0x23 through Register 0x25 to set the corresponding bits for GPO mode.

Power-On Reset

For built-in power-up initialization for applications lacking a power-on reset signal, a reset pin, $\overline{RST}$, allows the user to reset the registers to default values in the event of a brownout or other reset condition.

Table 14. Device Configuration

Keypad			GPIO	
Matrix	**Active Pins**	**Number of Keys**	**Available GPIO**	**Number of GPIOs**
10 × 8	C0 to C9, R0 to R7	80	0	0
8 × 8	C0 to C7, R0 to R7	64	C8, C9	2
8 × 7	C0 to C7, R0 to R6	56	R7, C8, C9	3
8 × 6	C0 to C7, R0 to R5	48	R6, R7, C8, C9	4
8 × 5	C0 to C7, R0 to R4	40	R5 to R7, C8, C9	5
7 × 7	C0 to C6, R0 to R6	49	R7, C7 to C9	4
7 × 6	C0 to C6, R0 to R5	42	R6, R7, C7 to C9	5
7 × 5	C0 to C6, R0 to R4	35	R5 to R7, C7 to C9	6
6 × 6	C0 to C5, R0 to R5	36	R6, R7, C6 to C9	6
6 × 5	C0 to C5, R0 to R4	30	R5 to R7, C6 to C9	7
6 × 4	C0 to C5, R0 to R3	24	R4 to R7, C6 to C9	8
…	…	…	…	…
0 × 0	None	0	R0 to R7, C0 to C9	18

I²C PROGRAMMING AND DIGITAL CONTROL

The ADP5587 provides full I²C software programmability to facilitate its adoption in various product architectures. All register programming is done via the I²C bus. The LFCSP package has two options for I²C addressing.

The default part option I²C write address is located at 0x68 (0b01101000), and the read address is at 0x69 (0b 01101001).

The ADP5587ACPZ-1-R7 has the I²C write address at 0x60 (0b 01100000) and the read address at 0x61 (0b 01100001).

All communication to the ADP5587 is performed via its I²C-compatible serial interface. Figure 16 shows a typical write sequence for programming an internal register. The cycle begins with a start condition followed by the chip write address. The ADP5587 acknowledges the chip write address byte by pulling the data line low. The address of the register to which data is to be written is sent next. The ADP5587 acknowledges the register address byte by pulling the data line low. The data byte to be written is sent next. The ADP5587 acknowledges the data byte by pulling the data line low, and a stop condition completes the sequence.

Figure 17 shows a typical read sequence for reading back an internal register. The cycle begins with a start condition followed by the chip write address. The ADP5587 acknowledges the chip write address byte by pulling the data line low. The address of the register from which data is to be read is sent next. The ADP5587 acknowledges the register address byte by pulling the data line low. The cycle continues with a repeat start followed by the chip read address. The ADP5587 acknowledges the chip read address byte by pulling the data line low. The ADP5587 places the contents of the previously addressed register on the bus for readback. There is no acknowledge following the readback data byte, and a stop condition completes the cycle.

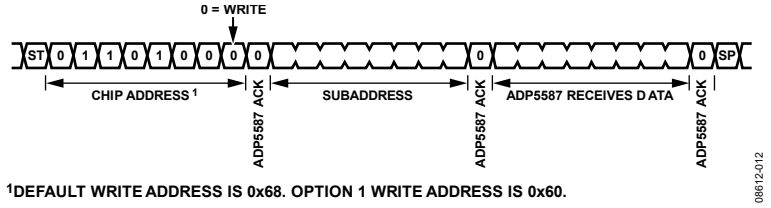

Figure 16. I²C Write Sequence

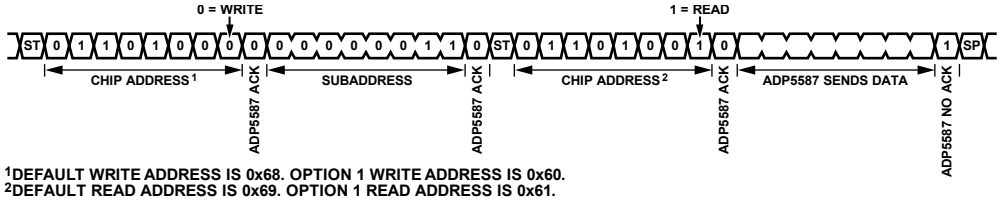

Figure 17. I²C Read and Write Sequences

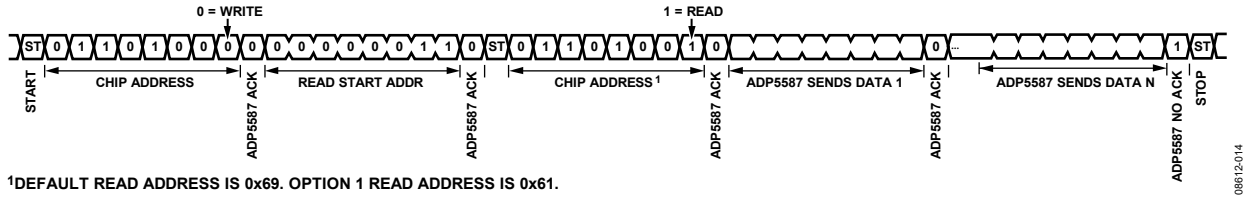

Figure 18. I²C Read Auto-Increment

REGISTERS

The general behavior of registers is as follows:

- All registers are 0 on reset.
- All registers are read/write unless otherwise specified.
- Unused bits are read as 0.
- Interrupt bits are cleared by writing 1 to the flag; writing 0 or reading the flag has no effect, with the exception of the key press, key release, and GPIO interrupt status registers, which are cleared on a read.

Table 15.

Address	Register Name	Description
0x00	DEV_ID	Device ID
0x01	CFG	Configuration Register 1
0x02	INT_STAT	Interrupt status register
0x03	KEY_LCK_EC_STAT	Keylock and event counter register
0x04	KEY_EVENTA	Key Event Register A
0x05	KEY_EVENTB	Key Event Register B
0x06	KEY_EVENTC	Key Event Register C
0x07	KEY_EVENTD	Key Event Register D
0x08	KEY_EVENTE	Key Event Register E
0x09	KEY_EVENTF	Key Event Register F
0x0A	KEY_EVENTG	Key Event Register G
0x0B	KEY_EVENTH	Key Event Register H
0x0C	KEY_EVENTI	Key Event Register I
0x0D	KEY_EVENTJ	Key Event Register J
0x0E	KP_LCK_TMR	Keypad Unlock 1 timer to Keypad Unlock 2 timer
0x0F	UNLOCK1	Unlock Key 1
0x10	UNLOCK2	Unlock Key 2
0x11	GPIO_INT_STAT1	GPIO interrupt status
0x12	GPIO_INT_STAT2	GPIO interrupt status
0x13	GPIO_INT_STAT3	GPIO interrupt status
0x14	GPIO_DAT_STAT1	GPIO data status, read twice to clear
0x15	GPIO_DAT_STAT2	GPIO data status, read twice to clear
0x16	GPIO_DAT_STAT3	GPIO data status, read twice to clear
0x17	GPIO_DAT_OUT1	GPIO data out
0x18	GPIO_DAT_OUT2	GPIO data out
0x19	GPIO_DAT_OUT3	GPIO data out
0x1A	GPIO_INT_EN1	GPIO interrupt enable
0x1B	GPIO_INT_EN2	GPIO interrupt enable
0x1C	GPIO_INT_EN3	GPIO interrupt enable
0x1D	KP_GPIO1	Keypad or GPIO selection
0x1E	KP_GPIO2	Keypad or GPIO selection
0x1F	KP_GPIO3	Keypad or GPIO selection
0x20	GPI_EM_REG1	GPI Event Mode 1
0x21	GPI_EM_REG2	GPI Event Mode 2
0x22	GPI_EM_REG3	GPI Event Mode 3
0x23	GPIO_DIR1	GPIO data direction
0x24	GPIO_DIR2	GPIO data direction
0x25	GPIO_DIR3	GPIO data direction
0x26	GPIO_INT_LVL1	GPIO level detect
0x27	GPIO_INT_LVL2	GPIO level detect
0x28	GPIO_INT_LVL3	GPIO level detect
0x29	DEBOUNCE_DIS1	Debounce disable

Address	Register Name	Description
0x2A	DEBOUNCE_DIS2	Debounce disable
0x2B	DEBOUNCE_DIS3	Debounce disable
0x2C	GPIO_PULL1	GPIO pull disable
0x2D	GPIO_PULL2	GPIO pull disable
0x2E	GPIO_PULL3	GPIO pull disable

REGISTER DESCRIPTIONS

Table 16. DEV_ID—Register 0x00 (Device ID)

Default: 0000 XXXX (where X = don't care).

Register Name	Register Description	Bit 7	Bit 6	Bit 5	Bit 4	Bit 3	Bit 2	Bit 1	Bit 0
DEV_ID	Device ID[3:0], MFG ID[7:4]	MFID3	MFID2	MFID1	MFID0	DID3	DID2	DID1	DID0

Table 17. CFG—Register 0x01 (Configuration Register 1)

Field	Bits	Description
AUTO_INC	7	I^2C auto-increment. Burst read is supported; burst write is not supported. 1: I^2C auto-increment is on. 0: I^2C auto-increment is off.
GPIEM_CFG	6	GPI event mode configuration. 1: GPI events are not tracked when the keypad is locked. 0: GPI events are tracked when the keypad is locked.
OVR_FLOW_M	5	Overflow mode. 1: overflow mode is on; register overflow data shifts in, starting at the last event and losing first event data. 0: overflow mode is off; register overflow data is lost.
INT_CFG	4	Interrupt configuration. 1: processor interrupt is deasserted for 275 µs and is reasserted with pending key events. 0: processor interrupt remains asserted when host tries to clear interrupt while there is a pending key event.
OVR_FLOW_IEN	3	Overflow interrupt enable. 1: overflow interrupt is enabled. 0: overflow interrupt is disabled.
K_LCK_IM	2	Keypad lock interrupt mask. 1: keypad lock interrupt is enabled. 0: keypad lock interrupt is disabled.
GPI_IEN	1	GPI interrupt enable. 1: GPI interrupt is enabled. 0: GPI interrupt is disabled.
KE_IEN	0	Key events interrupt enable. 1: key events interrupt is enabled. 0: key events interrupt is disabled.

Table 18. INT_STAT—Register 0x02 (Interrupt Status Register)

Field	Bits	Description
Not Used	[7:4]	N/A
OVR_FLOW_INT[1]	3	Overflow interrupt status. When set, write 1 to clear. 1: overflow interrupt is detected. 0: overflow interrupt is not detected.
K_LCK_INT[2]	2	Keylock interrupt status. When set, write 1 to clear. 1: keylock interrupt is detected. 0: keylock interrupt is not detected.
GPI_INT[1, 3]	1	GPI interrupt status. When set, write 1 to clear. 1: GPI interrupt is detected. 0: GPI interrupt is not detected.
KE_INT[1, 3]	0	Key events interrupt status. When set, write 1 to clear. 1: key events interrupt is detected. 0: key events interrupt is not detected.

[1] The KE_INT, GPI_INT, and OVR_FLOW_INT bits reflect the status of the interrupts when the interrupt types are enabled even if the processor interrupt is masked.
[2] The K_LCK_INT bit is the interrupt to the processor when the keypad lock sequence is triggered.
[3] If there is a pending key event or GPI interrupt in their respective registers, KE_INT is not cleared until the FIFO is empty, and GPI_INT is not cleared until the cause of the interrupt is resolved. The host must write a 1 to the KE_INT and GPI_INT bits to clear them.

Table 19. KEY_LCK_EC_STAT—Register 0x03 (Keylock and Event Counter Register)

Field	Bits	Description
K_LCK_EN	[6]	0: lock feature is disabled. 1: lock feature is enabled.
LCK2, LCK1	[5:4]	Keypad lock status[1:0] (00 = unlocked; 11 = locked; read-only bits).
KEC[1]	[3:0]	Key event count of key event register.

[1] The KEC field indicates the key event count of key event registers that have values in the bit (KEC(0000) = 0 events, KEC(0001) = 1 event, KEC(1010) = 10 events). As the key events are read and cleared, the state machine automatically reduces the event count in KEC.

Table 20. KEY_EVENTx—Register 0x04 to Register 0x0D (Key Event Register A to Key Event Register J)[1]

Register Name	Register Description	Bit 7	Bit 6	Bit 5	Bit 4	Bit 3	Bit 2	Bit 1	Bit 0
KEY_EVENTA (Register 0x04)	Key Event Register A status (KE[6:0] = key number), KP[7] = 0: released, 1: pressed (cleared on read)	KA7	KA6	KA5	KA4	KA3	KA2	KA1	KA0
KEY_EVENTB (Register 0x05)	Key Event Register B status (KE[6:0] = key number), KP[7] = 0: released, 1: pressed (cleared on read)	KB7	KB6	KB5	KB4	KB3	KB2	KB1	KB0
KEY_EVENTC (Register 0x06)	Key Event Register C status (KE[6:0] = key number), KP[7] = 0: released, 1: pressed (cleared on read)	KC7	KC6	KC5	KC4	KC3	KC2	KC1	KC0
KEY_EVENTD (Register 0x07)	Key Event Register D status (KE[6:0] = key number), KP[7] = 0: released, 1: pressed (cleared on read)	KD7	KD6	KD5	KD4	KD3	KD2	KD1	KD0
KEY_EVENTE[2] (Register 0x08)	Key Event Register E status (KE[6:0] = key number), KP[7] = 0: released, 1: pressed (cleared on read)	KE7	KE6	KE5	KE4	KE3	KE2	KE1	KE0
KEY_EVENTF (Register 0x09)	Key Event Register F status (KE[6:0] = key number), KP[7] = 0: released, 1: pressed (cleared on read)	KF7	KF6	KF5	KF4	KF3	KF2	KF1	KF0
KEY_EVENTG (Register 0x0A)	Key Event Register G status (KE[6:0] = key number), KP[7] = 0: released, 1: pressed (cleared on read)	KG7	KG6	KG5	KG4	KG3	KG2	KG1	KG0
KEY_EVENTH (Register 0x0B)	Key Event Register H status (KE[6:0] = key number), KP[7] = 0: released, 1: pressed (cleared on read)	KH7	KH6	KH5	KH4	KH3	KH2	KH1	KH0
KEY_EVENTI (Register 0x0C)	Key Event Register I status (KE[6:0] = key number), KP[7] = 0: released, 1: pressed (cleared on read)	KI7	KI6	KI5	KI4	KI3	KI2	KI1	KI0
KEY_EVENTJ (Register 0x0D)	Key Event Register J status (KE[6:0] = key number), KP[7] = 0: released, 1: pressed (cleared on read)	KJ7	KJ6	KJ5	KJ4	KJ3	KJ2	KJ1	KJ0

[1] Data in key event registers is provided as a FIFO, where data is sequentially provided on each read, regardless of an event register read. The user can read the KEY_EVENTA register only for an event count or can read registers sequentially.
[2] KE[6:0] reflects the value 1 to 80 for key press events and the value 97 to 114 for GPI events. For KE[7:0], 0 = key released event, 1 = key pressed event. For GPIEM_CFG, 0 reflects a change in the GPI from GPI_INT_LVL = true to GPI_INT_LVL = false; 1 reflects a change in the GPI in which the GPI_INT_LVL condition becomes true.

Table 21. KP_LCK_TMR—Register 0x0E (Keypad Unlock 1 Timer to Keypad Unlock 2 Timer)

Register Name	Register Description	Bit 7	Bit 6	Bit 5	Bit 4	Bit 3	Bit 2	Bit 1	Bit 0
KP_LCK_TMR	Keypad Unlock 1 timer to Keypad Unlock 2 timer[2:0] (0: disabled, 1 sec to 7 sec) Keypad Lock Interrupt Mask Timer[7:3] (0: disabled, 0 sec to 31 sec)[1, 2]	KIMT7	KIMT6	KIMT5	KIMT4	KIMT3	KLLT2	KLLT1	KLLT0

[1] When the keypad lock interrupt mask timer is enabled, the user must press two specific keys before a keylock interrupt is generated or keypad events are recorded. After the keypad is locked, the first time that the user presses any key, a key event interrupt is generated. No additional interrupt is generated unless both unlock key sequences are correct; then a keylock interrupt is generated. When the interrupt mask timer is disabled (0), an interrupt is generated only when the correct full unlock sequence is completed.

[2] The Unlock 1 timer and Unlock 2 timer keys can be either a key sequence or GPIEM_CFG sequence. The unlock timer keys can be programmed with any value of the keys in the keypad matrix or any GPI values that are part of the key event table. The keylock enable bit (Bit 6, Register 0x03) must be set to lock the keypad.

Table 22. UNLOCK1—Register 0x0F (Unlock Key 1)

Register Name	Register Description	Bit 7	Bit 6	Bit 5	Bit 4	Bit 3	Bit 2	Bit 1	Bit 0
UNLOCK1	Unlock Key 1[6:0] (contains key number for Unlock Key 1; 0: disabled)	N/A	ULK6	ULK5	ULK4	ULK3	ULK2	ULK1	ULK0

Table 23. UNLOCK2—Register 0x10 (Unlock Key 2)

Register Name	Register Description	Bit 7	Bit 6	Bit 5	Bit 4	Bit 3	Bit 2	Bit 1	Bit 0
UNLOCK2	Unlock Key 2[6:0] (contains key number for Unlock Key 2; 0: disabled)	N/A	ULK6	ULK5	ULK4	ULK3	ULK2	ULK1	ULK0

Table 24. GPIO_INT_STATx—Register 0x11 to Register 0x13 (GPIO Interrupt Status)

Register Name	Register Description	Bit 7	Bit 6	Bit 5	Bit 4	Bit 3	Bit 2	Bit 1	Bit 0
GPIO_INT_STAT1 (Register 0x11)	GPIO interrupt status (used to check GPIO interrupt status, cleared on read)	R7IS	R6IS	R5IS	R4IS	R3IS	R2IS	R1IS	R0IS
GPIO_INT_STAT2 (Register 0x12)	GPIO interrupt status (used to check GPIO interrupt status, cleared on read)	C7IS	C6IS	C5IS	C4IS	C3IS	C2IS	C1IS	C0IS
GPIO_INT_STAT3 (Register 0x13)	GPIO interrupt status (used to check GPIO interrupt status, cleared on read)	N/A	N/A	N/A	N/A	N/A	N/A	C9IS	C8IS

Table 25. GPIO_DAT_STATx—Register 0x14 to Register 0x16 (GPIO Data Status)

Register Name	Register Description	Bit 7	Bit 6	Bit 5	Bit 4	Bit 3	Bit 2	Bit 1	Bit 0
GPIO_DAT_STAT1 (Register 0x14)	GPIO data status (shows GPIO state when read for inputs)	R7DS	R6DS	R5DS	R4DS	R3DS	R2DS	R1DS	R0DS
GPIO_DAT_STAT2 (Register 0x15)	GPIO data status (shows GPIO state when read for inputs)	C7DS	C6DS	C5DS	C4DS	C3DS	C2DS	C1DS	C0DS
GPIO_DAT_STAT3 (Register 0x16)	GPIO data status (shows GPIO state when read for inputs)	N/A	N/A	N/A	N/A	N/A	N/A	C9DS	C8DS

Table 26. GPIO_DAT_OUTx—Register 0x17 to Register 0x19 (GPIO Data Out)

Register Name	Register Description	Bit 7	Bit 6	Bit 5	Bit 4	Bit 3	Bit 2	Bit 1	Bit 0
GPIO_DAT_OUT1 (Register 0x17)	GPIO data out (GPIO data to be written to GPIO out driver, inputs are not affected). This is needed so that the value can be written prior to being set as an output.	R7DO	R6DO	R5DO	R4DO	R3DO	R2DO	R1DO	R0DO
GPIO_DAT_OUT2 (Register 0x18)	GPIO data out (GPIO data to be written to GPIO out driver, inputs are not affected). This is needed so that the value can be written prior to being set as an output.	C7DO	C6DO	C5DO	C4DO	C3DO	C2DO	C1DO	C0DO
GPIO_DAT_OUT3 (Register 0x19)	GPIO data out (GPIO data to be written to GPIO out driver, inputs are not affected). This is needed so that the value can be written prior to being set as an output.	N/A	N/A	N/A	N/A	N/A	N/A	C9DO	C8DO

Table 27. GPIO_INT_ENx—Register 0x1A to Register 0x1C (GPIO Interrupt Enable)

Register Name	Register Description	Bit 7	Bit 6	Bit 5	Bit 4	Bit 3	Bit 2	Bit 1	Bit 0
GPIO_INT_EN1 (Register 0x1A)	GPIO interrupt enable (enables interrupts for GP inputs only)	R7IE	R6IE	R5IE	R4IE	R3IE	R2IE	R1IE	R0IE
GPIO_INT_EN2 (Register 0x1B)	GPIO interrupt enable (enables interrupts for GP inputs only)	C7IE	C6IE	C5IE	C4IE	C3IE	C2IE	C1IE	C0IE
GPIO_INT_EN3 (Register 0x1C)	GPIO interrupt enable (enables interrupts for GP inputs only)	N/A	N/A	N/A	N/A	N/A	N/A	C9IE	C8IE

Table 28. KP_GPIOx—Register 0x1D to Register 0x1F (Keypad or GPIO Selection)

Register Name	Register Description	Bit 7	Bit 6	Bit 5	Bit 4	Bit 3	Bit 2	Bit 1	Bit 0
KP_GPIO1 (Register 0x1D)	Keypad or GPIO selection 0: GPIO 1: KP matrix	R7	R6	R5	R4	R3	R2	R1	R0
KP_GPIO2 (Register 0x1E)	Keypad or GPIO selection 0: GPIO 1: KP matrix	C7	C6	C5	C4	C3	C2	C1	C0
KP_GPIO3 (Register 0x1F)	Keypad or GPIO selection 0: GPIO 1: KP matrix	N/A	N/A	N/A	N/A	N/A	N/A	C9	C8

Table 29. GPI_EM_REGx—Register 0x20 to Register 0x22 (GPI Event Mode 1 to GPI Event Mode 3)

Register Name	Register Description	Bit 7	Bit 6	Bit	Bit 4	Bit 3	Bit 2	Bit 1	Bit 0
GPI_EM_REG1 (Register 0x20)	GPI Event Mode Register 1 0: GPI not part of event FIFO 1: GPI part of event FIFO (R0 to R7)	R7_EM	R6_EM	R5_EM	R4_EM	R3_EM	R2_EM	R1_EM	R0_EM
GPI_EM_REG2 (Register 0x21)	GPI Event Mode Register 2 0: GPI not part of event FIFO 1: GPI part of event FIFO (C0 to C7)	C7_EM	C6_EM	C5_EM	C4_EM	C3_EM	C2_EM	C1_EM	C0_EM
GPI_EM_REG3 (Register 0x22)	GPI Event Mode Register 3 0: GPI not part of event FIFO 1: GPI part of event FIFO (C8 to C9)	NA	NA	NA	NA	NA	NA	C9_EM	C8_EM

Table 30. GPIO_DIRx—Register 0x23 to Register 0x25 (GPIO Data Direction)

Register Name	Register Description	Bit 7	Bit 6	Bit 5	Bit 4	Bit 3	Bit 2	Bit 1	Bit 0
GPIO_DIR1 (Register 0x23)	GPIO data direction 0: input 1: output	R7D	R6D	R5D	R4D	R3D	R2D	R1D	R0D
GPIO_DIR2 (Register 0x24)	GPIO data direction 0: input 1: output	C7D	C6D	C5D	C4D	C3D	C2D	C1D	C0D
GPIO_DIR3 (Register 0x25)	GPIO data direction 0: input 1: output	N/A	N/A	N/A	N/A	N/A	N/A	C9D	C8D

Table 31. GPIO_INT_LVLx—Register 0x26 to Register 0x28 (GPIO Level Detect)

Register Name	Register Description	Bit 7	Bit 6	Bit 5	Bit 4	Bit 3	Bit 2	Bit 1	Bit 0
GPIO_INT_LVL1 (Register 0x26)	GPIO INT level detect 0: low 1: high	R7IL	R6IL	R5IL	R4IL	R3IL	R2IL	R1IL	R0IL
GPIO_INT_LVL2 (Register 0x27)	GPIO INT level detect 0: low 1: high	C7IL	C6IL	C5IL	C4IL	C3IL	C2IL	C1IL	C0IL
GPIO_INT_LVL3 (Register 0x28)	GPIO INT level detect 0: low 1: high	N/A	N/A	N/A	N/A	N/A	N/A	C9IL	C8IL

Table 32. DEBOUNCE_DISx—Register 0x29 to Register 0x2B (Debounce Disable)

Register Name	Register Description	Bit 7	Bit 6	Bit 5	Bit 4	Bit 3	Bit 2	Bit 1	Bit 0
DEBOUNCE_DIS1 (Register 0x29)	Debounce disable (inputs) 0: enabled 1: disabled	R7DD	R6DD	R5DD	R4DD	R3DD	R2DD	R1DD	R0DD
DEBOUNCE_DIS2 (Register 0x2A)	Debounce disable (inputs) 0: enabled 1: disabled	C7DD	C6DD	C5DD	C4DD	C3DD	C2DD	C1DD	C0DD
DEBOUNCE_DIS3 (Register 0x2B)	Debounce disable (inputs) 0: enabled 1: disabled	N/A	N/A	N/A	N/A	N/A	N/A	C9DD	C8DD

Table 33. GPIO_PULLx—Register 0x2C to Register 0x2E (GPIO Pull Disable)

Register Name	Register Description	Bit 7	Bit 6	Bit 5	Bit 4	Bit 3	Bit 2	Bit 1	Bit 0
GPIO_PULL1 (Register 0x2C)	GPIO pull disable (remove pull-ups from inputs) 0: pull enabled 1: pull disabled	R7PD	R6PD	R5PD	R4PD	R3PD	R2PD	R1PD	R0PD
GPIO_PULL2 (Register 0x2D)	GPIO pull disable (remove pull-ups from inputs) 0: pull enabled 1: pull disabled	C7PD	C6PD	C5PD	C4PD	C3PD	C2PD	C1PD	C0PD
GPIO_PULL3 (Register 0x2E)	GPIO pull disable (remove pull-ups from inputs) 0: pull enabled 1: pull disabled	N/A	N/A	N/A	N/A	N/A	N/A	C9PD	C8PD

APPLICATIONS INFORMATION

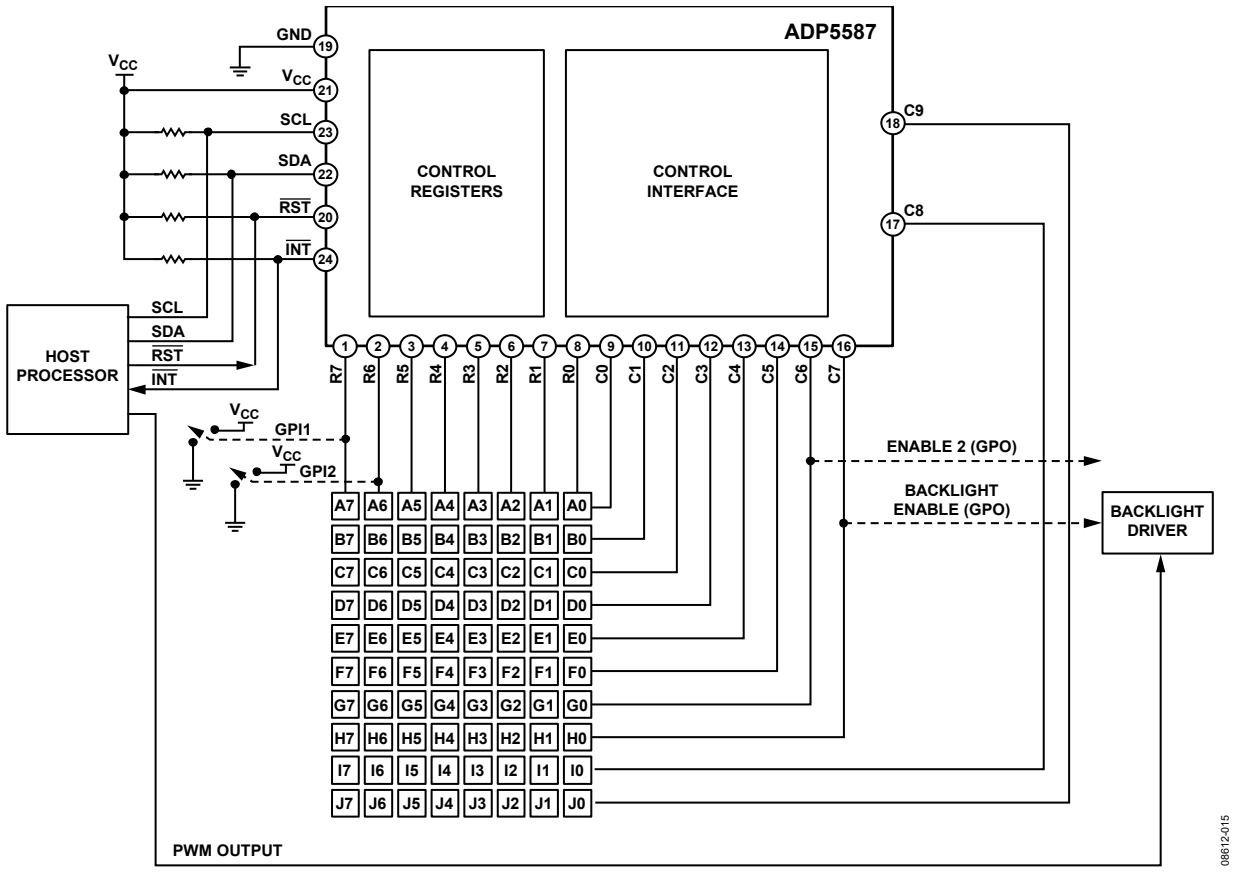

Figure 19. ADP5587 Detailed Application Block Diagram

APPLICATIONS OVERVIEW

The ADP5587 is designed to complement host processors in a variety of ways. Its versatility makes it the ideal solution for mobile platforms that require extended keypads and GPIO expanders. The programmable registers give the designer the flexibility to configure any or all of its GPIOs in a variety of ways. Figure 19 shows a detailed application diagram.

KEYPAD CURRENT

Keypad current drain varies based on how many keys and how many rows and columns are pressed during multiple key presses. Table 34 shows the typical current drain for a single key press and for two key presses.

Table 34. Typical Current Drain

Number of Key Presses	Conditions[1]	Typical	Unit
1	V_{CC} = 1.8 V to 3.0 V	55	µA
2	V_{CC} = 1.8 V to 3.0 V	100	µA

[1] $T_A = T_J$ = −40°C to +85°C.

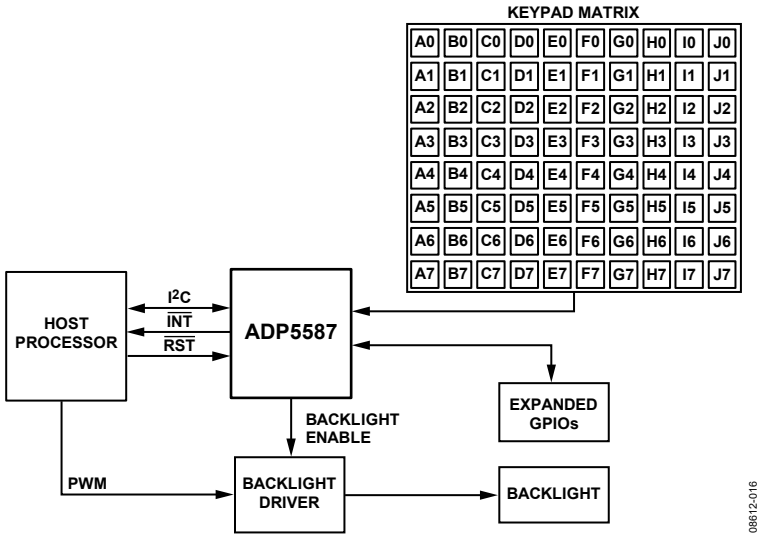

Figure 20. Integration Block Diagram

OUTLINE DIMENSIONS

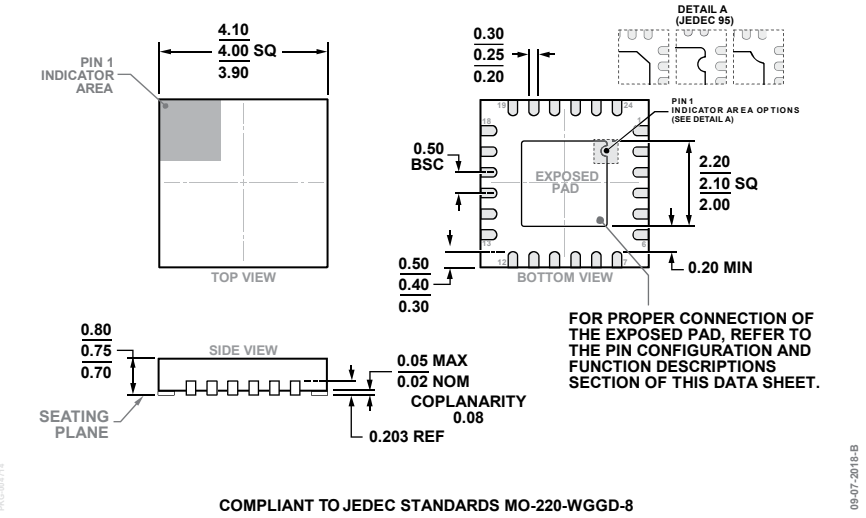

Figure 21. 24-Lead Lead Frame Chip Scale Package [LFCSP]
4 mm × 4 mm Body and 0.75 mm Package Height
(CP-24-10)
Dimensions shown in millimeters

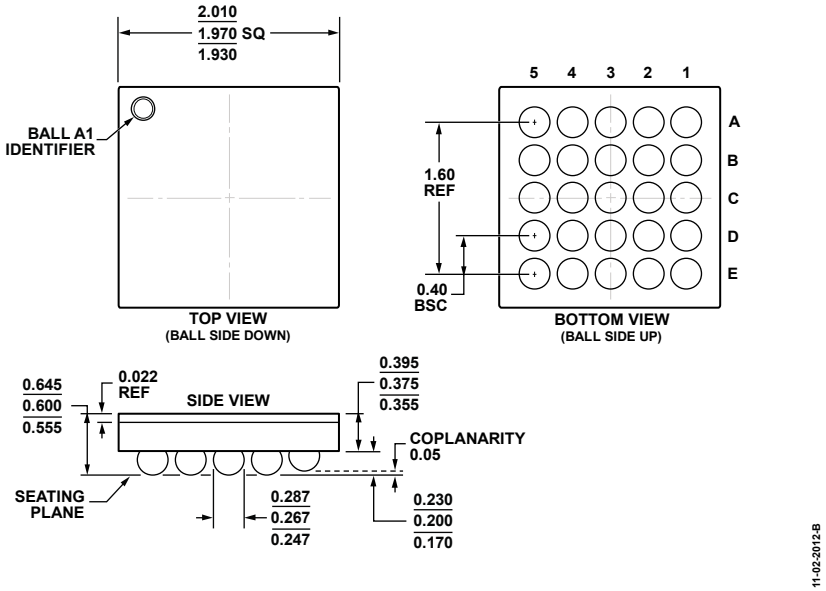

Figure 22. 25-Ball Wafer Level Chip Scale Package [WLCSP]
(CB-25-4)
Dimensions shown in millimeters

ORDERING GUIDE

Model[1]	Temperature Range	I²C Write Address		Package Description	Package Option
		Write	Read		
ADP5587ACPZ-R7	−40°C to +85°C	0x68	0x69	24-Lead Lead Frame Chip Scale Package [LFCSP]	CP-24-10
ADP5587ACPZ-1-R7	−40°C to +85°C	0x60	0x61	24-Lead Lead Frame Chip Scale Package [LFCSP]	CP-24-10
ADP5587ACBZ-R7	−40°C to +85°C	0x68	0x69	25-Ball Wafer Level Chip Scale Package [WLCSP]	CB-25-4
ADP5587CP-EVALZ		0x68	0x69	Evaluation Board [LFCSP]	
ADP5587CB-EVALZ		0x68	0x69	Evaluation Board [WLCSP]	

[1] Z = RoHS Compliant Part.

NOTES

I²C refers to a communications protocol originally developed by Philips Semiconductors (now NXP Semiconductors).

©2009–2019 Analog Devices, Inc. All rights reserved. Trademarks and registered trademarks are the property of their respective owners.
D08612-0-10/19(E)