Digital Controller for Isolated Power Supply with PMBus Interface

Data Sheet

ADP1052

FEATURES

- Peak data telemetry recording
- High speed input voltage feedforward control
- 6 pulse-width modulation (PWM) logic outputs with 625 ps resolution
- Switching frequency: 49 kHz to 625 kHz
- Frequency synchronization as master and slave device
- Multiple energy saving modes
- Adaptive dead time compensation for efficiency optimization
- Low power consumption: 100 mW typical
- Direct parallel control for power supplies without OR'ing devices
  - Accurate droop current share
  - Prebias startup
  - Reverse current protection
  - Conditional overvoltage protection
- Extensive fault detection and protection
- PMBus compliant
- Graphical user interface (GUI) for ease of programming
- On-board EEPROM for programming and data storage
- Available in a 24-lead, 4 mm × 4 mm LFCSP
- −40°C to +125°C operating temperature

APPLICATIONS

- High density isolated dc-to-dc power supplies
  - Intermediate bus converters
  - High availability parallel power systems
- Server, storage, industrial, networking, and communications infrastructure

GENERAL DESCRIPTION

The ADP1052 is an advanced digital controller with a PMBus™ interface targeting high density, high efficiency, dc-to-dc power conversion. This controller implements voltage mode control with high speed, input line feedforward for enhanced transient and improved noise performance. The ADP1052 has six programmable pulse-width modulation (PWM) outputs capable of controlling most high efficiency power supply topologies, with added control of synchronous rectification (SR). The device includes adaptive dead time compensation to improve efficiency over the load range, and programmable light load mode operation, combined with low power consumption, to reduce system standby power losses.

The ADP1052 implements several features to enable a robust system of parallel and redundant operation for customers that require high availability or parallel connection. The device provides synchronization, reverse current protection, prebias startup, accurate current sharing between power supplies, and conditional overvoltage techniques to identify and safely shut down an erroneous power supply in parallel operation mode.

The ADP1052 is based on flexible state machine architecture and is programmed using an intuitive GUI. The easy to use interface reduces design cycle time and results in a robust, hardware coded system loaded into the built-in EEPROM. The small size (4 mm × 4 mm) LFCSP package makes the ADP1052 ideal for ultracompact, isolated dc-to-dc power module or embedded power designs.

TYPICAL APPLICATIONS CIRCUIT

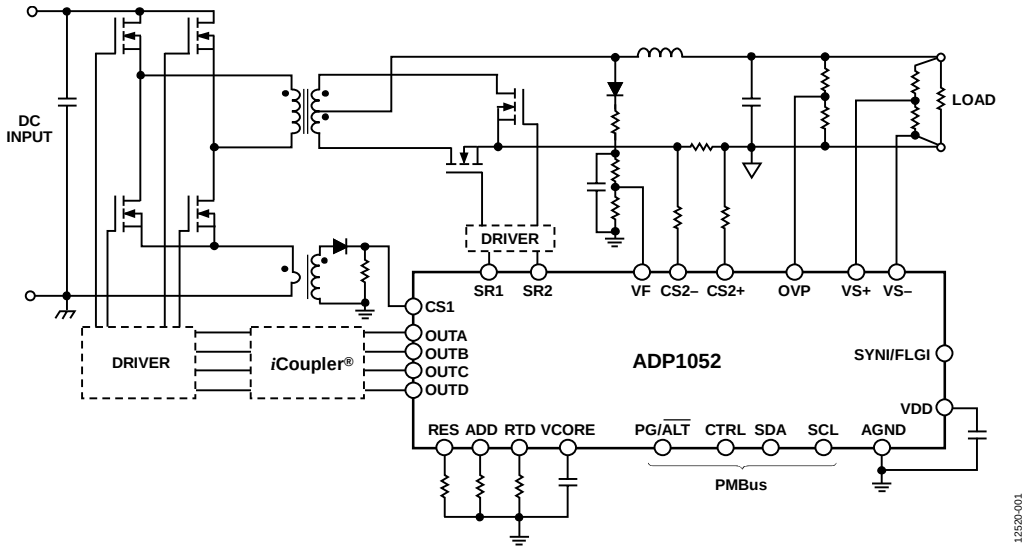

Figure 1.

Rev. B **Document Feedback**

Information furnished by Analog Devices is believed to be accurate and reliable. However, no responsibility is assumed by Analog Devices for its use, nor for any infringements of patents or other rights of third parties that may result from its use. Specifications subject to change without notice. No license is granted by implication or otherwise under any patent or patent rights of Analog Devices. Trademarks and registered trademarks are the property of their respective owners.

One Technology Way, P.O. Box 9106, Norwood, MA 02062-9106, U.S.A.
Tel: 781.329.4700 ©2015–2017 Analog Devices, Inc. All rights reserved.
Technical Support www.analog.com

TABLE OF CONTENTS

Features ... 1
Applications ... 1
General Description ... 1
Typical Applications Circuit ... 1
Revision History ... 3
Specifications ... 4
Absolute Maximum Ratings ... 9
  Thermal Resistance ... 9
  Soldering ... 9
  ESD Caution ... 9
Pin Configuration and Function Descriptions ... 10
Typical Performance Characteristics ... 12
Theory of Operation ... 14
  PWM Outputs (OUTA, OUTB, OUTC, OUTD, SR1, and SR2) ... 15
  Synchronous Rectification ... 15
  PWM Modulation Limit and 180° Phase Shift ... 16
  Adaptive Dead Time Compensation (ADTC) ... 17
  Light Load Mode and Deep Light Load Mode ... 17
  Frequency Synchronization ... 18
  Output Voltage Sense and Adjustment ... 20
  Digital Compensator ... 21
  Closed-Loop Input, Voltage Feedforward Control, and VF Sense ... 22
  Open-Loop Input, VF Operation ... 23
  Open-Loop Operation ... 23
  Current Sense ... 24
  Soft Start and Shutdown ... 25
  Volt-Second Balance Control ... 27
  Constant Current Mode ... 27
  Pulse Skipping ... 28
  Prebias Startup ... 28
  Output Voltage Drooping Control ... 28
  VDD and VCORE ... 29
  Chip Password ... 29
Power Monitoring, Flags, and Fault Responses ... 30
  Flags ... 30
  Voltage Readings ... 33
  Current Readings ... 33
  Power Readings ... 33
  Duty Cycle Reading ... 34
  Switching Frequency Reading ... 34
  Temperature Reading ... 34
  Temperature Linearization Scheme ... 35
  PMBus Protection Commands ... 35
  Manufacturer Specific Protection Commands ... 37
  Manufacturer Specific Protection Responses ... 39
  Peak Data Telemetry ... 40
Power Supply Calibration and Trim ... 41
  I_{IN} Trim (CS1 Trim) ... 41
  I_{OUT} Trim (CS2 Trim) ... 41
  V_{OUT} Trim (VS Trim) ... 41
  V_{IN} Trim (VF Gain Trim) ... 42
  RTD and OTP Trim ... 42
Applications Configurations ... 43
Layout Guidelines ... 45
  CS1 Pin ... 45
  CS2+ and CS2− Pins ... 45
  VS+ and VS− Pins ... 45
  OUTA to OUTD, SR1 AND SR2 PWM Outputs ... 45
  VDD Pin ... 45
  VCORE Pin ... 45
  RES Pin ... 45
  SDA and SCL Pins ... 45
  Exposed Pad ... 45
  RTD Pin ... 45
  AGND Pin ... 45
PMBus/I^2C Communication ... 46
  PMBus Features ... 46
  Overview ... 46
  PMBus/I^2C Address ... 46
  Data Transfer ... 46
  General Call Support ... 48
  10-Bit Addressing ... 48
  Fast Mode ... 48
  Fault Conditions ... 48
  Timeout Conditions ... 48
  Data Transmission Faults ... 48
  Data Content Faults ... 49
EEPROM ... 50

EEPROM Features 50
EEPROM Overview 50
Page Erase Operation 50
Read Operation (Byte Read and Block Read) 50
Write Operation (Byte Write and Block Write) 51
EEPROM Password 51
Downloading EEPROM Settings to Internal Registers 52
Saving Register Settings to the EEPROM 52
EEPROM CRC Checksum 52
GUI Software 53
PMBus Command Set 54
Extended Command List: Manufacturer Specific 57
PMBus Command Descriptions 60
Basic PMBus Commands 60
Manufacturer Specific Extended Commands Descriptions 80
Flag Configuration Registers 80
Soft Start and Software Reset Registers 82
Blanking and PGOOD Setting Registers 83
Switching Frequency and Synchronization Registers 86
Current Sense and Limit Setting Registers 87
Voltage Sense and Limit Setting Registers 92
Temperature Sense and Protection Setting Registers 93
Digital Compensator and Modulation Setting Registers 94
PWM Outputs Timing Registers 97
Volt-Second Balance Control Registers 99
Duty Cycle Reading Setting Registers 101
Adaptive Dead Time Compensation Registers 101
Other Register Settings 104
Manufacturer Specific Fault Flag Registers 108
Manufacturer Specific Value Reading Registers 111
Outline Dimensions 113
Ordering Guide 113

REVISION HISTORY

6/2017—Rev. A to Rev. B

Updated Outline Dimensions 113
Changes to Ordering Guide 113

4/2015—Rev. 0 to Rev. A

Changes to Ordering Guide 113

1/2015—Revision 0: Initial Version

SPECIFICATIONS

V_{DD} = 3.0 V to 3.6 V, T_J = −40°C to +125°C, unless otherwise noted; FSR = full-scale range.

Table 1.

Parameter	Symbol	Min	Typ	Max	Unit	Test Conditions/Comments
SUPPLY						
Supply Voltage	V_{DD}	3.0	3.3	3.6	V	2.2 µF capacitor connected to AGND
Supply Current	I_{DD}		33		mA	Normal operation; PWM pins unloaded
			I_{DD} + 6		mA	During EEPROM programming
			50	100	µA	Shutdown; V_{DD} below undervoltage lockout (UVLO)
POWER-ON RESET						
Power-On Reset				3.0	V	V_{DD} rising
UVLO Threshold	UVLO	2.75	2.85	2.97	V	V_{DD} falling
UVLO Hysteresis			35		mV	
Overvoltage Lockout (OVLO) Threshold	OVLO	3.7	3.9	4.1	V	
OVLO Debounce			2		µs	VDD_OV flag debounce set to 2 µs
			500		µs	VDD_OV flag debounce set to 500 µs
VCORE PIN						
Output Voltage	V_{CORE}	2.45	2.6	2.75	V	330 nF capacitor connected to AGND
OSCILLATOR AND PLL						
PLL Frequency		190	200	210	MHz	RES input = 10 kΩ (±0.1%)
Digital PWM Resolution			625		ps	
OUTA, OUTB, OUTC, OUTD, SR1, SR2 PINS						
Output Voltage						
Low	V_{OL}			0.4	V	I_{OH} = 10 mA
High	V_{OH}	V_{DD} − 0.4			V	I_{OL} = −10 mA
Rise Time	t_R		3.5		ns	C_{LOAD} = 50 pF
Fall Time	t_F		1.5		ns	C_{LOAD} = 50 pF
Output Current						
Source	I_{OL}	−10			mA	
Sink	I_{OH}			10	mA	
Synchronization Signal Output (SYNO) Positive Pulse Width		600	640	680	ns	OUTC or OUTD programmed as SYNO
VS+, VS− VOLTAGE SENSE PINS						
Input Voltage Range	V_{IN}	0	1	1.6	V	Differential voltage from VS+ to VS−
Leakage Current				1.0	µA	
Voltage Sense (VS) Accurate Analog-to-Digital Converter (ADC)						
Valid Input Voltage Range		0		1.6	V	
ADC Clock Frequency			1.56		MHz	
Register Update Rate			10		ms	
Measurement						
Resolution			12		Bits	
Accuracy						Factory trimmed at 1.0 V
		−5		+5	% FSR	0% to 100% of input voltage range
		−80		+80	mV	
		−2		+2	% FSR	10% to 90% of input voltage range
		−32		+32	mV	
		−1.0		+1.0	% FSR	900 mV to 1.1 V
		−16		+16	mV	
Temperature Coefficient				70	ppm/°C	
Voltage Differential from VS− to AGND		−200		+200	mV	

Parameter	Symbol	Min	Typ	Max	Unit	Test Conditions/Comments
VS High Speed ADC						
Equivalent Sampling Frequency	f_{SAMP}		f_{SW}		kHz	
Equivalent Resolution			6		Bits	f_{SW} = 390.5 kHz
Dynamic Range			±25		mV	Regulation voltage = 0 mV to 1.6 V
VS Undervoltage Protection (UVP) Digital Comparator						Triggers VOUT_UV_FAULT flag
Threshold Accuracy		−2		+2	% FSR	10% to 90% of input voltage range
Comparator Update Speed			82		µs	
OVP PIN						Triggers VOUT_OV_FAULT flag
Leakage Current				1.0	µA	
Overvoltage Protection (OVP) Comparator						
Voltage Range		0.75		1.5	V	Differential voltage from OVP to VS−
Threshold Accuracy		−1.6	1	+1.6	%	0.75 V to 1.5 V voltage range
Propagation Delay (Latency)			61	85	ns	Debounce time not included
VF VOLTAGE SENSE PIN						
Input Voltage Range	V_{IN}	0	1	1.6	V	Voltage from VF to AGND
Leakage Current				1.0	µA	
General ADC						
Valid Input Voltage Range		0		1.6	V	
ADC Clock Frequency			1.56		MHz	
Register Update Rate			1.31		ms	
Measurement						
Resolution			11		Bits	
Accuracy		−2		+2	% FSR	10% to 90% of input voltage range
		−32		+32	mV	
		−5		+5	% FSR	0% to 100% of input voltage range
		−80		+80	mV	
Feedforward Voltage (VF) UVP Digital Comparator						Triggers VIN_LOW or VIN_UV_FAULT flag
Threshold Accuracy						Based on VF general ADC parameter values
Comparator Update Speed			1.31		ms	
Feedforward ADC						
Input Voltage Range	V_{IN}	0.5	1	1.6	V	
Resolution			11		Bits	
Sampling Period			10		µs	
CS1 CURRENT SENSE PIN						
Input Voltage Range	V_{IN}	0	1	1.6	V	Voltage from CS1 to AGND
Source Current		−1.2		−0.35	µA	
CS1 ADC						
Valid Input Voltage Range		0		1.6	V	
ADC Clock Frequency			1.56		MHz	
Register Update Rate			10		ms	
Measurement						
Resolution			12		Bits	
Accuracy		−2		+2	% FSR	10% to 90% of input voltage range
		−32		+32	mV	
		−5		+5	% FSR	0% to 100% of input voltage range
		−80		+80	mV	
CS1 Overcurrent Protection (OCP) Comparator						Triggers internal CS1_OCP flag
Reference Accuracy		1.185	1.2	1.215	V	When set to 1.2 V
		0.235	0.25	0.265	V	When set to 0.25 V
Propagation Delay (Latency)			65	105	ns	Debounce/blanking time not included

Parameter	Symbol	Min	Typ	Max	Unit	Test Conditions/Comments
CS3[1] Measurement and Digital Comparator						Triggers CS3_OC_FAULT flag
Register Update Rate			10		ms	
Comparator Speed			10		ms	
CS2+, CS2− CURRENT SENSE PINS						
Input Voltage Range	V_{IN}	0		120	mV	Differential voltage from CS2+ to CS2−
Common-Mode Voltage at CS2+ and CS2−		0.8	1.15	1.4	V	To achieve CS2 current measurement accuracy
Current						
Sink (High-Side Mode)		1.87	1.915	1.96	mA	
Source (Low-Side Mode)		195	225	255	µA	
Temperature Coefficient				95	ppm/°C	
CS2 ADC						
Valid Input Voltage Range		0		120	mV	
ADC Clock Frequency			1.56		MHz	
Measurement Resolution			12		Bits	
Current Measurement Sense Accuracy						
Low-Side Mode						4.99 kΩ (0.01%) level shift resistors
		−1.9		+1.9	% FSR	From 0 mV to 110 mV
		−2.28		+2.28	mV	
		−6.1		+1.4	% FSR	From 110 mV to 120 mV
		−7.32		+1.68	mV	
High-Side Mode						With CS2 high-side factory trim values loaded; 4.99 kΩ (0.01%) level shift resistors; V_{OUT} = 11 V
		−1.6		+2.3	% FSR	From 0 mV to 110 mV
		−1.92		+2.76	mV	
		−5.3		+0.7	% FSR	From 110 mV to 120 mV
		−6.36		+0.84	mV	
CS2 OCP Digital Comparator						Triggers IOUT_OC_FAULT flag
Threshold Accuracy						Same as CS2 ADC low-side and high-side mode current measurement sense accuracy values
Comparator Update Speed			82		µs	When set to the 7-bit averaging speed
			328		µs	When set to the 9-bit averaging speed
CS2 Reverse Current Comparator						Triggers SR_RC_FAULT flag
Threshold Accuracy		−8.5	−3	+3	mV	SR_RC_FAULT_LIMIT set to −3 mV
		−11.5	−6	0	mV	SR_RC_FAULT_LIMIT set to −6 mV
		−14	−9	−3	mV	SR_RC_FAULT_LIMIT set to −9 mV
		−17	−12	−6	mV	SR_RC_FAULT_LIMIT set to −12 mV
		−21	−15	−9	mV	SR_RC_FAULT_LIMIT set to −15 mV
		−24	−18	−12	mV	SR_RC_FAULT_LIMIT set to −18 mV
		−27	−21	−15	mV	SR_RC_FAULT_LIMIT set to −21 mV
		−30	−24	−18	mV	SR_RC_FAULT_LIMIT set to −24 mV
Propagation Delay			110	150	ns	Debounce time = 40 ns
RTD TEMPERATURE SENSE PIN						
Input Voltage Range	V_{IN}	0		1.6	V	Voltage from RTD to AGND
Source Current		44.6	46	47.3	µA	Register 0xFE2D = 0xE6, factory default setting
		38.6	40	42	µA	Register 0xFE2D = 0xB0
		28.6	30	31.8	µA	Register 0xFE2D = 0x80
		18.6	20	21.6	µA	Register 0xFE2D = 0x40
		9.1	10	11	µA	Register 0xFE2D = 0x00

Parameter	Symbol	Min	Typ	Max	Unit	Test Conditions/Comments
RTD ADC						
Valid Input Voltage Range		0		1.6	V	
ADC Clock Frequency			1.56		MHz	
Register Update Rate			10		ms	
Measurement						
Resolution			12		Bits	
Accuracy		−0.3		+0.45	% FSR	2% to 20% of the input voltage range
		−4.8		+7.2	mV	
		−2		+2	% FSR	0% to 100% of the input voltage range
		−80		+80	mV	
OTP Digital Comparator						Triggers OT_FAULT flag
Threshold Accuracy		−0.9		+0.25	% FSR	T = 85°C with 100 kΩ||16.5 kΩ
		−14.4		+4	mV	
		−0.5		+1.1	% FSR	T = 100°C with 100 kΩ||16.5 kΩ
		−8		+17.6	mV	
Comparator Update Speed			10		ms	
Temperature Readings According to Internal Linearization Scheme						Current source set to 46 µA (Register 0xFE2D = 0xE6); NTC R25 = 100 kΩ (1%); beta = 4250 (1%); R_{EXT} = 16.5 kΩ (1%)
				7	°C	25°C to 100°C
				5	°C	100°C to 125°C
PG/$\overline{\text{ALT}}$ (OPEN-DRAIN) PIN						
Output Low Level	V_{OL}			0.4	V	Sink current = 10 mA
CTRL PIN						
Input Level						
Low	V_{IL}			0.4	V	
High	V_{IH}	V_{DD} − 0.8			V	
Leakage Current				1.0	µA	
SYNI/FLGI PINS						
Input Level						
Low	V_{IL}			0.4	V	
High	V_{IH}	V_{DD} − 0.8			V	
Synchronization Range, Percent of Internal Clock Period	t_{SYNC}	90		110	%	
SYNI Pulse Width						
Positive		360			ns	External clock applied on the SYNI/FLGI pin
Negative		360			ns	External clock applied on the SYNI/FLGI pin
SYNI Period Drift				280	ns	Period drift between two consecutive external clocks
Leakage Current				1.0	µA	
SDA, SCL PINS						
Input Voltage						
Low	V_{IL}			0.8	V	
High	V_{IH}	V_{DD} − 0.8			V	
Output Voltage Low	V_{OL}			0.4	V	Sink current = 3 mA
Leakage Current		−5		+5	µA	
SERIAL BUS TIMING						See Figure 2
Clock Operating Frequency		10	100	400	kHz	
Glitch Immunity				50	ns	
Bus Free Time	t_{BUF}	1.3			µs	Between stop and start conditions

Parameter	Symbol	Min	Typ	Max	Unit	Test Conditions/Comments
Start Setup Time	$t_{SU;STA}$	0.6			µs	Repeated start condition setup time
Start Hold Time	$t_{HD;STA}$	0.6			µs	Hold time after (repeated) start condition; after this period, the first clock is generated
Stop Setup Time	$t_{SU;STO}$	0.6			µs	
SDA Setup Time	$t_{SU;DAT}$	100			ns	
SDA Hold Time	$t_{HD;DAT}$	125			ns	For readback
		300			ns	For write
SCL Low Timeout	$t_{TIMEOUT}$	25		35	ms	
SCL Low Time	t_{LOW}	0.6			µs	
SCL High Time	t_{HIGH}	0.6			µs	
SCL Low Extend Time	$t_{LOW;SEXT}$			25	ms	
SCL, SDA Rise Time	t_R	20		300	ns	
SCL, SDA Fall Time	t_F	20		300	ns	
EEPROM						
EEPROM Update Time				40	ms	Time from the update command to completion of the EEPROM update
Reliability						
Endurance[2]		10,000			Cycles	T_J = 85°C
		1000			Cycles	T_J = 125°C
Data Retention[3]		20			Years	T_J = 85°C
		15			Years	T_J = 125°C

[1] CS3 is an alternative output current reading that is calculated by the CS1 reading (representing input current), duty cycle, and main transformer turn ratio.
[2] Endurance is qualified per JEDEC Standard 22, Method A117, measured at −40°C, +25°C, +85°C, and +125°C.
[3] Retention lifetime equivalent at junction temperature per JEDEC Standard 22, Method A117.

Timing Diagram

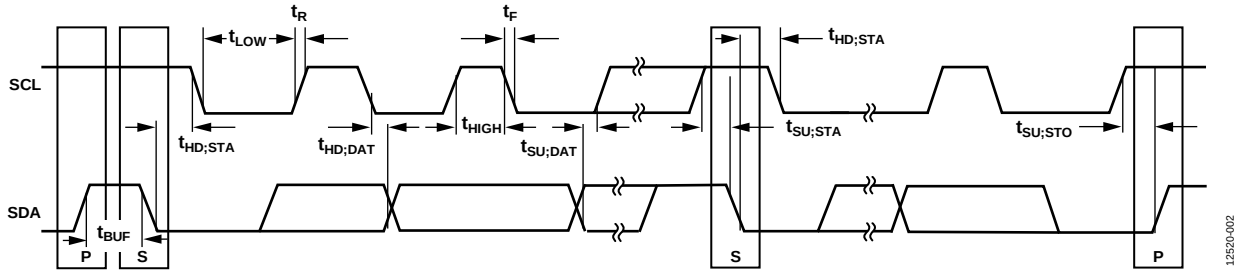

Figure 2. Serial Bus Timing Diagram

ABSOLUTE MAXIMUM RATINGS

Table 2.

Parameter	Rating
Supply Voltage (Continuous) V_{DD} to AGND	4.2 V
Digital Pins (OUTA, OUTB, OUTC, OUTD, SR1, SR2) to AGND	−0.3 V to V_{DD} + 0.3 V
PG/$\overline{ALT}$, SDA, SCL to AGND	−0.3 V to +3.9 V
VS−, VS+, VF, OVP, RTD, ADD, CS1, CS2+, CS2− to AGND	−0.3 V to V_{DD} + 0.3 V
SYNI/FLGI, CTRL to AGND	−0.3 V to V_{DD} + 0.3 V
Operating Temperature Range (T_A)	−40°C to +125°C
Storage Temperature Range	−65°C to +150°C
Junction Temperature	150°C
Peak Solder Reflow Temperature	
SnPb Assemblies (10 sec to 30 sec)	240°C
RoHS-Compliant Assemblies (20 sec to 40 sec)	260°C
ESD Models	
ESD Charged Device Model	1.25 kV
ESD Human Body Model	5.0 kV

Stresses at or above those listed under Absolute Maximum Ratings may cause permanent damage to the product. This is a stress rating only; functional operation of the product at these or any other conditions above those indicated in the operational section of this specification is not implied. Operation beyond the maximum operating conditions for extended periods may affect product reliability.

THERMAL RESISTANCE

θ_{JA} is specified for the worst-case conditions, that is, a device soldered in a circuit board for surface-mount packages.

Table 3. Thermal Resistance

Package Type	θ_{JA}	θ_{JC}	Unit
24-Lead LFCSP	36.26	1.51	°C/W

SOLDERING

It is important to follow the correct guidelines when laying out the printed circuit board (PCB) footprint for the ADP1052 and for soldering the device onto the PCB. For detailed information about these guidelines, see the AN-772 Application Note, *A Design and Manufacturing Guide for the Lead Frame Chip Scale Package (LFCSP)*.

ESD CAUTION



ESD (electrostatic discharge) sensitive device. Charged devices and circuit boards can discharge without detection. Although this product features patented or proprietary protection circuitry, damage may occur on devices subjected to high energy ESD. Therefore, proper ESD precautions should be taken to avoid performance degradation or loss of functionality.

PIN CONFIGURATION AND FUNCTION DESCRIPTIONS

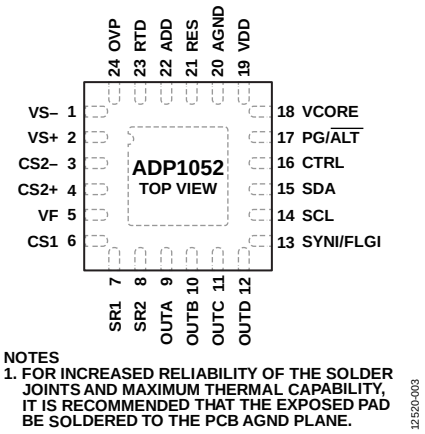

Figure 3. Pin Configuration

Table 4. Pin Function Descriptions

Pin No.	Mnemonic	Description
1	VS–	Inverting Voltage Sense Input. This pin is the connection for the ground line of the power rail. Provide a low ohmic connection to AGND. To allow for trimming, it is recommended that the resistor divider on this input have a tolerance specification of ≤0.5%.
2	VS+	Noninverting Voltage Sense Input. This pin signal is referred to VS–. To allow for trimming, it is recommended that the resistor divider on this input have a tolerance specification of ≤0.5%.
3	CS2–	Inverting Differential Current Sense Input. For best operation, use a nominal voltage of 1.12 V with this pin. When using low-side current sensing, place a 4.99 kΩ level shifting resistor between the sense resistor and this pin. When using high-side current sensing in a 12 V application, place a 5.62 kΩ resistor between the sense resistor and this pin. When using high-side current sensing, apply the formula R = (V_{OUT} − 1.12 V)/1.915 mA. A 0.1% resistor must be used to connect this circuit. If this pin is not used, connect it to AGND and set the CS2 current sense to high-side current sense mode (Register 0xFE19[7] = 1 binary).
4	CS2+	Noninverting Differential Current Sense Input. For best operation, use a nominal voltage of 1.12 V with this pin. When using low-side current sensing, place a 4.99 kΩ level shifting resistor between the sense resistor and this pin. When using high-side current sensing in a 12 V application, place a 5.62 kΩ resistor between the sense resistor and this pin. When using high-side current sensing, apply the formula R = (V_{OUT} − 1.12 V)/1.915 mA. A 0.1% resistor must be used to connect this circuit. If this pin is not used, connect it to AGND and set the CS2 current sense to high-side current sense mode (Register 0xFE19[7] = 1 binary).
5	VF	Feedforward/Voltage Sense/UVLO Protection. Three optional functions can be implemented with this pin: feedforward, primary side input voltage sensing, and input voltage UVLO protection. This pin is connected upstream of the output inductor through a resistor divider network. The nominal voltage at this pin should be 1 V. This signal is referred to AGND.
6	CS1	Primary Side Current Sense Input. This pin is connected to the primary side current sensing ADC and to the cycle-by-cycle current-limit comparator. This signal is referred to AGND. The resistors on this input must have a tolerance specification of ≤0.5% to allow for trimming. When not in use, connect this pin to AGND.
7	SR1	PWM Logic Output Drive. This signal is referred to AGND. When not in use, disable this pin.
8	SR2	PWM Logic Output Drive. This signal is referred to AGND. When not in use, disable this pin.
9	OUTA	PWM Logic Output Drive. This signal is referred to AGND. When not in use, disable this pin.
10	OUTB	PWM Logic Output Drive. This signal is referred to AGND. When not in use, disable this pin.
11	OUTC	PWM Logic Output Drive. This signal is referred to AGND. This pin can also be programmed as a synchronization signal output (SYNO). When not in use, disable this pin.
12	OUTD	PWM Logic Output Drive. This signal is referred to AGND. This pin can also be programmed as a synchronization signal output (SYNO). When not in use, disable this pin.
13	SYNI/FLGI	Synchronization Signal Input/External Signal Input to Generate a Flag Condition. When not in use, connect this pin to AGND.
14	SCL	I^2C/PMBus Serial Clock Input and Output (Open-Drain). This signal is referred to AGND.
15	SDA	I^2C/PMBus Serial Data Input and Output (Open-Drain). This signal is referred to AGND.
16	CTRL	PMBus Control Signal. It is recommended that a 1 nF capacitor be connected from the CTRL pin to AGND for noise debounce and decoupling. This signal is referred to AGND.

Pin No.	Mnemonic	Description
17	PG/$\overline{\text{ALT}}$	Power-Good Output (Open-Drain). Connect this pin to VDD through a pull-up resistor (typically 2.2 kΩ). This signal is referred to AGND. This pin is also used as an SMBus $\overline{\text{ALERT}}$ signal. (For information about the SMBus specification, see the PMBus Features section.)
18	VCORE	Output of the 2.6 V Regulator. Connect a decoupling capacitor of at least 330 nF from this pin to AGND, as close as possible to the ADP1052, minimizing the printed circuit board (PCB) trace length. It is recommended that this pin not be used as a reference or to generate other logic levels using resistive dividers.
19	VDD	Positive Supply Input. Voltage of 3.0 V to 3.6 V. This signal is referred to AGND. Connect a 2.2 µF decoupling capacitor from this pin to AGND, as close as possible to the ADP1052, minimizing the PCB trace length.
20	AGND	Common Analog Ground. The internal analog circuitry ground and digital circuitry ground are star connected to this pin through bonding wires.
21	RES	Resistor Input. This pin sets up the internal reference for the internal PLL frequency. Connect a 10 kΩ resistor (±0.1%) from this pin to AGND. This signal is referred to AGND.
22	ADD	Address Select Input. This pin programs the I^2C/PMBus address. Connect a resistor from ADD to AGND. This signal is referred to AGND.
23	RTD	Thermistor Input. Place a thermistor (R25 = 100 kΩ (1%), beta = 4250 (1%)) in parallel with a 16.5 kΩ (1%) resistor and a 1 nF filtering capacitor. This pin is referred to AGND. When not in use, connect this pin to AGND.
24	OVP	Overvoltage Protection. Use this signal for redundant overvoltage protection. This signal is referred to AGND.
	EP	Exposed Pad. The ADP1052 has an exposed thermal pad on the underside of the package. For increased reliability of the solder joints and maximum thermal capability, it is recommended that the exposed pad be soldered to the PCB AGND plane.

TYPICAL PERFORMANCE CHARACTERISTICS

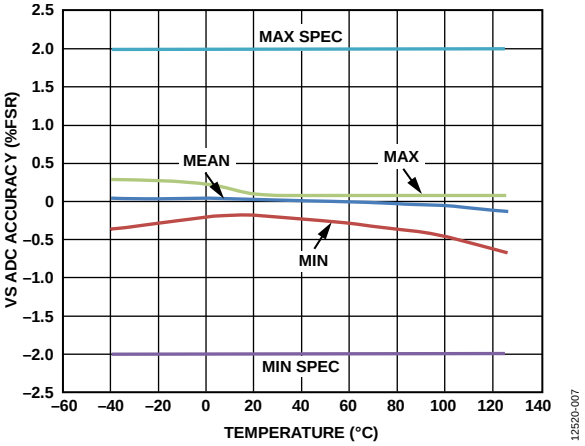

Figure 4. VS ADC Accuracy vs. Temperature (From 10% to 90% of FSR)

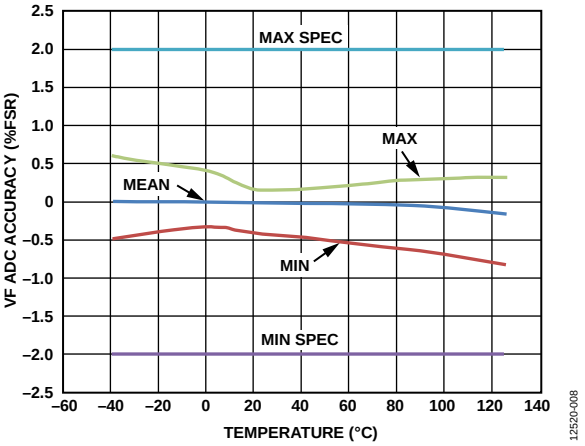

Figure 5. VF ADC Accuracy vs. Temperature (From 10% to 90% of FSR)

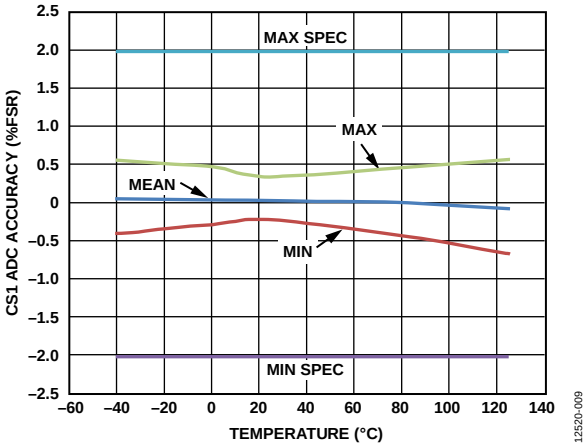

Figure 6. CS1 ADC Accuracy vs. Temperature (From 10%to 90% of FSR)

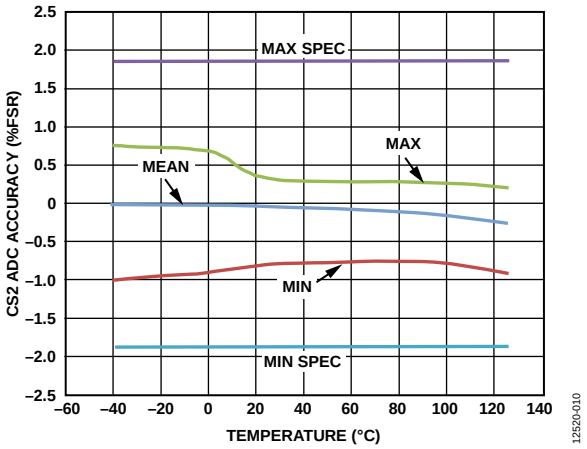

Figure 7. CS2 ADC Accuracy vs. Temperature (From 0 mV to 120 mV)

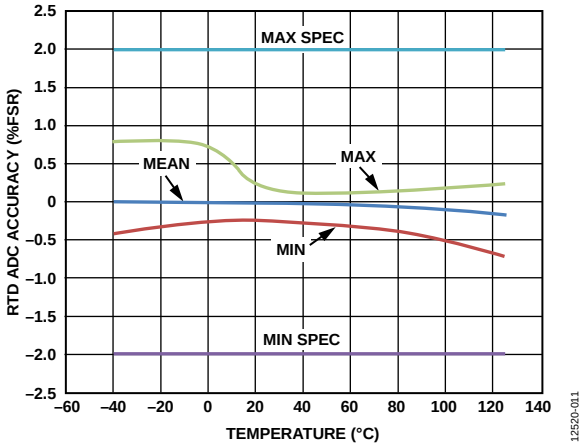

Figure 8. Resistance Temperature Detection (RTD) ADC Accuracy vs. Temperature (From 10% to 90% of FSR)

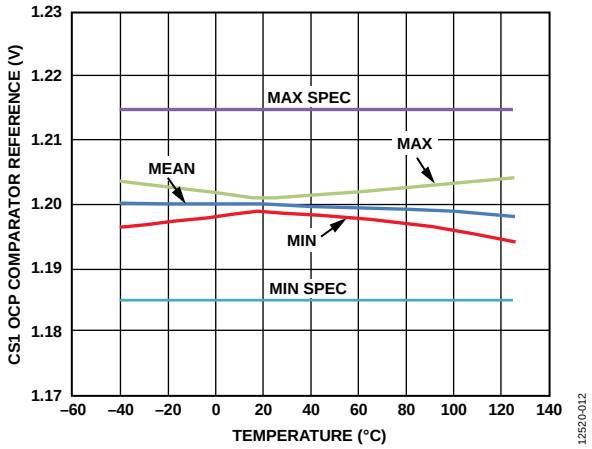

Figure 9. CS1 OCP Comparator Reference vs. Temperature (1.2 V Reference)

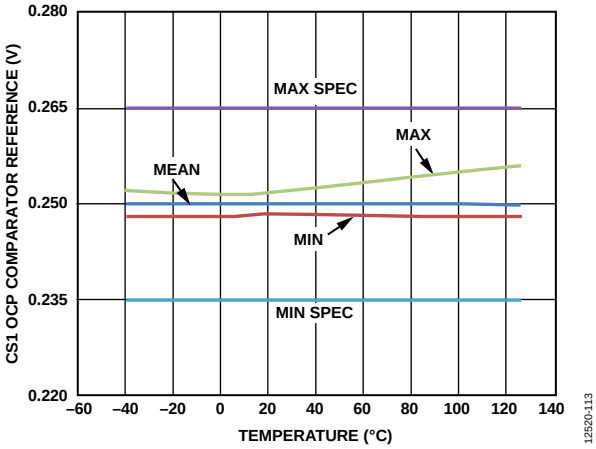

Figure 10. CS1 OCP Comparator Reference vs. Temperature (0.25 V Reference)

THEORY OF OPERATION

The ADP1052 is designed as a flexible, easy to use, digital power supply controller. The ADP1052 integrates the typical functions that control power supply, such as

- Output voltage sense and feedback
- Voltage feedforward control
- Digital loop filter compensation
- PWM generation
- Current, voltage, and temperature sense
- Housekeeping and I²C/PMBus interface
- Calibration and trimming

The main function of controlling the output voltage is through the feedback ADCs, the digital loop compensator, and the digital PWM engine.

The feedback ADCs feature a patented multipath architecture, with a high speed, low resolution (fast and coarse) ADC and a low speed, high resolution (slow and accurate) ADC. The ADC outputs are combined to form a high speed and high resolution feedback path. Loop compensation is implemented using the digital compensator. This proportional, integral, derivative (PID) compensator is implemented in the digital domain to allow easy programming of filter characteristics, which is of great value in customizing and debugging designs. The PWM engine generates up to six programmable PWM outputs for control of primary side FET drivers and synchronous rectification FET drivers. This programmability allows many generic and specific switching power supply topologies to be realized.

Conventional power supply housekeeping features, such as input voltage sense, output voltage sense, primary side current sense, and secondary side current sense, are included. The device offers an extensive set of protections, including overvoltage protection (OVP), overcurrent protection (OCP), overtemperature protection (OTP), undervoltage protection (UVP), and synchronous rectifier (SR) reverse current protection (RCP).

All of these features are programmable through the I²C/PMBus digital bus interface. This interface is also used for calibrations. Other information, such as input current, output current, and fault flags, is also available through this digital bus interface.

The internal EEPROM can store all programmed values and allows standalone control without a microcontroller. A free, downloadable GUI is available that provides all the necessary software to program the ADP1052. To obtain the latest GUI software and a user guide, visit http://www.analog.com/digitalpower.

The ADP1052 operates from a single 3.3 V power supply and is specified from −40°C to +125°C.

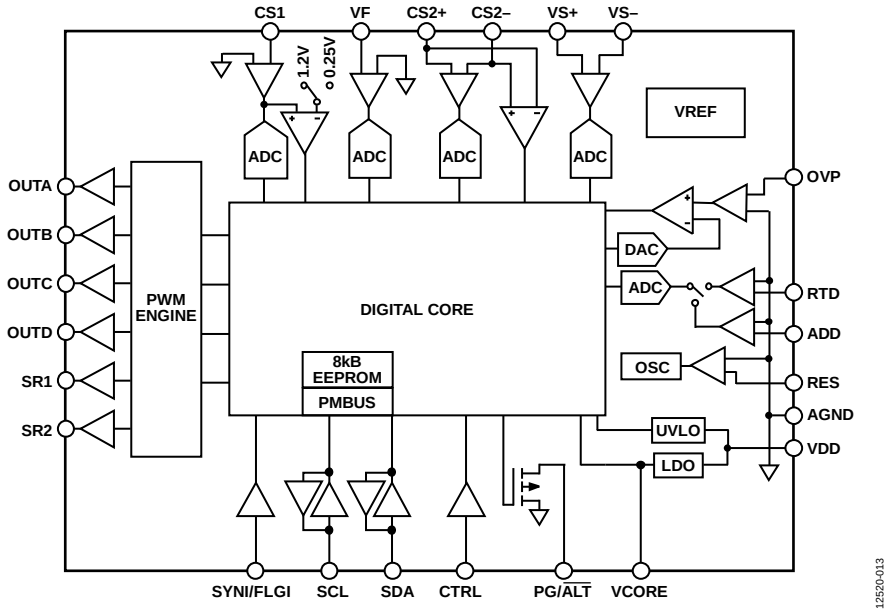

Figure 11. Functional Block Diagram

PWM OUTPUTS (OUTA, OUTB, OUTC, OUTD, SR1, AND SR2)

The PWM outputs control the primary side drivers and the synchronous rectifier drivers. They can be used for several topologies, such as hard-switched full bridge, zero-voltage-switched full bridge, phase shifted full bridge, half bridge, push pull, two-switch forward, active clamp forward, and interleaved buck. Delays between rising and falling edges are individually programmable. Special care is required to avoid shoot through and cross conduction. The ADP1052 GUI software is recommended to program these outputs.

Figure 12 shows an example configuration to drive a zero-voltage-switched full bridge topology with synchronous rectification. The QA, QB, QC, QD, QSR1, and QSR2 switches are driven separately by the PWM outputs (OUTA, OUTB, OUTC, OUTD, SR1, and SR2). Figure 13 shows an example of PWM settings for the power stage shown in Figure 12.

All PWM and SRx outputs are synchronized with each other. Therefore, when reprogramming more than one of these outputs, it is important to first update all of the registers and then latch the information into the shadow registers simultaneously. During the reprogramming operation, the outputs are temporarily disabled.

To ensure that new PWM timings and the switching frequency setting are programmed simultaneously, a special instruction is sent to the ADP1052 by setting Register 0xFE61[2:1] (the GO commands, see Table 181). It is recommended to disable the PWM outputs that are not in use via Register 0xFE53[5:0]. See the PWM Outputs Timing Registers section for additional information about the PWM timings.

SYNCHRONOUS RECTIFICATION

SR1 and SR2 are recommended to serve as the PWM control signals when synchronous rectification is in use. These PWM signals can be configured much like the other PWM outputs.

An optional soft start can be applied to the SR PWM outputs. Use Register 0xFE08[4:0] to program the SR soft start.

When the SR soft start is disabled (Register 0xFE08[1:0] = 00), the SRx pin signals are immediately turned on to their modulated PWM duty cycle values.

When the SR soft start is enabled (Register 0xFE08[1:0] = 11), the SR1 and SR2 rising edges move left from the t_{RX} + t_{MODU_LIMIT} position to the t_{RX} + $t_{MODULATION}$ position in steps that are set in Register 0xFE08[3:2]. In these positions, t_{RX} represents the rising edge timing of SR1 (t_{R5}) and the rising edge timing of SR2 (t_{R6}) (see Figure 68); t_{MODU_LIMIT} represents the modulation limit defined in Register 0xFE3C (see Figure 67); $t_{MODULATION}$ represents the real-time modulation value.

The SR soft start is applicable even when the SR1 and SR2 pins are not programmed for modulation. When the SR soft start is enabled, the SR1 and SR2 rising edges move left from the t_{RX} + t_{MODU_LIMIT} position to the t_{RX} position in steps that are set in Register 0xFE08[3:2].

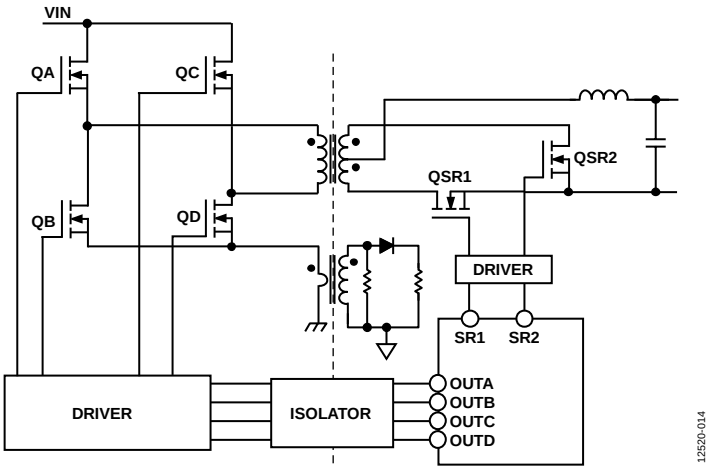

Figure 12. PWM Assignment for Zero-Voltage-Switched Full Bridge Topology with Synchronous Rectification

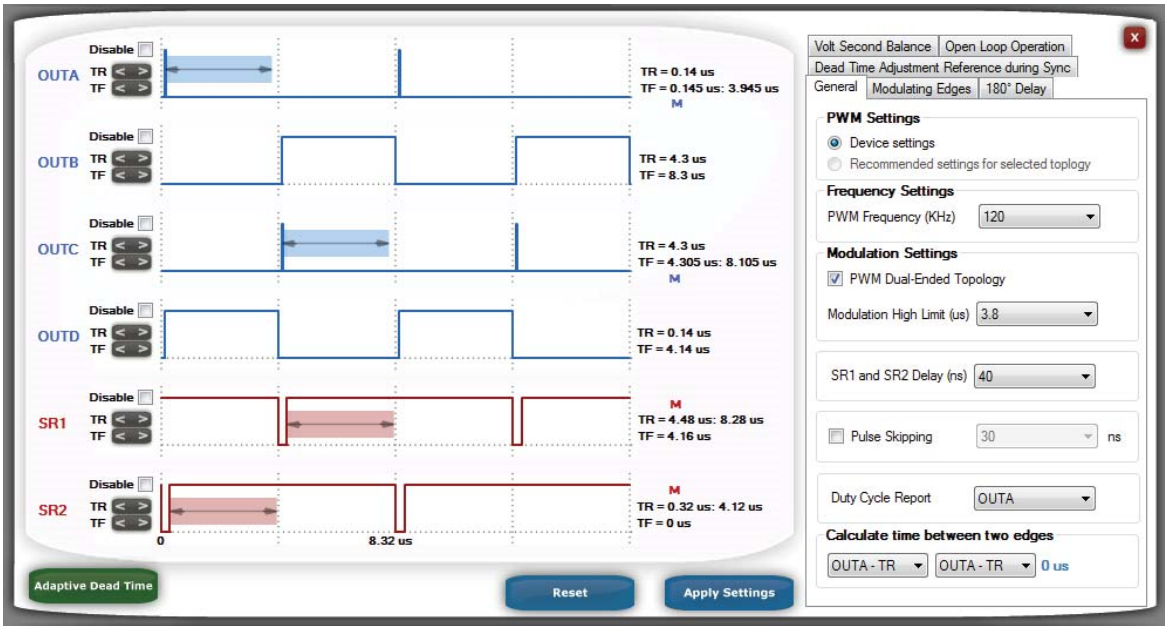

Figure 13. PWM Settings for Zero-Voltage-Switched Full Bridge Topology with Synchronous Rectification Using the ADP1052 GUI

The advantage of the SR soft start is that it minimizes the output voltage undershoot that occurs when the SR FETs are turned on without a soft start. The advantage of immediately and completely turning on the SRx signals is that they help minimize the voltage transient caused during a load step.

Using Register 0xFE08[4], the SR soft start can be programmed to occur one time only (the first time that the SRx signals are enabled) or every time that the SRx signals are enabled (for example, when the system enters or exits deep light load mode).

When programming the ADP1052 to use the SR soft start, ensure the correct operation of this function by setting the falling edge of SR1 (t_{F5}) to a lower value than the rising edge of SR1 (t_{R5}) and setting the falling edge of SR2 (t_{F6}) to a lower value than the rising edge of SR2 (t_{R6}). During the SR soft start, the rising edges of SRx move gradually from the right side (the t_{RX} + t_{MODU_LIMIT} position) to the left side to increase the duty cycle.

The ADP1052 is well suited for dc-to-dc converters in isolated topologies. Every time a PWM signal crosses the isolation barrier, a propagation delay is added because of the isolating components. Using Register 0xFE3A[5:0], an adjustable delay (0 ns to 315 ns in steps of 5 ns) can be programmed to move both SR1 and SR2 later in time to compensate for the added propagation delay. In this way, all the PWM edges can be aligned (see Figure 68).

PWM MODULATION LIMIT AND 180° PHASE SHIFT

The modulation limit register (Register 0xFE3C, see Table 159) can be programmed to apply a maximum modulation limit to any PWM signal, thus limiting the modulation range of any PWM output. If modulation is enabled, the maximum modulation limit is applied to all PWM outputs collectively. This limit, t_{MODU_LIMIT}, is the maximum time variation for the modulated edges from the default timing, following the configured modulation direction (see Figure 14).

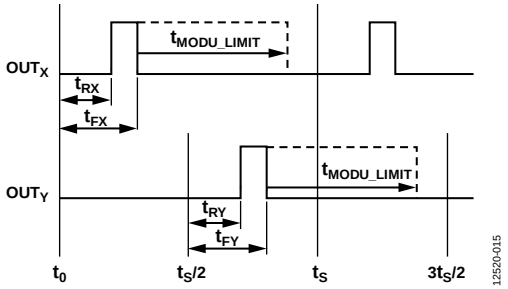

Figure 14. Setting Modulation Limits

There is no setting for the minimum duty cycle limit. Therefore, the user must set the rising edges and falling edges based on the case with the least amount of modulation.

Each least significant bit (LSB) in Register 0xFE3C corresponds to a different time step size, depending on the switching frequency (see Table 159). If the ADP1052 is to control a dual-ended topology (such as full bridge, half bridge, or push pull), enable the dual-ended topology mode using Register 0xFE13[6]; thus, the modulation limit in each half cycle is one half of the modulation value programmed by Register 0xFE3C.

The modulated edges cannot go beyond one switching cycle. To extend the modulation range for some applications, the 180° phase shift can be enabled using Register 0xFE3B[5:0].

When the 180° phase shift is disabled, the rising edge timing and the falling edge timing are referred to the start of the switching cycle (see t_{RX} and t_{FX} in Figure 14). When the 180° phase shift is enabled, the rising edge timing and the falling edge timing are referred to half of the switching cycle (see t_{RY} and t_{FY} in Figure 14, which are referred to $t_S/2$). Therefore, when the 180° phase shift

is disabled, the edges are always located between t_0 and t_S. When the 180° phase shift is enabled, the edges are located between $t_S/2$ and $3t_S/2$.

Use the 180° phase shift function to extend the maximum duty cycle in a multiphase, interleaved converter. Figure 15 shows a dual-phase, interleaved buck converter. The OUTC and OUTD PWM outputs are programmed as a 180° phase shift with the OUTA and OUTB PWM outputs.

Use the phase shedding function for light load efficiency improvement. See the Light Load Mode and Deep Light Load Mode section for more information. The ADP1052 GUI is recommended for evaluating this feature.

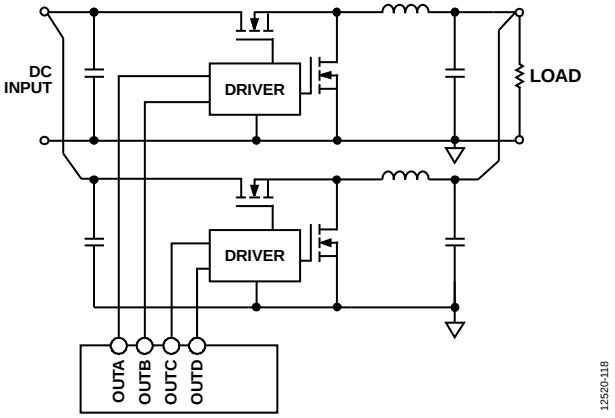

Figure 15. Dual-Phase Interleaved Buck Converter Controlled by the ADP1052

ADAPTIVE DEAD TIME COMPENSATION (ADTC)

The ADTC registers (Register 0xFE5A to Register 0xFE60 and Register 0xFE66) allow the dead time between the PWM edges to be adapted on the fly. The ADP1052 uses the ADTC function only when the CS1 current value (which represents the input current) falls below the ADTC threshold (programmed in Register 0xFE5A, see Table 174). The ADP1052 GUI allows the user to program the dead time values easily, and it is recommended to use the GUI for this purpose.

Before configuring the ADTC, its threshold must be programmed. Each individual PWM rising and falling edge (t_{RX} and t_{FX}) can then be programmed (Register 0xFE5B to Register 0xFE60) to have a specific dead time offset at a CS1 current of 0 A.

This offset can be positive or negative and is relative to the nominal edge position. When the CS1 current is between 0 A and the ADTC threshold, the amount of dead time is linearly adjusted in steps of 5 ns.

The averaging period of the CS1 current and the speed of the dead time adjustment can also be programmed in Register 0xFE66 to accommodate faster or slower adjustment.

For example, if the ADTC threshold is set to 0.8 A, t_{R1} has a nominal rising edge of 100 ns. If the ADTC offset setting for t_{R1} is 100 ns at a CS1 current of 0 A, t_{R1} moves to 200 ns when the CS1 current is 0 A and to 150 ns when the CS1 current is 0.4 A. Similarly, the ADTC can be applied in the negative direction.

LIGHT LOAD MODE AND DEEP LIGHT LOAD MODE

To facilitate efficiency over the load range, the following three operation modes can be configured in the ADP1052, according to the voltage on the CS2± pins (to delineate this voltage from the pins, this data sheet refers to this voltage as the CS2 current, or sometimes the CS2 threshold):

- Normal mode. In normal mode, the SR PWM outputs are in complement with the primary PWM outputs.
- Light load mode. The SR PWM outputs work, but they are in phase with the primary PWMs.
- Deep light load mode. All PWM outputs can be disabled.

Figure 16 shows the operation timing of a hard switched, full bridge converter. When the CS2 current (output current) drops across the light load mode threshold programmed by Register 0xFE19[3:0], the SR1 and SR2 PWM signals switch from complementary mode (normal mode) to in-phase mode (light load mode), as shown in Figure 16.

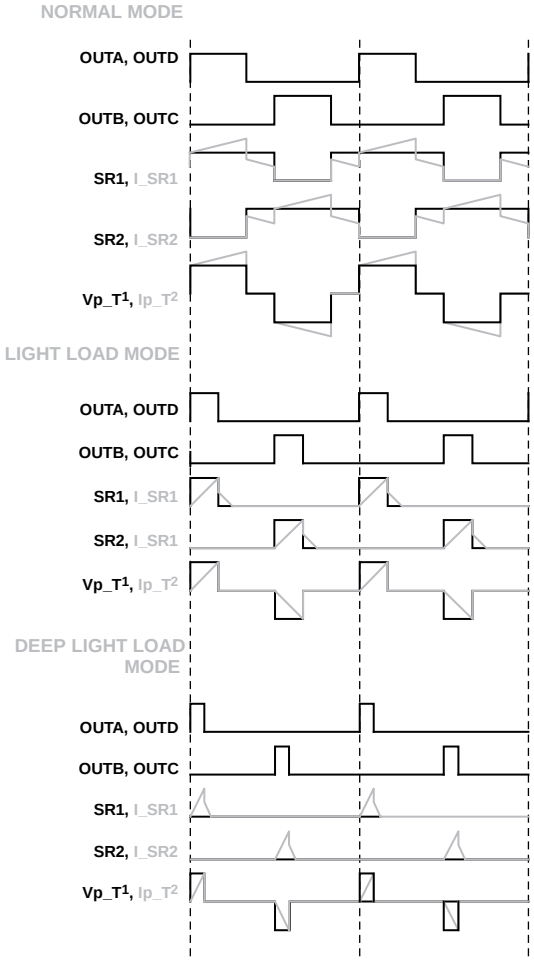

Figure 16. Light Load Mode and Deep Light Load Mode

To achieve normal operation of light load mode, keep in mind the following:

In a hard switched, full bridge topology having the same power stage as shown in Figure 12, if QA to QD are driven by OUTA to OUTD separately, program the SR1 output in complement with OUTB and OUTC in normal mode, and program the SR2 output in complement with OUTA and OUTD (as shown in Figure 16). In this case, the OUTA to OUTD outputs are all modulated.

In a zero-voltage-switched full bridge topology having the same power stage shown in Figure 12 and the PWM settings shown in Figure 13, SR1 is in complement with OUTC and SR2 is in complement with OUTA in normal mode. In light load mode, SR1 is in phase with OUTA, and SR2 is in phase with OUTC.

If using the hard switched full bridge, half bridge, and push pull topologies and the primary switches are controlled by OUTA and OUTB only, SR1 is in complement with OUTB, and SR2 is in complement with OUTA in normal mode. Then, in the light load mode, SR1 is in phase with OUTA, and SR2 is in phase with OUTB.

When the CS2 current drops across the deep light load mode threshold programmed by Register 0xFE1B[3:0], all PWM channels can be disabled by Register 0xFE1C[5:0]. This allows use of the ADP1052 in interleaved topologies, incorporating the automatic phase shedding function in light load mode.

In both light load mode and deep light load mode, the CS2 averaging speed for the threshold can be set from 41 µs to 328 µs in four discrete steps, using Register 0xFE1E[5:4]. Set the hysteresis in Register 0xFE1E[3:2].

The light load mode digital compensator is also used during light load mode and deep light load mode.

FREQUENCY SYNCHRONIZATION

The frequency synchronizing function of the ADP1052 includes the synchronization input (SYNI function of SYNI/FLGI) as a slave device and the synchronization output (SYNO, using the OUTC or OUTD pin) as a master device.

Synchronization as a Slave Device

The ADP1052 can be programmed to take the SYNI/FLGI pin signal as the reference to synchronize the internal programmed PWM clock with an external clock. Note that where the SYNI or the FLGI function only of the SYNI/FLGI pin is referenced, the pin name reflects the relevant function only (see the Pin Configuration and Function Descriptions section for full pin mnemonics and descriptions).

The frequency capture range requirement is for the period of the external clock that is applied at the SYNI pin to be 90% to 110% of the period of the internal programmed PWM clock. The minimum pulse width of the SYNI signal is 360 ns. From the rising edge of the SYNI signal to the start of the internal clock cycle, there is a 760 ns propagation delay. Additional delay time is programmed, using Register 0xFE11, to realize interleaving control with different controllers.

To achieve a smooth synchronization transition between asynchronous operation and synchronous operation, there is a phase capture range bit for synchronization in Register 0xFE12[6] for capturing the phase of the external clock signal. The ADP1052 detects the phase shift between the external clock signal and the internal clock signal when synchronization is enabled. When the phase shift falls within the phase capture range, synchronization begins.

The ADP1052 synchronizes to the external clock frequency as follows:

1. Bit 3 and Bit 0 in Register 0xFE12 enable the synchronization function; the ADP1052 starts to detect the period of the external clock signal applied at the SYNI/FLGI pin.
2. If all the periods of the consecutive 64 most recent cycles of the external clocks fall within 90% to 110% of the internal switching clock period, the ADP1052 uses the latest current cycle as the synchronization reference, and the period of the external clock is identified. This interval is t_2 or t_4, as shown in Figure 17. Otherwise, the ADP1052 discards this cycle and looks for the next cycle (frequency capture mode).
3. After the external clock period is determined, the ADP1052 detects the phase shift between the external clock (plus the delay time set by Register 0xFE11) and the internal PWM signal. If the phase shift is within the phase capture range, the internal and external clocks are synchronized (phase capture mode).
4. At this point, the PWM clock is synchronized with the external clock. Cycle-by-cycle synchronization starts.
5. If the external clock signal is lost at any time, or if the period exceeds the minimum limit (89% of the internal programmed frequency) or the maximum limit (114% of the internal programmed frequency), the ADP1052 takes the last valid external clock signal as the synchronization reference source. At the same time, the phase shift between the synchronization reference and the internal clock is detected. When the phase shift falls within the phase capture range, the PWM clock returns to the internal clock set by the internal oscillator. This interval is t_1 or t_3, as shown in Figure 17.

   This is the first synchronization unlock condition, called Synchronization Unlocked Mode 1, in which the switching frequency is out of range (range is 89% to approximately 114% of the internal programmed frequency).
6. If the period of the external SYNI signal changes significantly (for example, if the period difference between contiguous cycles exceeds 280 ns), the ADP1052 adopts the last valid external clock signal for the synchronization reference source. At the same time, the phase shift between the synchronization reference and the internal clock is detected. When the phase shift falls within the phase capture range, the PWM clock returns to the internal clock

set by the internal oscillator. This is the second synchronization unlock condition, called Synchronization Unlocked Mode 2, in which the phase shift exceeds 280 ns.

Figure 17 shows the synchronous operation. The internal frequency, f_{SW_INT}, is the internal free running frequency of the ADP1052. Before the synchronization is locked, the ADP1052 runs at f_{SW_INT}. The external frequency, f_{SW_EXT}, is the frequency of the external clock that the ADP1052 needs to synchronize. After synchronization is locked, the ADP1052 runs at f_{SW_EXT}.

The ADP1052 does not allow the switching frequency to run across the boundaries of 97.5 kHz, 195.5 kHz, or 390.5 kHz on-the-fly. Ensure that the external clock does not run across these boundaries; otherwise, the internal switching frequency cannot be set within ±10% of these boundaries.

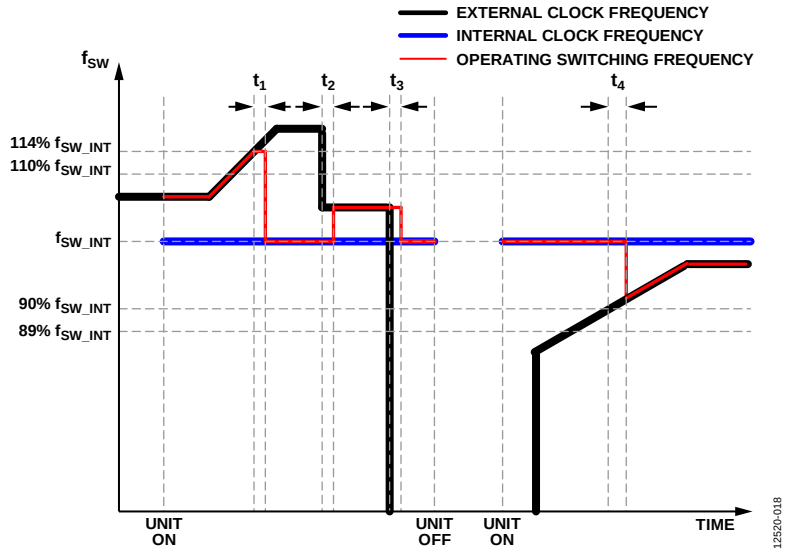

Figure 17. Synchronization Operation

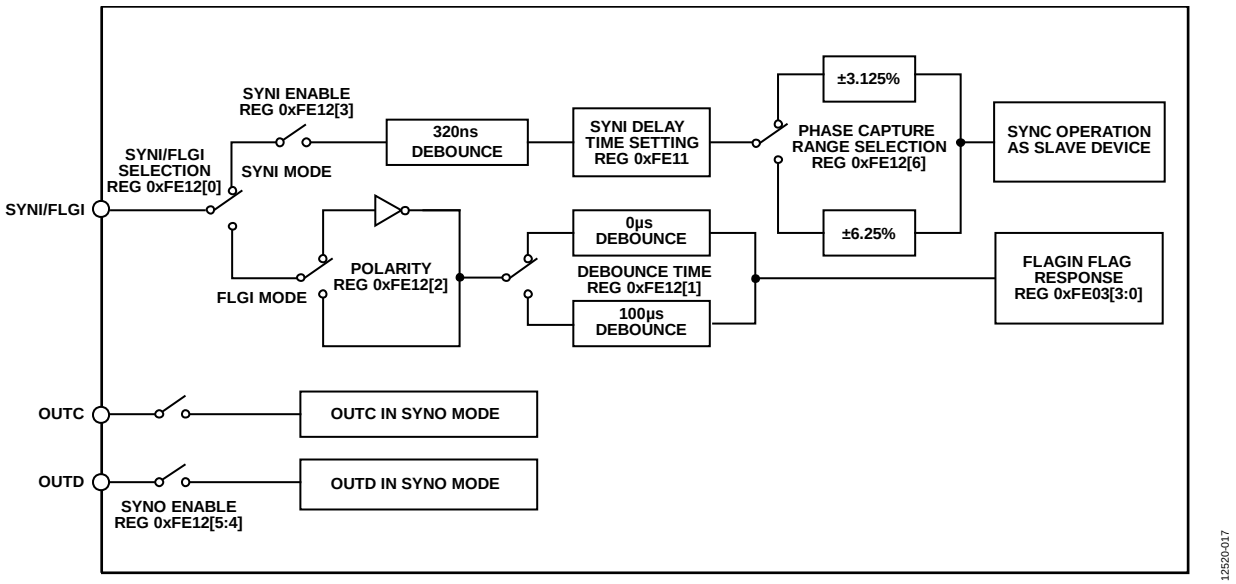

Figure 18. Synchronization Configuration

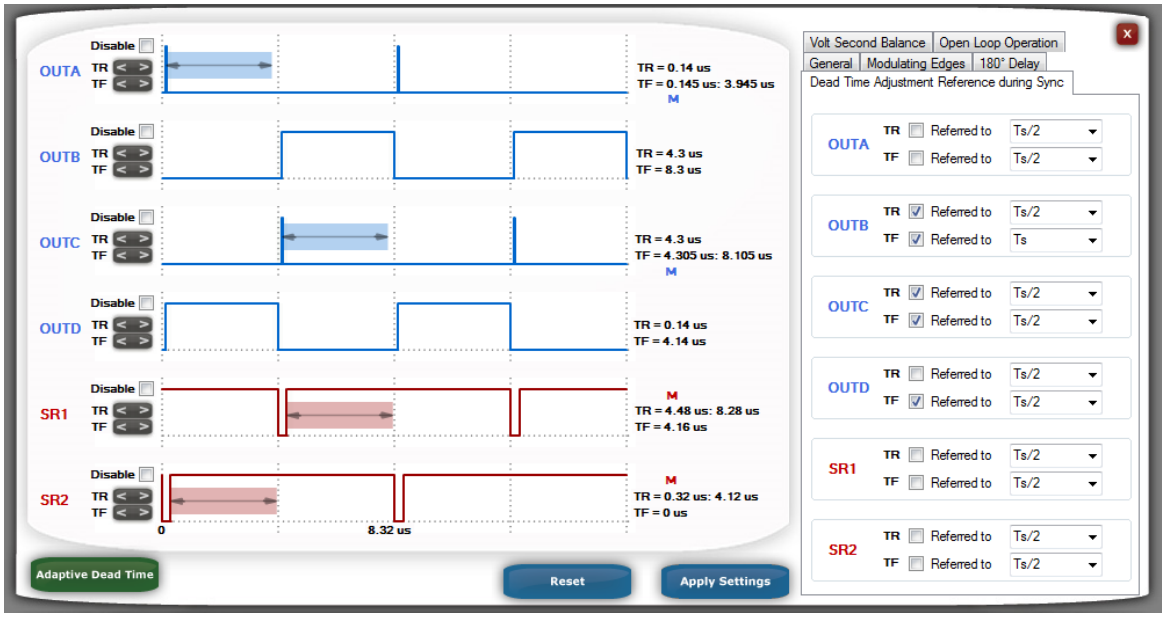

Figure 19. Edge Adjustment Reference During Synchronization

To ensure a constant dead time before and after synchronization, Register 0xFE6D to Register 0xFE6F can be set for edge adjustment referred to $t_S/2$ or t_S. For example, the falling edge of OUTA (t_{F1}) is referred to the ½ × t_S position, which means that the time difference between t_{F1} and ½ × t_S is a constant during synchronization transition. Figure 19 shows an example of the edge adjustment reference settings in a full bridge topology.

Synchronization as a Master Device

Use Register 0xFE12[5:4] to program the synchronization output (SYNO) function, in which the OUTC pin (Pin 11) or the OUTD pin (Pin 12) generates a synchronization reference clock output. When Bit 4 is set, OUTC generates a 640 ns pulse width clock signal that represents the internal switching frequency. When Bit 5 is set, OUTD generates a 640 ns pulse width clock signal that also represents the internal switching frequency.

To compensate the propagation delays in the synchronization scheme of the ADP1052, the synchronization output signal has a 760 ns lead time before the start of the internal switching cycle.

The synchronization output signal is always available when VDD is applied. The VDD_OV fault is the only fault condition that suspends the synchronization output signal.

OUTPUT VOLTAGE SENSE AND ADJUSTMENT

The output voltage sense and adjustment function is used for control, monitoring, and undervoltage protection of the remote output voltage. VS− (Pin 1) and VS+ (Pin 2) are fully differential inputs. The voltage sense point can be calibrated digitally to remove any errors due to external components. This calibration can be performed in the production environment, and the settings stored in the EEPROM of the ADP1052 (see the Power Supply Calibration and Trim section for more information).

For voltage monitoring, the READ_VOUT output voltage command (Register 0x8B) is updated every 10 ms. The ADP1052 stores every ADC sample for 10 ms and then calculates the average value at the end of the 10 ms period. Therefore, if Register 0x8B is read at least every 10 ms, a true average value is obtained. The voltage information is available through the I²C/PMBus interface.

The control loop of the ADP1052 features a patented multipath architecture. The output voltage is converted simultaneously by two ADCs: a high accuracy ADC and a high speed ADC. To provide a high performance and cost competitive solution, the complete signal is reconstructed and processed in the digital compensator.

Voltage Feedback Sensing (VS+, VS− Pins)

The output voltage feedback sense point on the power rail requires an external resistor divider (R1 and R2 in Figure 20) to bring the nominal differential mode signal to 1 V between the VS+ and VS− pins (see Figure 20). This external resistor divider is necessary because the VS ADC input range of the ADP1052 is 0 V to 1.6 V. When R1 and R2 are known, the VOUT_SCALE_LOOP parameter can be calculated using the following equation:

$$VOUT_SCALE_LOOP = R2/(R1 + R2)$$

In a 12 V system with resistor dividers of 11 kΩ and 1 kΩ, the VOUT_SCALE_LOOP can be calculated as follows:

$$VOUT_SCALE_LOOP = 1\ k\Omega/(11\ k\Omega + 1\ k\Omega) = 0.08333$$

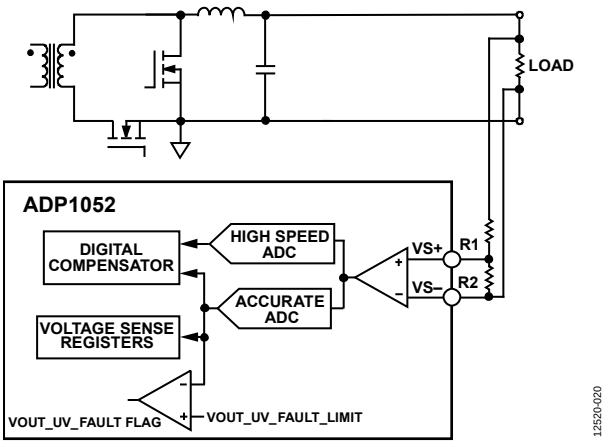

Figure 20. Voltage Sense Configuration

Voltage Sense ADCs

Two varieties of sigma-delta (Σ-Δ) ADCs are used in the ADP1052 feedback loop, as follows:

- Low frequency ADC, running at 1.56 MHz
- High frequency ADC, running at 25 MHz

The Σ-Δ ADCs have a resolution of one bit and operate differently from traditional flash ADCs. The equivalent resolution that can be obtained depends on the length of time the output bit stream of the Σ-Δ ADC is filtered.

The Σ-Δ ADCs also differ from Nyquist rate ADCs in that the quantization noise is not uniform across the frequency spectrum. At lower frequencies, the noise decreases. At higher frequencies, the noise increases (see Figure 21).

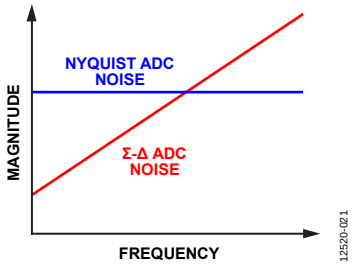

Figure 21. ADC Noise Performance

The low frequency ADC runs at approximately 1.56 MHz. For a specified bandwidth, the equivalent resolution is calculated as

$$\ln(1.56\ \text{MHz}/BW)/\ln(2) = N\ \text{bits}$$

For example, at a bandwidth of 95 Hz, the equivalent resolution/noise is

$$\ln(1.56\ \text{MHz}/95\ \text{Hz})/\ln(2) = 14\ \text{bits}$$

At a bandwidth of 1.5 kHz, the equivalent resolution/noise is

$$\ln(1.56\ \text{MHz}/1.5\ \text{kHz})/\ln(2) = 10\ \text{bits}$$

The high frequency ADC has a 25 MHz clock. It is comb filtered and outputs at the switching frequency into the digital compensator. See Table 5 for the equivalent resolution at selected sampling frequencies.

Table 5. Equivalent Resolutions for High Frequency ADC at Selected Switching Frequencies

f_{SW} (kHz)	High Frequency ADC Resolution (Bits)
49 to 87	9
97.5 to 184	8
195.5 to 379	7
390.5 to 625	6

The high frequency ADC has a range of ±25 mV. Using a base switching frequency of 97.5 kHz at an 8-bit high frequency ADC resolution, the quantization noise is 0.195 mV.

$$1\ \text{LSB} = 2 \times 25\ \text{mV}/2^8 = 0.195\ \text{mV}$$

When the switching frequency increases to 195.5 kHz at a 7-bit high frequency ADC resolution, the quantization noise is 0.391 mV ($1\ \text{LSB} = 2 \times 25\ \text{mV}/2^7 = 0.391\ \text{mV}$). Increasing the switching frequency to 390.5 kHz increases the quantization noise to 0.781 mV, as follows:

$$1\ \text{LSB} = 2 \times 25\ \text{mV}/2^6 = 0.781\ \text{mV}$$

Output Voltage Adjustment Commands

In the ADP1052, the voltage data for commanding or reading the output voltage or related parameters is in linear data format. The linear format exponent is fixed at −10 decimal (see the VOUT_MODE command, Register 0x20, in Table 22).

The following three basic commands are used for setting the output voltage:

- VOUT_COMMAND command (Register 0x21, Table 23)
- VOUT_MARGIN_HIGH command (Register 0x25, Table 27)
- VOUT_MARGIN_LOW command (Register 0x26, Table 28)

One of these three values is selected by the OPERATION command (Register 0x01, Table 14).

The VOUT_MAX command (Register 0x24, Table 26) sets an upper limit on the output voltage that the ADP1052 can command, regardless of any other commands or combinations.

During output voltage adjustment, use the VOUT_TRANSITION_RATE command (Register 0x27, Table 29) to set the rate (in mV/µs) at which the VS± pins change voltage.

DIGITAL COMPENSATOR

Use the internal programmable digital compensator to change the control loop of the power supply. A Type III digital compensator architecture is implemented in this device. This Type III compensator is reconstructed by a low frequency filter with input from the low frequency ADC and a high frequency filter with input from the high frequency ADC.

From the voltage sense ADC outputs to the digital compensator output, the transfer function of the digital compensator in z-domain is as follows:

$$H(z) = \frac{d}{204.8 \times m} \times \frac{z}{z-1} + \frac{c}{12.8} \times \frac{z-b}{z-a}$$

where:
d = low frequency filter gain register values (Register 0xFE30 for normal mode or Register 0xFE34 for light load mode).
m is the scale factor, as follows:

m = 1 when 49 kHz ≤ f_{SW} < 97.5 kHz.
m = 2 when 97.5 kHz ≤ f_{SW} < 195.5 kHz.
m = 4 when 195.5 kHz ≤ f_{SW} < 390.5 kHz.
m = 8 when 390.5 kHz ≤ f_{SW}.

c = high frequency filter gain register values (Register 0xFE33 for normal mode or Register 0xFE37 for light load mode).
b = high frequency filter zero register values ÷ 256 (Register 0xFE31 ÷ 256 for normal mode or Register 0xFE35 ÷ 256 for light load mode).
a = high frequency filter pole register values ÷ 256 (Register 0xFE32 ÷ 256 for normal mode or Register 0xFE36 ÷ 256 for light load mode).

To tailor the loop response to the specific application, set up the low frequency gain (represented by d), the zero location of the high frequency filter (represented by b), the pole location of the high frequency filter (represented by a), and the high frequency gain (represented by c). These can all be set up individually (see the Digital Compensator and Modulation Setting Registers section).

It is recommended that the ADP1052 GUI be used to program the compensator. The GUI displays the filter response, using a Bode plot in the s-domain, and calculates all stability criteria for the power supply.

To transfer the z-domain value to the s-domain, plug the following bilinear transformation equation into the H(z) equation:

$$z(s) = \frac{2f_{SW} + s}{2f_{SW} - s}$$

The filter introduces an extra phase delay element into the control loop. The digital compensator circuit sends the information about the duty cycle to the digital PWM engine at the beginning of each switching cycle (unlike an analog controller, which makes decisions on the duty cycle information continuously). There is an additional delay for ADC sampling and decimation filtering. This extra phase delay for phase margin (Φ) is expressed as follows:

$$\Phi = 360 \times f_C/f_{SW}$$

where f_C is the crossover frequency and f_{SW} is the switching frequency.

At one-tenth of the switching frequency, the phase delay is 36°. The GUI incorporates this phase delay into its calculations.

Note that the ADP1052 GUI does not account for other delays, such as gate driver and propagation delays.

Two sets of registers allow for two distinct compensator responses. The main compensator, called the normal mode compensator, is controlled by programming Register 0xFE30 to Register 0xFE33. The light load mode compensator is controlled by programming Register 0xFE34 to Register 0xFE37. The ADP1052 uses the light load mode compensator only when it operates in light load mode or deep light load mode.

In addition, a dedicated filter is used during soft start. The filter is disabled at the end of the soft start routine, after which time the voltage loop digital compensator is used. The soft start filter gain is a programmable value of 1, 2, 4, or 8, using Bits[1:0] in Register 0xFE3D.

CLOSED-LOOP INPUT, VOLTAGE FEEDFORWARD CONTROL, AND VF SENSE

The ADP1052 supports closed-loop input, voltage feedforward control to improve input transient performance. The voltage feedforward (VF) value is sensed by the feedforward ADC and divides the output of the digital compensator; the result is fed into the digital PWM engine. The input voltage signal can be sensed at the center tap in the secondary windings of the isolation transformer and must be filtered by a residual current device (RCD) circuit network to eliminate the voltage spike at the switching node. Alternatively, the input voltage signal can be sensed from a winding of the auxiliary power transformer.

The VF pin voltage (Pin 5) must be set to 1 V when the nominal input voltage is applied. The feedforward ADC sampling period is 10 µs. Therefore, the decision to modify the PWM outputs, based on the input voltage, is performed at this rate.

As shown in Figure 22, the feedforward scheme modifies the modulation value, based on the VF voltage. When the VF input is 1 V, the line voltage feedforward has no effect. For example, if the digital compensator output remains unchanged and the VF voltage changes to 50% of its original value (still greater than 0.5 V), the modulation of the edges of OUTx (that are configured for modulation) doubles.

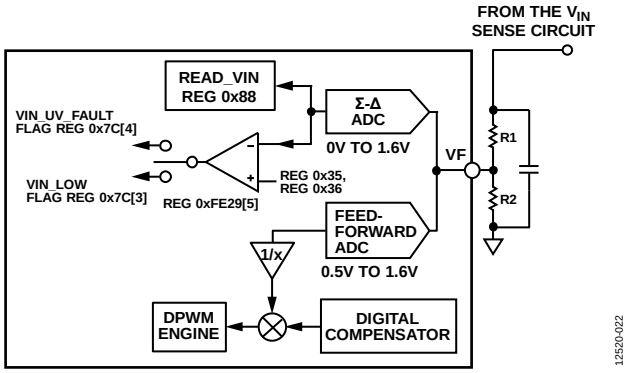

Figure 22. Closed-Loop Input Voltage Feedforward Configuration

As shown in Figure 23, if the digital compensator output remains unchanged and the VF voltage changes to 200% of its original value (still smaller than 1.6 V), the modulation of the OUTx edges (that are configured for modulation) is divided by 2. Use Register 0xFE3D, Bits[3:2] to program the optional input voltage feedforward function.

The VF pin also has a low speed, high resolution Σ-Δ ADC. The ADC has an update rate of 800 Hz with 11-bit resolution. The ADC output value is stored in Register 0xFEAC and converted to the READ_VIN command (Register 0x88). This value provides information for the input voltage monitoring and flag functions.

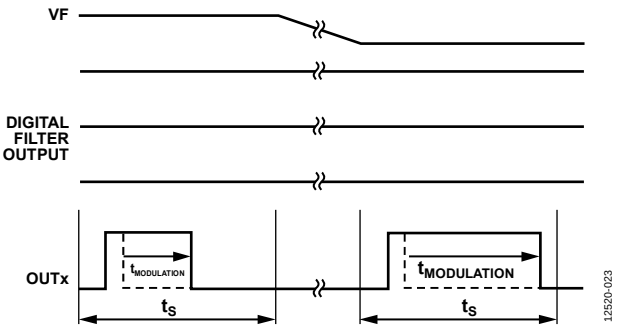

Figure 23. Closed-Loop Input Voltage Feedforward Changes Modulation Values

OPEN-LOOP INPUT, VF OPERATION

The ADP1052 can run in open-loop input voltage feedforward operation mode. In this mode, the input voltage is sensed as the feedforward signal for generation of the PWM outputs.

As shown in Figure 24, the digital compensator output is modified by a programmable modulation reference.

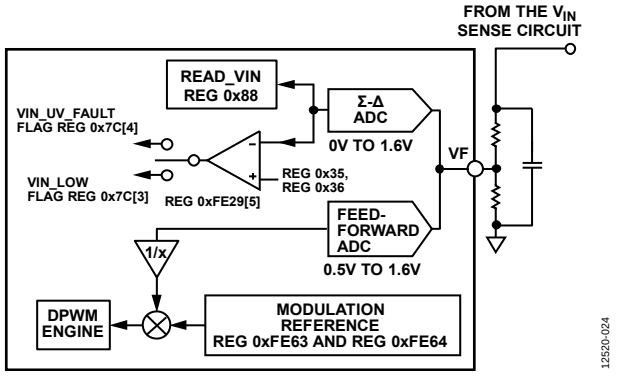

Figure 24. Open-Loop Feedforward Operation

The VF value, which represents the input voltage, is fed into the feedforward ADC to divide the modulation reference. The result of this division is then fed into the PWM engine. The duty cycle value is in inverse proportion to the input voltage.

Using the following equations:

$$D = \frac{V_{IN_NOM}}{V_{IN}} \times (t_{REF} \times f_{SW})$$

and

$$V_{OUT} = \frac{V_{IN} \times D}{n}$$

where D is the duty cycle value and V_{OUT} is the output voltage.

The output voltage can be derived by

$$V_{OUT} = \frac{V_{IN_NOM} \times (t_{REF} \times f_{SW})}{n}$$

where:
V_{IN_NOM} is the nominal input voltage.
V_{IN} is the input voltage.
t_{REF} is the modulation reference, which is set by Register 0xFE63 and Register 0xFE64.
f_{SW} is the switching frequency.
n is the turn ratio of the main transformer.

In the equation to derive V_{OUT}, the input voltage, V_{IN}, is cancelled out. Therefore, the output voltage does not change when the input voltage changes.

Register 0xFE63 and Register 0xFE64 set the modulation reference, based on the target output voltage and the nominal input voltage at which the VF pin voltage is 1 V (see Figure 24).

The PWM settings of open-loop input VF operation are similar to those of general closed-loop operation. The falling edge timings, rising edge timings, and modulation are set in the same manner as for closed-loop operation, by using Register 0xFE3E to Register 0xFE52.

- Register 0xFE09[4:3] sets the soft start speed of the modulation edges.
- Register 0xFE3D[6] enables open-loop feedforward operation.
- Register 0xFE3D[7] enables the soft start procedure of open-loop feedforward operation.

The flag settings of open-loop input VF operation are also similar to those of general closed-loop operation.

Because the output voltage is not regulated in the same manner as closed-loop operation, some settings are not functional, such as the V_{OUT} setting, the digital compensator settings, and the constant current mode setting. Other settings can be programmed in a manner that is similar to general closed-loop operation.

OPEN-LOOP OPERATION

The ADP1052 can also run in open-loop operation mode. In this mode, the rising edges and falling edges of the PWM outputs are fixed during normal operation. Therefore, the output voltage varies with the input voltage. The topologies include full bridge, half bridge, and push pull converters.

The PWM settings of open-loop operation are different from those of general closed-loop operation.

1. Set the rising edge timings and falling edge timings by using Register 0xFE3E to Register 0xFE4F. Typically, a duty cycle setting of ~50% is recommended for ease of zero-voltage-switching operation. A phase shift function of 180° is preferred to guarantee balanced PWM outputs.
2. Program Register 0xFE3C to a value of 0x00, which sets the modulation limit to 0 µs.
3. Apply negative modulation to the falling edges of all PWM outputs, OUTA to OUTD (or just one pair of them), for soft start. The soft start of SR1 and SR2 is not recommended.
4. Write 111111 binary to Register 0xFE67[5:0] to set all PWM channels to follow open-loop operation. Set Register 0xFE09[7] to enable the soft start procedure. The soft start speed is specified by Register 0xFE09[4:3].
5. Always set Register 0xFE09[2] = 1. The soft start ramp time is determined by $t_{F2} - t_{R2}$.

Because the output voltage is not regulated, some of the settings, such as the V_{OUT} setting, digital compensator settings, and constant current control, are not functional. Other settings can be programmed to be similar to those of general closed-loop operation.

CURRENT SENSE

The ADP1052 has two current sense inputs: CS1 (Pin 6) and CS2– and CS2+ (Pin 3 and Pin 4, respectively). These inputs sense, protect, and control the primary side input current and the secondary side output current. They can be calibrated to reduce errors caused by the external components.

CS1 Operation (CS1 Pin)

Current Sense 1 (CS1) is typically used for the monitoring and protection of the primary side current, which is commonly sensed using a current transformer (CT). The input signal at the CS1 pin is fed into an ADC for current monitoring. The range of the ADC is 0 V to 1.60 V. The input signal is also fed into an analog comparator for cycle-by-cycle current limiting and I_{IN} overcurrent fast protection, with a reference of 0.25 V or 1.2 V set by Register 0xFE1B[6]. The typical configuration for the CS1 current sense is shown in Figure 25.

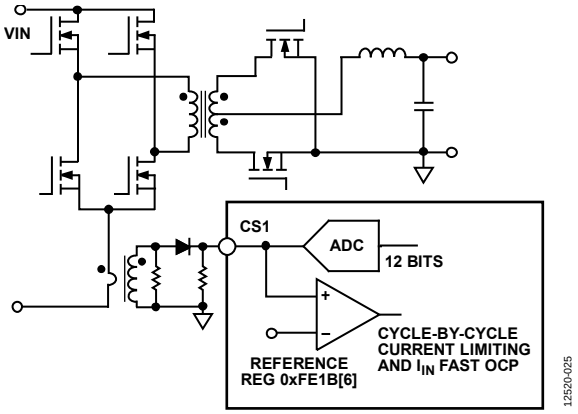

Figure 25. CS1 Operation

The CS1 ADC measures the average value of the primary side current. The ADC samples at a frequency of 1.56 MHz and reports a CS1 reading (12 bits) in the READ_IIN command (Register 0x89), with an asynchronously averaged rate of 10 ms, 63 ms, 126 ms, 252 ms, or 504 ms set by Register 0xFE65[2:0].

Various I_{IN} overcurrent fast fault limits and response actions can be set for CS1. These are described in the Current Sense and Limit Setting Registers section.

CS2 Operation (CS2–, CS2+ Pins)

Current Sense 2 (CS2) is typically used for the monitoring and protection of the output current. The full-scale range of the CS2 ADC is 120 mV. The differential inputs are fed into an ADC through a pair of external resistors that provide the necessary level shifting. The CS2+ and CS2– device pins are regulated to approximately 1.12 V by internal current sources.

Depending on the configuration of the current sense resistor, the ADP1052 must be programmed in low-side mode or high-side mode, using Register 0xFE19[7]. Typical configurations are shown in Figure 26 and Figure 27.

When using low-side current sensing, as shown in Figure 26, the current sources are 225 µA. Therefore, the required resistor value is 1.12 V/225 µA = 4.98 kΩ, and 4.99 kΩ resistors are preferred.

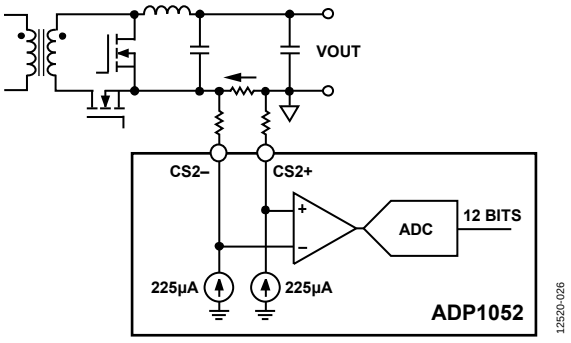

Figure 26. CS2 Low-Side Resistive Current Sense

When using high-side current sensing, as shown in Figure 27, the current sources are 1.915 mA. Therefore, the required resistor value is (V_{OUT} – 1.12 V)/1.915 mA. If V_{OUT} = 12 V, 5.62 kΩ resistors are required.

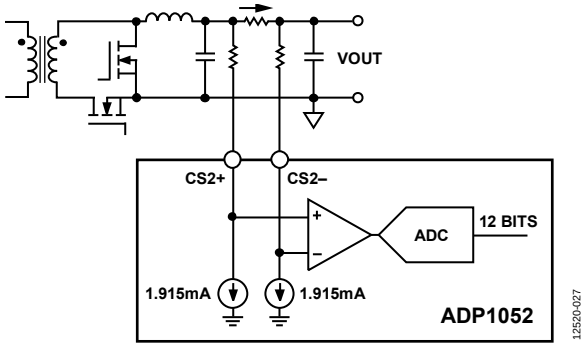

Figure 27. CS2 High-Side Resistive Current Sense

The ADC samples at a frequency of 1.56 MHz, and the reading is averaged in an asynchronous fashion. This reading is used to determine actions on faults, such as the IOUT OC fault, with an average rate of 82 µs (seven bits) or 328 µs (nine bits), which is set by Register 0xFE1B[4]. The ADP1052 also reports an output current reading in the READ_IOUT command (Register 0x8C), with an average rate of 10 ms, 63 ms, 126 ms, 252 ms, or 504 ms set by Register 0xFE65[2:0].

Various limits and response actions can be set for CS2, such as the IOUT_OC_FAULT_LIMIT command (Register 0x46) and the IOUT_OC_FAULT_RESPONSE (Register 0x47) command. These limits and responses are described in the PMBus Command Set and Current Sense and Limit Setting Registers sections.

SOFT START AND SHUTDOWN

On/Off Control

The OPERATION command (Register 0x01) and the ON_OFF_ CONFIG command (Register 0x02) control the power-on and power-off behaviors of the ADP1052. The OPERATION command turns the ADP1052 on and off in conjunction with input from the CTRL pin (Pin 16). The combination of the CTRL pin input and serial bus commands required to turn the ADP1052 on and off is configured by the ON_OFF_CONFIG command. When commanding the ADP1052 to turn on, the power supply on (PSON) signal is enabled, and the ADP1052 follows the soft start procedure to begin the power conversion.

Soft Start

After VDD power-up and initialization, when the ADP1052 is commanded to turn on, the PSON signal is enabled. The controller waits for a user specified turn-on delay (TON_DELAY, Register 0x60) before initiating this output voltage soft start ramp.

The soft start is then performed by actively regulating the output voltage and digitally ramping up the target voltage to the commanded voltage setpoint. The rise time of the voltage ramp is programmed, using the TON_RISE command (Register 0x61), to minimize the inrush currents associated with the start-up voltage ramp. A nonzero prebiased voltage results in a longer turn on delay and shorter rise time.

When the user turns on the power supply, the following soft start procedure is initiated (see Figure 29):

1. At t = t_0, the PSON signal is enabled by a combination of the OPERATION command, the ON_OFF_CONFIG command, and/or the CTRL pin. The ADP1052 verifies that the initial flags indicate no abnormalities.
2. The ADP1052 waits for the programmed TON_DELAY time to ramp up the power stage voltage at t_1. The soft start filter gain (set by Register 0xFE3D[1:0]) is used for closed-loop control.
3. The soft start begins to ramp up the internal reference. The soft start ramp time is programmed using the TON_RISE command.
4. At t_2, the soft start ramp reaches the output voltage setpoint. The high frequency ADC starts to settle.
5. Additional high frequency ADC settling debounce time can be programmed using Register 0xFE3D[5:4]. If the debounce time is used, the high frequency ADC is activated at t_3. The period between t_2 and t_3 is the high frequency ADC settling debounce time. At t_3, the control loop is switched from the soft start filter to the normal filter.

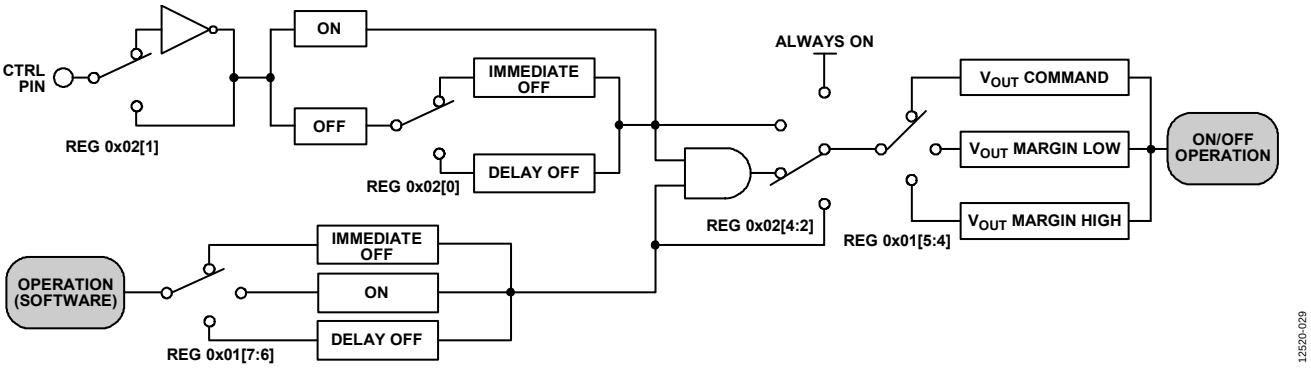

Figure 28. On/Off Control Diagram

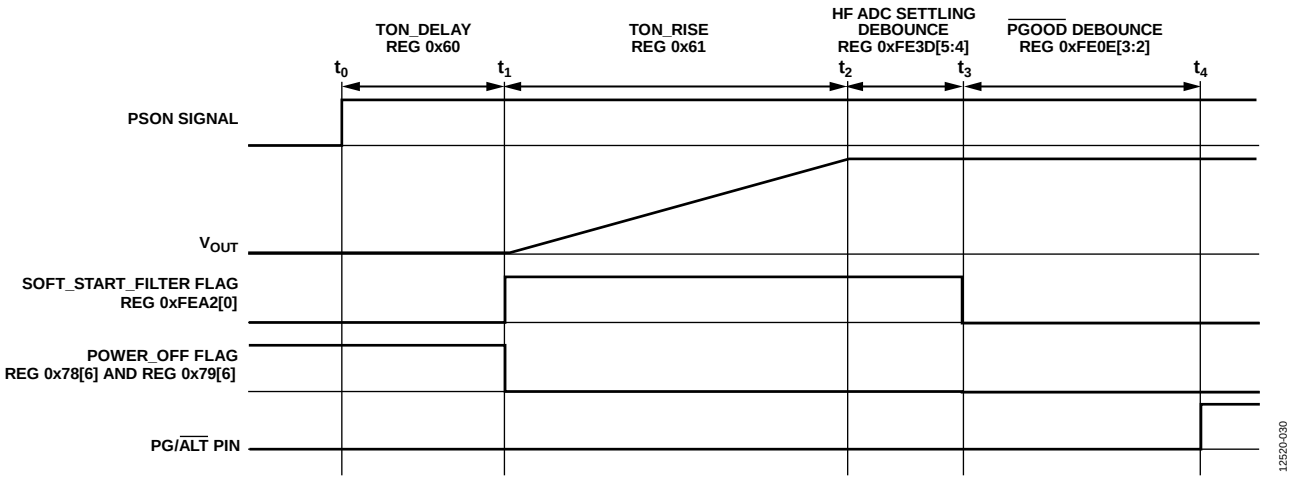

Figure 29. Soft Start Timing Diagram

If no faults are present, the PGOOD signal waits for the programmed debounce time (Register 0xFE0E[3:2]) before the PG/ALT pin is pulled high at t_4. If a fault condition occurs during the soft start ramp (the time set by the TON_RISE command, t_1 to t_2), the ADP1052 responds as programmed, unless the flag is blanked during soft start. The user can program which flags are active during the soft start. All flags are active at the end of the soft start ramp (t_2). See the Flag Blanking During Soft Start section for more information.

The SR1 and SR2 outputs and volt-second balance functions can also be disabled during the soft start ramp. For more information, see the Synchronous Rectification section and Volt-Second Balance Control section, respectively.

Digital Filters During Soft Start

A dedicated soft start filter is used during soft start. The soft start filter is a pure low frequency filter with a programmable gain. The filter is disabled at the end of the soft start routine (t_2) prior to using the general digital compensator. The soft start filter gain is programmed using Register 0xFE3D[1:0].

The soft start filter is used during the ramp time of the voltage reference, until the VS high frequency ADC is settled. The user can program (using Register 0xFE3D[4]) whether to add a high frequency ADC debounce time. The high frequency ADC debounce time is the interval from when the high frequency ADC is settled to when the frequency filter takes action. The debounce time can be programmed at 5 ms or 10 ms using Register 0xFE3D[5]. During the time when the soft start filter is in use, the SOFT_START_ FILTER flag is set. It is recommended that when a fast load transient occurs during soft start, do not use high frequency ADC debounce time.

Software Reset

The software reset command allows the user to perform a software reset of the ADP1052. When a 1 is written to Register 0xFE06[0], the power supply is immediately turned off and then restarted with a soft start following a restart delay. The restart delay time can be programmed as 0 ms, 500 ms, 1 sec, or 2 sec (Register 0xFE07[1:0]). If both TON_DELAY and the restart delay are programmed with 0 ms, a write to this bit has no effect.

Shutdown

When the ADP1052 is commanded to turn off, the PSON signal clears. Depending on the setting of the OPERATION command, the ADP1052 shuts down immediately or waits for a user specified turn-off delay (TOFF_DELAY) prior to the shutdown action.

If the ADP1052 turns off because a fault condition occurs, the shutdown actions are programmed by the specific fault flag responses. See the Power Monitoring, Flags, and Fault Responses section for more information. The PGOOD flag setting debounce time can be programmed in Register 0xFE0E[1:0]). This debounce time is from when the PGOOD setting condition is met to when the PGOOD flag is set and the PG/ALT pin is pulled low.

Power-Good Signals

The ADP1052 has an open-drain, power-good pin, PG (PG/ALT, Pin 17). When the pin is logic high, the power is good. In addition, the ADP1052 has a power-good flag, PGOOD, which is a negation of power good. When this flag is set, it indicates that the power is not good. The PG/ALT pin and the PGOOD flag can be programmed to respond to the flags from the following list:

- VIN_UV_FAULT
- IIN_OC_FAST_FAULT
- IOUT_OC_FAULT
- VOUT_OV_FAULT
- VOUT_UV_FAULT
- OT_FAULT
- OT_WARNING
- SR_RC_FAULT

Register 0xFE0D programs the masking of these flags, which prevents them from setting the PGOOD flag and driving the PG/ALT pin low; whereas Register 0xFE0E[1:0] sets the debounce time to drive the PG/ALT pin low and set the PGOOD flag (see Figure 30).

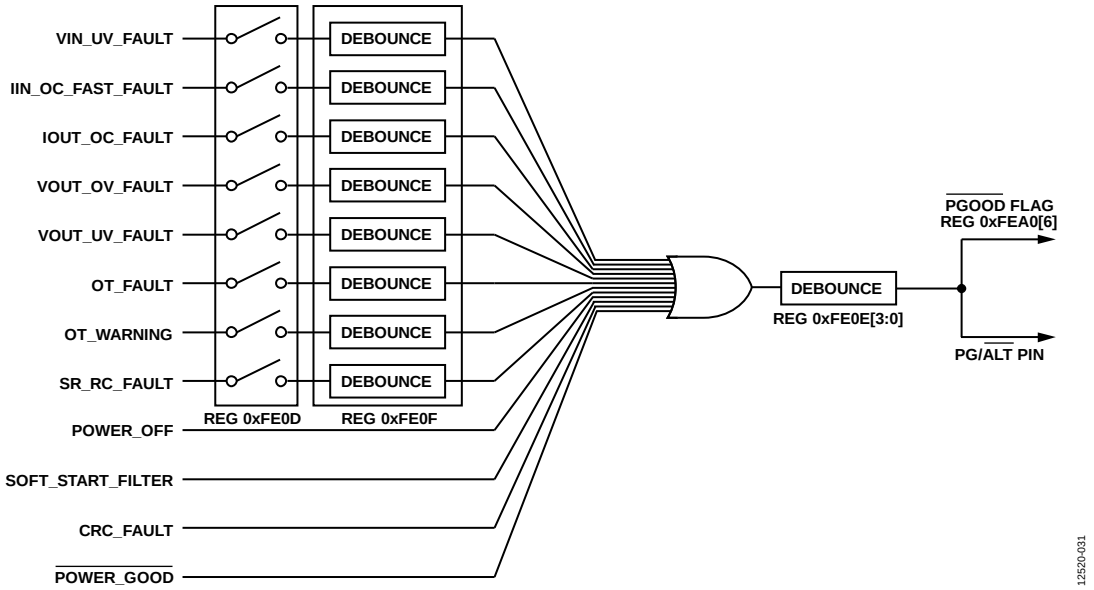

Figure 30. PGOOD Programming

The POWER_GOOD_ON command (Register 0x5E) sets the voltage limit that the output voltage must exceed before the POWER_GOOD flag (Register 0x79[11]) can be cleared. Similarly, the output voltage must fall below the POWER_GOOD_OFF limit (Register 0x5F) to set the POWER_GOOD flag.

The PG/ALT pin is always driven low and the PGOOD flag is always set when one of the POWER_OFF, SOFT_START_FILTER, CRC_FAULT, or POWER_GOOD flags is set.

The debounce timings for setting and clearing the PGOOD flag can be programmed to 0 ms, 200 ms, 320 ms, or 600 ms in Register 0xFE0E[3:0].

VOLT-SECOND BALANCE CONTROL

The ADP1052 has a dedicated circuit to maintain volt-second balance in the main transformer when operating in full bridge topology. This circuit eliminates the need for a dc blocking capacitor. In interleaved topologies, volt-second balance can also be used for current balancing to ensure that each interleaved phase contributes equal power.

The circuit monitors the current flowing in both legs of the full bridge topology and stores this information. It compensates the selected PWM signals to ensure equal current flow in the two legs of the full bridge topology. The CS1 pin is the input for this function.

Several switching cycles are required for the circuit to operate effectively. The maximum amount of modulation applied to each edge of the selected PWM outputs is programmable to ±80 ns or ±160 ns, using Register 0xFE54[2]. The balance control gains are programmable via Register 0xFE54[1:0].

The compensation of the PWM drive signals is performed on the edges of two selected outputs, using Register 0xFE55, Register 0xFE56, and Register 0xFE57. The direction of the modulation is also programmable in these registers.

The volt-second balance control can be disabled during soft start with Register 0xFE0C[1].

There are also leading edge blanking functions at the sensed CS1 signal for more accurate control results. The blanking time follows the CS1 cycle-by-cycle current-limit blanking time (see the Current Sense section).

To avoid the wrong compensation in light load mode, the CS1 threshold in Register 0xFE38 enables the volt-second balance. Below this threshold, volt-second balance is not enabled.

CONSTANT CURRENT MODE

Constant current mode is part of the PMBus output current fault response function. When the output current reaches the IOUT_OC_FAULT_LIMIT value, the ADP1052 can be configured to operate in constant current mode, using the output current as the feedback signal for closed-loop operation (see Figure 31). To ensure that the output current remains constant, the output voltage is ramped down linearly as the load resistance decreases.

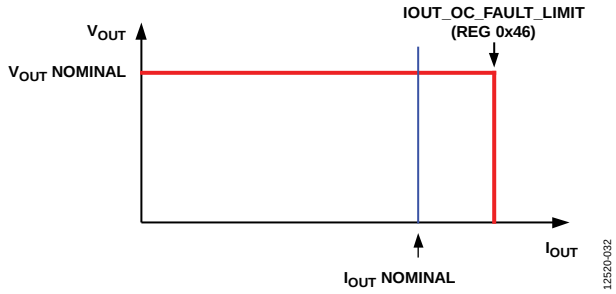

Figure 31. Constant Current Mode (V_{OUT} vs. I_{OUT})

Two CS2 output current averaging speeds can be selected via Register 0xFE1B[4]: a 9-bit CS2 current averaging speed and

a 7-bit CS2 current averaging speed. The 9-bit CS2 current averaging speed has a VS± basic voltage change rate of 1.18 mV/ms.

The 7-bit CS2 current averaging speed has a VS± basic voltage change rate of 4.72 mV/ms. In addition, the output voltage change rate can be set by Register 0xFE3A[7:6] to 1×, 2×, 4×, or 8× the VS± basic voltage change rate.

PULSE SKIPPING

The pulse skipping function reduces the switching loss under very light load current conditions while keeping the output voltage stable. Set Register 0xFE67[6] to activate this function.

When light load mode or deep light load mode is enabled, as the output current drops, the supply enters discontinuous conduction mode (DCM). In DCM, the modulation value is a function of the load current. If a very light load current requires a modulation value (duty cycle) of less than the threshold set by Register 0xFE69, pulse skipping mode is enabled. In pulse skipping mode, the PWM output appears intermittently. If the digital compensator signals an error requiring a modulation value that is less than the threshold set by Register 0xFE69, no PWM pulses are generated. If the digital compensator signals an error requiring a modulation value that is greater than the threshold set by Register 0xFE69, PWM pulses are generated.

The pulse skipping mode is always blanked during soft start.

PREBIAS STARTUP

The prebias start-up function provides the capability to start up with a prebiased voltage on the output. It protects the power supply against existing external voltage on the output during startup and ensures a monotonic startup before the power supply reaches full regulation (see Figure 32).

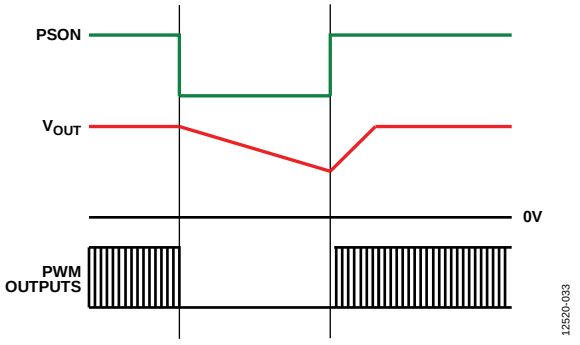

Figure 32. Prebias Startup

The prebias start-up function is enabled by Register 0xFE25[7]. During prebias startup, the ADP1052 soft start ramp starts at the existing voltage value sensed on the VS± pins, and the soft start ramp time is reduced proportionally.

The initial PWM modulation value does not begin with zero but, instead, with a value that builds a balanced relationship between the input voltage and the output voltage. This balance avoids the sudden charging or discharging of the output capacitor and achieves a monotonic and smooth startup. Use the following equation to calculate the initial modulation value:

$$t_{MODU_INI} = t_{MODU_NOM} \times \frac{V_{OUT}}{V_{OUT_NOM}} \times \frac{V_{IN_NOM}}{V_{IN}}$$

where:

t_{MODU_INI} is the initial modulation value when the controller begins to generate PWM pulses during startup.
t_{MODU_NOM} is the modulation value set by Register 0xFE39. It emulates the modulation value when the input voltage and the output voltage are in the nominal condition.
V_{OUT} is the sensed output voltage.
V_{OUT_NOM} is the nominal output voltage set by VOUT_COMMAND (Register 0x21).
V_{IN_NOM} is the nominal input voltage when the VF pin voltage = 1 V.
V_{IN} is the sensed input voltage.

In addition, Register 0xFE6C[1] is set for correct operation. To sense the input voltage (represented by VF) when the power supply is off, use additional circuitry, such as an auxiliary power circuit, to sense the input voltage.

If the input voltage signal is not available when the power is off, the t_{MODU_INI} value is calculated based on the t_{MODU_NOM} and the output voltage information. In this case, Register 0xFE6C[1] clears to 0. The initial modulation value is calculated as

$$t_{MODU_INI} = t_{MODU_NOM} \times \frac{V_{OUT}}{V_{OUT_NOM}}$$

where:

t_{MODU_INI} is the initial modulation value when the controller begins to generate PWM pulses during startup.
t_{MODU_NOM} is the modulation value set by Register 0xFE39. It emulates the modulation value when the input voltage and the output voltage are in the nominal condition.
V_{OUT} is the sensed output voltage.
V_{OUT_NOM} is the nominal output voltage set by VOUT_COMMAND (Register 0x21).

If the closed-loop, line voltage, feedforward function is selected, the input voltage is introduced from the feedforward loop, and the V_{IN} value is always included for calculation of the initial modulation value.

Reverse current protection can also be used in prebias start-up mode. See the Synchronous Rectification (SR) Reverse Current Protection section for details. Additionally, to achieve a smooth transition, the SR soft start can be enabled in this mode. See the Synchronous Rectification section for details.

OUTPUT VOLTAGE DROOPING CONTROL

The ADP1052 features output voltage drooping control for current sharing applications. Output voltage drooping is introduced digitally by modifying the value of the digital output voltage reference, based on the output current value. Two parameters can be configured independently: the drooping resistor and the output current averaging speed.

The drooping resistor follows the PMBus specifications. The VOUT_DROOP command (Register 0x28) specifies the drooping resistor in the range of 0 mΩ to 255 mΩ.

The CS2 (output current) averaging speed dictates how quickly the output current is sensed for generating the digital voltage reference. Set Register 0xFE1E[7:6] to change the output current update speed from 82 µs to 656 µs. An output current update of 82 µs is recommended.

VDD AND VCORE

When the voltage of the VDD pin is applied (V_{DD}), there is a delay before the device can regulate the power supply. When V_{DD} rises above the power-on reset and UVLO levels, it takes ~20 µs for the VCORE pin (Pin 18) to reach its operational point of 2.6 V. The EEPROM contents are then downloaded to the registers. The download takes approximately an additional 120 µs. After the EEPROM contents are downloaded, the ADP1052 is ready for operation; however, it takes a maximum of 52 ms for the ADP1052 to complete initialization of the address after a power-on reset. Therefore, it is recommended that the master device access the ADP1052 at least 52 ms after power-on reset.

If the ADP1052 is programmed to power up at this time, the soft start ramp begins. Otherwise, the device waits for a PSON signal, programmed in Register 0x01 and Register 0x02.

To minimize trace length, the proper amount of decoupling capacitance must be placed between the VDD pin (Pin 19) and the AGND pin (Pin 20), as close as possible to the device. The same requirement applies to the VCORE pin (Pin 18). It is recommended that the VCORE pin not be used as a reference or to generate other logic levels using resistive dividers.

CHIP PASSWORD

On power-up, some registers in the ADP1052 are locked and protected from being written to or read from. When the chip is locked, the following commands and all read-only registers are accessible:

- OPERATION
- ON_OFF_CONFIG
- CLEAR_FAULTS
- WRITE_PROTECT
- RESTORE_DEFAULT_ALL
- VOUT_COMMAND
- VOUT_TRIM
- VOUT_CAL_OFFSET

Unlock the Chip Password

To unlock the chip password, perform two consecutive writes with the correct password (default value = 0xFFFF) and use the CHIP_PASSWORD command (Register 0xD7). Between the two write actions, any read or write action to another register in this device interrupts the unlocking of the chip password. The CHIP_PASSWORD_UNLOCKED flag (Register 0xFEA0[7]) is set to indicate that the chip password is unlocked for access.

Lock the Chip Password

To lock the chip password, use the CHIP_PASSWORD command (Register 0xD7) to write any value other than the correct password. The CHIP_PASSWORD_UNLOCKED flag (Register 0xFEA0[7]) is then cleared to indicate that the chip password is locked from access.

Change the Chip Password

To change the chip password, first write the old password, using the CHIP_PASSWORD command (Register 0xD7). Next, write the new password, using the same command. The chip password is changed to the new password. If the chip password is to be changed permanently, the register contents must be saved in the EEPROM after the chip password is changed. If the correct chip password is lost, the RESTORE_DEFAULT_ALL command (Register 0x12) restores the factory default settings. In this case, all the user settings reset.

POWER MONITORING, FLAGS, AND FAULT RESPONSES

The ADP1052 has extensive system and fault condition monitoring capabilities for the sensed signals. The system monitoring functions include current, voltage, power, and temperature readings. The fault conditions include out-of-limit values for current, voltage, power, and temperature. The limits for the fault conditions are programmable, and flags are set when the limits are exceeded.

FLAGS

The ADP1052 has an extensive set of flags, including the PMBus standard flags and manufacturer specific flags that are set when certain limits and thresholds are exceeded or certain conditions are met. A setting of 1 indicates that a fault or warning event has occurred. A setting of 0 indicates that a fault or warning event has not occurred.

PMBus Standard Flags

Figure 33 shows a summary of the ADP1052 PMBus standard fault status registers. The CLEAR_FAULTS command (Register 0x03) clears all bits simultaneously in the PMBus status registers (Register 0x78 to Register 0x7E).

Manufacturer Specific Flags

Register 0xFEA0 to Register 0xFEA2 store the manufacturer specific flags. These flags include the following (see the Manufacturer Specific Fault Flag Registers section for details):

- Housekeeping flags, such as CHIP_PASSWORD_UNLOCKED, VDD_OV, EEPROM_UNLOCKED, and CRC_FAULT.
- Flags that can be programmed for protection responses, such as CS3_OC_FAULT, FLAGIN, and SR_RC_FAULT.
- Status flags, such as PGOOD, CONSTANT_CURRENT, LIGHT_LOAD, SYNC_LOCKED, CHIP_ID, PULSE_SKIPPING, ADAPTIVE_DEAD_TIME, DEEP_LIGHT_LOAD, modulation, and SOFT_START_FILTER.

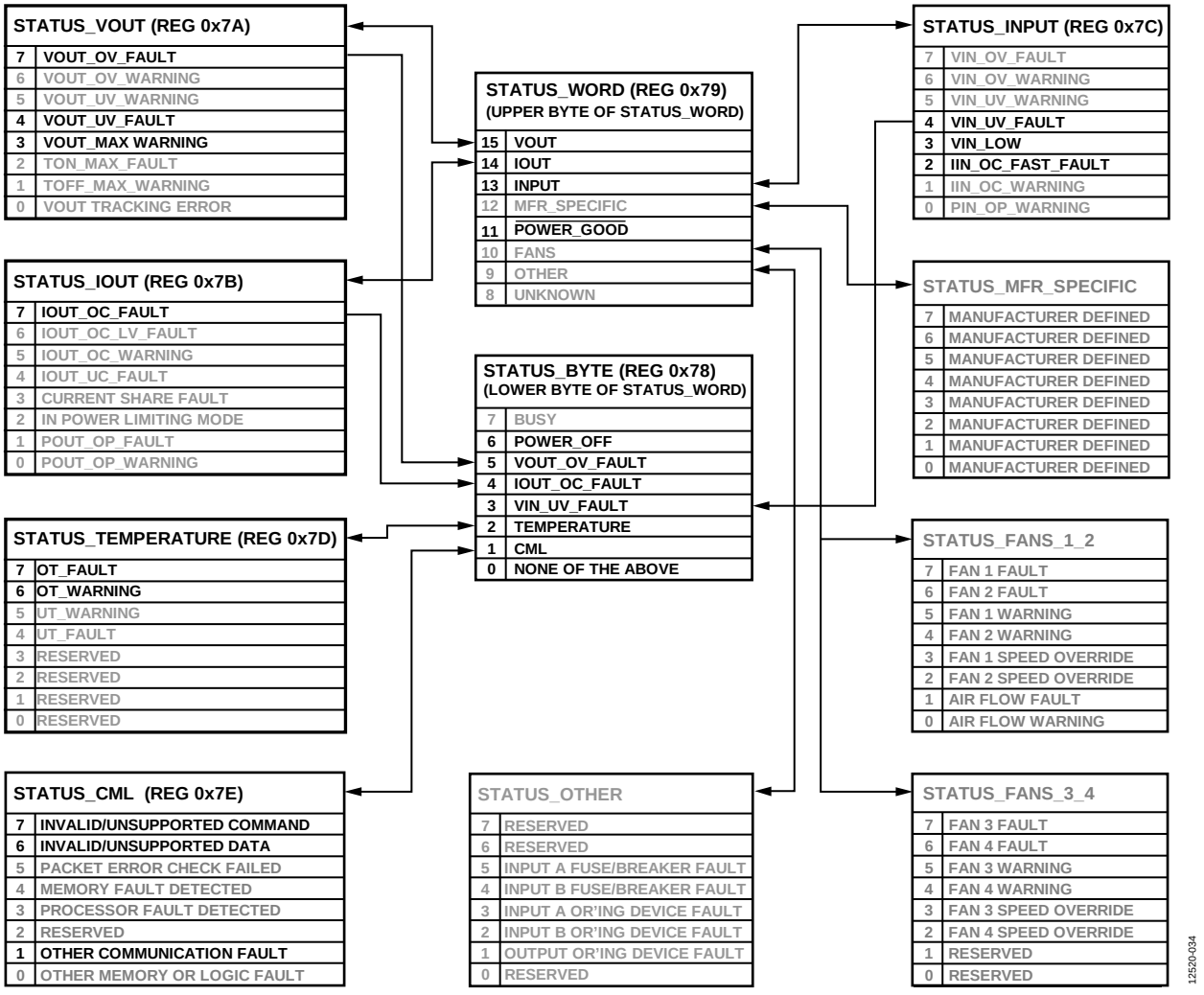

Figure 33. Summary of the Fault Status Registers (Commands in Black are Supported; Commands in Gray are Not Supported)

Manufacturer Specific Latched Flags

The ADP1052 has a set of latched flag registers (Register 0xFEA3 to Register 0xFEA5). The latched flag registers have the same flags as Register 0xFEA0 to Register 0xFEA2, but the flags in the latched registers remain set so that intermittent faults can be detected. Reading a latched flag register resets all the flags in that register. A PSON signal can also reset the latched flags.

Flags Debounce Time

The debounce timing of the manufacturer specific flags and the PMBus standard flags is programmable (see Table 6). The debounce time is the time during which the fault condition must be continuously triggered before the flag is set. Refer to the corresponding register settings for more information.

The debounce time is used for flag setting. Only the $\overline{\text{PGOOD}}$ flag has a debounce time for flag clearing. For all other flags, the flag reenable delay, specified in Register 0xFE05[7:6] (see Table 113), functions as the debounce time for flag clearing. Refer to the Manufacturer Specific Protection Responses section for details.

Housekeeping Flags

The CHIP_PASSWORD_UNLOCKED flag (Register 0xFEA0[7]) indicates that the chip password is in the unlocked state, and all the registers can be accessed.

The VDD_OV flag (Register 0xFEA0[0]) is set when the V_{DD} voltage exceeds the V_{DD} OVLO threshold. The debounce time is programmable as 2 µs or 500 µs, using Register 0xFE05[4]. When the flag is set, the ADP1052 shuts down. The flag is always cleared when Register 0xFE05[5] is set, regardless of the V_{DD} voltage.

The EEPROM_UNLOCKED flag (Register 0xFEA2[3]) indicates that the EEPROM is in the unlocked state and can be updated.

The CRC_FAULT flag (Register 0xFEA2[2]) indicates that an error has occurred when downloading the EEPROM contents to the internal registers. The device shuts down and requires a PSON signal (programmed in Register 0x01 and Register 0x02) and/or the toggling of the CTRL pin (Pin 16) to restart.

Flag Blanking During Soft Start

Flag blanking means that when a fault condition is met, the corresponding flag is set, but there are no related actions.

The following flags are always blanked during soft start:

- VOUT_UV_FAULT
- OT_FAULT

The following flags can be programmed to be blanked during soft start, using Register 0xFE0B:

- VOUT_OV_FAULT (Bit 0)
- CS3_OC_FAULT (Bit 1)
- IOUT_OC_FAULT (Bit 2)
- IIN_OC_FAST_FAULT (Bit 3)
- VIN_UV_FAULT (Bit 4)
- LIGHT_LOAD (Bit 5)
- DEEP_LIGHT_LOAD (Bit 5)
- FLAGIN (Bit 6)
- SR_RC_FAULT (Bit 7)

If a flag is blanked during soft start, it is also blanked during the TON_DELAY time.

Table 6. Flag Debounce Time

Flag	Debounce Time	Register
VOUT_OV_FAULT	0 µs, 1 µs, 2 µs, 8 µs	0xFE26[7:6]
VOUT_UV_FAULT	0 ms, 20 ms, 40 ms, 80 ms, 160 ms, 320 ms, 640 ms, 1280 ms	0x45[2:0]
IOUT_OC_FAULT	0 ms, 20 ms, 40 ms, 80 ms, 160 ms, 320 ms, 640 ms, 1280 ms	0x47[2:0]
OT_FAULT	1 sec	0x50[2:0]
OT_WARNING	0 ms, 100 ms	0xFE2F[2]
CS3_OC_FAULT	0 ms, 10 ms, 20 ms, 200 ms	0xFE19[6:5]
VIN_UV_FAULT	0 ms, 2.5 ms, 10 ms, 100 ms	0xFE29[1:0]
FLAGIN	0 µs, 100 µs	0xFE12[1]
SR_RC_FAULT	40 ns, 200 ns	0xFE1A[3]
VDD_OV	2 µs, 500 µs	0xFE05[4]
$\overline{\text{PGOOD}}$	0 ms, 200 ms, 320 ms, 600 ms	0xFE0E[3:0]

First Flag ID Recording

When the ADP1052 registers one or several fault conditions, it stores the first flag in a dedicated first flag ID register (Register 0xFEA6). The first flag ID represents the first flag that triggers a shutdown response. The following types of flags are not recorded in the first flag ID register:

- Flags that are configured to be ignored
- Flags that have a configured response causing the PWM outputs to be disabled, but that do not use a soft start to reenable the PWM outputs after the fault is resolved
- Flags that have a configured response causing the synchronous rectifiers to be disabled

The first flag ID register gives the user more information for fault diagnosis than a simple flag. This register also stores the previous first fault ID.

The status of the first flag ID register can be saved to the EEPROM, as well, by setting Register 0xFE0C[3]. To limit the number of writes to the EEPROM, only the first flag after a VDD power reset can be saved to the EEPROM. During the next VDD power-on, the first flag ID is downloaded from the EEPROM and loaded to the first flag ID register (Register 0xFEA6).

Figure 34 shows the timing diagram for the first flag ID recording scheme. Table 7 describes the actions shown in Figure 34.

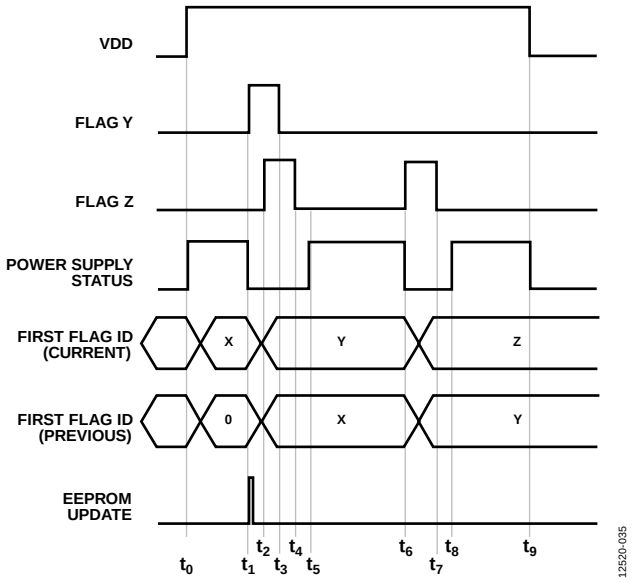

Figure 34. First Flag Timing

Table 7. First Flag ID Timing

Step	Action	Power Supply	First Flag ID in Register[1]		First Flag ID in EEPROM[1]	
			Previous ID	Current ID	Previous ID	Current ID
t_0	As an example, the previous ID and the current ID in the EEPROM are 0 and Flag X, respectively. When the V_{DD} voltage is applied on the ADP1052, the first flag ID is downloaded from the EEPROM to the first flag ID register (Register 0xFEA6).	On	0	Flag X	0	Flag X
t_1	A fault (Flag Y) shuts down the power supply. In the first flag ID register, Flag Y is now the current flag ID, and Flag X is the previous flag ID. The first flag ID register is updated accordingly. The EEPROM is then updated to save this information.	Off	Flag X	Flag Y	Flag X	Flag Y
t_2	Another fault (Flag Z) occurs while the power supply is off. Because Flag Z is not the first flag that caused the shutdown, neither the first flag ID register nor the EEPROM is updated.	Off	Flag X	Flag Y	Flag X	Flag Y
t_3	Flag Y is cleared, but Flag Z keeps the power supply off. The first flag ID register and the EEPROM are not updated.	Off	Flag X	Flag Y	Flag X	Flag Y
t_4	Flag Z is cleared. The first flag ID register is not updated.	Off	Flag X	Flag Y	Flag X	Flag Y
t_5	The power supply is turned on again after the flag reenable delay. The first flag ID register is not updated.	On	Flag X	Flag Y	Flag X	Flag Y
t_6	The fault indicated by Flag Z shuts down the power supply. Flag Z is now the current first flag ID, and Flag Y is the previous flag ID. The first flag ID register is updated accordingly. The EEPROM is not updated to save the information.	Off	Flag Y	Flag Z	Flag X	Flag Y
t_7	Flag Z is cleared. The first flag ID register is not updated.	Off	Flag Y	Flag Z	Flag X	Flag Y
t_8	The power supply is turned on again after the flag reenable delay. The first flag ID register is not updated.	On	Flag Y	Flag Z	Flag X	Flag Y
t_9	The V_{DD} voltage is removed and the power supply is turned off.	Off	N/A	N/A	N/A	N/A

[1] N/A means not applicable.

VOLTAGE READINGS

Input Voltage Reading

The input voltage, which is reported in the READ_VIN command (Register 0x88), is updated every 10 ms. The VIN_SCALE_MONITOR command (Register 0xD8) is set for correct input voltage reading.

The input voltage is sensed through the VF pin (Pin 5). The VF ADC has an input range of 1.6 V. The raw data is stored in Register 0xFEAC. The reading is 11 bits, meaning that the LSB size is 1.6 V/2048 = 781.25 µV.

Because the input voltage signal can be sensed through the switching node of the secondary windings, the voltage drop caused by the conduction current in the primary switches, transformer windings, and copper trace adds to the error to the input voltage sense. To compensate for the error, use the following equation:

$$Y_{COMP} = Y_{UNCOMP} \pm (N \times X \div 2^{11})$$

where:
Y_{COMP} is the compensated VF value in Register 0xFEAC[15:5].
Y_{UNCOMP} is the uncompensated VF value in Register 0xFEAC[15:5].
N is the compensation coefficient set in Register 0xFE59[7:0], and the polarity is set in Register 0xFE58[0].
X is the CS1 current value in Register 0xFEA7[15:4].

The compensated VF value is used for conversion of the READ_VIN value.

Output Voltage Reading

The output voltage is reported in the READ_VOUT command (Register 0x8B) and updated every 10 ms. The VOUT_SCALE_MONITOR command (Register 0x2A) is programmed for correct output voltage reading.

The output voltage value register (Register 0xFEAA) is updated every 10 ms via the VS low frequency ADC.

The VS low frequency ADC has an input range of 1.6 V. The raw data is stored in Register 0xFEAA. The reading is 12 bits, which means that the LSB size is 1.6 V/4096 = 390.625 µV.

CURRENT READINGS

By default, the current readings are updated every 10 ms; however, Register 0xFE65[2:0] can be used to change the update rate to 63 ms, 126 ms, 252 ms, or 504 ms.

Input Current Reading

The input current is reported in the READ_IIN command (Register 0x89). The IIN_SCALE_MONITOR command (Register 0xD9) is set for correct input current reading.

The input current reading is derived from the CS1 ADC, which has an input range of 1.6 V. The raw data is stored in Register 0xFEA7. The reading is 12 bits, which means that the LSB size is 1.6 V/4096 = 390.625 µV.

Output Current Reading

The output current is reported in the READ_IOUT command (Register 0x8C). The IOUT_CAL_GAIN command (Register 0x38) is programmed for correct output current reading.

The output current reading is derived from the CS2 ADC reading. The CS2 ADC has an input value range of 120 mV. The raw data is stored in Register 0xFEA8. The reading is 12 bits, which means that, within a 120 mV range, the LSB size is 120 mV/4096 = 29.297 µV.

CS3 Current Reading

The CS3 reading is an alternative output current reading that is calculated using the CS1 reading and the duty cycle values. The CS3 reading can be used as an alternate output current reading and protection when the current sense resistor, which provides the output current signal to CS2, is not used. Derive the output current reading from the following equation:

$$I_{OUT} = I_{CS3} \times n$$

where I_{CS3} is read from Register 0xFEA9, and n is the turn ratio of the main transformer ($n = N_{PRI}/N_{SEC}$).

Each LSB size in Register 0xFEA9 is 4× the LSB size of the CS1 reading in Register 0xFEA7. For example, if 1 LSB = 0.1 A in Register 0xFEA7[15:4], 1 LSB in Register 0xFEA9[15:4] = 0.4 A.

POWER READINGS

Input Power Reading

The input power value (Register 0xFEAE) is the product of the VF voltage value in Register 0xFEAC[15:5] and the CS1 current value in Register 0xFEA7[15:4]. Therefore, a combination of both voltage and current formulas is used to calculate the power reading in watts (W). Register 0xFEAE is a 16-bit word. It multiplies two 12-bit numbers and then discards the eight LSBs.

Example: if 1 LSB in Register 0xFEAC[15:5] is 0.01 V and 1 LSB in Register 0xFEA7[15:4] is 0.01 A, 1 LSB in Register 0xFEAE[15:0] is 0.01 V × 0.01 A × 2^8 = 0.0256 W.

Output Power Reading

The output power value (Register 0xFEAF) is the product of the VS voltage value in Register 0xFEAA[15:4] and the CS2 current value in Register 0xFEA8[15:4]. Therefore, a combination of both voltage and current formulas is used to calculate the power reading in watts. Register 0xFEAF is a 16-bit word. It multiplies two 12-bit numbers and then discards the eight LSBs.

Example: if 1 LSB in Register 0xFEAA[15:4] is 0.01 V and 1 LSB in Register 0xFEA8[15:4] is 0.01 A, 1 LSB in Register 0xFEAF[15:0] is 0.01 V × 0.01 A × 2^8 = 0.0256 W.

Alternately, the PMBus command READ_POUT (0x96) can be used, which returns the output power (in watts) in linear data format. Use Register 0xFE65[2:0] to select the update rate of 10 ms, 63 ms, 126 ms, 252 ms, or 504 ms.

DUTY CYCLE READING

The READ_DUTY_CYCLE command (Register 0x94, which gives the duty cycle of the PWM output value) is updated every 10 ms. Register 0xFE58[5:2] is set for correct reading of general PWM type topologies; these bits select the PWM channel (OUTA to OUTD) for which the duty cycle value is reported. When phase-shifted full bridge topology is used, Register 0xFE58[1] must be set to 1. The duty cycle value is calculated based on the overlapping of the timing of OUTA and OUTD.

SWITCHING FREQUENCY READING

The READ_FREQUENCY command (Register 0x95) is used to report the switching frequency information in kHz.

TEMPERATURE READING

The RTD pin (Pin 23) is set up for use with an external negative temperature coefficient (NTC) thermistor. The RTD pin has an internal programmable current source. An ADC monitors the voltage on the RTD pin. The RTD ADC has an input range of 1.6 V. The raw data is stored in Register 0xFEAB. It is a 12-bit reading, which means that the LSB size is 1.6 V/4096 = 390.625 µV.

Using Register 0xFE2D[7:6], an internal precision current source can be configured to generate a 10 µA, 20 µA, 30 µA, or 40 µA current. This current source can be trimmed by means of an internal DAC to compensate for thermistor accuracy. To set the current source to the factory default value of 46 µA, write 0xE6 to Register 0xFE2D.

The output of the RTD ADC is linearly proportional to the voltage on the RTD pin; however, thermistors exhibit a nonlinear function of resistance vs. temperature. Therefore, it is necessary to perform postprocessing on the RTD ADC reading to read the temperature accurately.

By connecting an external resistor in parallel with the NTC thermistor, linearization is achieved. Figure 36 shows the RTD and OTP operation. Using the factory default value of 46 µA and the linearization scheme, the temperature, expressed in degrees Celsius (°C), can be read directly via the READ_TEMPERATURE command (Register 0x8D). The temperature reading is derived from the RTD ADC output at an update rate of every 10 ms; however, by using Register 0xFE65[2:0], the update rate can be changed to 63 ms, 126 ms, 252 ms, or 504 ms. The ADP1052 implements a linearization scheme based on a preselected combination of external components and current selection (see the Temperature Linearization Scheme section).

Optionally, the user can process the RTD reading and perform postprocessing in the form of a lookup table or polynomial equation to match the specific NTC thermistor used.

In this case, the external resistor in parallel is not needed. With an internal current source of 46 µA, the equation to calculate the ADC code at a certain NTC value (R_X) is given by the following formula:

$$ADC\ CODE = 46\ \mu A \times Rx/390.7\ \mu V$$

For example, at 60°C, the NTC thermistor connected to the RTD pin is 21.82 kΩ. Therefore,

$$RTD\ ADC\ CODE = 46\ \mu A \times 21.82\ k\Omega/390.7\ \mu V = 2570$$

For the overtemperature function, the RTD threshold (in volts) can be transferred through the OT_FAULT_LIMIT command in Register 0x4F, using the linearization equations shown in the Temperature Linearization Scheme section.

Alternatively, the temperature reading and overtemperature protection function can be implemented by applying an external analog temperature sensor, such as the STLM20. See Figure 35 for more information. Using this solution, the temperature sense range can be as low as −40°C. To facilitate this approach, disable the internal current by writing 0x00 to Register 0xFE2D and setting Register 0xFE2B[2]. The temperature reading in °C can be derived by the following formula:

$$T = 159.65 - \frac{ADC\ CODE}{29.92} \times \frac{R1 + R2}{R2}$$

where the *ADC CODE* is the reading in Register 0xFEAB[15:4]. The recommended values of R1 and R2 are 20 kΩ and 10 kΩ, respectively.

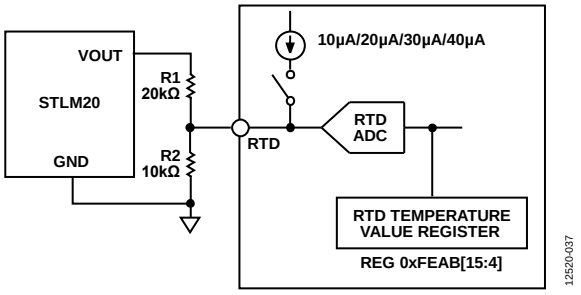

Figure 35. Temperature Sensing by an Analog Temperature Sensor

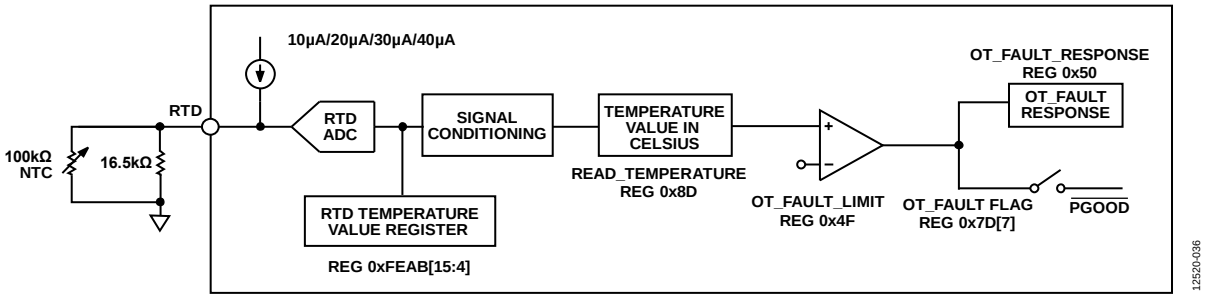

Figure 36. RTD and OTP Operation

TEMPERATURE LINEARIZATION SCHEME

The ADP1052 linearization scheme is based on a combination of a thermistor (R25 = 100 kΩ, 1%), an external resistor (16.5 kΩ, 1%), and the 46 µA current source, preselected for best performance when linearizing measured temperatures in the industrial range.

The NTC thermistor that is required must have a resistance of R25 = 100 kΩ, 1%, such as the NCP15WF104F03RC (beta = 4250, 1%). It is recommended that 1% tolerance be used for both the resistor and beta values. The linearization equations show the relationship between the RTD voltage, V_{RTD} (in volts), and temperature reading, T (in degrees Celsius).

If T < 104°C,

$$V_{RTD} = (130 - T) \times \frac{1.6}{256}$$

If T ≥ 104°C,

$$V_{RTD} = (156 - T) \times \frac{1.6}{512}$$

where T represents the temperature reading in Register 0x8D.

Figure 37 shows the temperature linearization curves.

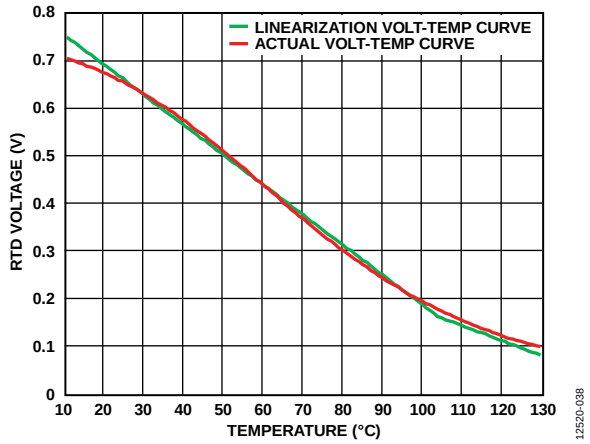

Figure 37. Temperature Linearization Scheme Curves

Using the internal linearization scheme, the READ_TEMPERATURE command (Register 0x8D) returns the current temperature in degrees Celsius. For overtemperature protection, the user can directly set the OT_FAULT_LIMIT command (Register 0x4F) in degrees Celsius. See the OT_FAULT and OT_WARNING section for more information.

PMBUS PROTECTION COMMANDS

V_{OUT} Overvoltage Protection (OVP)

The V_{OUT} overvoltage protection feature in the ADP1052 follows PMBus specifications. The limits are programmed in the VOUT_OV_FAULT_LIMIT command (Register 0x40) to correspond to the voltage between 75% and 150% of the nominal output voltage. The responses are programmed using the VOUT_OV_FAULT_RESPONSE command (Register 0x41). The VOUT_OV_FAULT flag (Register 0x78[5], Register 0x79[5], and Register 0x7A[7]) is set when the voltage reading exceeds the overvoltage limit.

In a direct parallel system, multiple power supply units are connected directly in parallel without any OR'ing device. An overvoltage condition in one power supply can raise the common bus voltage, causing the activation of overvoltage protection in the other power supplies connected to the common bus. As a result of this overvoltage protection action, the common bus may fail. The ADP1052 provides a highly flexible, conditional overvoltage protection function for redundant control in a direct parallel system. It consists of an overvoltage detection block, a modulation flag triggering block, and an overvoltage response block (see Figure 38).

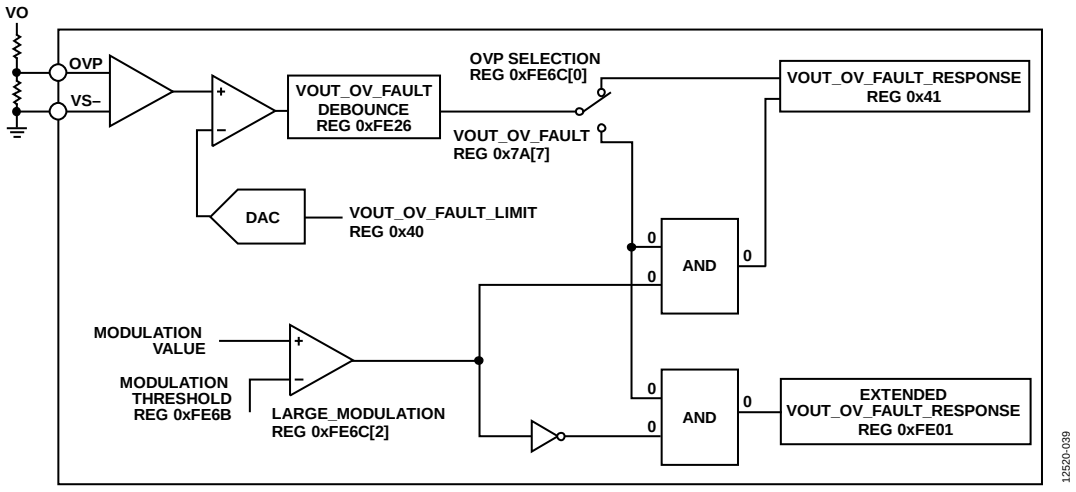

Figure 38. V_{OUT} Overvoltage Protection Circuit Implementation

In the overvoltage detection block, there is an internal analog comparator to detect the output voltage and generate the VOUT_OV_FAULT flag when an overvoltage condition occurs. The overvoltage reference voltage is set in Register 0x40. The debounce time of the flag setting can be programmed for 0 µs, 1 µs, 2 µs, or 8 µs, using Register 0xFE26[7:6]. There is also a 40 ns propagation delay, which is measured from the time when the OVP voltage exceeds the threshold to the time when the comparator output status is changed.

In the modulation flag triggering block, the real-time modulation value is compared to the internal reference to generate the LARGE_MODULATION flag. Register 0xFE6C[2] sets the LARGE_MODULATION flag when the real-time modulation value exceeds the modulation threshold set by Register 0xFE6B.

In the overvoltage responses block, there are two groups of overvoltage protection responses: the VOUT_OV_FAULT_RESPONSE PMBus command, set in Register 0x41, and the extended VOUT_OV_FAULT_RESPONSE, set in Register 0xFE01[7:4].

There is a conditional OVP enable switch in Register 0xFE6C[0]. If the switch is cleared to 0, the conditional OVP function is disabled and the OVP response always follows the VOUT_OV_FAULT_RESPONSE PMBus command (Register 0x41).

If the switch is set to 1, the OVP response follows the VOUT_OV_FAULT_RESPONSE command or the extended VOUT_OV_FAULT_RESPONSE, depending on the status of the LARGE_ MODULATION flag.

For example, when using a direct parallel system, if the VS+ pin (Pin 2) and the VS– pin (Pin 1) in one power supply unit (PSU) are shorted and this PSU experiences overvoltage failure, all the PSUs detect the overvoltage signal. The LARGE_MODULATION flag identifies the failed PSU. Typically, the failed PSU shuts down, and the other PSUs continue to operate normally.

The modulation threshold is typically set with a value that is slightly less than the modulation limit setting in Register 0xFE3C; however, the modulation limit can change when the ADP1052 unit acts as a slave device to synchronize with an external clock (see the Switching Frequency and Synchronization Registers section for more information).

For more information about extended overvoltage protection, see the Manufacturer Specific Protection Responses section and the related register settings.

V_{OUT} Undervoltage Protection (UVP)

The V_{OUT} undervoltage protection feature follows PMBus specifications. The limits are programmed using the VOUT_UV_FAULT_LIMIT command (Register 0x44), and the responses are programmed in the VOUT_UV_FAULT_RESPONSE command (Register 0x45). When the voltage reading in the READ_VOUT command (Register 0x8B) falls below the VOUT_UV_FAULT_LIMIT value, the VOUT_UV_FAULT flag in Register 0x7A[4] is set.

During the period of the soft start ramp, the turn-on delay time is specified by the TON_DELAY command (Register 0x60), and the flag reenabled time is specified by Register 0xFE05[7:6]. The VOUT_UV_FAULT flag is always blanked. Under these conditions, an undervoltage condition never triggers the VOUT_UV_FAULT flag.

I_{OUT} Overcurrent Protection (OCP)

The I_{OUT} overcurrent protection feature in the ADP1052 follows PMBus specifications. The CS2 current sense information is used for I_{OUT} overcurrent protection. The limits are programmed in the IOUT_OC_FAULT_LIMIT command (Register 0x46), and the responses are programmed in the IOUT_OC_FAULT_RESPONSE command (Register 0x47). The IOUT_OC_FAULT flag in Register 0x78[4], Register 0x79[4], and Register 0x7B[7] is set when the current reading in the READ_IIN command exceeds the IOUT_OC_FAULT_LIMIT value.

When the I_{OUT} overcurrent fault is triggered, the ADP1052 can be programmed to enter constant current mode. Refer to the Constant Current Mode section for more information.

OT_FAULT and OT_WARNING

The overtemperature protection feature in the ADP1052 follows PMBus specifications. With the default setting, the OTP limit is programmed using the OT_FAULT_LIMIT command in Register 0x4F, and the response is programmed using the OT_FAULT_RESPONSE command (Register 0x50).

There is an overtemperature warning flag, OT_WARNING, in Register 0x7D[6]. The OT_WARNING limit is less than the OT_FAULT_LIMIT, with an overtemperature hysteresis specified by Register 0xFE2F[1:0].

When the temperature sensed at the RTD pin (Pin 23) exceeds the OT_WARNING limit, the OT_WARNING flag (Register 0x7D[6]) is set. When the temperature sensed at RTD pin exceeds the OT_FAULT_LIMIT, the OT_FAULT flag (Register 0x7D[7]) is set. The OT_FAULT and OT_WARNING flags clear when the temperature falls below the OT_WARNING limit (see Figure 39).

The OT_FAULT flag and the OT_WARNING flag can each be separately set to trigger the $\overline{\text{PGOOD}}$ flag and drive the PG/$\overline{\text{ALT}}$ pin (Pin 17) low.

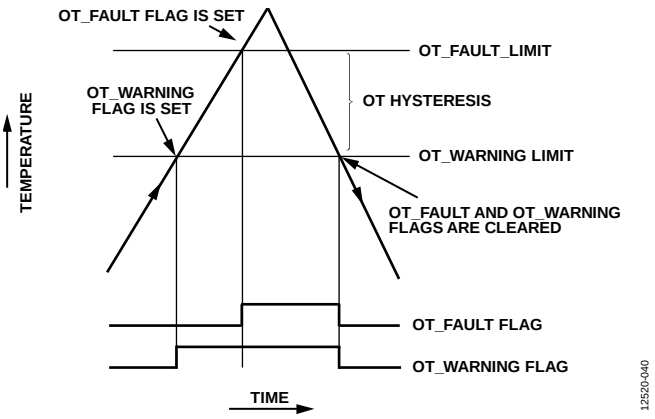

Figure 39. OT Protection and OT Warning Operation

Optionally, the user can process the RTD reading and use the linearization equation to determine the overtemperature protection setting. This allows the user to program the RTD threshold for greater overtemperature protection accuracy.

Alternatively, when using an analog temperature sensor, such as the STLM20, the OT_FAULT limit can still be programmed using the OT_FAULT_LIMIT command (Register 0x4F), but a conversion equation is needed.

Using Figure 35 as an example, assume that R1 and R2 are 20 kΩ and 10 kΩ, respectively, and the value in Register 0x4F is $T_{OT_SET_LIMIT}$.

If $T_{OT_SET_LIMIT} < 104$ decimal,

$$T_{OT_ACTUAL_LIMIT} = 1.6039 \times T_{OT_SET_LIMIT} - 48.8623$$

If $T_{OT_SET_LIMIT} \geq 104$ decimal

$$T_{OT_ACTUAL_LIMIT} = 0.801967 \times T_{OT_SET_LIMIT} + 34.5423$$

Table 8 shows some typical OTP threshold settings when using an analog temperature sensor, such as the STLM20.

Table 8. Typical OT Fault Limit Settings When Using an Analog Temperature Sensor

$T_{OT_SET_LIMIT}$ OT Limit Programmed in Register 0x4F (Decimal)	Actual OT Limit ($T_{OT_ACTUAL_LIMIT}$) (°C)
55	39.35
60	47.37
65	55.39
70	63.41
75	71.43
80	79.45
85	87.47
90	95.49
95	103.51
100	111.53
105	118.75
110	122.76
115	126.77
120	130.78
125	134.79
130	138.80

If the STLM20 is used, set the temperature hysteresis using Register 0xFE2F[1:0], as follows: 00 = 3.21°C, 01 = 6.42°C, 10 = 9.62°C, or 11 = 12.83°C.

VIN_ON and VIN_OFF

Two PMBus commands, VIN_ON (Register 0x35) and VIN_OFF (Register 0x36), allow the user to set the input voltage on and off limits independently.

The VIN_LOW flag in Register 0x7C[3] is set at initialization. When the input voltage exceeds the VIN_ON limit, the VIN_LOW flag clears. When the PSON signal asserts, the power conversion starts. When the input voltage drops below the VIN_OFF limit, the VIN_LOW flag is set and the power conversion stops. The delay time for the power conversion start and stop can be set separately by Register 0xFE29[3:2] and Register 0xFE29[4].

Alternatively, if the input voltage signal is not available before startup, the VIN_ON and VIN_OFF commands can be set for input voltage undervoltage protection using Register 0xFE29[5].

The VIN_UV_FAULT flag in Register 0x78[3], Register 0x79[3], and Register 0x7C[4] is set if the input voltage reading falls below the VIN_OFF limit.

The debounce time of the VIN_UV_FAULT flag setting can be programmed at 0 ms, 2.5 ms, 10 ms, or 100 ms, using Register 0xFE29[1:0]. Because the V_{IN} reading is averaged every 1 ms, there is an additional debounce time of up to 1 ms.

The response to the VIN_UV_FAULT flag is programmed via the VIN_UV_FAULT_RESPONSE bits (Register 0xFE02[7:4]). Refer to the Manufacturer Specific Protection Responses section and the related register settings for details.

MANUFACTURER SPECIFIC PROTECTION COMMANDS

CS1 Cycle-by-Cycle Current Limit

CS1 cycle-by-cycle current limit is implemented using an internal analog comparator (see Figure 25). When the voltage at the CS1 pin (Pin 6) exceeds the threshold set by Register 0xFE1B[6], the comparator output is triggered high and an internal flag (CS1_OCP, which is not accessible by the user and, therefore, not listed in the register tables) is triggered. There is a 105 ns (maximum) propagation delay in the comparators.

A blanking time of 0 ns, 40 ns, 80 ns, 120 ns, 200 ns, 400 ns, 600 ns, or 800 ns can be set to ignore the current spike at the beginning of the current signal. The blanking time is set in Register 0xFE1F[6:4].

During this time, the comparator output is ignored. The blanking time of the CS1_OCP flag can be referenced to the rising edges of OUTA, OUTB, OUTC, and OUTD, using Register 0xFE1D[3:0].

A debounce time of 0 ns, 40 ns, 80 ns, or 120 ns can also be added to improve the noise immunity of the CS1 OCP comparator output circuit. The debounce time is set using Register 0xFE1F[1:0]. This is the minimum time that the CS1 signal must be constantly above the threshold before it takes action.

Figure 40 shows an example of CS1 cycle-by-cycle current-limit timing, with the rising edge of OUTA as the blanking time reference. When the CS1_OCP flag is set, it does not clear until the beginning of the next switching cycle.

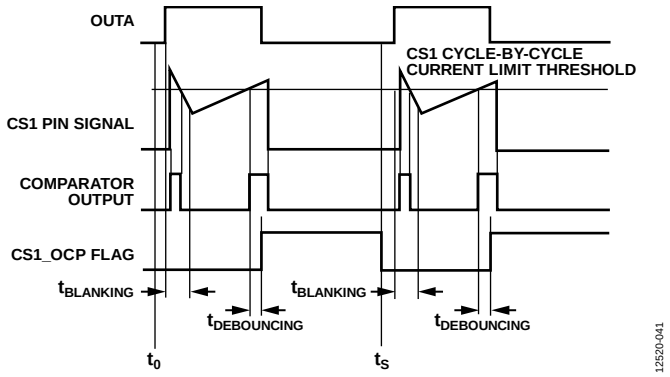

Figure 40. CS1 Cycle-by-Cycle Current-Limit Timing

When the CS1_OCP flag triggers, Register 0xFE08[6:5] and Register 0xFE0E[7:4] can be used to disable all PWM outputs for the remainder of the switching cycle; they are reenabled at the start of the next switching cycle. During one switching cycle, if the rising edge of a PWM output occurs after the CS1_OCP flag is triggered, the PWM remains enabled for the switching cycle.

To avoid current overstress of the body diode of the synchronous rectifiers, the cycle-by-cycle current-limit actions of the SR1 and SR2 outputs can be further programmed by Register 0xFE1E[1:0].

Program the SRx outputs in the same way as the other PWM outputs, or program them so that when the CS1_OCP flag triggers, the SR PWM output turns on. There is a 145 ns to 180 ns delay (dead time) between the CS1_OCP flag being triggered and the turning on of the SR PWM outputs. The falling edges continue to follow the programmed value.

The cycle-by-cycle current limit is always activated regardless of the I_{IN} overcurrent fast protection settings. The comparator output can be completely ignored by setting Register 0xFE1F[7].

I_{IN} Overcurrent Fast Protection

There is an internal counter, N. N is a positive integer or zero, with an initial value of 0. The counters work as follows:

When the CS1_OCP flag is triggered in one cycle (the CS1 OCP comparator is triggered high), N is counted as

$$N_{CURRENT} = N_{PREVIOUS} + 2$$

If the CS1_OCP flag is not triggered in one cycle and $N_{PREVIOUS}$ is greater than 0, then

$$N_{CURRENT} = N_{PREVIOUS} - 1$$

If the CS1_OCP flag is not triggered in one cycle and $N_{PREVIOUS}$ equals 0, then

$$N_{CURRENT} = 0$$

When the value of N reaches the limit specified by IIN_OC_FAST_FAULT_LIMIT, the IIN_OC_FAST_FAULT flag is triggered (see Figure 41).

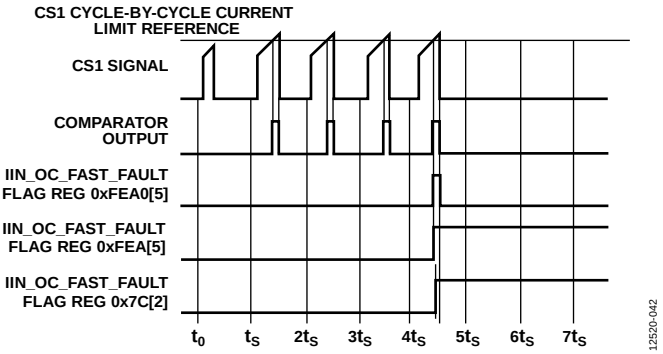

Figure 41. I_{IN} Overcurrent Fast Fault Triggering

For the single-ended topologies, such as forward converter and buck converter, a switching cycle consists of one cycle. For the double-ended topologies, such as full bridge converter, half bridge converter, and push pull converter, there are two cycles in a switching cycle. The IIN_OC_FAST_FAULT_LIMIT bits are in Register 0xFE1A[6:4]. In Figure 41, the IIN_OC_FAST_FAULT_LIMIT value is set to 8.

The response of the IIN_OC_FAST_FAULT flag can be programmed in the IIN_OC_FAST_FAULT_RESPONSE bits (Register 0xFE00[3:0]). See the Manufacturer Specific Protection Responses section and the register settings for the action details.

Matched Cycle-by-Cycle Current Limit in a Half Bridge Converter

For the half bridge converter, the cycle-by-cycle current-limit feature, described previously, cannot guarantee the balance of duty cycles between two half cycles in one switching cycle.

The imbalances of each half cycle can cause the center point voltage of the capacitive divider to drift from $V_{IN}/2$ toward either the ground or the input voltage, V_{IN}. This drift, in turn, can lead to output voltage regulation failure, transformer saturation, and doubling of the drain to source voltage (V_{DS}) stress of the synchronous rectifiers.

To compensate for these imbalances, matched cycle-by-cycle current limiting is implemented in the ADP1052 by forcing each cycle to be equalized, or matched, to the previous one.

When the matched cycle-by-cycle current limit is triggered, the duty cycle in the following half cycle exactly matches the actual duty cycle in the preceding half cycle. However, the cycle-by-cycle current limit is always the highest priority to terminate the PWM channels. For example, if one previous cycle has a duty cycle of 20% under a cycle-by-cycle current-limit condition, the following cycle should also be matched to a duty cycle of 20%. However, if the cycle-by-cycle current limit occurs in the following cycle and it must terminate the PWM with a smaller duty cycle, the cycle-by-cycle current limit takes higher priority and the duty cycle can be a value that is smaller than 20%.

The matched cycle-by-cycle current limit is enabled by Register 0xFE1D[6]. Register 0xFE1D[5:4] sets the PWM pairs for the matched cycle-by-cycle current limit.

CS3 Overcurrent Protection

CS3 overcurrent protection provides alternative output overcurrent protection if the CS2 current sense is not available. The reading is calculated from the CS1 and duty cycle readings.

The CS3_OC_FAULT flag (Register 0xFEA0[3]) is set when the CS3 current reading of the eight most significant bits (MSBs) in Register 0xFEA9 exceeds the CS3_OC_FAULT_LIMIT that is programmed in Register 0xFE6A. The debounce time of the flag setting can be programmed at 0 ms, 10 ms, 20 ms, or 200 ms in Register 0xFE19[6:5]. The response of the CS3_OC_FAULT flag is programmed in the CS3_OC_FAULT_RESPONSE bits (Register 0xFE01[3:0]). See the Manufacturer Specific Protection Responses section and the register settings for specific action information.

Synchronous Rectification (SR) Reverse Current Protection

In SR applications, the reverse current may flow from V_{OUT} through the output inductor, SRs, and current sense resistor to ground. If the SRs are turned off during a large reverse current condition, the high voltage stress caused by the large di/dt of current flowing into the output inductor may damage the synchronous rectifiers.

An analog comparator with programmable references implements the SR reverse current detection. The reverse current protection limit, SR_RC_FAULT_LIMIT, is programmed using Register 0xFE1A[2:0]. If the negative differential voltage between the CS2− pin (Pin 3) and CS2+ pin (Pin 4) falls below the value programmed in Register 0xFE1A[2:0], the SR_RC_FAULT flag is triggered. The debounce time for triggering the SR_RC_FAULT flag is 40 ns or 200 ns, set by Register 0xFE1A[3].

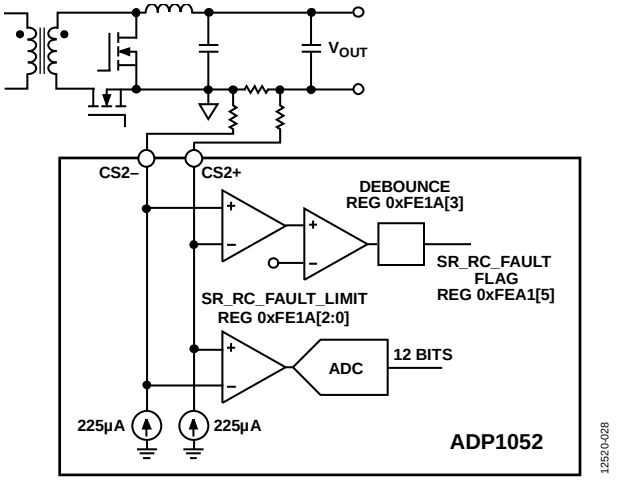

Figure 42. SR FET Reverse Current Protection

To suppress the reverse current, the SR_RC_FAULT flag response is set in the SR_RC_FAULT_ RESPONSE bits (Register 0xFE03[7:4]). In addition to the three response options of continuing operation without interruption, disabling SR1 and SR2, and disabling all the PWM outputs, there is a fourth fault response mode: changing the rising edge position of SR1 and SR2. Using this protection mode, the rising edges of SR1 and SR2 each maintain a fixed value, effective from the next switching cycle (typically SR1 and SR2 are set to 50% duty cycle for best performance). The fixed values of the rising edge timings for SR1 and SR2 can be determined as follows:

$$t_{Rx} + t_{MODU_LIMIT} - t_{OFFSET}$$

where:
t_{Rx} is the timing of the rising edges of SR1 and SR2 (see Figure 68).
t_{MODU_LIMIT} is the modulation limit defined in Register 0xFE3C.
t_{OFFSET} is the offset setting in Register 0xFE68.

After the fault flag is cleared, SR1 and SR2 can be set to return immediately to normal condition or follow the soft recovery process, as specified in Register 0xFE03[5:4]. For the best reverse current protection performance, use the previously defined settings to fine tune the SR1 and SR2 PWM timing.

Using this protection mode to set the 50% duty cycle operation of the SR1 and SR2 signals discharges energy in the output back to the input and suppresses the reverse current. Accordingly, the drain to source voltage (V_{DS}) stress of the synchronous rectifiers is suppressed. See the Manufacturer Specific Protection Responses section and the register settings for specific action information.

FLAGIN Protection

The SYNI/FLGI pin (Pin 13) can be configured in flag input mode (FLGI). An external signal can be sent to the ADP1052 to trigger an action. The polarity of the external signal is configured by the FLGI polarity bit (Register 0xFE12[2]). When the ADP1052 detects an external signal, the FLAGIN flag is set. The response to the FLAGIN flag is programmed in the FLAGIN_RESPONSE bits (Register 0xFE03[3:0]). See the Manufacturer Specific Protection Responses section and the register settings for the more information about the actions that can be programmed.

V_{DD} OVLO Protection

The ADP1052 has built-in overvoltage protection (OVP) on its supply rail. The V_{DD} overvoltage response bits (VDD_OV_ RESPONSE), found in Register 0xFE05[5:4], are used to specify the response to a V_{DD} overvoltage condition.

If Register 0xFE05[5] = 0, the VDD_OV flag is set and the ADP1052 shuts down when the V_{DD} voltage rises above the OVLO threshold. When the V_{DD} overvoltage condition ends, the VDD_OV flag is cleared and the ADP1052 downloads the EEPROM contents before restarting with a soft start process. Program the debounce time of the VDD_OV flag using Register 0xFE05[4].

If Register 0xFE05[5] = 1, the VDD_OV flag is always cleared, regardless of V_{DD} voltage conditions. The ADP1052 continues to operate without interruption. However, programming the VDD_OV flag response as always cleared is not recommended.

MANUFACTURER SPECIFIC PROTECTION RESPONSES

For the VDD_OV flag and protection action, see the VDD OVLO Protection section.

The following flags can be configured to trigger protection responses:

- IIN_OC_FAST_FAULT
- VOUT_OV_FAULT
- CS3_OC_FAULT
- VIN_UV_FAULT
- FLAGIN
- SR_RC_FAULT

The VOUT_OV_FAULT flag, which triggers the manufacturer specific protection in Register 0xFE01[7:4], is used for conditional overvoltage protection only. See the VOUT Overvoltage Protection (OVP) section for details.

Each of the aforementioned flags can be programmed individually to trigger one of the following responses:

- Continue operation without interruption (flag ignored)
- Disable SR1 and SR2
- Disable all PWM outputs

After the condition that triggered the flag is resolved and the flag is cleared, the ADP1052 can be programmed to respond as follows:

- After the flag reenable delay time elapses, reenable the disabled PWM outputs with a soft start sequence.
- Reenable the disabled PWM outputs immediately without the soft start process.
- Keep the PWM output disabled. A PSON reset signal must be used to reenable the PWM outputs with a soft start sequence.

For the SR_RC_FAULT flag, there is a fourth response option: the rising edges of SR1 and SR2 move to

$$t_{Rx} + t_{MODU_LIMIT} - t_{OFFSET}$$

where t_{Rx} represents t_{R1}, t_{R2}, and so forth.

After the flag is cleared, the ADP1052 can be programmed to respond as follows:

- SR1 and SR2 return to normal with soft start
- SR1 and SR2 return to normal without soft start

For more information, see the Synchronous Rectification (SR) Reverse Current Protection section.

The first flag that causes all PWM outputs to be disabled, and also requires a soft start if the PWM outputs are reenabled, is recorded as the first flag ID. For more information about use of the first flag ID, see the First Flag ID Recording section.

A flag reenable delay can be set for the listed manufacturer specific flags. This delay is used if the configured action for a flag is to reenable the PWM outputs after the flag reenable delay. This delay can be set to 250 ms, 500 ms, 1 sec, or 2 sec, using Register 0xFE05[7:6].

PEAK DATA TELEMETRY

To detect excursions from nominal conditions, the ADP1052 supports a unique feature of recording the peak telemetry data for the parameters listed in Table 9 (note that the values are recorded and latched in their respective registers).

After the system has reached regulation, the values listed in Table 9 are latched in the corresponding registers. The user can poll the device for the peak (minimum/maximum) values by performing a read operation from the corresponding registers. In addition, the user can reset the peak registers by writing the appropriate reset value (see Table 9).

To ensure that the correct peak value is recorded, a programmable update rate is provided in Register 0xFE65[5:3] that varies at speeds as slow as 2.6 ms and as fast as 82 µs. The slower the update rate, the better the averaged value; however, if the update rate is significantly larger than the duration of the peak excursion, the peak value is averaged over the time period defined by the update rate.

If the user intends to change the update rate on-the-fly, it is recommended to clear the registers as defined in Table 9 immediately after writing to the update rate command.

Table 9. Recording Peak Telemetry Data Latch Values

Parameter	Register Name	Register Address	Value Written to Reset Data
Minimum Output Voltage	MFR_VOUT_MIN	0xA4	0xFFFF
Maximum Output Voltage	MFR_VOUT_MAX	0xA5	0x0000
Maximum Output Current	MFR_IOUT_MAX	0xA6	0x0000
Maximum Output Power	MFR_POUT_MAX	0xA7	0x0000
Maximum Temperature	MFR_TEMPERATURE_MAX	0xC0	0x0000

POWER SUPPLY CALIBRATION AND TRIM

Every ADP1052 device is factory trimmed. If the ADP1052 is not trimmed in the power supply production environment, it is recommended that components with a 0.1% tolerance be used for the inputs to the CS1, CS2±, VS±, VF, and OVP pins to meet data sheet specifications (see Figure 1 and the Specifications section).

In the power supply production environment, the ADP1052 can calibrate items, such as output voltage and trim, for tolerance errors that are introduced by sense resistors and resistor dividers, as well as its own internal circuitry. The ADP1052 allows the user enough trim capability to trim for external components with a tolerance of ≤0.5%.

To unlock the trim registers for write access, the user must perform two consecutive write actions with the correct password (factory default value = 0xFF), using the TRIM_PASSWORD command (Register 0xD6). Any read or write action to another register in this device, occurring between these two write actions, interrupts the unlocking of the chip password.

The trim registers are Register 0xFE14 through Register 0xFE17, Register 0xFE20, Register 0xFE28, and Register 0xFE2A through Register 0xFE2C. For complete information about these registers, see the Manufacturer Specific Extended Commands Descriptions section.

I_{IN} TRIM (CS1 TRIM)

Using a DC Signal

A known dc voltage (Vx) is applied at the CS1 pin. The IIN_SCALE_MONITOR command (Register 0xD9) is set to 0x0001. The READ_IIN input current reading command (Register 0x89) generates a digital code (representing the input current in amperes) that is equal to the Vx voltage value. The CS1 gain trim register (Register 0xFE14) is adjusted until the input current reading in Register 0x89 reads the correct digital code.

Using an AC Signal

A known current (Ix) is applied to the PSU input. This current passes through a current transformer, a diode rectifier, and an external resistor (R_{CS1}) to convert the current information to a voltage (Vx). This voltage is fed into the CS1 pin. The IIN_SCALE_MONITOR is calculated as follows:

$$IIN_SCALE_MONITOR = (N_{PRI}/N_{SEC}) \times R_{CS1}$$

where N_{PRI} and N_{SEC} are the turns of the primary side and secondary side windings, respectively, of the current transformer.

The READ_IIN input current reading command generates a digital code, representing the input current, Ix. The CS1 gain trim register (Register 0xFE14) is adjusted until the input current reading in Register 0x89 reads the correct digital code.

I_{OUT} TRIM (CS2 TRIM)

CS2 Offset Trim

Offset errors are caused by the combined mismatch of the external level shifting resistors and the internal current sources. The level shift resistors must have a tolerance of ≤0.1%. The offset trim has both an analog and a digital component. With 0 V at the CS2± inputs, the desired ADC reading is 0 LSB.

The analog offset trim is performed to achieve a differential input voltage of 0 V. The digital offset trim is performed to achieve an ADC reading of 0 LSB. It is important to perform the offset trim in the following order:

1. Select high-side or low-side current sensing, using Register 0xFE19[7].
2. Set the current sense resistor value, using the IOUT_CAL_GAIN command (Register 0x38). It is important to note that the real IOUT_CAL_GAIN value should be slightly greater than the current sense resistor value, due to possible copper trace and soldering resistance. The real IOUT_CAL_GAIN value must be determined for accurate reading of the output current.
3. Set the digital offset trim value to 0x00, using Register 0xFE16.
4. Adjust the CS2 analog offset trim value (Register 0xFE17) until the value in Register 0xFEA8 reads as close as possible to 100 decimal.
5. Increase the CS2 digital offset trim register value, using Register 0xFE16, until the value in Register 0x8C reads 0 A.

The offset trim is then complete. With 0 V at the CS2± inputs, the ADC code reads 0, and the READ_IOUT reading is 0 A.

CS2 Gain Trim

After completing the offset trim, perform the gain trim to remove any mismatch that is introduced by the current sense resistor tolerance. The ADP1052 can trim for current sense resistors with a tolerance of ≤1%.

1. Apply a known current (I_{OUT}) across the sense resistor.
2. Adjust the CS2 gain trim value in Register 0xFE15 until the READ_IOUT value in Register 0x8C reads the value.

The CS2 circuit is now trimmed. After the current sense trim is complete, the IOUT_OC_FAULT_LIMIT and IOUT_OC_FAULT_RESPONSE are configured.

V_{OUT} TRIM (VS TRIM)

The voltage sense (VS) input at the VS± pins is optimized for sensing signals at 1 V and cannot sense a signal greater than 1.6 V. It is recommended that the nominal output voltage be reduced to 1 V for best performance. The resistor divider introduces errors that must be trimmed. The ADP1052 has enough trim range to trim errors that are introduced by resistors with a tolerance of ≤0.5%.

To trim the errors introduced by the resistor divider, use the following procedure:

1. Set the VOUT_COMMAND (Register 0x21) with the nominal output voltage value. Set the VOUT_SCALE_LOOP command (Register 0x29) and the VOUT_SCALE_MONITOR command (Register 0x2A), based on the resistor divider information.
2. Enable the power supply with the no load current. The voltage of the VS± pins is divided down by the VS resistor divider to give a target of 1 V at the VS± pins.
3. Adjust the VOUT_CAL_OFFSET trim (Register 0x23) to ensure that the output voltage is exactly the target output voltage.
4. Adjust the VS gain trim register (Register 0xFE20) when the READ_VOUT reading in Register 0x8B is the exact output voltage reading.

V_{IN} TRIM (VF GAIN TRIM)

The voltage sense inputs are optimized for the VF pin signals at 1 V and cannot sense a signal greater than 1.6 V. A resistor divider is required to divide the sensed voltage signal into a voltage of less than 1.6 V. It is recommended that the VF voltage signal be reduced to 1 V for best performance. The resistor divider introduces errors, which need to be trimmed.

Use the following procedure:

1. Set the VIN_SCALE_MONITOR command in Register 0xD8 based on the resistor divider information (see Figure 22) and the turn ratio information of the transformer

$$IN_SCALE_MONITOR = \frac{R2}{R1 + R2} \times \frac{N_{SEC}}{N_{PRI}}$$

   where N_{PRI} and N_{SEC} are the turns of the primary side and secondary side windings, respectively, of the transformer.
2. Apply the nominal input voltage at the no load condition to achieve a targeted voltage of approximately 1 V at the VF pin.
3. Adjust the VF gain trim register (Register 0xFE28) when the READ_VIN reading in Register 0x88 is the exact nominal voltage reading.
4. Adjust the input voltage compensation multiplier (Register 0xFE59) to make the READ_VIN reading match the exact input voltage at full load condition.

RTD AND OTP TRIM

The RTD requires two trims, one for the ADC and one for the current source. To use the internal linearization scheme, additional trimming procedures are required.

Trimming the Current Source

Register 0xFE2D[7:6] sets the value of the RTD current source to 10 µA, 20 µA, 30 µA, or 40 µA. Register 0xFE2D[5:0] can be used to fine tune the current value. By fine tuning the internal current source, component tolerance can be compensated and errors can be minimized. One LSB in Bits[5:0] = 160 nA.

A decimal value of 1 adds 160 nA to the current source set by Register 0xFE2D[7:6]; a decimal value of 63 adds 63 × 160 nA = 10.08 µA to the current source set by Register 0xFE2D[7:6].

Use Register 0xFE2D[7:6] to program a value for the current source, selecting the nearest possible option (10 µA, 20 µA, 30 µA, or 40 µA). Then use Register 0xFE2D[5:0] to achieve the finer step size.

For example, to use a value of 46 µA as the current source, follow these steps:

1. Place a known resistor (Rx) from the RTD pin to AGND.
2. Set Register 0xFE2D[7:6] to 11 binary (40 µA).
3. Increase the value of Register 0xFE2D[5:0], 1 LSB at a time, until the voltage at the RTD pin is V_{RTD} = 46 µA × Rx.

The current source is now calibrated and set to the factory default value.

Trimming the ADC

The first option for trimming the ADC uses the internal linearization scheme with 46 µA RTD current, which provides an accurate reading, expressed in degrees Celsius, read in the READ_TEMPERATURE command (Register 0x8D) in decimal format.

Use an R25 = 100 kΩ, 1% accuracy NTC thermistor with beta = 4250, 1% (such as the NCP15WF104F03RC) in parallel with an external resistor of 16.5 kΩ, 1%, with the ADP1052. With this NTC thermistor and resistor combination, the ADP1052 default current source trim is set to 46 µA to achieve the best possible accuracy over temperatures ranging from 85°C to 125°C.

If an external microcontroller is used, the RTD ADC value in Register 0xFEAB can be fed into the microcontroller, and a different linearization scheme can be implemented in terms of a best fit polynomial for the selected NTC characteristics.

APPLICATIONS CONFIGURATIONS

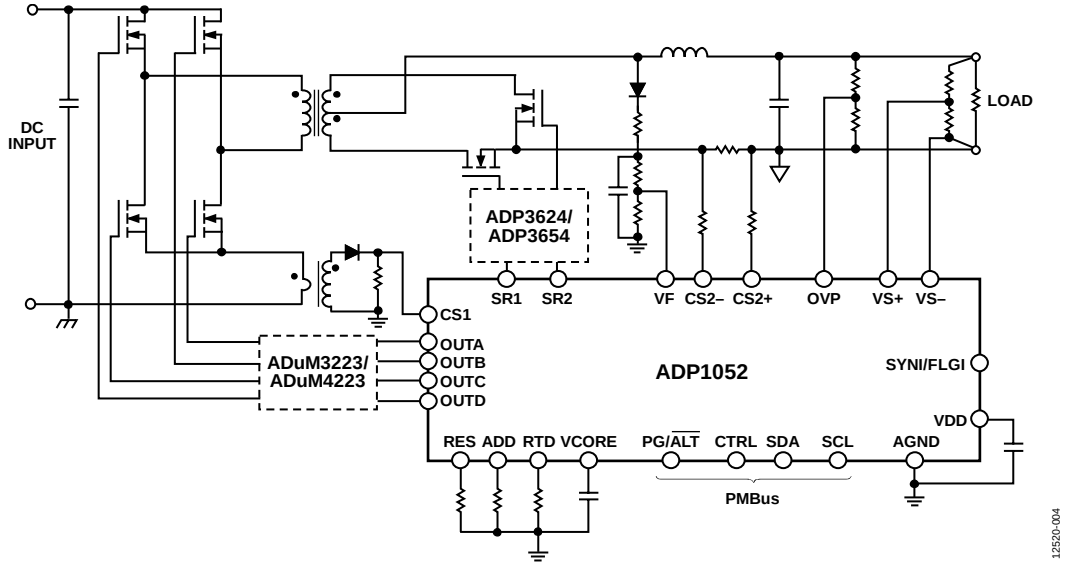

Figure 43. Full Bridge Converter

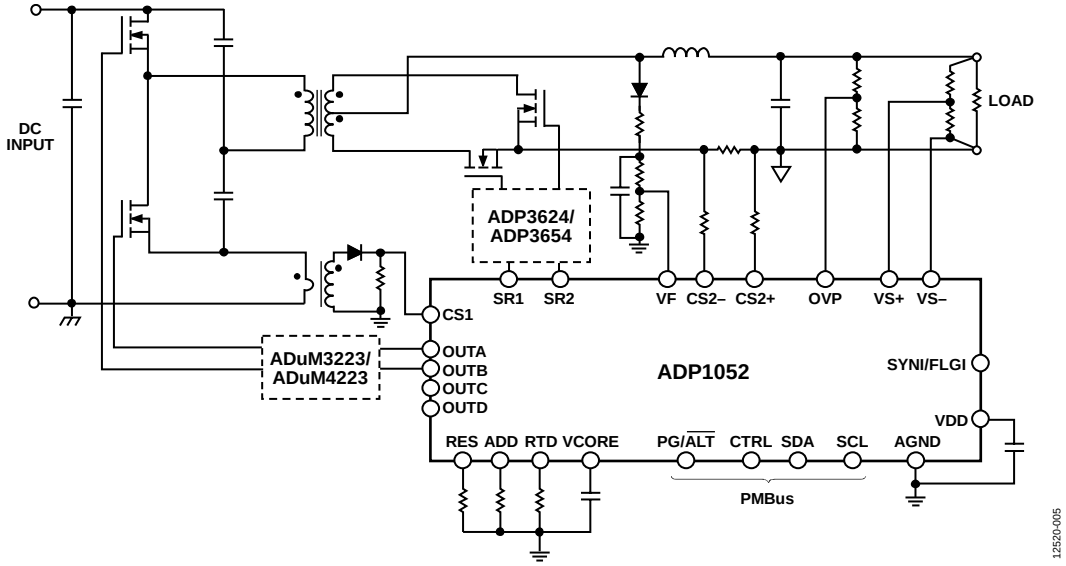

Figure 44. Half Bridge Converter

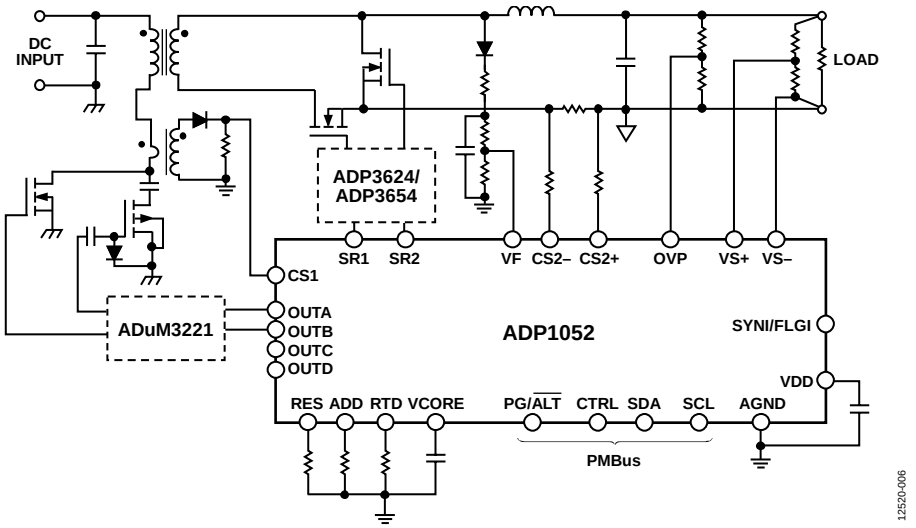

Figure 45. Active Clamp Forward Converter

LAYOUT GUIDELINES

This section explains best practices to ensure optimal performance of the ADP1052. In general, place all components of the ADP1052 control circuit as close to the ADP1052 as possible. The OVP pin and VS+ pin signals are referred to VS−. All other signals are referred to the AGND plane.

CS1 PIN

Route the traces from the current sense transformer to the ADP1052, parallel to each other. Keep the traces near each other, but far away from the switch nodes.

CS2+ AND CS2− PINS

Route the traces from the sense resistor to the ADP1052 parallel to each other. A Kelvin connection is recommended for the sense resistor. Keep the traces near each other, but far away from the switch nodes.

VS+ AND VS− PINS

Route the traces from the remote voltage sense point to the ADP1052 parallel to each other. Connect VS− to AGND, with a low ohmic connection. Keep the traces near each other, but far away from the switch nodes. Place a 100 nF capacitor from VS− to AGND to reduce the common-mode noise. If VS− is connected directly to AGND, the capacitor is not needed.

OUTA TO OUTD, SR1 AND SR2 PWM OUTPUTS

Place 10 Ω resistors between the PWM outputs and isolators or driver inputs, especially if the isolators and drivers are far from the ADP1052. Keep the traces far away from the switch nodes.

VDD PIN

Place decoupling capacitors as close as possible to the ADP1052. A 2.2 µF capacitor connected from VDD to AGND is recommended.

VCORE PIN

Place a 330 nF decoupling capacitor from the VCORE pin to AGND, as close as possible to the ADP1052.

RES PIN

Place a 10 kΩ, 0.1% resistor from the RES pin to AGND, as close as possible to the ADP1052.

SDA AND SCL PINS

Route the traces to the SDA and SCL pins parallel to each other. Keep the traces near each other, but far away from the switch nodes.

EXPOSED PAD

Solder the exposed pad under the ADP1052 to the PCB AGND plane.

RTD PIN

Route the traces (including the ground returning trace) from the thermistor to the ADP1052. Place the thermistor near the hotspot of the power supply, and keep the thermistor and the traces away from the switching node. Place the 1 nF filtering capacitor nearby, in parallel with the thermistor.

AGND PIN

Create an AGND ground plane on the adjacent layer of the ADP1052 and make a single point (star) connection to the power supply system ground.

PMBus/I²C COMMUNICATION

The PMBus slave allows a device to interface with a PMBus-compliant master device, as specified by the *PMBus Power System Management Protocol Specification* (Revision 1.2, September 6, 2010). The PMBus slave is a 2-wire interface that can communicate with other PMBus-compliant devices and is compatible in a multimaster, multislave bus configuration.

PMBus FEATURES

The function of the PMBus slave is to decode the command that is sent from the master device and respond as requested. Communication is established using a 2-wire interface with a clock line (SCL) and data line (SDA) that is similar to an I²C interface. The PMBus slave design externally moves chunks of 8-bit data (bytes) while maintaining compliance with the PMBus protocol. The PMBus protocol is based on the *System Management Bus (SMBus) Specification*, Version 2.0, August 2000. The SMBus specification is, in turn, based on the Philips *I²C Bus Specification*, Version 2.1, dated January 2000. The PMBus incorporates the following features:

- Slave operation on multiple device systems
- 7-bit addressing
- 100 kbps and 400 kbps data rates
- General call address support
- Support for clock low extension (clock stretching)
- Separate multibyte receive and transmit FIFOs
- Extensive fault monitoring

OVERVIEW

The PMBus slave module is a 2-wire interface that communicates with other PMBus-compliant devices. Its transfer protocol is based on the Philips I²C transfer mechanism. The ADP1052 is always configured as a slave device in the overall system. The ADP1052 communicates with the master device using one data pin (SDA, Pin 15) and one clock pin (SCL, Pin 14). Because the ADP1052 is a slave device, it cannot generate the clock signal; however, it is capable of stretching the SCL line to put the master device in a wait state when it is not ready to respond to the request of the master.

Communication initiates when the master device sends a command to the PMBus slave device. Commands can be read or write commands, and data transfers between the devices in a byte wide format. Commands can also be send commands; in that case, the command is executed by the slave device upon receiving the stop bit. The stop bit is the last bit in a complete data transfer, as defined in the PMBus/I²C communication protocol. During communication, the master and slave devices send acknowledge (A) or no acknowledge ($\overline{A}$) bits as a method of handshaking between devices. See the PMBus specification for a more detailed description of the communication protocol.

When communicating with the master device, it is possible for the PMBus slave to receive illegal or corrupted data. In this case, the PMBus slave must respond to the invalid command or data, as defined by the PMBus specification, and indicate to the master device that an error or fault condition has occurred. This method of handshaking is the first level of defense against inadvertent programming of the slave device that can potentially damage the chip or system.

The PMBus specification defines a set of generic PMBus commands that is recommended for a power management system; however, each PMBus device manufacturer can choose to implement and support certain commands that are deemed fit for the system. In addition, the PMBus device manufacturer can implement manufacturer specific commands, the functions of which are not included in the generic PMBus command set. The list of standard PMBus and manufacturer specific commands are found in the PMBus Command Set and Extended Command List: Manufacturer Specific sections.

PMBus/I²C ADDRESS

The PMBus address of the ADP1052 is set by connecting an external resistor from the ADD pin (Pin 22) to AGND. Table 10 lists the recommended resistor values and the associated PMBus addresses. Eight different addresses can be used.

Table 10. PMBus Address Settings and Resistor Values

PMBus Address	Resistor Value (kΩ)
0x70	10 (or connect the ADD pin directly to AGND)
0x71	31.6
0x72	51.1
0x73	71.5
0x74	90.9
0x75	110
0x76	130
0x77	150 (or connect the ADD pin directly to VDD)

The recommended resistor values in Table 10 can vary by ±2 kΩ. Therefore, it is recommended to use 1% tolerance resistors on the ADD pin.

The ADP1052 responds to the standard PMBus broadcast address (general call) of 0x00. However, when more than one ADP1052 device is connected to the master device, do not use the general call address because the data returned by multiple slave devices is corrupted. For more information, see the General Call Support section.

DATA TRANSFER

Format Overview

The PMBus slave follows the transfer protocol of the SMBus specification, which is based on the fundamental transfer protocol format of the I²C bus specification. Data transfers are byte wide, lower byte first. Each byte is transmitted serially, most significant bit (MSB) first. A typical transfer is shown in Figure 46. See the SMBus and I²C specifications for detailed descriptions of the transfer protocols. Figure 46 through Figure 53 use the abbreviations listed in Table 11.

Table 11. Abbreviations Used in Data Transfer Diagrams

Abbreviation	Description	Setting[1]
S	Start condition	N/A
P	Stop condition	N/A
Sr	Repeated start condition	N/A
$\overline{W}$	Write bit	0
R	Read bit	1
A	Acknowledge bit	0
$\overline{A}$	No acknowledge bit	1

[1] N/A means not applicable.

Command Overview

Data transfer using the PMBus slave is established using PMBus commands. The PMBus specification requires that all PMBus commands start with a slave address, with the R/$\overline{W}$ bit cleared to 0, followed by the command code. All PMBus commands that are supported by the ADP1052 follow one of the protocol types shown in Figure 47 through Figure 53.

The ADP1052 also supports manufacturer specific extended commands. These commands follow the same protocol as the standard PMBus commands; however, the command code consists of two bytes that range from 0xFF00 to 0xFFAF.

Using the manufacturer specific extended commands, the PMBus device manufacturer can add an additional 256 manufacturer specific commands to its PMBus command set.

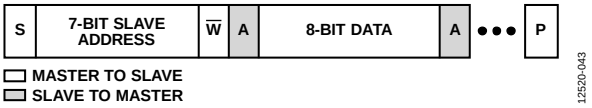

Figure 46. Basic Data Transfer

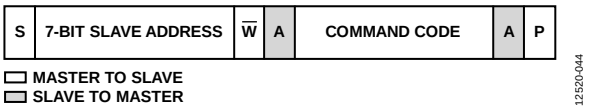

Figure 47. Send Byte Protocol

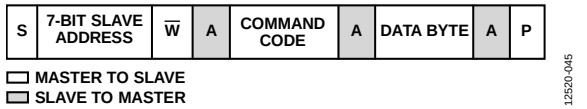

Figure 48. Write Byte Protocol

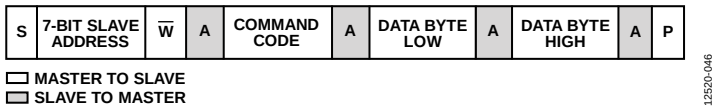

Figure 49. Write Word Protocol

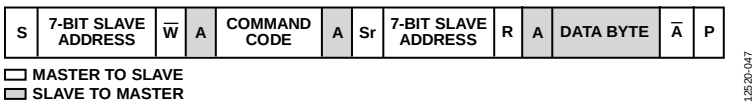

Figure 50. Read Byte Protocol

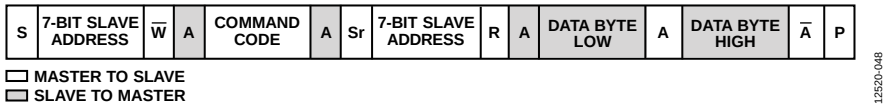

Figure 51. Read Word Protocol

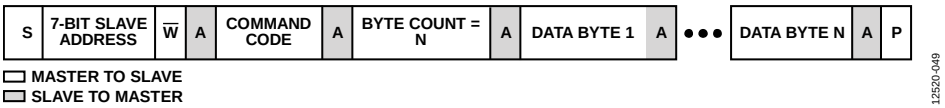

Figure 52. Block Write Protocol

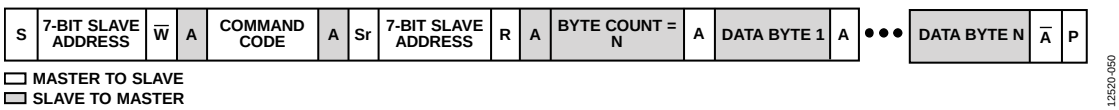

Figure 53. Block Read Protocol

Clock Generation and Stretching

The ADP1052 is always a PMBus slave device in the overall system; therefore, the device never needs to generate the clock, which is done by the master device in the system. However, the PMBus slave device is capable of clock stretching to force the master into a wait state. By stretching the SCL signal during the low period, the slave device communicates to the master device that it is not ready and the master device must wait.

Conditions in which the PMBus slave device stretches the SCL line low include the following:

- The master device is transmitting at a higher baud rate than the slave device.
- The receive buffer of the slave device is full and must be read before continuing. This prevents a data overflow condition.
- The slave device is not ready to send data that the master has requested.

Note that the PMBus slave device can stretch the SCL line during the low period only. Also, whereas the I²C specification allows indefinite stretching of the SCL line, the PMBus specification limits the maximum time that the SCL line can be stretched, or held low, to 25 ms. After this time period, the slave device must release the communication lines and reset its state machine.

Start and Stop Conditions

Start and stop conditions involve serial data transitions when the serial clock is at a logic high level. The PMBus slave device monitors the SDA and SCL lines to detect the start and stop conditions and transition its internal state machine accordingly. Typical start and stop conditions are shown in Figure 54.

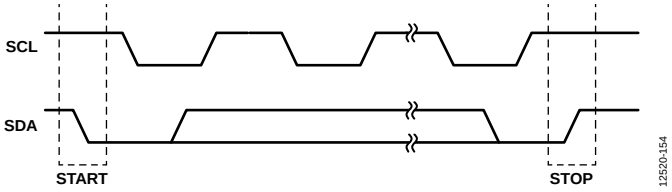

Figure 54. Start and Stop Transitions

GENERAL CALL SUPPORT

The PMBus slave is capable of decoding and acknowledging a general call address. The PMBus slave device responds to both its own address and the general call address (0x00). The general call address enables all devices on the PMBus to be written to simultaneously.

Note that all PMBus commands must start with a slave address, with the R/$\overline{W}$ bit cleared to 0 and followed by the command code. This is also true when using the general call address to communicate with the PMBus slave device.

10-BIT ADDRESSING

The ADP1052 does not support 10-bit addressing as defined in the I²C specification.

FAST MODE

Fast mode, with a data rate of 400 kbps, uses essentially the same mechanics as the standard mode of operation; the electrical specifications and timing are most affected. The PMBus slave is capable of communicating with a master device operating in fast mode or in standard mode, which has a data rate of 100 kbps.

FAULT CONDITIONS

The PMBus protocol provides a comprehensive set of fault conditions that must be monitored and reported. These fault conditions can be grouped into two major categories: communication faults and monitoring faults.

Communication faults are error conditions associated with the data transfer mechanism of the PMBus protocol. Monitoring faults are error conditions associated with the operation of the ADP1052, such as output overvoltage protection. These fault conditions are described in detail in the Power Monitoring, Flags, and Fault Responses section.

TIMEOUT CONDITIONS

The SMBus specification includes three clock stretching specifications related to timeout conditions.

A timeout condition occurs if any single SCL clock pulse is held low for longer than the minimum $t_{TIMEOUT}$ value of 25 ms. Upon detecting the timeout condition, the PMBus slave device has 10 ms to abort the transfer, release the bus lines, and be ready to accept a new start condition. The device initiating the timeout is required to hold the SCL clock line low for at least the maximum $t_{TIMEOUT}$ value of 35 ms, guaranteeing that the slave device is given enough time to reset its communication protocol.

DATA TRANSMISSION FAULTS

Data transmission faults occur when two communicating devices violate the PMBus communication protocol, as specified in the PMBus specification. See the PMBus specification for more information about each fault condition.

Corrupted Data, Packet Error Checking (PEC)

Packet error checking is not supported by the ADP1052.

Sending Too Few Bits

Transmission is interrupted by a start or stop condition before a complete byte (eight bits) has been sent. This function is not supported; any transmitted data is ignored.

Reading Too Few Bits

Transmission is interrupted by a start or stop condition before a complete byte (eight bits) has been read. This function is not supported; any received data is ignored.

Host Sends or Reads Too Few Bytes

If a host ends a packet with a stop condition before the required bytes are sent/received, it is assumed that the host intended to stop the transfer. Therefore, the PMBus does not consider this to be an error and takes no action, except to flush any remaining bytes in the transmit FIFO.

Host Sends Too Many Bytes

If a host sends more bytes than are expected for the corresponding command, the PMBus slave considers this a data transmission fault and responds as follows:

1. Issues a no acknowledge for all unexpected bytes as they are received.
2. Flushes and ignores the received command and data.
3. Sets the CML bit in the STATUS_BYTE command register (Register 0x78[1]).

Host Reads Too Many Bytes

If a host reads more bytes than are expected for the corresponding command, the PMBus slave considers this a data transmission fault and responds as follows:

1. Sends all 1s (0xFF) for as long as the host continues to request data.
2. Sets the CML bit in the STATUS_BYTE command register (Register 0x78[1]).

Device Busy

The PMBus slave device is too busy to respond to a request from the master device. This condition is not supported in the ADP1052.

DATA CONTENT FAULTS

Data content faults may occur when the data transmission is successful, but the PMBus slave device cannot process the data that is received from the master device.

Improperly Set Read Bit in the Address Byte

All PMBus commands start with a slave address with the R/$\overline{W}$ bit cleared to 0, followed by the command code. If a host starts a PMBus transaction with R/$\overline{W}$ set in the address phase (equivalent to an I^2C read), the PMBus slave considers this a data content fault and responds as follows:

1. Acknowledges (ACK or A) the address byte.
2. Issues a no acknowledge (NACK or $\overline{A}$) for the command and data bytes.
3. Sends all 1s (0xFF) as long as the host continues to request data.
4. Sets the CML bit in the STATUS_BYTE command register (Register 0x78[1]).

Invalid or Unsupported Command Code

If an invalid or unsupported command code is sent to the PMBus slave, the code is considered to be a data content fault, and the PMBus slave responds as follows:

1. Issues a no acknowledge (NACK or $\overline{A}$) for the illegal/unsupported command byte and data bytes.
2. Flushes and ignores the received command and data.
3. Sets the CML bit in the STATUS_BYTE command register (Register 0x78[1]).

Reserved Bits

Accesses to reserved bits are not a fault. Writes to reserved bits are ignored, and reads from reserved bits return undefined data.

Write to Read Only Commands

If a host performs a write to a read only command, the PMBus slave considers this a data content fault and responds as follows:

1. Issues a no acknowledge (NACK or $\overline{A}$) for all unexpected data bytes as they are received.
2. Flushes and ignores the received command and data.
3. Sets the CML bit in the STATUS_BYTE command register (Register 0x78[1]).

Note that this is the same error described in the Host Sends Too Many Bytes section.

Read from Write Only Commands

If a host performs a read from a write only command, the PMBus slave considers this a data content fault and responds as follows:

1. Sends all 1s (0xFF) for as long as the host continues to request data.
2. Sets the CML bit in the STATUS_BYTE command register (Register 0x78[1]).

Note that this is the same error response that is described in the Host Reads Too Many Bytes section.

EEPROM

The ADP1052 has a built-in EEPROM controller that communicates with the embedded 8 kB (or 8192 bytes) EEPROM. The EEPROM, also called Flash®/EE, is partitioned into two major blocks: the information block and the main block. The information block contains 128 8-bit bytes (for internal use only), and the main block contains 8192 8-bit bytes. The main block is further partitioned into 16 pages, with each page containing 512 bytes.

EEPROM FEATURES

The function of the EEPROM controller is to decode the operation that is requested by the ADP1052 and to provide the necessary timing to the EEPROM interface. Data is written to or read from the EEPROM, as requested by the decoded command. Features of the EEPROM controller include

- Separate page erase functions for each page in the EEPROM
- Single byte and multibyte (block) read of the information block with up to 128 bytes at a time
- Single byte and multibyte (block) write and read of the main block with up to 256 bytes at a time
- Automatic upload on startup, from the user settings to the internal registers
- Separate commands to upload and download data, from the factory default or user settings to the internal registers

EEPROM OVERVIEW

The EEPROM controller provides an interface between the ADP1052 core logic and the built-in EEPROM. The user can control data access to and from the EEPROM through this controller interface. Different PMBus commands are available for the read, write, and erase operations to the EEPROM.

Communication is initiated by the master device sending a command to the PMBus slave device to access data from or send data to the EEPROM. Read, write, and erase commands are supported. Data is transferred between devices in a byte wide format. Using a read command, data is received from the EEPROM and transmitted to the master device. Using a write command, data is received from the master device and stored in the EEPROM through the EEPROM controller.

PAGE ERASE OPERATION

The main block consists of 16 equivalent pages of 512 bytes each, numbered Page 0 to Page 15. Page 0 and Page 1 of the main block are reserved for storing the default settings and user settings, respectively. The user cannot perform a page erase operation on Page 0 or Page 1. Page 3 is reserved for storing the power board parameters for the GUI.

Only Page 4 to Page 15 of the main block can be used to store data. To erase any page from Page 4 to Page 15, the EEPROM must first be unlocked for access. For instructions on how to unlock the EEPROM, see the Unlock the EEPROM section.

Each page of the main block, from Page 4 to Page 15, can be individually erased using the EEPROM_PAGE_ERASE command (Register 0xD4). For example, to perform a page erase of Page 10, execute the following command, as shown in Figure 55.

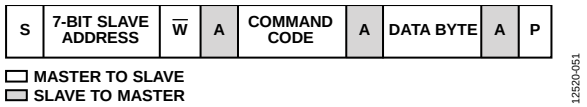

Figure 55. Example Erase Command

In this example, command code = 0xD4 and data byte = 0x0A.

Note that it is important to wait at least 35 ms for the page erase operation to complete before executing the next PMBus command.

The EEPROM allows erasing of whole pages only; therefore, to change the data of any single byte in a page, the entire page must first be erased (set to logic high) for that byte to be writeable. Subsequent writes to any bytes in that page are allowed only if that byte has not been previously written to a logic low.

READ OPERATION (BYTE READ AND BLOCK READ)

Read from Main Block, Page 0 and Page 1

Page 0 and Page 1 of the main block are reserved for storing the default settings and the user settings, respectively, and are intended to prevent third party access to this data. To read from Page 0 or Page 1, the user must first unlock the EEPROM (see the Unlock the EEPROM section). After the EEPROM is unlocked, Page 0 and Page 1 are readable, using the EEPROM_DATA_xx commands as described in the Read from Main Block, Page 2 to Page 15 section. Note that when the EEPROM is locked, a read from Page 0 and Page 1 returns invalid data.

Read from Main Block, Page 2 to Page 15

Data in Page 2 to Page 15 of the main block is always readable, even with the EEPROM locked. The data in the EEPROM main block can be read one byte at a time or multiple bytes in series, using the EEPROM_DATA_xx commands (Register 0xB0 to Register 0xBF).

Before executing this command, the user must program the number of bytes to read, using the EEPROM_NUM_RD_BYTES command (Register 0xD2). Also, the user can program the offset from the page boundary where the first read byte is returned, using the EEPROM_ADDR_OFFSET command (Register 0xD3).

In the following example, three bytes from Page 4 are read from the EEPROM, starting from the sixth byte of that page.

1. Set number of return bytes = 3.

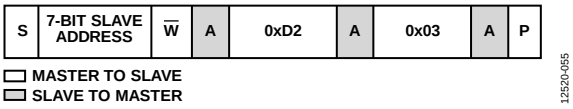

Figure 56. Set the Return Bytes Number (= 3)

2. Set the address offset = 5.

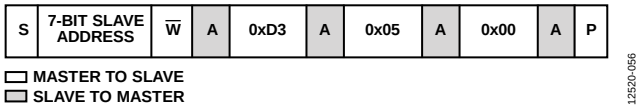

Figure 57. Set the Address Offset (= 5)

3. Read three bytes from Page 4.

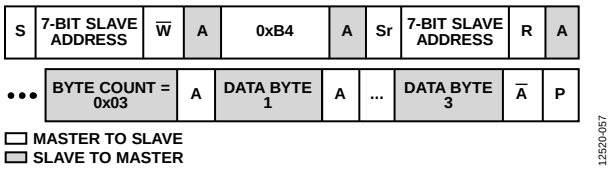

Figure 58. Read Three Bytes from Page 4

Note that the block read command can read a maximum of 256 bytes for any single transaction.

WRITE OPERATION (BYTE WRITE AND BLOCK WRITE)

The user cannot write directly to the information block; this block is used by the ADP1052 to store the first flag information (see the First Flag ID Recording section).

Write to Main Block, Page 0 and Page 1

Page 0 and Page 1 of the main block are reserved for storing the default settings and the user settings, respectively. The user cannot perform a direct write operation to Page 0 or Page 1 using the EEPROM_DATA_xx commands. If the user writes to Page 0, Page 1 returns a no acknowledge. To program the register contents of Page 1 of the main block, it is recommended that the STORE_USER_ALL command be used (Register 0x15). See the Save Register Settings to the User Settings section.

Write to Main Block, Page 2 to Page 15

Before performing a write to Page 2 through Page 15 of the main block, the user must first unlock the EEPROM (see the Unlock the EEPROM section).

Data in Page 2 to Page 15 of the EEPROM main block can be programmed (written to) one byte at a time or multiple bytes in series, using the EEPROM_DATA_xx commands (Register 0xB0 to Register 0xBF). Before executing this command, the user can program the offset from the page boundary where the first byte is written, using the EEPROM_ADDR_OFFSET command (Register 0xD3).

If the targeted page has not yet been erased, the user can erase the page, as described in the Page Erase Operation section.

In the following example, four bytes are written to Page 9, starting from the 257th byte of that page.

1. Set the address offset = 256.

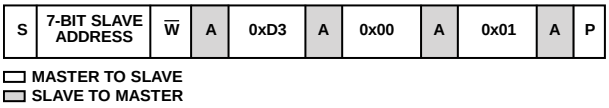

Figure 59. Set the Address Offset (= 256)

2. Write four bytes to Page 9.

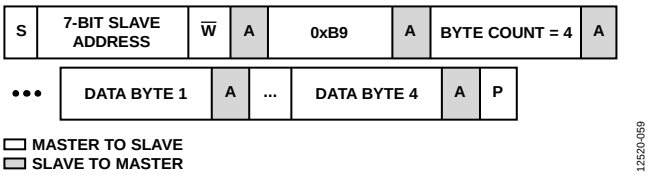

Figure 60. Write Four Bytes to Page 9

Note that the block write command can write a maximum of 256 bytes for any single transaction.

EEPROM PASSWORD

On ADP1052 VDD power-up, the EEPROM is locked and protected from accidental writes or erases. Only reads from Page 2 to Page 15 are allowed when the EEPROM is locked. Before any data can be written (programmed) to the EEPROM, the EEPROM must be unlocked for write access. After it is unlocked, the EEPROM is opened for reading, writing, and erasing.

On power-up, Page 0 and Page 1 are also protected from read access. The EEPROM must first be unlocked to read these pages.

Unlock the EEPROM

To unlock the EEPROM, perform two consecutive writes with the correct password (default = 0xFF), using the EEPROM_PASSWORD command (Register 0xD5). The EEPROM_UNLOCKED flag (Register 0xFEA2[3]) is set to indicate that the EEPROM is unlocked for write access.

Lock the EEPROM

To lock the EEPROM, write any byte other than the correct password, using the EEPROM_PASSWORD command (Register 0xD5). The EEPROM_UNLOCKED flag is cleared to indicate that the EEPROM is locked from write access.

Change the EEPROM Password

To change the EEPROM password, first write the correct password, using the EEPROM_PASSWORD command (Register 0xD5). Immediately write the new password, using the same command. The password is now changed to the new password.

DOWNLOADING EEPROM SETTINGS TO INTERNAL REGISTERS

Download User Settings to Registers

The user settings are stored in Page 1 of the EEPROM main block. These settings are downloaded from the EEPROM into the registers under the following conditions:

- On power-up: the user settings are automatically downloaded into the internal registers, powering up the device in a state previously saved by the user.
- On execution of the RESTORE_USER_ALL command (Register 0x16): this command allows the user to force a download of the user settings from Page 1 of the EEPROM main block into the internal registers.

Download Factory Settings to Registers

The factory default settings are stored in Page 0 of the EEPROM main block. The factory settings can be downloaded from the EEPROM into the internal registers, using the RESTORE_DEFAULT_ALL command (Register 0x12).

When this command is executed, the EEPROM password is also reset to the factory default setting of 0xFF.

SAVING REGISTER SETTINGS TO THE EEPROM

The register settings cannot be saved to the factory scratch pad located in Page 0 of the EEPROM main block. This is to prevent the user from accidentally overriding the factory trim settings and the default register settings.

Save Register Settings to the User Settings

The register settings can be saved to the user settings located in Page 1 of the EEPROM main block using the STORE_USER_ALL command (Register 0x15). Before this command can be executed, the EEPROM must first be unlocked for writing (see the Unlock the EEPROM section).

After the register settings are saved to the user settings, any subsequent power cycle automatically downloads the latest stored user information from the EEPROM into the internal registers.

Note that execution of the STORE_USER_ALL command automatically performs a page erase on Page 1 of the EEPROM main block, after which the registers are stored in the EEPROM. Therefore, it is important to wait at least 40 ms for the operation to complete before executing the next PMBus command.

EEPROM CRC CHECKSUM

As a simple method of checking that the values downloaded from the EEPROM and the internal registers are consistent, a CRC checksum is implemented.

When the data from the internal registers is saved to the EEPROM (Page 1 of the main block), the total number of 1s from all the registers is counted and written into the EEPROM as the last byte of information. This is called the CRC checksum.

When the data is downloaded from the EEPROM into the internal registers, a similar counter is saved that sums all 1s from the values loaded into the registers. This value is compared with the CRC checksum from the previous upload operation.

If the values match, the download operation was successful. If the values differ, the EEPROM download operation failed, and the CRC_FAULT flag is set (Register 0xFEA2[2]).

To read the EEPROM CRC checksum value, execute the EEPROM_CRC_CHKSUM command (Register 0xD1). This command returns the CRC checksum accumulated in the counter during the download operation.

Note that the CRC checksum is an 8-bit cyclical accumulator that wraps around to 0 when 255 is reached.

GUI SOFTWARE

Free GUI software is available for programming and configuring the ADP1052. The ADP1052 GUI, which is intuitive by design, dramatically reduces power supply design and development time.

The software includes filter design and power supply PWM topology windows. The ADP1052 GUI is also an information center, displaying the status of all readings, monitoring, and flags on the ADP1052.

For more information about the ADP1052 GUI, contact Analog Devices, Inc., for the latest software and a user guide. Evaluation boards are also available by contacting Analog Devices or by visiting http://www.analog.com/digitalpower.

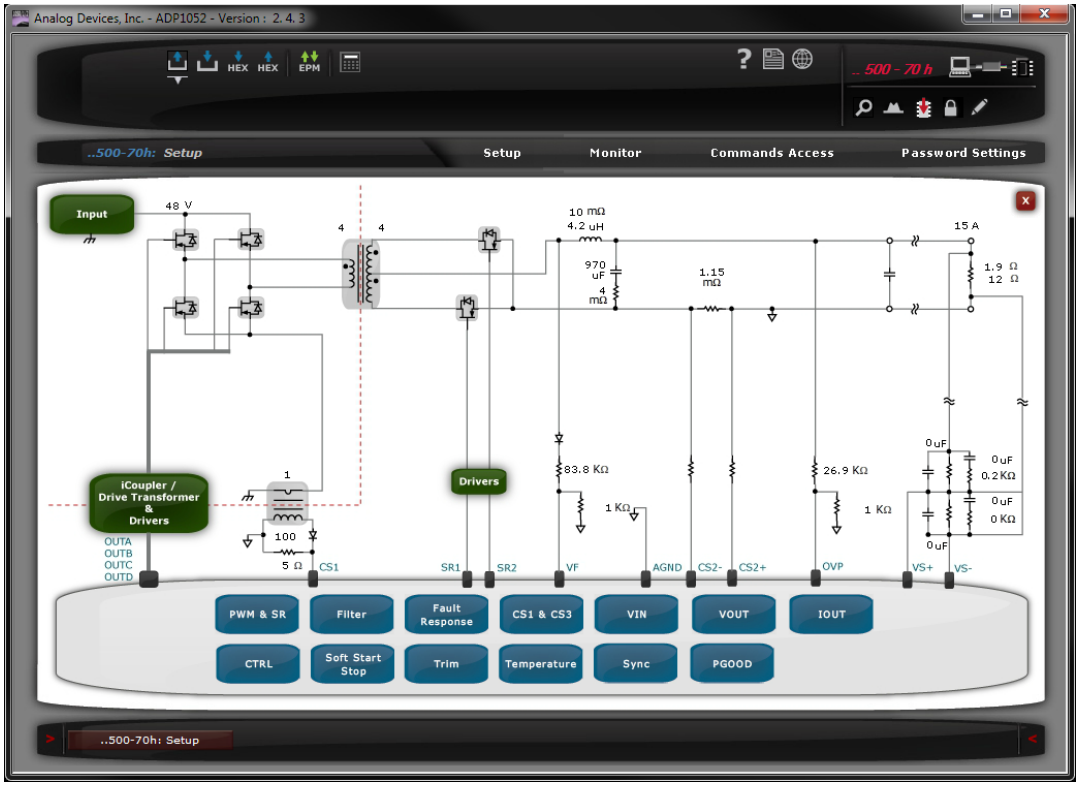

Figure 61. GUI Software

PMBus COMMAND SET

Table 12. PMBus/SMBus Command List Overview

Command Code	Command Name	PMBus/ SMBus Transaction Type[1]	Number of Data Bytes	Default Value[2]	Description
0x01	OPERATION	R/W	1	0x00	Turns the unit on and off in conjunction with the input from the CTRL pin.
0x02	ON_OFF_CONFIG	R/W	1	0x00	Requires a combination of the CTRL pin and serial bus commands to turn the unit on and off.
0x03	CLEAR_FAULTS	Send byte	0	N/A	Clears all bits in the PMBus status registers simultaneously.
0x10	WRITE_PROTECT	R/W	1	0x00	Protects against accidental writes to the PMBus device. Reads are allowed.
0x12	RESTORE_DEFAULT_ALL	Send byte	0	N/A	Downloads the factory default settings from EEPROM (Page 0) to registers.
0x15	STORE_USER_ALL	Send byte	0	N/A	Saves the user settings from the registers to the EEPROM (Page 1).
0x16	RESTORE_USER_ALL	Send byte	0	N/A	Downloads the user settings from the EEPROM (Page 1) to the registers.
0x19	CAPABILITY	R	1	0x20	Allows the host system to determine the capabilities of the PMBus device.
0x20	VOUT_MODE	R	1	0x16	Sets/reads the formats for the VOUT related commands.
0x21	VOUT_COMMAND	R/W	2	0x0000	Sets the VOUT to the commanded value.
0x22	VOUT_TRIM	R/W	2	0x0000	Applies a fixed offset voltage to the output voltage command value.
0x23	VOUT_CAL_OFFSET	R/W	2	0x0000	Applies a fixed offset voltage to the output voltage command value.
0x24	VOUT_MAX	R/W	2	0x0000	Sets an upper limit on the output voltage.
0x25	VOUT_MARGIN_HIGH	R/W	2	0x0000	When the OPERATION command is set to margin high, Command 0x25 defines the voltage output setting.
0x26	VOUT_MARGIN_LOW	R/W	2	0x0000	When the OPERATION command is set to margin low, Command 0x26 defines the voltage output setting.
0x27	VOUT_TRANSITION_RATE	R/W	2	0x7BFF	Sets the rate at which the output changes voltage.
0x28	VOUT_DROOP	R/W	2	0x0000	Sets the rate at which the output voltage changes with the output current.
0x29	VOUT_SCALE_LOOP	R/W	2	0x0001	Establishes the scale factor for setting the output voltage, which is related to the resistor divider.
0x2A	VOUT_SCALE_MONITOR	R/W	2	0x0001	Establishes the scale factor for the READ_VOUT command, which typically can be the same as the VOUT_SCALE_LOOP command.
0x33	FREQUENCY_SWITCH	R/W	2	0x0031	Sets the switching frequency of the output voltage.
0x35	VIN_ON	R/W	2	0x0000	Sets the input voltage at which the unit starts the power conversion.
0x36	VIN_OFF	R/W	2	0x0000	Sets the input voltage at which the unit stops the power conversion.
0x38	IOUT_CAL_GAIN	R/W	2	0x0000	Establishes the scale factor for the READ_IOUT command.
0x40	VOUT_OV_FAULT_LIMIT	R/W	2	0x0000	Sets the limit for triggering the OV_FAULT flag.
0x41	VOUT_OV_FAULT_RESPONSE	R/W	1	0x00	Establishes the fault response for the OV_FAULT flag.
0x44	VOUT_UV_FAULT_LIMIT	R/W	2	0x0000	Sets the limit for triggering the VOUT_UV_FAULT flag.
0x45	VOUT_UV_FAULT_RESPONSE	R/W	1	0x00	Establishes the fault response for the VOUT_UV_FAULT flag.
0x46	IOUT_OC_FAULT_LIMIT	R/W	2	0x0000	Sets the limit for triggering the OC_FAULT flag.
0x47	IOUT_OC_FAULT_RESPONSE	R/W	1	0x00	Establishes the fault response for the OC_FAULT flag.
0x48	IOUT_OC_LV_FAULT_LIMIT	R/W	2	0x0000	Sets the voltage threshold in cases where the response to an overcurrent condition is to operate in a constant current mode unless the output voltage is pulled below the specified limit value.

Command Code	Command Name	PMBus/ SMBus Transaction Type[1]	Number of Data Bytes	Default Value[2]	Description
0x4F	OT_FAULT_LIMIT	R/W	2	0x0000	Sets the limit for triggering the OT_FAULT flag.
0x50	OT_FAULT_RESPONSE	R/W	1	0x00	Establishes the fault response for the OT_FAULT flag.
0x5E	POWER_GOOD_ON	R/W	2	0x0000	Sets the output voltage at which an optional POWER_GOOD signal is asserted.
0x5F	POWER_GOOD_OFF	R/W	2	0x0000	Sets the output voltage at which an optional POWER_GOOD signal is negated.
0x60	TON_DELAY	R/W	2	0x0000	Determines the time from when a start condition is received (as programmed by the ON_OFF_CONFIG command) until the output voltage starts to rise.
0x61	TON_RISE	R/W	2	0xC00D	Determines the time from when the output starts to rise until the voltage has entered the regulation band.
0x64	TOFF_DELAY	R/W	2	0x0000	Determines the time from when a stop condition is received (as programmed by the ON_OFF_CONFIG command) until the unit stops transferring energy to the output.
0x78	STATUS_BYTE	R	1	0x00	Returns the low byte of the STATUS_WORD command.
0x79	STATUS_WORD	R	2	0x0000	Returns the low byte and high byte of the STATUS_WORD command.
0x7A	STATUS_VOUT	R	1	0x00	Returns the fault flag for the output voltage.
0x7B	STATUS_IOUT	R	1	0x00	Returns the fault flag for the output current.
0x7C	STATUS_INPUT	R	1	0x00	Returns the fault flag for the input voltage and current.
0x7D	STATUS_TEMPERATURE	R	1	0x00	Returns the fault flag for the OT fault and warning.
0x7E	STATUS_CML	R	1	0x00	Returns the fault flag for the communication memory and logic.
0x88	READ_VIN	R	2	0x0000	Returns the input voltage value.
0x89	READ_IIN	R	2	0x0000	Returns the input current value.
0x8B	READ_VOUT	R	2	0x0000	Returns the output voltage value.
0x8C	READ_IOUT	R	2	0x0000	Returns the output current value.
0x8D	READ_TEMPERATURE	R	2	0x0000	Returns temperature reading in degrees Celsius.
0x94	READ_DUTY_CYCLE	R	2	0x0000	Returns the duty cycle of the power converter.
0x95	READ_FREQUENCY	R	2	0x0000	Returns the switching frequency of the power converter.
0x96	READ_POUT	R	2	0x0000	Returns the output power of the power converter.
0x98	READ_PMBUS_REVISION	R	1	0x22	Reads the PMBus revision to which the device is compliant.
0x99	MFR_ID	R/W	1	0x00	Reads/writes the ID of the manufacturer.
0x9A	MFR_MODEL	R/W	1	0x00	Reads/writes the model number of the manufacturer.
0x9B	MFR_REVISION	R/W	1	0x00	Reads/writes revision number of the manufacturer.
0xA4	MFR_VOUT_MIN	R/W	2	N/A	Returns the minimum output voltage of the power converter after achieving regulation.
0xA5	MFR_VOUT_MAX	R/W	2	N/A	Returns the maximum output voltage of the power converter after achieving regulation.
0xA6	MFR_IOUT_MAX	R/W	2	N/A	Returns the maximum output current of the power converter after achieving regulation.
0xA7	MFR_POUT_MAX	R/W	2	N/A	Returns the maximum output power of the power converter after achieving regulation.
0xAD	IC_DEVICE_ID	R	2	0x4152	Reads the IC device ID.
0xAE	IC_DEVICE_REV	R	1	0x31	Reads the IC device revision.
0xB0	EEPROM_DATA_00	R block	Variable	N/A	Block reads from Page 0. The EEPROM must first be unlocked.
0xB1	EEPROM_DATA_01	R block	Variable	N/A	Block reads from Page 1. The EEPROM must first be unlocked.
0xB2	EEPROM_DATA_02	R/W block	Variable	N/A	Block reads/writes to Page 2. The EEPROM must first be unlocked for writes.
0xB3	EEPROM_DATA_03	R/W block	Variable	N/A	Block reads/writes to Page 3. The EEPROM must first be unlocked for writes.

Command Code	Command Name	PMBus/ SMBus Transaction Type[1]	Number of Data Bytes	Default Value[2]	Description
0xB4	EEPROM_DATA_04	R/W block	Variable	N/A	Block reads/writes to Page 4. The EEPROM must first be unlocked for writes.
0xB5	EEPROM_DATA_05	R/W block	Variable	N/A	Block reads/writes to Page 5. The EEPROM must first be unlocked for writes.
0xB6	EEPROM_DATA_06	R/W block	Variable	N/A	Block reads/writes to Page 6. The EEPROM must first be unlocked for writes.
0xB7	EEPROM_DATA_07	R/W block	Variable	N/A	Block reads/writes to Page 7. The EEPROM must first be unlocked for writes.
0xB8	EEPROM_DATA_08	R/W block	Variable	N/A	Block reads/writes to Page 8. The EEPROM must first be unlocked for writes.
0xB9	EEPROM_DATA_09	R/W block	Variable	N/A	Block reads/writes to Page 9. The EEPROM must first be unlocked for writes.
0xBA	EEPROM_DATA_10	R/W block	Variable	N/A	Block reads/writes to Page 10. The EEPROM must first be unlocked for writes.
0xBB	EEPROM_DATA_11	R/W block	Variable	N/A	Block reads/writes to Page 11. The EEPROM must first be unlocked for writes.
0xBC	EEPROM_DATA_12	R/W block	Variable	N/A	Block reads/writes to Page 12. The EEPROM must first be unlocked for writes.
0xBD	EEPROM_DATA_13	R/W block	Variable	N/A	Block reads/writes to Page 13. The EEPROM must first be unlocked for writes.
0xBE	EEPROM_DATA_14	R/W block	Variable	N/A	Block reads/writes to Page 14. The EEPROM must first be unlocked for writes.
0xBF	EEPROM_DATA_15	R/W block	Variable	N/A	Block reads/writes to Page 15. The EEPROM must first be unlocked for writes.
0xC0	MFR_TEMPERATURE_MAX	R/W	2	N/A	Returns the maximum temperature of the power converter after achieving regulation.
0xD1	EEPROM_CRC_CHKSUM	R	1	N/A	Returns the CRC checksum value from the EEPROM download operation.
0xD2	EEPROM_NUM_RD_BYTES	R/W	1	N/A	Sets the number of return read bytes when using EEPROM_DATA_xx commands.
0xD3	EEPROM_ADDR_OFFSET	R/W	2	N/A	Sets the address offset of the current EEPROM page.
0xD4	EEPROM_PAGE_ERASE	W	1	N/A	Performs a page erase on a selected page (Page 3 to Page 15). Wait 35 ms for each page erase operation. The EEPROM must first be unlocked. A page erase of Page 0 and Page 1 is not allowed.
0xD5	EEPROM_PASSWORD	W	1	0xFF	Writes the password to this register to unlock the EEPROM, and/or changes the EEPROM password.
0xD6	TRIM_PASSWORD	W	1	0xFF	Writes the password to this register to unlock the trim registers for write access.
0xD7	CHIP_PASSWORD	W	2	0xFFFF	Writes the password to this register to unlock the chip password for register access.
0xD8	VIN_SCALE_MONITOR	R/W	2	0x0001	Establishes the scale factor for the input voltage reading (READ_VIN).
0xD9	IIN_SCALE_MONITOR	R/W	2	0x0001	Establishes the scale factor for the input current reading (READ_IIN).
0xF1	EEPROM_INFO	Read block	Variable	N/A	Reads the first fault information.
0xFA	MFR_SPECIFIC_1	R/W	1	0x00	Stores the user customized information. This register also stores the CS2 high-side mode factory analog trim value.
0xFB	MFR_SPECIFIC_2	R/W	1	0x00	Stores the user customized information test. This register also stores the CS2 high-side mode digital offset trim value.

[1] R means read, W means write, and R/W means read/write.
[2] N/A means not applicable.

EXTENDED COMMAND LIST: MANUFACTURER SPECIFIC

Table 13. Manufacturer Specific Extended Command List Overview

Address	Register Function
Flag Configuration Registers	
0xFE00	IIN_OC_FAST_FAULT_RESPONSE
0xFE01	CS3_OC_FAULT_RESPONSE, extended VOUT_OV_FAULT_RESPONSE
0xFE02	VIN_UV_FAULT_RESPONSE
0xFE03	FLAGIN_RESPONSE, SR_RC_FAULT_RESPONSE
0xFE05	Flag reenable delay, VDD_OV_RESPONSE
Soft Start Software Reset Setting Registers	
0xFE06	Software reset GO command
0xFE07	Software reset settings
0xFE08	Synchronous rectifier (SR) soft start settings
0xFE09	Soft start setting of open-loop operation
Blanking and $\overline{\text{PGOOD}}$ Setting Registers	
0xFE0B	Flag blanking during soft start
0xFE0C	Volt-second balance blanking and SR disable during soft start
0xFE0D	$\overline{\text{PGOOD}}$ mask settings
0xFE0E	$\overline{\text{PGOOD}}$ flag debounce
0xFE0F	Debounce time for asserting $\overline{\text{PGOOD}}$
Switching Frequency and Synchronization Setting Registers	
0xFE11	Synchronization delay time
0xFE12	Synchronization general settings
0xFE13	Dual-ended topology mode
Current Sense and Limit Setting Registers	
0xFE14	CS1 gain trim
0xFE15	CS2 gain trim
0xFE16	CS2 digital offset trim
0xFE17	CS2 analog trim
0xFE19	CS2 light load threshold
0xFE1A	IIN_OC_FAST_FAULT_LIMIT and SR_RC_FAULT_LIMIT
0xFE1B	CS2 deep light load mode setting
0xFE1C	PWM outputs disable at deep light load mode
0xFE1D	Matched cycle-by-cycle current-limit settings
0xFE1E	Light load mode and deep light mode settings
0xFE1F	CS1 cycle-by-cycle current-limit settings
Voltage Sense and Limit Setting Registers	
0xFE20	VS gain trim
0xFE25	Prebias start-up enable
0xFE26	VOUT_OV_FAULT flag debounce
0xFE28	VF gain trim
0xFE29	VIN_ON and VIN_OFF delay
Temperature Sense and Protection Setting Registers	
0xFE2A	RTD gain trim
0xFE2B	RTD offset trim (MSBs)
0xFE2C	RTD offset trim (LSBs)
0xFE2D	RTD current source settings
0xFE2F	OT hysteresis settings

Address	Register Function
Digital Compensator and Modulation Setting Registers	
0xFE30	Normal mode compensator low frequency gain settings
0xFE31	Normal mode compensator zero settings
0xFE32	Normal mode compensator pole settings
0xFE33	Normal mode compensator high frequency gain settings
0xFE34	Light load mode compensator low frequency gain settings
0xFE35	Light load mode compensator zero settings
0xFE36	Light load mode compensator pole settings
0xFE37	Light load mode compensator high frequency gain settings
0xFE38	CS1 threshold for volt-second balance
0xFE39	Nominal modulation value for prebias startup
0xFE3A	Constant current speed and SR driver delay
0xFE3B	PWM 180° phase shift settings
0xFE3C	Modulation limit
0xFE3D	Feedforward and soft start filter gain
PWM Outputs Timing Registers	
0xFE3E	OUTA rising edge timing
0xFE3F	OUTA falling edge timing
0xFE40	OUTA rising and falling edges timing (LSBs)
0xFE41	OUTB rising edge timing
0xFE42	OUTB falling edge timing
0xFE43	OUTB rising and falling edges timing (LSBs)
0xFE44	OUTC rising edge timing
0xFE45	OUTC falling edge timing
0xFE46	OUTC rising and falling edges timing (LSBs)
0xFE47	OUTD rising edge timing
0xFE48	OUTD falling edge timing
0xFE49	OUTD rising and falling edges timing (LSBs)
0xFE4A	SR1 rising edge timing
0xFE4B	SR1 falling edge timing
0xFE4C	SR1 rising and falling edges timing (LSBs)
0xFE4D	SR2 rising edge timing
0xFE4E	SR2 falling edge timing
0xFE4F	SR2 rising and falling edges timing (LSBs)
0xFE50	OUTA and OUTB modulation settings
0xFE51	OUTC and OUTD modulation settings
0xFE52	SR1 and SR2 modulation settings
0xFE53	PWM output disable
Volt-Second Balance Control Registers	
0xFE54	Volt-second balance control general settings
0xFE55	Volt-second balance control on OUTA and OUTB
0xFE56	Volt-second balance control on OUTC and OUTD
0xFE57	Volt-second balance control on SR1 and SR2
Duty Cycle Setting Registers	
0xFE58	Duty cycle reading settings
0xFE59	Input voltage compensation multiplier
Adaptive Dead Time Compensation Registers	
0xFE5A	Adaptive dead time compensation threshold
0xFE5B	OUTA dead time
0xFE5C	OUTB dead time
0xFE5D	OUTC dead time
0xFE5E	OUTD dead time

Address	Register Function
0xFE5F	SR1 dead time
0xFE60	SR2 dead time
Other Setting Registers	
0xFE61	GO commands
0xFE62	Customized register
0xFE63	Modulation reference MSBs setting for open-loop input voltage feedforward operation
0xFE64	Modulation reference LSBs setting for open-loop input voltage feedforward operation
0xFE65	Peak value and average value update rate settings
0xFE66	Adaptive dead time compensation configuration
0xFE67	Open-loop operation settings
0xFE68	Offset setting for SR1 and SR2
0xFE69	Pulse skipping mode threshold
0xFE6A	CS3_OC_FAULT_LIMIT
0xFE6B	Modulation threshold for OVP selection
0xFE6C	Modulation flag for OVP selection
0xFE6D	OUTA and OUTB adjustment reference during synchronization
0xFE6E	OUTC and OUTD adjustment reference during synchronization
0xFE6F	SR1 and SR2 adjustment reference during synchronization
Manufacturer Specific Fault Flag Registers	
0xFEA0	Flag Register 1
0xFEA1	Flag Register 2
0xFEA2	Flag Register 3
0xFEA3	Latched Flag Register 1
0xFEA4	Latched Flag Register 2
0xFEA5	Latched Flag Register 3
0xFEA6	First flag ID
Manufacturer Specific Value Reading Registers	
0xFEA7	CS1 value
0xFEA8	CS2 value
0xFEA9	CS3 value
0xFEAA	VS value
0xFEAB	RTD value
0xFEAC	VF value
0xFEAD	Duty cycle value
0xFEAE	Input power value
0xFEAF	Output power value

PMBus COMMAND DESCRIPTIONS

Note that in the PMBus Command Descriptions section, N/A means not applicable.

BASIC PMBus COMMANDS

OPERATION

The OPERATION command turns the unit on and off in conjunction with the input from the CTRL pin. It also sets the output voltage to the upper or lower voltage margin. The unit stays in the commanded operating mode until a subsequent OPERATION command instructs the device to change to another mode.

Table 14. Register 0x01—OPERATION

Bits	Bit Name/Function	R/W	Description		
[7:6]	Enable	R/W	These bits determine the response to the OPERATION command.		
			Bit 7	**Bit 6**	**Description**
			0	0	Immediate off (no sequencing)
			0	1	Soft off (power-down based on the programmed TOFF_DELAY command)
			1	0	Unit on
			1	1	Reserved
[5:4]	Margin control	R/W	These bits set the voltage margin level.		
			Bit 5	**Bit 4**	**Description**
			0	0	Off
			0	1	Margin low
			1	0	Margin high
			1	1	Reserved
[3:0]	Reserved	R	Reserved.		

ON_OFF_CONFIG

The ON_OFF_CONFIG command configures the combination of CTRL pin input and serial bus commands needed to turn the unit on and off, including how the unit responds when power is applied.

Table 15. Register 0x02—ON_OFF_CONFIG

Bits	Bit Name/Function	R/W	Description
[7:5]	Reserved	R	Reserved.
4	Power-up control	R/W	Controls how the device responds to the OPERATION command. 0 = the unit powers up whenever power is present. 1 = the unit powers up only when commanded by the CTRL pin and the OPERATION command (as programmed in Register 0x02, Bits[3:0]).
3	Command enable	R/W	Controls how the device responds to the OPERATION command. 0 = ignores the OPERATION command. 1 = requires that the OPERATION command be set to the on state to enable the unit (in addition to the setting of Bit 2).
2	Pin enable	R/W	Controls how the device responds to the value on the CTRL pin. 0 = ignores the CTRL pin. 1 = requires the CTRL pin to be asserted to enable the unit (in addition to the setting of Bit 3).
1	CTRL pin polarity	R/W	Sets the polarity for the CTRL pin. 0 = active low. 1 = active high.
0	Power-down delay	R/W	Action to take at power-down. 0 = uses the TOFF_DELAY value (TOFF_FALL is not supported by the ADP1052) to stop the transfer of energy to the output. 1 = turns off the output and stops energy transfer to the output as fast as possible.

CLEAR_FAULTS

CLEAR_FAULTS is a send byte, no data command. This command clears all PMBus fault bits in all PMBus status registers simultaneously.

Table 16. Register 0x03—CLEAR_FAULTS

Bits	Bit Name/Function	Type	Description
N/A	CLEAR_FAULTS	Send	Clears all bits in PMBus status registers (Register 0x78 to Register 0x7E) simultaneously.

WRITE_PROTECT

The WRITE_PROTECT command controls writing to the PMBus device. This command provides protection against accidental changes; this command does not provide protection against deliberate or malicious changes to the configuration or operation of the device.

Table 17. Register 0x10—WRITE_PROTECT

Bits	Bit Name/Function	R/W	Description
7	Write Protect 1	R/W	Disables writes to all commands except the WRITE_PROTECT command.
6	Write Protect 2	R/W	Disables writes to all commands except the WRITE_PROTECT and OPERATION commands.
5	Write Protect 3	R/W	Disables writes to all commands except the WRITE_PROTECT, OPERATION, ON_OFF_CONFIG, and VOUT_COMMAND commands.
[4:0]	Reserved	R	Reserved.

RESTORE_DEFAULT_ALL

RESTORE_DEFAULT_ALL is a send byte, no data command. This command downloads the factory default settings (including the basic PMBus commands, the manufacturer specific extended commands (starting with 0xFE), and other data, such as the checksum, the EEPROM password, and the chip password) from the EEPROM (Page 0 of the main block) into the registers.

Table 18. Register 0x12—RESTORE_DEFAULT_ALL

Bits	Bit Name/Function	Type	Description
N/A	RESTORE_DEFAULT_ALL	Send	Restores the factory default settings from the EEPROM to the registers.

STORE_USER_ALL

STORE_USER_ALL is a send byte, no data command. This command copies the entire contents of the registers into the EEPROM (Page 1 of the main block) as the user settings. The settings are automatically restored on the power-up of VDD.

Table 19. Register 0x15—STORE_USER_ALL

Bits	Bit Name/Function	Type	Description
N/A	STORE_USER_ALL	Send	Saves the user settings from the registers to the EEPROM.

RESTORE_USER_ALL

RESTORE_USER_ALL is a send byte, no data command. This command downloads the stored user settings, including the basic PMBus commands, the manufacturer specific extended commands (starting with 0xFE), and other data (for example, the checksum, the EEPROM password, and the chip password) from the EEPROM (Page 1 of the main block) into the registers.

Table 20. Register 0x16—RESTORE_USER_ALL

Bits	Bit Name/Function	Type	Description
N/A	RESTORE_USER_ALL	Send	Restores the user settings from the EEPROM to the registers.

CAPABILITY

The CAPABILITY command summarizes the PMBus optional communication protocols supported by the ADP1052. The reading of this command results in 0x20.

Table 21. Register 0x19—CAPABILITY

Bits	Bit Name/Function	R/W	Description
7	Packet error	R	Checks the packet error capability of the device. 0 = not supported.
[6:5]	Maximum bus speed	R	Checks the PMBus speed capability of the device. 01 = maximum bus speed of 400 kHz.

Bits	Bit Name/Function	R/W	Description
4	$\overline{\text{SMBALERT}}$	R	Checks support of the $\overline{\text{SMBALERT}}$ pin and the SMBus alert response protocol. 0 = not supported.
[3:0]	Reserved	R	Reserved.

VOUT_MODE

The VOUT_MODE command sets the data format for output voltage related data. The data byte for the VOUT_MODE command consists of a 3-bit mode and 5-bit exponent parameter. The 3-bit mode determines whether the device uses linear format or direct format for the output voltage related commands. The 5-bit parameter sets the exponent value for linear format.

Table 22. Register 0x20—VOUT_MODE

Bits	Bit Name/Function	R/W	Description
[7:5]	Mode	R	Output voltage data format. The value is fixed at 000, which means that only linear format is supported.
[4:0]	Exponent	R	The N value for the output voltage related commands in linear format: $V = Y \times 2^N$. The value is fixed at 10110 (twos complement, −10 decimal). The exponent for the linear format values is −10.

VOUT_COMMAND

The VOUT_COMMAND command sets the output voltage. Use the VOUT_TRANSITION_RATE command if VOUT_COMMAND is modified while the output is active and in a steady state condition. The maximum programmable output voltage is 64 V.

Table 23. Register 0x21—VOUT_COMMAND

Bits	Bit Name/Function	R/W	Description
[15:0]	Mantissa	R/W	Sets the output voltage reference value, in volts. 16-bit, unsigned Integer Y value for linear format: $V = Y \times 2^N$. N is defined in the VOUT_MODE command.

VOUT_TRIM

The VOUT_TRIM command applies a fixed offset voltage to the output voltage command value. It is typically set by the user to trim the output voltage at the time that the PMBus device is assembled into the system of the user. The trim range is −32 V to +32 V, and each LSB resolution is 2^{-10} = 0.9765625 mV.

Table 24. Register 0x22—VOUT_TRIM

Bits	Bit Name/Function	R/W	Description
[15:0]	Mantissa	R/W	Sets the output voltage trim value. 16-bit, twos complement, Y value for linear format: $V = Y \times 2^N$. N is defined in the VOUT_MODE command.

VOUT_CAL_OFFSET

The VOUT_CAL_OFFSET command applies a fixed offset voltage to the output voltage command value. It is typically used by the PMBus device manufacturer to calibrate the device in the factory. The trim range is −32 V to +32 V and each LSB size is 2^{-10} = 0.9765625 mV.

Table 25. Register 0x23—VOUT_CAL_OFFSET

Bits	Bit Name/Function	R/W	Description
[15:0]	Mantissa	R/W	Sets the output voltage trim value. 16-bit, twos complement, Y value for linear format: $V = Y \times 2^N$. N is defined in the VOUT_MODE command.

VOUT_MAX

The VOUT_MAX command sets an upper limit on the output voltage that the device can attain, regardless of any other commands or combinations. If an attempt is made to program the output voltage higher than the limit set by this command, the device responds as follows:

- The commanded output voltage is set to the VOUT_MAX value.
- The "none of the above" bit is set in the STATUS_BYTE command (Register 0x78[0]).
- The VOUT bit is set in the STATUS_WORD command (Register 0x79[15]).
- The VOUT_MAX warning bit is set in the STATUS_VOUT command (Register 0x7A[3]).

Table 26. Register 0x24—VOUT_MAX

Bits	Bit Name/Function	R/W	Description
[15:0]	Mantissa	R/W	Sets the output voltage upper limit. 16-bit, unsigned Integer Y value for linear format: $V = Y \times 2^N$. N is defined in the VOUT_MODE command.

VOUT_MARGIN_HIGH

The VOUT_MARGIN_HIGH command sets the target voltage to which the output changes when the OPERATION command is set to margin high. Use the VOUT_TRANSITION_RATE command if the VOUT_MARGIN_HIGH command is modified while the output is active and in a steady-state condition.

Table 27. Register 0x25—VOUT_MARGIN_HIGH

Bits	Bit Name/Function	R/W	Description
[15:0]	Mantissa	R/W	Sets the margin high value for the output voltage, in volts. 16-bit, unsigned integer Y value for linear format: $V = Y \times 2^N$. N is defined by the VOUT_MODE command.

VOUT_MARGIN_LOW

The VOUT_MARGIN_LOW command sets the target voltage to which the output changes when the OPERATION command is set to margin low. Use the VOUT_TRANSITION_RATE command if the VOUT_MARGIN_LOW command is modified while the output is active and in a steady-state condition.

Table 28. Register 0x26—VOUT_MARGIN_LOW

Bits	Bit Name/Function	R/W	Description
[15:0]	Mantissa	R/W	Sets the margin low value for the output voltage, in volts. 16-bit, unsigned Integer Y value for linear format $V = Y \times 2^N$. N is defined by the VOUT_MODE command.

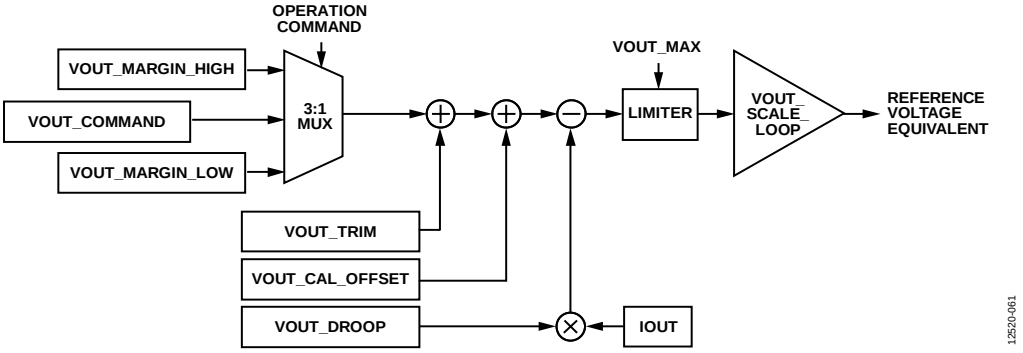

Figure 62. Conceptual View of the Output Voltage Related Commands

VOUT_TRANSITION_RATE

When the device receives either a VOUT_COMMAND command or an OPERATION command (margin high, margin low) that causes the output voltage to change, the VOUT_TRANSITION_RATE command sets the rate, in mV/µs, at which the VS± pins change voltage. This commanded rate of change does not apply when the unit is turned on or off. The maximum positive value (0x7BFF) of the two data bytes indicates that the unit makes the transition as quickly as possible. Only the following limited options are supported by the ADP1052.

Table 29. Register 0x27—VOUT_TRANSITION_RATE (Rate-of-Change Options Supported by the ADP1052)

Register Setting	Rate of Change (mV/µs)
1001100000001101 (0x980D)	0.0015625
1010000000001101 (0xA00D)	0.003125
1010100000001101 (0xA80D)	0.00625
1011000000001101 (0xB00D)	0.0125
1011100000001101 (0xB80D)	0.025
1100000000001101 (0xC00D)	0.050
1100100000001101 (0xC80D)	0.1
1101000000001101 (0xD00D)	0.2
0111101111111111 (0x7BFF)	Infinite (default)

Table 30. Register 0x27—VOUT_TRANSITION_RATE

Bits	Bit Name/Function	R/W	Description
[15:11]	Exponent	R/W	5-bit, twos complement, N value for linear format, $X = Y \times 2^N$.
[10:0]	Mantissa	R/W	11-bit, twos complement, Y value for linear format, $X = Y \times 2^N$.

VOUT_DROOP

The VOUT_DROOP command sets the rate, in mV/A (mΩ), at which the output voltage decreases (or increases) with increasing (or decreasing) output current for use with the adaptive voltage positioning requirements and passive current sharing schemes. The range of VOUT_DROOP in the ADP1052 is 0x0000 to 0x00FF (0 mΩ to 255 mΩ). Values not within this range are invalid. An invalid value results in a CML error.

Table 31. Register 0x28—VOUT_DROOP

Bits	Bit Name/Function	R/W	Description
[15:11]	Exponent	R	5-bit, twos complement, N value for linear format, $X = Y \times 2^N$. N is fixed at 0.
[10:8]	Mantissa high bits	R	Mantissa high bits, Y[10:8], value fixed at 0.
[7:0]	Mantissa low bits	R/W	Mantissa low bits, Y[7:0], value for linear format, $X = Y \times 2^N$.

VOUT_SCALE_LOOP

The VOUT_SCALE_LOOP command is equal to the feedback resistor ratio. The nominal output voltage is set by a resistor divider and the internal 1 V reference voltage. For example, if the nominal output voltage is 12 V, the VOUT_SCALE_LOOP value = 1 V/12 V = 0.08333 and the VOUT_SCALE_LOOP can be set as 0xA155.

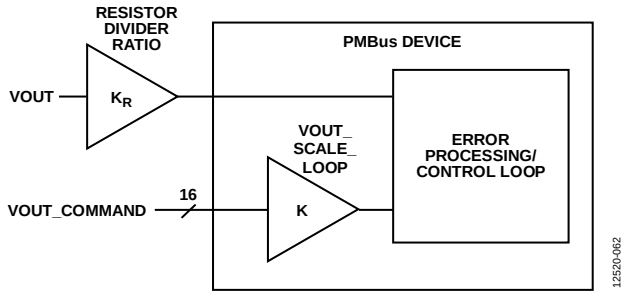

Figure 63. Conceptual View of the VOUT_SCALE_LOOP Command

Table 32. Register 0x29—VOUT_SCALE_LOOP

Bits	Bit Name/Function	R/W	Description
[15:11]	Exponent	R/W	5-bit, twos complement, N value for linear format, $K_R = Y \times 2^N$, where N is in the range of −12 to 0 decimal.
[10:0]	Mantissa	R/W	11-bit, twos complement, Y value for linear format, $K_R = Y \times 2^N$.

VOUT_SCALE_MONITOR

This command is typically the same as the VOUT_SCALE_LOOP command. Use VOUT_SCALE_MONITOR for reading the output voltage with the READ_VOUT command (Register 0x8B).

Table 33. Register 0x2A—VOUT_SCALE_MONITOR

Bits	Bit Name/Function	R/W	Description
[15:11]	Exponent	R/W	5-bit, twos complement, N value for linear format, $K_R = Y \times 2^N$, where N is in the range of −12 to 0 decimal.
[10:0]	Mantissa	R/W	11-bit, twos complement, Y value for linear format, $K_R = Y \times 2^N$.

FREQUENCY_SWITCH

The FREQUENCY_SWITCH command, which sets the switching frequency in kHz, is in linear format. Only the following limited switching frequency options are supported by the ADP1052. In the ADP1052, because the switching frequency is calculated from the switching period, the switching period value that is used is an accurate measure, whereas the switching frequency may not be. For example, for the first switching frequency option of 49 kHz (see Table 34) the actual switching frequency is calculated by 1/(20.48 µs) = 48.828125 kHz, which is simplified (rounded) to 49 kHz.

To avoid an incorrect switching frequency setting, the GO commands in Register 0xFE61[2:1] must be used to latch this setting and the PWM setting.

Table 34. Register 0x33—FREQUENCY_SWITCH (Options Supported by the ADP1052)

Register Setting	Switching Frequency (kHz)	Accurate Switching Period (µs)
0000000000110001 (0x0031)	49	20.48
0000000000111000 (0x0038)	56	17.92
0000000000111100 (0x003C)	60	16.64
0000000001000001 (0x0041)	65	15.36
0000000001000111 (0x0047)	71	14.08
0000000001001110 (0x004E)	78	12.80
0000000001010111 (0x0057)	87	11.52
1111100011000011 (0xF8C3)	97.5	10.24
0000000001101000 (0x0068)	104	9.60
1111100011011111 (0xF8DF)	111.5	8.96
0000000001111000 (0x0078)	120	8.32
0000000010000010 (0x0082)	130	7.68
0000000010001000 (0x0088)	136	7.36
0000000010001110 (0x008E)	142	7.04
0000000010010101 (0x0095)	149	6.72
1111100100111001 (0xF939)	156.5	6.40
1111100101001001 (0xF949)	164.5	6.08
1111100101011011 (0xF95B)	173.5	5.76
0000000010111000 (0x00B8)	184	5.44
1111100110000111 (0xF987)	195.5	5.12
1111100110010011 (0xF993)	201.5	4.96
1111100110100001 (0xF9A1)	208.5	4.80
1111100110101111 (0xF9AF)	215.5	4.64
0000000011011111 (0xDF)	223	4.48
1111100111001111 (0xF9CF)	231.5	4.32
1111100111100001 (0xF9E1)	240.5	4.16
0000000011111010 (0x00FA)	250	4.00
1111101000001001 (0xFA09)	260.5	3.84
1111101000011111 (0xFA1F)	271.5	3.68
0000000100011100 (0x011C)	284	3.52
1111101001010011 (0xFA53)	297.5	3.36
1111101001110001 (0xFA71)	312.5	3.20
1111101010000001 (0xFA81)	320.5	3.12
0000000101001001 (0x0149)	329	3.04
0000000101010010 (0x0152)	338	2.96
0000000101011011 (0x15B)	347	2.88
0000000101100101 (0x0165)	357	2.80
1111101011011111 (0xFADF)	367.5	2.72
0000000101111011 (0x017B)	379	2.64
1111101100001101 (0xFB0D)	390.5	2.56
0000000110001101 (0x018D)	397	2.52
0000000110010011 (0x0193)	403	2.48
0000000110011010 (0x019A)	410	2.44
1111101101000001 (0xFB41)	416.5	2.40
1111101101001111 (0xFB4F)	423.5	2.36
0000000110101111 (0x1AF)	431	2.32
1111101101101101 (0xFB6D)	438.5	2.28
1111101101111101 (0xFB7D)	446.5	2.24
1111101110001101 (0xFB8D)	454.5	2.20
0000000111001111 (0x01CF)	463	2.16
0000000111011000 (0x01D8)	472	2.12
0000000111100001 (0x01E1)	481	2.08

Register Setting	Switching Frequency (kHz)	Accurate Switching Period (µs)
0000000111101010 (0x1EA)	490	2.04
0000000111110100 (0x1F4)	500	2.00
0000000111111110 (0x01FE)	510	1.96
0000001000001000 (0x0208)	520	1.92
0000001000010011 (0x0213)	531	1.88
0000001000011111 (0x0x21F)	543	1.84
0000001000101100 (0x022C)	556	1.80
0000001000111000 (0x0238)	568	1.76
0000001001000101 (0x0245)	581	1.72
0000001001010011 (0x0253)	595	1.68
0000001001100010 (0x0262)	610	1.64
0000001001110001 (0x0271)	625	1.60

Table 35. Register 0x33—FREQUENCY_SWITCH

Bits	Bit Name/Function	R/W	Description
[15:11]	Exponent	R/W	5-bit, twos complement, N value for linear format, $X = Y \times 2^N$.
[10:0]	Mantissa	R/W	11-bit, twos complement, Y value for linear format, $X = Y \times 2^N$.

VIN_ON

The VIN_ON command sets the value of the input voltage (in volts) at which the unit begins a power conversion.

Table 36. Register 0x35—VIN_ON

Bit	Bit Name/Function	R/W	Description
[15:11]	Exponent	R/W	5-bit, twos complement, N value for linear format, $X = Y \times 2^N$, where N is in the range of −12 to 0 decimal.
[10:0]	Mantissa	R/W	11-bit, twos complement, Y value for linear format, $X = Y \times 2^N$.

VIN_OFF

The VIN_OFF command sets the value of the input voltage (in volts) at which the unit stops power conversion after operation has started.

Table 37. Register 0x36—VIN_OFF

Bit	Bit Name/Function	R/W	Description
[15:11]	Exponent	R/W	5-bit, twos complement, N value for linear format, $X = Y \times 2^N$, where N is in the range of −12 to 0 decimal.
[10:0]	Mantissa	R/W	11-bit, twos complement, Y value for linear format, $X = Y \times 2^N$.

IOUT_CAL_GAIN

The IOUT_CAL_GAIN command sets the ratio of the voltage at the current sense element to the sensed current. For devices using a fixed current sense resistor, it is typically the same value as the conductance of the resistor. The units are milliohms (mΩ). Typically, this command is used with the READ_IOUT command.

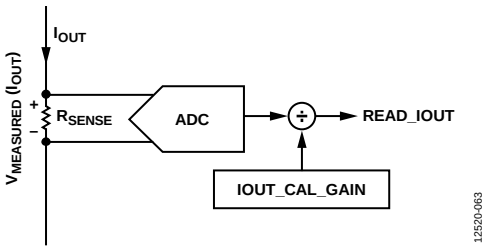

Figure 64. Conceptual View of the Output Current Related Commands

Table 38. Register 0x38—IOUT_CAL_GAIN

Bits	Bit Name/Function	R/W	Description
[15:11]	Exponent	R/W	5-bit, twos complement, N value for linear format, $X = Y \times 2^N$, where N is in the range of −12 to 0 decimal.
[10:0]	Mantissa	R/W	11-bit, twos complement, Y value for linear format, $X = Y \times 2^N$.

VOUT_OV_FAULT_LIMIT

The VOUT_OV_FAULT_LIMIT command sets the threshold value for overvoltage protection of the output voltage.

Table 39. Register 0x40—VOUT_OV_FAULT_LIMIT

Bits	Bit Name/Function	R/W	Description
[15:0]	Mantissa	R/W	16-bit, unsigned Integer Y value for linear mode format $X = Y \times 2^N$, where N is defined by the VOUT_MODE command. Note that the available OV protection limit value must be in the range of 75% to 150% of the nominal output voltage.

VOUT_OV_FAULT_RESPONSE

Table 40. Register 0x41—VOUT_OV_FAULT_RESPONSE

Bits	Bit Name/Function	R/W	Description			
[7:6]	Response	R/W	00 = continues operation without interruption. 01 = continues operation for the debounce time (Delay Time 1) specified by Register 0xFE26[7:6]. If the fault persists, retry the number of times specified by the retry setting of this command (Bits[5:3]). 10 = shuts down and responds according to the retry setting in Bits[5:3]. 11 = the output is disabled while the fault is present. Operation resumes and the output is enabled when the fault condition no longer exists.			
[5:3]	Retry setting	R/W	000 = restart not attempted. The output remains disabled until the fault is cleared. 001 to 110 = attempts to restart the number of times set by these bits. If the ADP1052 fails to restart in the allowed number of retries, the output is disabled and remains off until the fault is cleared. The time between the start of each attempt to restart is set by the Delay Time 2 value in Bits[2:0], together with the delay time unit specified for that particular fault. 111 = attempts to restart continuously, without limitation, until it is commanded off (by the CTRL pin, the OPERATION command, or both), V_{DD} is removed, or another fault condition causes the device to shut down.			
[2:0]	Delay time	R/W	These bits set the delay time between the start of each attempt to restart.			
			Bit 2	**Bit 1**	**Bit 0**	**Delay Time 2 (ms)**
			0	0	0	252
			0	0	1	588
			0	1	0	924
			0	1	1	1260
			1	0	0	1596
			1	0	1	1932
			1	1	0	2268
			1	1	1	2604

VOUT_UV_FAULT_LIMIT

The VOUT_UV_FAULT_LIMIT command sets the threshold value for undervoltage protection of the output voltage.

Table 41. Register 0x44—VOUT_UV_FAULT_LIMIT

Bits	Bit Name/Function	R/W	Description
[15:0]	Mantissa	R/W	16-bit, unsigned integer Y value for linear format $X = Y \times 2^N$. N is defined by the VOUT_MODE command.

VOUT_UV_FAULT_RESPONSE

Table 42. Register 0x45—VOUT_UV_FAULT_RESPONSE

Bits	Bit Name/Function	R/W	Description
[7:6]	Response	R/W	00 = continues operation without interruption. 01 = continues operation for the Delay Time 1 (Bits[2:0]). If the fault persists, retry the number of times specified by the retry setting (Bits[5:3]). 10 = shuts down (disables the output) and responds according to the retry setting in Bits[5:3]. 11 = the output is disabled while the fault is present. Operation resumes and the output is enabled when the fault condition no longer exists.
[5:3]	Retry setting	R/W	000 = restart not attempted. The output remains disabled until the fault is cleared. 001 to 110 = attempts to restart the number of times set by these bits. If the unit fails to restart in the allowed number of retries, it disables the output and remains off until the fault is cleared. The time between the start of each attempt to restart is set by the Delay Time 2 value in Bits[2:0], together with the delay time unit specified for that particular fault. 111 = attempts to restart continuously, without limitation, until it is commanded off (by the CTRL pin or the OPERATION command, or both), V_{DD} is removed, or another fault condition causes the unit to shut down.
[2:0]	Delay time	R/W	These bits set the delay time for the VOUT_UV_FAULT_RESPONSE Delay Time 1 and Delay Time 2 as described in Bits[7:6] and Bits[5:3].

Bit 2	Bit 1	Bit 0	Delay Time 1 (ms)	Delay Time 2 (ms)
0	0	0	0	252
0	0	1	20	588
0	1	0	40	924
0	1	1	80	1260
1	0	0	160	1596
1	0	1	320	1932
1	1	0	640	2268
1	1	1	1280	2604

IOUT_OC_FAULT_LIMIT

The IOUT_OC_FAULT_LIMIT command sets the threshold value for overcurrent protection of the output voltage.

Table 43. Register 0x46—IOUT_OC_FAULT_LIMIT

Bit	Bit Name/Function	R/W	Description
[15:11]	Exponent	R/W	5-bit, twos complement, N value for linear format $X = Y \times 2^N$. N should be in the range of −12 to 0 decimal.
[10:0]	Mantissa	R/W	11-bit, twos complement, Y value for linear format $X = Y \times 2^N$.

IOUT_OC_FAULT_RESPONSE

Table 44. Register 0x47—IOUT_OC_FAULT_RESPONSE

Bit	Bit Name/Function	R/W	Description
[7:6]	Response	R/W	00 = operates in current-limit mode, maintaining the output current at the IOUT_OC_FAULT_LIMIT, regardless of the output voltage (known as the constant current). 01 = operates in current-limit mode, maintaining the output current at the IOUT_OC_FAULT_LIMIT for as long as the output voltage remains above the IOUT_OC_LV_FAULT_LIMIT. If the output voltage is pulled down to less than that value, the ADP1052 shuts down and responds according to the retry setting in Bits[5:3]. 10 = continues operation in current-limit mode for the Delay Time 1 set by Bits[2:0], regardless of the output voltage. If the ADP1052 is still operating in current limit at the end of the delay time, it responds as programmed by the retry setting in Bits[5:3]. 11 = shuts down and responds as programmed by the retry setting in Bits[5:3].
[5:3]	Retry setting	R/W	000 = restart not attempted. The output remains disabled until the fault is cleared. 001 to 110 = attempts to restart the number of times set by these bits. If the ADP1052 fails to restart (the fault condition is no longer present and the ADP1052 is delivering power to the output and operating as programmed) in the allowed number of retries, it disables the output and remains off until the fault is cleared. The time between the start of each attempt to restart is set by the Delay Time 2 value in Bits[2:0], together with the delay time unit specified for that particular fault. 111 = attempts to restart continuously, without limitation, until it is commanded off (by the CTRL pin or the OPERATION command, or both), bias power is removed, or another fault condition causes the unit to shut down.
[2:0]	Delay time	R/W	These bits set the delay time.

Bit 2	Bit 1	Bit 0	Delay Time 1 (ms)	Delay Time 2 (ms)
0	0	0	0	252
0	0	1	20	588
0	1	0	40	924
0	1	1	80	1260
1	0	0	160	1596
1	0	1	320	1932
1	1	0	640	2268
1	1	1	1280	2604

IOUT_OC_LV_FAULT_LIMIT

The IOUT_OC_LV_FAULT_LIMIT command sets the voltage threshold in cases for which the response to an overcurrent condition is to operate in a constant current mode unless the output voltage is pulled below the specified limit value.

Table 45. Register 0x48—IOUT_OC_LV_FAULT_LIMIT

Bits	Bit Name/Function	R/W	Description
[15:0]	Mantissa	R/W	16-bit, unsigned integer Y value for linear format $X = Y \times 2^N$. N is defined in the VOUT_MODE command.

OT_FAULT_LIMIT

The OT_FAULT_LIMIT command sets the threshold value (in °C) for overtemperature protection. The range is 0°C to 156°C. If the setting value is out of range, the limit is 156 and the return value is 156.

Table 46. Register 0x4F—OT_FAULT_LIMIT

Bits	Bit Name/Function	R/W	Description
[15:11]	Exponent	R	5-bit, twos complement, N value for linear format $X = Y \times 2^N$. N is fixed at 0.
[10:8]	Mantissa high bits	R	Mantissa high bits Y[10:8] value fixed at 0.
[7:0]	Mantissa low bits	R/W	Mantissa low bits Y[7:0] value for linear format $X = Y \times 2^N$.

OT_FAULT_RESPONSE

Table 47. Register 0x50—OT_FAULT_RESPONSE

<table>
<tr><th>Bits</th><th>Bit Name/Function</th><th>R/W</th><th colspan="5">Description</th></tr>
<tr><td>[7:6]</td><td>Response</td><td>R/W</td><td colspan="5">00 = continues operation without interruption.
01 = continues operation for the Delay Time 1 specified by Bits[2:0] and the delay time unit specified for that particular fault. If the fault condition is still present at the end of the delay time, the unit responds as programmed in the retry setting (Bits[5:3]).
10 = shuts down (disables the output) and responds according to the retry setting in Bits[5:3].
11 = the output is disabled while the fault is present. Operation resumes and the output is enabled when the fault condition no longer exists.</td></tr>
<tr><td>[5:3]</td><td>Retry setting</td><td>R/W</td><td colspan="5">000 = restart not attempted. The output remains disabled until the fault is cleared.
001 to 110 = attempts to restart the number of times set by these bits. If the device fails to restart in the allowed number of retries, it disables the output and remains off until the fault is cleared. The time between the start of each attempt to restart is set by the Delay Time 2 value in Bits[2:0], together with the delay time unit specified for that particular fault.
111 = attempts to restart continuously, without limitation, until commanded off (by the CTRL pin or the OPERATION command, or both), V_{DD} is removed, or another fault condition causes the unit to shut down.</td></tr>
<tr><td rowspan="9">[2:0]</td><td rowspan="9">Delay time</td><td rowspan="9">R/W</td><td colspan="5">These bits set the delay time.</td></tr>
<tr><td>Bit 2</td><td>Bit 1</td><td>Bit 0</td><td>Delay Time 1 (sec)</td><td>Delay Time 2 (ms)</td></tr>
<tr><td>0</td><td>0</td><td>0</td><td>1</td><td>252</td></tr>
<tr><td>0</td><td>0</td><td>1</td><td>1</td><td>588</td></tr>
<tr><td>0</td><td>1</td><td>0</td><td>1</td><td>924</td></tr>
<tr><td>0</td><td>1</td><td>1</td><td>1</td><td>1260</td></tr>
<tr><td>1</td><td>0</td><td>0</td><td>1</td><td>1596</td></tr>
<tr><td>1</td><td>0</td><td>1</td><td>1</td><td>1932</td></tr>
<tr><td>1</td><td>1</td><td>0</td><td>1</td><td>2268</td></tr>
<tr><td>1</td><td>1</td><td>1</td><td>1</td><td>2604</td></tr>
</table>

POWER_GOOD_ON

The POWER_GOOD_ON command sets the output voltage (in volts) at which the POWER_GOOD signal asserts. The POWER_GOOD status bit (POWER_GOOD) in the STATUS_WORD command is always reflective of V_{OUT} with regard to the POWER_GOOD_ON and POWER_GOOD_OFF limits.

Table 48. Register 0x5E—POWER_GOOD_ON

Bits	Bit Name/Function	R/W	Description
[15:0]	Mantissa	R/W	Sets the output voltage for the POWER_GOOD_ON command. 16-bit, unsigned Integer Y value for linear format $X = Y \times 2^N$. N is defined by the VOUT_MODE command.

POWER_GOOD_OFF

The POWER_GOOD_OFF command sets the output voltage (in volts) at which the POWER_GOOD signal is negated. The POWER_GOOD status bit (POWER_GOOD) in the STATUS_WORD command is always reflective of V_{OUT} with regard to the POWER_GOOD_ON and POWER_GOOD_OFF limits.

Table 49. Register 0x5F—POWER_GOOD_OFF

Bits	Bit Name/Function	R/W	Description
[15:0]	Mantissa	R/W	Sets the output voltage for the POWER_GOOD_OFF command. 16-bit, unsigned Integer Y value for linear format $X = Y \times 2^N$. N is defined by the VOUT_MODE command.

TON_DELAY

The TON_DELAY command sets the turn-on delay time in milliseconds (ms).The ADP1052 supports only those options listed in Table 50.

Table 50. Register 0x60—TON_DELAY (Turn-On Delay Options Supported in the ADP1052)

Register Setting	Turn-On Delay Time (ms)
0000000000000000 (0x0000)	0
0000000000001010 (0x000A)	10
0000000000011001 (0x0019)	25
0000000000110010 (0x0032)	50
0000000001001011 (0x004B)	75
0000000001100100 (0x0064)	100
0000000011111010 (0x00FA)	250
0000001111101000 (0x03E8)	1000

Table 51. Register 0x60—TON_DELAY

Bits	Bit Name/Function	R/W	Description
[15:11]	Exponent	R/W	5-bit, twos complement, N value for linear format, $X = Y \times 2^N$.
[10:0]	Mantissa	R/W	11-bit, twos complement, Y value for linear format, $X = Y \times 2^N$.

TON_RISE

The TON_RISE command sets the turn-on rise time in ms. Only the values listed in Table 52 are supported in the ADP1052.

Table 52. Register 0x61—TON_RISE (Turn-On Rise Time Options Supported in the ADP1052)

Register Setting	Turn-On Rise Time (ms)
1100000000001101 (0xC00D)	0.05
1101000000001101 (0xD00D)	0.2
1111000000000111 (0xF007)	1.75
1111100000010101 (0xF815)	10.5
0000000000010101 (0x0015)	21
1111000010100001 (0xF0A1)	40.25
0000000000111100 (0x003C)	60
0000000001100100 (0x0064)	100

Table 53. Register 0x61—TON_RISE

Bits	Bit Name/Function	R/W	Description
[15:11]	Exponent	R/W	5-bit, twos complement N value for linear format, $X = Y \times 2^N$.
[10:0]	Mantissa	R/W	11-bit, twos complement Y value for linear format, $X = Y \times 2^N$.

TOFF_DELAY

The TOFF_DELAY command sets the turn-off delay time in milliseconds (ms). The ADP1052 supports only those values listed in Table 54.

Table 54. Register 0x64—TOFF_DELAY (Turn-Off Delay Options Supported in the ADP1052)

Register Setting	Turn-Off Delay Time (ms)
0000000000000000 (0x0000)	0
0000000000110010 (0x0032)	50
0000000011111010 (0x00FA)	250
0000001111101000 (0x03E8)	1000

Table 55. Register 0x64—TOFF_DELAY

Bits	Bit Name/Function	R/W	Description
[15:11]	Exponent	R/W	5-bit, twos complement, N value for linear format $X = Y \times 2^N$.
[10:0]	Mantissa	R/W	11-bit, twos complement, Y value for linear format $X = Y \times 2^N$.

STATUS_BYTE

Table 56. Register 0x78—STATUS_BYTE

Bits	Bit Name/Function	R/W	Description
7	Reserved	R	Reserved.
6	POWER_OFF	R	This bit is asserted when the unit is not providing power to the output, regardless of the reason, including simply not being enabled.
5	VOUT_OV_FAULT	R	An output overvoltage fault has occurred.
4	IOUT_OC_FAULT	R	An output overcurrent fault has occurred.
3	VIN_UV_FAULT	R	An input undervoltage fault has occurred.
2	Temperature	R	A temperature fault or warning has occurred.
1	CML	R	A communications, memory, or logic fault has occurred.
0	None of the above	R	A fault or warning not listed in Bits[7:1] has occurred.

STATUS_WORD

Table 57. Register 0x79—STATUS_WORD

Bits	Bit Name/Function	R/W	Description
15	VOUT	R	Any bit asserted in STATUS_VOUT asserts this bit.
14	IOUT	R	Any bit asserted in STATUS_IOUT asserts this bit.
13	Input	R	Any bit asserted in STATUS_INPUT asserts this bit.
12	Reserved	R	Reserved.
11	$\overline{\text{POWER_GOOD}}$	R	$\overline{\text{POWER_GOOD}}$ is a negation of POWER_GOOD, which means that the output power is not good. This bit is set when the sensed V_{OUT} is less than the limit programmed in the POWER_GOOD_OFF command. This bit clears when the sensed V_{OUT} voltage is greater than the limit that is programmed in the POWER_GOOD_ON command. This flag also triggers the $\overline{\text{PGOOD}}$ flag in Register 0xFEA0[6].
[10:7]	Reserved	R	Reserved.
6	POWER_OFF	R	This bit is asserted if the unit is not providing power to the output, regardless of the reason, including not being enabled.
5	VOUT_OV_FAULT	R	An output overvoltage fault has occurred.
4	IOUT_OC_FAULT	R	An output overcurrent fault has occurred.
3	VIN_UV_FAULT	R	An input undervoltage fault has occurred.
2	Temperature	R	An overtemperature fault or warning has occurred.
1	CML	R	A communications, memory, or logic fault has occurred.
0	None of the above	R	A fault or warning not listed in Bits[7:1] has occurred.

STATUS_VOUT

Table 58. Register 0x7A—STATUS_VOUT

Bits	Bit Name/Function	R/W	Description
7	VOUT_OV_FAULT	R	An output overvoltage fault has occurred.
[6:5]	Reserved	R	Reserved.
4	VOUT_UV_FAULT	R	An output undervoltage fault has occurred.
3	VOUT_MAX warning		An attempt was made to set the output voltage to a value greater than allowed by the VOUT_MAX command.
[2:0]	Reserved	R	Reserved.

STATUS_IOUT

Table 59. Register 0x7B—STATUS_IOUT

Bits	Bit Name/Function	R/W	Description
7	IOUT_OC_FAULT	R	An output overcurrent fault has occurred.
[6:0]	Reserved	R	Reserved.

STATUS_INPUT

Table 60. Register 0x7C—STATUS_INPUT

Bits	Bit Name/Function	R/W	Description
[7:5]	Reserved	R	Reserved.
4	VIN_UV_FAULT	R	An input undervoltage fault has occurred.
3	VIN_LOW	R	The unit is off due to insufficient input voltage.
2	IIN_OC_FAST_FAULT	R	An input overcurrent fast fault has occurred.
[1:0]	Reserved	R	Reserved.

STATUS_TEMPERATURE

Table 61. Register 0x7D—STATUS_TEMPERATURE

Bits	Bit Name/Function	R/W	Description
7	OT_FAULT	R	An overtemperature fault has occurred.
6	OT_WARNING	R	An overtemperature warning has occurred.
[5:0]	Reserved	R	Reserved.

STATUS_CML

Table 62. Register 0x7E—STATUS_CML

Bits	Bit Name/Function	R/W	Description
7	CMD_ERR	R	An invalid or unsupported command is received.
6	DATA_ERR	R	Invalid or unsupported data is received.
[5:2]	Reserved	R	Reserved.
1	COMM_ERR	R	Other communication fault is detected.
0	Reserved	R	Reserved.

READ_VIN

The READ_VIN command returns the input voltage value (V) in linear format.

Table 63. Register 0x88—READ_VIN

Bits	Bit Name/Function	R/W	Description
[15:11]	Exponent	R	5-bit, twos complement, N value for linear format, $X = Y \times 2^N$.
[10:0]	Mantissa	R	11-bit, twos complement, Y value for linear format, $X = Y \times 2^N$.

READ_IIN

The READ_IIN command returns the input current value (A) in linear format.

Table 64. Register 0x89—READ_IIN

Bits	Bit Name/Function	R/W	Description
[15:11]	Exponent	R	5-bit, twos complement, N value for linear format, $X = Y \times 2^N$.
[10:0]	Mantissa	R	11-bit, twos complement, Y value for linear format, $X = Y \times 2^N$.

READ_VOUT

The READ_VOUT command returns the output voltage value (V) in linear format.

Table 65. Register 0x8B—READ_VOUT

Bits	Bit Name/Function	R/W	Description
[15:0]	Mantissa	R	16-bit, unsigned integer Y value for linear format, $X = Y \times 2^N$. N is defined in the VOUT_MODE command.

READ_IOUT

The READ_IOUT command returns the output current value (A) in linear format.

Table 66. Register 0x8C—READ_IOUT

Bits	Bit Name/Function	R/W	Description
[15:11]	Exponent	R	5-bit, twos complement, N value for linear format, $X = Y \times 2^N$.
[10:0]	Mantissa	R	11-bit, twos complement, Y value for linear format, $X = Y \times 2^N$.

READ_TEMPERATURE

The READ_TEMPERATURE command returns the temperature value (°C) in linear format.

Table 67. Register 0x8D—READ_TEMPERATURE

Bits	Bit Name/Function	R/W	Description
[15:11]	Exponent	R	5-bit, N value for linear format, $X = Y \times 2^N$. 5-bit, twos complement, fixed at 00000.
[10:0]	Mantissa	R	11-bit, twos complement, Y value for linear format, $X = Y \times 2^N$.

READ_DUTY_CYCLE

The READ_DUTY_CYCLE command returns the duty cycle of the PWM output value in linear format.

Table 68. Register 0x94—READ_DUTY_CYCLE

Bits	Bit Name/Function	R/W	Description
[15:11]	Exponent	R	5-bit, twos complement, N value for linear format, $X = Y \times 2^N$ where N is fixed at 10110 (–10 decimal).
[10:0]	Mantissa	R	11-bit, twos complement, Y value for linear format, $X = Y \times 2^N$.

READ_FREQUENCY

The READ_FREQUENCY command returns the switching frequency value in linear format.

Table 69. Register 0x95—READ_FREQUENCY

Bits	Bit Name/Function	R/W	Description
[15:11]	Exponent	R	5-bit, twos complement, N value for linear format, $X = Y \times 2^N$.
[10:0]	Mantissa	R	11-bit, twos complement, Y value for linear format, $X = Y \times 2^N$.

READ_POUT

The READ_POUT command returns the output power (W) of the power converter.

Table 70. Register 0x96—READ_POUT

Bits	Bit Name/Function	R/W	Description
[15:11]	Exponent	R	5-bit, twos complement, N value for linear format, $X = Y \times 2^N$.
[10:0]	Mantissa	R	11-bit, twos complement, Y value for linear format, $X = Y \times 2^N$.

READ_PMBUS_REVISION

The READ_PMBUS_REVISION command returns the PMBus version information. The ADP1052 supports PMBus Revision 1.2. Reading of this command results in a value of 0x22.

Table 71. Register 0x98—READ_PMBUS_REVISION

Bits	Bit Name/Function	R/W	Description
[7:4]	Part1 revision	R	Compliant to PMBus specifications, Part 1: 0010 = Revision 1.2.
[3:0]	Part2 revision	R	Compliant to PMBus specifications, Part 2: 0010 = Revision 1.2.

MFR_ID

Table 72. Register 0x99—MFR_ID

Bits	Bit Name/Function	R/W	Description
[7:0]	MFR_ID	R/W	Reads/writes the ID information of the manufacturer, which can be saved in the EEPROM.

MFR_MODEL

Table 73. Register 0x9A—MFR_MODEL

Bit	Bit Name/Function	R/W	Description
[7:0]	MFR_MODEL	R/W	Reads/writes the model information of the manufacturer, which can be saved in the EEPROM.

MFR_REVISION

Table 74. Register 0x9B—MFR_REVISION

Bit	Bit Name/Function	R/W	Description
[7:0]	MFR_REVISION	R/W	Reads/writes the revision information of the manufacturer, which can be saved in the EEPROM.

MFR_VOUT_MIN

The MFR_VOUT_MIN command returns the minimum output voltage of the power converter after achieving regulation. Write 0xFFFF to reset all values in this register.

Table 75. Register 0xA4—MFR_VOUT_MIN

Bits	Bit Name/Function	R/W	Description
[15:11]	Exponent	R	5-bit, twos complement, N value for linear format, $X = Y \times 2^N$.
[10:0]	Mantissa	R	11-bit, twos complement, Y value for linear format, $X = Y \times 2^N$.

MFR_VOUT_MAX

The MFR_VOUT_MAX command returns the maximum output voltage of the power converter after achieving regulation. Write 0x0000 to reset the value in this register.

Table 76. Register 0xA5—MFR_VOUT_MAX

Bits	Bit Name/Function	R/W	Description
[15:11]	Exponent	R	5-bit, twos complement, N value for linear format, $X = Y \times 2^N$.
[10:0]	Mantissa	R	11-bit, twos complement, Y value for linear format, $X = Y \times 2^N$.

MFR_IOUT_MAX

The MFR_IOUT_MAX command returns the maximum output current of the power converter after achieving regulation. Write 0x0000 to reset the value in this register.

Table 77. Register 0xA6—MFR_IOUT_MAX

Bits	Bit Name/Function	R/W	Description
[15:11]	Exponent	R	5-bit, twos complement, N value for linear format, $X = Y \times 2^N$.
[10:0]	Mantissa	R	11-bit, twos complement, Y value for linear format, $X = Y \times 2^N$.

MFR_POUT_MAX

The MFR_POUT_MAX command returns the maximum output power of the power converter after achieving regulation. Write 0x0000 to reset the value in this register.

Table 78. Register 0xA7—MFR_POUT_MAX

Bits	Bit Name/Function	R/W	Description
[15:11]	Exponent	R	5-bit, twos complement, N value for linear format, $X = Y \times 2^N$.
[10:0]	Mantissa	R	11-bit, twos complement, Y value for linear format, $X = Y \times 2^N$.

IC_DEVICE_ID

Table 79. Register 0xAD—IC_DEVICE_ID

Bit	Bit Name/Function	R/W	Description
[15:0]	IC_DEVICE_ID	R	Reads the IC device ID (default value = 0x4152).

IC_DEVICE_REV

Table 80. Register 0xAE—IC_DEVICE_REV

Bits	Bit Name/Function	R/W	Description
[7:0]	IC_DEVICE_REV	R	Reads the IC revision information. The value is 0x31 in the current silicon.

EEPROM_DATA_00

Table 81. Register 0xB0—EEPROM_DATA_00

Bits	Bit Name/Function	R/W	Description
[7:0]	EEPROM_DATA_00	R block	Block read data from Page 0 of the EEPROM main block. The EEPROM must first be unlocked.

EEPROM_DATA_01

Table 82. Register 0xB1—EEPROM_DATA_01

Bits	Bit Name/Function	R/W	Description
[7:0]	EEPROM_DATA_01	R block	Block read data from Page 1 of the EEPROM main block. The EEPROM must first be unlocked.

EEPROM_DATA_02

Table 83. Register 0xB2—EEPROM_DATA_02

Bits	Bit Name/Function	R/W	Description
[7:0]	EEPROM_DATA_02	R/W block	Block read/write data of Page 2 of the EEPROM main block. The EEPROM must first be unlocked. This page is not recommended for other use.

EEPROM_DATA_03

Table 84. Register 0xB3—EEPROM_DATA_03

Bits	Bit Name/Function	R/W	Description
[7:0]	EEPROM_DATA_03	R/W block	Block read/write data of Page 3 of the EEPROM main block. The EEPROM must first be unlocked. This page is reserved for storing power board parameter data for GUI use.

EEPROM_DATA_04

Table 85. Register 0xB4—EEPROM_DATA_04

Bits	Bit Name/Function	R/W	Description
[7:0]	EEPROM_DATA_04	R/W block	Block read/write data of Page 4 of the EEPROM main block. The EEPROM must first be unlocked.

EEPROM_DATA_05

Table 86. Register 0xB5—EEPROM_DATA_05

Bits	Bit Name/Function	R/W	Description
[7:0]	EEPROM_DATA_05	R/W block	Block read/write data of Page 5 of the EEPROM main block. The EEPROM must first be unlocked.

EEPROM_DATA_06

Table 87. Register 0xB6—EEPROM_DATA_06

Bits	Bit Name/Function	R/W	Description
[7:0]	EEPROM_DATA_06	R/W block	Block read/write data of Page 6 of the EEPROM main block. The EEPROM must first be unlocked.

EEPROM_DATA_07

Table 88. Register 0xB7—EEPROM_DATA_07

Bits	Bit Name/Function	R/W	Description
[7:0]	EEPROM_DATA_07	R/W block	Block read/write data of Page 7 of the EEPROM main block. The EEPROM must first be unlocked.

EEPROM_DATA_08

Table 89. Register 0xB8—EEPROM_DATA_08

Bits	Bit Name/Function	R/W	Description
[7:0]	EEPROM_DATA_08	R/W block	Block read/write data of Page 8 of the EEPROM main block. The EEPROM must first be unlocked.

EEPROM_DATA_09

Table 90. Register 0xB9—EEPROM_DATA_09

Bits	Bit Name/Function	R/W	Description
[7:0]	EEPROM_DATA_09	R/W block	Block read/write data of Page 9 of the EEPROM main block. The EEPROM must first be unlocked.

EEPROM_DATA_10

Table 91. Register 0xBA—EEPROM_DATA_10

Bits	Bit Name/Function	R/W	Description
[7:0]	EEPROM_DATA_10	R/W block	Block read/write data of Page 10 of the EEPROM main block. The EEPROM must first be unlocked.

EEPROM_DATA_11

Table 92. Register 0xBB—EEPROM_DATA_11

Bits	Bit Name/Function	R/W	Description
[7:0]	EEPROM_DATA_11	R/W block	Block read/write data of Page 11 of the EEPROM main block. The EEPROM must first be unlocked.

EEPROM_DATA_12

Table 93. Register 0xBC—EEPROM_DATA_12

Bits	Bit Name/Function	R/W	Description
[7:0]	EEPROM_DATA_12	R/W block	Block read/write data of Page 12 of the EEPROM main block. The EEPROM must first be unlocked.

EEPROM_DATA_13

Table 94. Register 0xBD—EEPROM_DATA_13

Bits	Bit Name/Function	R/W	Description
[7:0]	EEPROM_DATA_13	R/W block	Block read/write data of Page 13 of the EEPROM main block. The EEPROM must first be unlocked.

EEPROM_DATA_14

Table 95. Register 0xBE—EEPROM_DATA_14

Bits	Bit Name/Function	R/W	Description
[7:0]	EEPROM_DATA_14	R/W block	Block read/write data of Page 14 of the EEPROM main block. The EEPROM must first be unlocked.

EEPROM_DATA_15

Table 96. Register 0xBF—EEPROM_DATA_15

Bits	Bit Name/Function	R/W	Description
[7:0]	EEPROM_DATA_15	R/W block	Block read/write data of Page 15 of the EEPROM main block. The EEPROM must first be unlocked.

MFR_TEMPERATURE_MAX

The MFR_TEMPERATURE_MAX command returns the maximum temperature of the power converter after after achieving regulation. Write 0x0000 to reset the value in this register.

Table 97. Register 0xC0—MFR_TEMPERATURE_MAX

Bits	Bit Name/Function	R/W	Description
[15:11]	Exponent	R	5-bit, twos complement, N value for linear format, $X = Y \times 2^N$.
[10:0]	Mantissa	R	11-bit, twos complement, Y value for linear format, $X = Y \times 2^N$.

EEPROM_CRC_CHKSUM

Table 98. Register 0xD1—EEPROM_CRC_CHKSUM

Bits	Bit Name/Function	R/W	Description
[7:0]	CRC checksum	R	Returns the CRC checksum value from the EEPROM download operation.

EEPROM_NUM_RD_BYTES

Table 99. Register 0xD2—EEPROM_NUM_RD_BYTES

Bits	Bit Name/Function	R/W	Description
[7:0]	Number of read bytes returned	R/W	These bits set the number of read bytes that are returned when the EEPROM_DATA_xx commands are used.

EEPROM_ADDR_OFFSET

Table 100. Register 0xD3—EEPROM_ADDR_OFFSET

Bits	Bit Name/Function	R/W	Description
[15:0]	Address offset	R/W	These bits set the address offset of the current EEPROM page.

EEPROM_PAGE_ERASE

Table 101. Register 0xD4—EEPROM_PAGE_ERASE

Bits	Bit Name/Function	R/W	Description
[7:0]	EEPROM page erase	W	Perform a page erase on the selected EEPROM page (Page 3 to Page 15). Wait 35 ms after each page erase operation. The EEPROM must first be unlocked. Page 0 and Page 1 are reserved for storing the default settings and user settings, respectively. The user cannot perform a page erase of Page 0 or Page 1. Page 2 is reserved for internal use; do not erase the contents of Page 2. Page 3 is reserved for storing the board parameters for GUI use; erase Page 3 before storing the board parameters. The following list shows the register setting used to access each page: 0x03 = Page 3. 0x04 = Page 4. 0x05 = Page 5. 0x06 = Page 6. 0x07 = Page 7. 0x08 = Page 8. 0x09 = Page 9. 0x0A = Page 10. 0x0B = Page 11. 0x0C = Page 12. 0x0D = Page 13. 0x0E = Page 14. 0x0F = Page 15.

EEPROM_PASSWORD

Table 102. Register 0xD5—EEPROM_PASSWORD

Bits	Bit Name/Function	R/W	Description
[7:0]	EEPROM password	W	Writes the password using this command to unlock the EEPROM for read/write access. Writes the EEPROM password two consecutive times to unlock the EEPROM. Writes any other value to exit. The factory default password is 0xFF.

TRIM_PASSWORD

Table 103. Register 0xD6—TRIM_PASSWORD

Bits	Bit Name/Function	R/W	Description
[7:0]	Trim password	W	Writes the password using this command to unlock the trim registers for write access. Writes the trim password two consecutive times to unlock the registers. Writes any other value to exit. The trim password is the same as the EEPROM password. The factory default password is 0xFF.

CHIP_PASSWORD

Table 104. Register 0xD7—CHIP_PASSWORD

Bits	Bit Name/Function	R/W	Description
[15:0]	Chip password	W	Writes the correct chip password two consecutive times to unlock the chip registers for read/write access. Writes any other value to exit. The factory default password is 0xFFFF. This register cannot be read. Any read action on this register returns 0.

VIN_SCALE_MONITOR

The VIN_SCALE_MONITOR command is the scale factor between the V_{IN} ADC value and the real input voltage. It is typically used with the READ_VIN command. The value must be in the range of 0 to 1 decimal.

Table 105. Register 0xD8—VIN_SCALE_MONITOR

Bits	Bit Name/Function	R/W	Description
[15:11]	Exponent	R/W	5-bit twos complement N value for linear format, $X = Y \times 2^N$, where N is in the range of −12 to 0 decimal.
[10:0]	Mantissa	R/W	11-bit twos complement Y value for linear format, $X = Y \times 2^N$.

IIN_SCALE_MONITOR

The IIN_SCALE_MONITOR command is the scale factor between the I_{IN} ADC value and the real input current. It is typically used with the READ_IIN command. The value must be in the range of 0 to 1 decimal.

Table 106. Register 0xD9—IIN_SCALE_MONITOR

Bits	Bit Name/Function	R/W	Description
[15:11]	Exponent	R/W	5-bit twos complement, N value for linear mode format, $X = Y \times 2^N$, where N is in the range of −12 to 0 decimal.
[10:0]	Mantissa	R/W	11-bit twos complement, Y value for linear mode format, $X = Y \times 2^N$.

EEPROM_INFO

Register 0xF1 is a read/write block. The EEPROM_INFO command reads the first flag data from the EEPROM.

Table 107. Register 0xF1—EEPROM_INFO

Bits	Bit Name/Function	R/W	Description
[7:0]	EEPROM_INFO	R block	Block read data of the EEPROM information block.

MFR_SPECIFIC_1

Table 108. Register 0xFA—MFR_SPECIFIC_1

Bits	Bit Name/Function	R/W	Description
[7:0]	Customized register	R/W	These bits are available to the user to store customized information. This register also stores the CS2 high-side mode factory analog trim value. Copy this value to Register 0xFE17 to restore the CS2 high-side mode factory trim value.

MFR_SPECIFIC_2

Table 109. Register 0xFB—MFR_SPECIFIC_2

Bits	Bit Name/Function	R/W	Description
[7:0]	Customized register	R/W	These bits are available to the user to store customized information. This register also stores the CS2 high-side mode factory digital offset trim value. Copy this value to Register 0xFE16 to restore the CS2 high-side mode factory trim value.

MANUFACTURER SPECIFIC EXTENDED COMMANDS DESCRIPTIONS

FLAG CONFIGURATION REGISTERS

Register 0xFE00 to Register 0xFE03 set the fault flag response and the resolution after the flag is cleared. Register 0xFE05[5:4] sets the VDD_OV flag response. Register 0xFE05[7:6] sets the global flag reenable delay time.

Table 110. Register 0xFE00 to Register 0xFE05—Flag Response Registers

Register	Bits	Flag	Additional Settings
0xFE00	[7:4]	Reserved	Reserved
	[3:0]	IIN_OC_FAST_FAULT_RESPONSE	Register 0xFE08, Register 0xFE0E, Register 0xFE1A, Register 0xFE1F, Register 0xFEA0, Register 0xFEA3
0xFE01	[7:4]	Extended VOUT_OV_FAULT_RESPONSE	Register 0x40, Register 0x41, Register 0xFE26, Register 0xFE6B, Register 0xFE6C
	[3:0]	CS3_OC_FAULT_RESPONSE	Register 0xFE6A, Register 0xFEA0, Register 0xFEA3
0xFE02	[7:4]	VIN_UV_FAULT_RESPONSE	Register 0x35, Register 0x36, Register 0xFE29, Register 0xFEA1, Register 0xFEA4
	[3:0]	Reserved	Reserved
0xFE03	[7:4]	SR_RC_FAULT_RESPONSE	Register 0xFE1A, Register 0xFEA1, Register 0xFEA4
	[3:0]	FLAGIN_RESPONSE	Register 0xFE12, Register 0xFEA1, Register 0xFEA4
0xFE05	[7:6]	Flag reenable delay	Register 0xFE05, Register 0xFEA0, Register 0xFEA3
	[5:4]	VDD_OV_RESPONSE	
	[3:0]	Reserved	Reserved

Table 111. Register 0xFE00 to Register 0xFE02—Flag Response Register Bit Descriptions

Bits	Bit Name/Function	R/W	Description		
[7:6]	Fault response	R/W	These bits specify the action when the flag is set.		
			Bit 7	**Bit 6**	**Flag Action**
			0	0	Continues operation without interruption.
			0	1	Disables SR1 and SR2.
			1	0	Disables all PWM outputs.
			1	1	Reserved.
[5:4]	Action after flag is cleared	R/W	These bits specify the action when the flag is cleared.		
			Bit 5	**Bit 4**	**Action After Flag Clearing**
			0	0	After the reenable delay time, the PWM outputs are reenabled with a soft start.
			0	1	The PWM outputs are reenabled immediately without a soft start.
			1	0	A PSON signal through Register 0x01, Register 0x02, and/or the CTRL pin, is needed to reenable the PWM outputs.
			1	1	Reserved.
[3:2]	Fault response	R/W	These bits specify the action when the flag is set.		
			Bit 3	**Bit 2**	**Flag Action**
			0	0	Continues operation without interruption.
			0	1	Disables SR1 and SR2.
			1	0	Disables all PWM outputs.
			1	1	Reserved.
[1:0]	Action after flag is cleared	R/W	These bits specify the action when the flag is cleared.		
			Bit 1	**Bit 0**	**Action After Flag Clearing**
			0	0	After the reenable delay time, the PWM outputs are reenabled with a soft start.
			0	1	The PWM outputs are reenabled immediately without a soft start.
			1	0	A PSON signal, through Register 0x01, Register 0x02, and/or the CTRL pin, is needed to reenable the PWM outputs.
			1	1	Reserved.

Table 112. Register 0xFE03—Flag Response Register Bit Descriptions

Bits	Bit Name/Function	R/W	Description			
[7:6]	Fault response	R/W	These bits specify the action when the flag is set.			
			Bit 7	**Bit 6**	**Fault Response**	
			0	0	Continues operation without interruption.	
			0	1	Disables SR1 and SR2.	
			1	0	Disables all PWM outputs.	
			1	1	The rising edges of SR1 and SR2 move to $t_{Rx} + t_{MODU_LIMIT} - t_{OFFSET}$. See the Synchronous Rectification (SR) Reverse Current Protection section for more information.	
[5:4]	Action after the fault flag is cleared	R/W	These bits specify the action when the flag is cleared.			
			Bit 5	**Bit 4**	**Bits[7:6] = 01 or 10**	**Bits[7:6] = 11**
			0	0	After the flag reenable delay time, the PWM outputs are reenabled with a soft start.	SR1 and SR2 follow the soft recovery process.
			0	1	The PWM outputs are reenabled immediately without a soft start.	SR1 and SR2 immediately recover to normal condition.
			1	0	A PSON signal is needed to reenable the PWM outputs.	Reserved.
			1	1	Reserved.	Reserved.
[3:2]	Fault response	R/W	These bits specify the action when the flag is set.			
			Bit 3	**Bit 2**	**Fault Response**	
			0	0	Continues operation without interruption.	
			0	1	Disable SR1 and SR2.	
			1	0	Disable all PWM outputs.	
			1	1	Reserved.	
[1:0]	Action after the fault flag is cleared	R/W	These bits specify the action when the flag is cleared.			
			Bit 1	**Bit 0**	**Action After Fault Flag Clears**	
			0	0	After the flag reenable delay time, the PWM outputs are reenabled with a soft start.	
			0	1	The PWM outputs are reenabled immediately without a soft start.	
			1	0	A PSON signal, programmed in Register 0x01, Register 0x02, and/or the CTRL pin, is needed to reenable the PWM outputs.	
			1	1	Reserved.	

Table 113. Register 0xFE05—Flag Reenable Delay, VDD_OV_RESPONSE

Bits	Bit Name/Function	R/W	Description		
[7:6]	Flag reenable delay	R/W	These bits specify the global delay from the time when a manufacturer specific flag is cleared to the soft start.		
			Bit 7	**Bit 6**	**Typical Delay Time (sec)**
			0	0	250 m
			0	1	500 m
			1	0	1
			1	1	2
5	VDD_OV flag ignore	R/W	This bit enables or disables the VDD_OV flag. 0 = the VDD_OV flag is set when there is a V_{DD} overvoltage condition. When there is a V_{DD} overvoltage condition, the flag is set and the device shuts down. When the V_{DD} overvoltage condition ends, the flag is cleared and the device downloads the EEPROM contents before restarting with a soft start process. 1 = the VDD_OV flag is always cleared. When there is a V_{DD} overvoltage condition, the flag is always cleared and the device continues to operate without interruption.		
4	VDD_OV flag debounce	R/W	This bit sets the debounce time for the VDD_OV flag. 0 = 500 µs debounce time. 1 = 2 µs debounce time.		
[3:0]	Reserved	R/W	Reserved.		

SOFT START AND SOFTWARE RESET REGISTERS

Table 114. Register 0xFE06—Software Reset GO Command

Bits	Bit Name/Function	R/W	Description
[7:1]	Reserved	R/W	Reserved.
0	Software reset GO	W	This bit allows the user to perform a software reset of the ADP1052. Setting this bit resets the device with a restart delay period from the time the ADP1052 is turned off to the time ADP1052 restarts. The restart delay is set using Register 0xFE07[1:0].

Table 115. Register 0xFE07—Software Reset Settings

Bits	Bit Name/Function	R/W	Description		
[7:3]	Reserved	R/W	Reserved.		
2	Additional flag reenable delay	R/W	This bit specifies whether an additional TON_DELAY value is added to the reenable delay after a manufacturer specific flag is cleared and before the ADP1052 begins a soft start. 0 = no additional delay is added to the reenable delay. 1 = additional delay is added to the reenable delay. The delay time is specified in the TON_DELAY command (Register 0x60).		
[1:0]	Restart delay	R/W	These bits specify the delay from the time when a PSON signal is set to the time when the soft start begins.		
			Bit 1	**Bit 0**	**Restart Delay**
			0	0	0 ms
			0	1	500 ms
			1	0	1 sec
			1	1	2 sec

Table 116. Register 0xFE08—Synchronous Rectifier (SR) Soft Start Settings

Bits	Bit Name/Function	R/W	Description		
7	Reserved	R/W	Reserved.		
6	CS1 cycle-by-cycle current limit to disable SR2	R/W	Setting this bit enables the CS1 cycle-by-cycle current limit to disable the SR2 output for the remainder of the switching cycle when cycle-by-cycle current limiting occurs.		
5	CS1 cycle-by-cycle current limit to disable SR1	R/W	Setting this bit enables the CS1 cycle-by-cycle current limit to disable the SR1 output for the remainder of the switching cycle when cycle-by-cycle current limiting occurs.		
4	SR soft start setting	R/W	0 = the synchronous rectifiers perform a soft start only the first time that they are enabled. 1 = the synchronous rectifiers perform a soft start every time that they are enabled.		
[3:2]	SR soft start speed	R/W	When an SR PWM output is configured to turn on with soft start (using Bits[1:0]), the rising edge of the output moves to the left in steps of 40 ns. These bits specify the number of switching cycles that are required to move the SR PWM output in a step of 40 ns.		
			Bit 3	**Bit 2**	**SR Soft Start Timing**
			0	0	The SR PWM outputs change 40 ns in one switching cycle.
			0	1	The SR PWM outputs change 40 ns in four switching cycles.
			1	0	The SR PWM outputs change 40 ns in 16 switching cycles.
			1	1	The SR PWM outputs change 40 ns in 64 switching cycles.
1	SR2 soft start	R/W	Setting this bit enables soft start for SR2.		
0	SR1 soft start	R/W	Setting this bit enables soft start for SR1.		

Table 117. Register 0xFE09—Soft Start Setting of Open-Loop Operation

Bits	Bit Name/Function	R/W	Description
7	Open-loop operation soft start enable	R/W	Setting this bit enables the soft start of open-loop operation.
6	OUTA, OUTB, OUTC, and OUTD edges	R/W	When this bit is set, the falling edges of OUTA, OUTB, OUTC, and OUTD are always after the rising edges in one cycle during the soft start of open-loop operation.
5	SR1 and SR2 edges	R/W	This bit is valid only when Bit 7 of this register is set to 1. 0 = the rising edges of SR1 and SR2 always occur after the falling edges in one cycle during a soft start. 1 = the falling edges of SR1 and SR2 always occur after the rising edges in one cycle during a soft start.
[4:3]	Soft start speed of open-loop operation and open-loop feedforward operation	R/W	When the ADP1052 is configured for open-loop operation, the falling edge of the PWM output moves to the right in steps of 40 ns. When the ADP1052 is configured for open-loop feedforward operation, the modulation edge of the PWM output moves from the original position in steps of 40 ns. These bits specify how many switching cycles are required to move the PWM outputs in 40 ns.

Bit 4	Bit 3	Open-Loop Soft Start Timing
0	0	The PWM outputs change 40 ns in one switching cycle.
0	1	The PWM outputs change 40 ns in four switching cycles.
1	0	The PWM outputs change 40 ns in 16 switching cycles.
1	1	The PWM outputs change 40 ns in 64 switching cycles.

2	Soft start variation for open-loop operation	R/W	Setting this bit enables global variation during the soft start of open-loop operation. 1 = all outputs use the time variation calculated by OUTB ($t_{F2} - t_{R2}$).
[1:0]	Reserved	R/W	Reserved.

BLANKING AND PGOOD SETTING REGISTERS

Table 118. Register 0xFE0B—Flag Blanking During Soft Start

Bits	Bit Name/Function	R/W	Description
7	Blank SR_RC_FAULT flag	R/W	0 = blank this flag during soft start. 1 = do not blank this flag during soft start.
6	Blank FLAGIN flag	R/W	0 = blank this flag during soft start. 1 = do not blank this flag during soft start.
5	Blank LIGHT_LOAD flag and DEEP_LIGHT_LOAD flag	R/W	0 = blank this flag during soft start. 1 = do not blank this flag during soft start.
4	Blank VIN_UV_FAULT flag	R/W	0 = blank this flag during soft start. 1 = do not blank this flag during soft start.
3	Blank IIN_OC_FAST_FAULT flag	R/W	0 = blank this flag during soft start. 1 = do not blank this flag during soft start.
2	Blank IOUT_OC_FAULT flag	R/W	0 = blank this flag during soft start. 1 = do not blank this flag during soft start.
1	Blank CS3_OC_FAULT flag	R/W	0 = blank this flag during soft start. 1 = do not blank this flag during soft start.
0	Blank VOUT_OV_FAULT flag	R/W	0 = blank this flag during soft start. 1 = do not blank this flag during soft start.

Table 119. Register 0xFE0C—Volt-Second Balance Blanking and SR Disable During Soft Start

Bits	Bit Name/Function	R/W	Description
[7:5]	Reserved	R/W	Reserved.
4	VIN_UV_FAULT reenable blank	R/W	0 = VIN_UV_FAULT flag is not blanked during the flag reenable delay. This is the recommended setting if the input voltage signal can be sensed by the ADP1052 before the PSU starts to operate. 1 = VIN_UV_FAULT flag is blanked during the flag reenable delay.
3	First flag ID update	R/W	This bit specifies whether the first flag ID is saved in the EEPROM. If it is set, the first flag ID is saved in the EEPROM. During the V_{DD} power reset, the first flag ID is downloaded from the EEPROM to Register 0xFEA6. 0 = the first flag ID is not saved in the EEPROM. 1 = the first flag ID is saved in the EEPROM.
2	Flag shutdown timing	R/W	Specifies when the PWM outputs are shut down after a manufacturer specific flag is triggered. 0 = the PWM outputs are shut down at the end of the switching cycle. 1 = the PWM outputs are shut down immediately.
1	Volt-second balance blanking	R/W	0 = the volt-second balance control is not blanked during soft start. 1 = the volt-second balance control is blanked during soft start.
0	SR disable	R/W	0 = SR1 and SR2 are not disabled during soft start. 1 = SR1 and SR2 are disabled during soft start.

Table 120. Register 0xFE0D—$\overline{\text{PGOOD}}$ Mask Settings

Bits	Bit Name/Function	R/W	Description
7	VIN_UV_FAULT flag	R/W	1 = $\overline{\text{PGOOD}}$ ignores the VIN_UV_FAULT flag.
6	IIN_OC_FAST_FAULT flag	R/W	1 = $\overline{\text{PGOOD}}$ ignores the IIN_OC_FAST_FAULT flag.
5	IOUT_OC_FAULT flag	R/W	1 = $\overline{\text{PGOOD}}$ ignores the IOUT_OC_FAULT flag.
4	VOUT_OV_FAULT flag	R/W	1 = $\overline{\text{PGOOD}}$ ignores the VOUT_OV_FAULT flag.
3	VOUT_UV_FAULT flag	R/W	1 = $\overline{\text{PGOOD}}$ ignores the VOUT_UV_FAULT flag.
2	OT_FAULT flag	R/W	1 = $\overline{\text{PGOOD}}$ ignores the OT_FAULT flag.
1	OT_WARNING flag	R/W	1 = $\overline{\text{PGOOD}}$ ignores the OT_WARNING flag.
0	SR_RC_FAULT flag	R/W	1 = $\overline{\text{PGOOD}}$ ignores the SR_RC_FAULT flag.

Table 121. Register 0xFE0E—$\overline{\text{PGOOD}}$ Flag Debounce

Bits	Bit Name/Function	R/W	Description		
7	CS1 cycle-by-cycle current limit to disable OUTD	R/W	Setting this bit enables the CS1 cycle-by-cycle current limit to disable the OUTD output for the remainder of the switching cycle when cycle-by-cycle current limiting occurs.		
6	CS1 cycle-by-cycle current limit to disable OUTC	R/W	Setting this bit enables the CS1 cycle-by-cycle current limit to disable the OUTC output for the remainder of the switching cycle when cycle-by-cycle current limiting occurs.		
5	CS1 cycle-by-cycle current limit to disable OUTB	R/W	Setting this bit enables the CS1 cycle-by-cycle current limit to disable the OUTB output for the remainder of the switching cycle when cycle-by-cycle current limiting occurs.		
4	CS1 cycle-by-cycle current limit to disable OUTA	R/W	Setting this bit enables the CS1 cycle-by-cycle current limit to disable the OUTA output for the remainder of the switching cycle when cycle-by-cycle current limiting occurs.		
[3:2]	$\overline{\text{PGOOD}}$ flag clearing debounce	R/W	These bits specify the $\overline{\text{PGOOD}}$ flag clearing debounce, which is the time from when the $\overline{\text{PGOOD}}$ clearing condition is met to the time when the $\overline{\text{PGOOD}}$ flag is cleared.		
			Bit 3	**Bit 2**	**$\overline{\text{PGOOD}}$ Flag Setting Debounce (ms)**
			0	0	0
			0	1	200
			1	0	320
			1	1	600
[1:0]	$\overline{\text{PGOOD}}$ flag setting debounce	R/W	These bits specify the $\overline{\text{PGOOD}}$ flag setting debounce, which is the time from when the $\overline{\text{PGOOD}}$ setting condition is met to the time when the $\overline{\text{PGOOD}}$ flag is set.		
			Bit 1	**Bit 0**	**$\overline{\text{PGOOD}}$ Flag Clearing Debounce (ms)**
			0	0	0
			0	1	200
			1	0	320
			1	1	600

Table 122. Register 0xFE0F—Debounce Time for Asserting $\overline{\text{PGOOD}}$

Bits	Bit Name/Function	R/W	Debounce Time (ms)
7	VIN_UV_FAULT to assert $\overline{\text{PGOOD}}$	R/W	0 = 0 1 = 1.3
6	IIN_OC_FAST_FAULT to assert $\overline{\text{PGOOD}}$	R/W	0 = 0 1 = 1.3
5	IOUT_OC_FAULT to assert $\overline{\text{PGOOD}}$	R/W	0 = 0 1 = 1.3
4	VOUT_OV_FAULT to assert $\overline{\text{PGOOD}}$	R/W	0 = 0 1 = 1.3
3	VOUT_UV_FAULT to assert $\overline{\text{PGOOD}}$	R/W	0 = 0 1 = 1.3
2	OT_FAULT to assert $\overline{\text{PGOOD}}$	R/W	0 = 0 1 = 1.3
1	OT_WARNING to assert $\overline{\text{PGOOD}}$	R/W	0 = 0 1 = 1.3
0	SR_RC_FAULT to assert $\overline{\text{PGOOD}}$	R/W	0 = 0 1 = 1.3

SWITCHING FREQUENCY AND SYNCHRONIZATION REGISTERS

When synchronization is enabled, the ADP1052 takes the SYNI signal and adds the t_{SYNC_DELAY}, together with a 760 ns propagation delay, to generate the internal synchronization reference clock as shown in Figure 65. The ADP1052 uses the reference clock to generate its own clock.

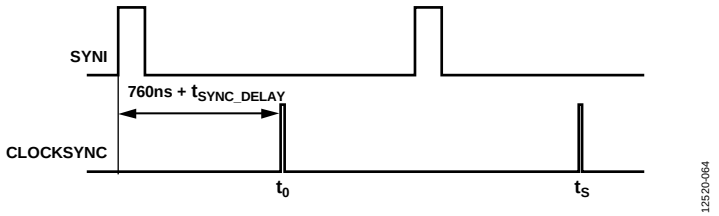

Figure 65. Synchronization Timing

Table 123. Register 0xFE11—Synchronization Delay Time

Bits	Bit Name/Function	R/W	Description
[7:0]	t_{SYNC_DELAY}	R/W	Sets the additional delay of the synchronization reference clock to the rising edge of the SYNI pin signal. Each LSB size is 40 ns. Note that this delay time cannot exceed one switching period. If the PWM 180° phase shift is enabled, this delay time cannot exceed one-half of one switching period.

Table 124. Register 0xFE12—Synchronization General Settings

Bits	Bit Name/Function	R/W	Description
7	Reserved	R/W	Reserved.
6	Phase capture range for synchronization	R/W	Sets the phase capture range. The ADP1052 detects the phase shift between the external and internal clocks when synchronization function is enabled. When the phase shift falls within the range, synchronization starts. 0 = phase capture range is ±3.125% (±11.25°). 1 = phase capture range is ±6.25% (±22.5°). This is the recommended setting.
5	OUTD used as SYNO	R/W	0 = OUTD is used as the PWM output. 1 = OUTD is used as SYNO output.
4	OUTC used as SYNO	R/W	0 = OUTC is used as PWM output. 1 = OUTC is used as SYNO output.
3	Enable synchronization	R/W	Setting this bit enables frequency synchronization as a slave device. The ADP1052 synchronizes with the external clock through the SYNI/FLGI pin. Bit 0 = 0 when synchronization is enabled.
2	FLGI polarity	R/W	Sets the polarity for the SYNI/FLGI pin when the pin is programmed as FLGI. 0 = a high logic level on the FLGI pin sets the FLAGIN flag; a low logic level clears the FLAGIN flag. 1 = a low logic level on the FLGI pin sets the FLAGIN flag; a high logic level sets the FLAGIN flag.
1	FLAGIN flag debounce time	R/W	0 = 0 µs debounce time for the FLAGIN flag. 1 = 100 µs debounce time for the FLAGIN flag.
0	SYNI/FLGI pin function selection	R/W	Configures the SYNI/FLGI pin as a flag input or a synchronization input. When SYNI is not enabled, this bit must be set to 1. 0 = the SYNI/FLGI pin is used as the synchronization input (SYNI). 1 = the SYNI/FLGI pin is used as the flag input (FLGI).

Table 125. Register 0xFE13—Dual-Ended Topology Mode

Bits	Bit Name/Function	R/W	Description
7	Reserved	R/W	Reserved.
6	Dual-ended topology enable	R/W	To use dual-ended topologies, set this bit to 1. It affects the modulation high limit. The modulation limit in each half cycle is one-half of the modulation limit that is programmed in Register 0xFE3C. 0 = operates in single-ended topologies, such as buck, forward, and flyback. 1 = operates in dual-ended topologies, such as full bridge, half bridge, and push pull.
[5:0]	Reserved	R/W	Reserved.

CURRENT SENSE AND LIMIT SETTING REGISTERS

Table 126. Register 0xFE14—CS1 Gain Trim

Bits	Bit Name/Function	R/W	Description
7	Gain polarity	R/W	Setting this bit to 1 means that negative gain is introduced. 0 = positive gain is introduced. 1 = negative gain is introduced.
[6:0]	CS1 gain trim	R/W	This value calibrates the CS1 current sense gain. Apply 1 V dc at the CS1 pin. This register is trimmed until the CS1 value reads 2560 decimal (0xA00).

Table 127. Register 0xFE15—CS2 Gain Trim

Bits	Bit Name/Function	R/W	Description
7	Gain polarity	R/W	Setting this bit to 1 means that negative gain is introduced. 0 = positive gain is introduced. 1 = negative gain is introduced
[6:0]	CS2 gain trim	R/W	This value calibrates the CS2 current sense gain.

Table 128. Register 0xFE16—CS2 Digital Offset Trim

Bits	Bit Name/Function	R/W	Description
[7:0]	CS2 digital offset trim	R/W	This register contains CS2 digital offset trim value. The value is used to calibrate the CS2 value. The default value is the factory trim value of CS2 low-side current mode. Copy the Register 0xFB value to this register to restore the factory trim value of CS2 high-side current sense mode.

Table 129. Register 0xFE17—CS2 Analog Trim

Bits	Bit Name/Function	R/W	Description
7	Reserved	R/W	Reserved.
6	Analog trim polarity	R/W	Setting this bit to 1 means that negative trim is introduced. Setting this bit to 0 means that positive trim is introduced. The default value is the factory trim value of CS2 low-side current sense mode. Copy the Register 0xFA[6] value to this bit to restore the factory trim value of CS2 high-side current sense mode.
[5:0]	CS2 analog trim	R/W	The value calibrates the CS2 analog trim. The default value is the factory trim value of CS2 low-side current mode. Copy the Register 0xFA[5:0] value to these bits to restore the factory trim value of CS2 high-side current mode.

Table 130. Register 0xFE19—CS2 Light Load Threshold

Bits	Bit Name/Function	R/W	Description		
7	CS2 current sense mode	R/W	0 = CS2 current sense is configured as low-side current sense mode. 1 = CS2 current sense is configured as high-side current sense mode.		
[6:5]	CS3_OC_FAULT flag debounce	R/W	These two bits set the CS3_OC_FAULT flag debounce time.		
			Bit 6	**Bit 5**	**Debounce Time (ms)**
			0	0	0
			0	1	10
			1	0	20
			1	1	200
4	CS2 light load mode enable	R/W	Setting this bit enables the light load mode function. When the CS2 current falls below the CS2 light load mode threshold, the ADP1052 operates in light load mode.		

Bits	Bit Name/Function	R/W	Description
[3:0]	CS2 light load threshold	R/W	These bits set the current limit on the CS2 ADC to enter the light load mode value. This value determines the point at which the LIGHT_LOAD flag is set. The hysteresis and the averaging speed are programmable in Register 0xFE1E[5:2].

				Light Load Threshold (mV)			
Bit 3	Bit 2	Bit 1	Bit 0	328 µs	164 µs	82 µs	41 µs
0	0	0	0	0	0	0	0
0	0	0	1	0.9375	1.8750	3.7500	7.5000
0	0	1	0	1.8750	3.7500	7.5000	15.000
0	0	1	1	2.8125	5.6250	11.250	22.500
0	1	0	0	3.7500	7.5000	15.000	30.000
0	1	0	1	4.6875	9.3750	18.750	37.500
0	1	1	0	5.6250	11.250	22.500	45.000
0	1	1	1	6.5625	13.125	26.250	52.500
1	0	0	0	7.5000	15.000	30.000	60.000
1	0	0	1	8.4375	16.875	33.750	67.500
1	0	1	0	9.3750	18.750	37.500	75.000
1	0	1	1	10.313	20.625	41.250	82.500
1	1	0	0	11.250	22.500	45.000	90.000
1	1	0	1	12.188	24.375	48.750	97.500
1	1	1	0	13.125	26.250	52.500	105.00
1	1	1	1	14.063	28.125	56.250	112.50

Table 131. Register 0xFE1A—IIN_OC_FAST_FAULT_LIMIT and SR_RC_FAULT_LIMIT

Bits	Bit Name/Function	R/W	Description
7	Reserved	R/W	Reserved.
[6:4]	IIN_OC_FAST_ FAULT_LIMIT	R/W	If the CS1 cycle-by-cycle current-limit comparator is set and the CS1_OCP flag is triggered, all PWM outputs that are on at that time can be programmed to be immediately disabled for the remainder of the switching cycle. The PWM outputs resume normal operation at the beginning of the next switching cycle. There is an internal counter, N, with an initial value of 0. N counts the CS1_OCP flag triggering number in consecutive switching cycles. If the CS1_OCP flag is triggered in one cycle, then $N_{CURRENT} = N_{PREVIOUS} + 2$. If the CS1_OCP flag is not triggered in one cycle and the previous N > 0, then $N_{CURRENT} = N_{PREVIOUS} - 1$. If the CS1_OCP flag is not triggered and the previous N = 0, then $N_{CURRENT} = 0$. When N reaches the IIN_OC_FAST_FAULT_LIMIT value, the IIN_OC_FAST_FAULT flag is set. Note that there is one cycle in single-ended topologies, such as buck converter and forward converter. There are two cycles in double-ended topologies, such as full bridge converter, half bridge converter, and push pull converter.

Bit 6	Bit 5	Bit 4	Limit Value
0	0	0	2
0	0	1	8
0	1	0	16
0	1	1	64
1	0	0	128
1	0	1	256
1	1	0	512
1	1	1	1024

3	SR_RC_FAULT flag debounce time	R/W	This bit sets the debounce time for the SR_RC_FAULT flag. 0 = 40 ns. 1 = 200 ns.

Bits	Bit Name/Function	R/W	Description			
[2:0]	SR_RC_FAULT_LIMIT	R/W	These bits program the reference voltage for CS2 reverse current comparator for generating the SR_RC_FAULT flag. The difference in voltage between the CS2+ and CS2− pins is compared with this limit. This comparator is an analog comparator.			
			Bit 2	**Bit 1**	**Bit 0**	**Value (mV)**
			0	0	0	−3
			0	0	1	−6
			0	1	0	−9
			0	1	1	−12
			1	0	0	−15
			1	0	1	−18
			1	1	0	−21
			1	1	1	−24

Table 132. Register 0xFE1B—CS2 Deep Light Load Mode Setting

Bits	Bit Name/Function	R/W	Description							
7	Reserved	R/W	Reserved.							
6	CS1 cycle-by-cycle current-limit ref	R/W	0 = the CS1 cycle-by-cycle current-limit reference is 1.2 V. 1 = the CS1 cycle-by-cycle current-limit reference is 0.25 V.							
5	Reserved	R/W	Reserved.							
4	CS2 averaging speed for triggering the IOUT_OC_FAULT flag	R/W	0 = the 9-bit CS2 (output current) averaging speed is used for triggering the IOUT_OC_FAULT flag. The basic VS voltage change rate for constant current control is 1.18 mV/ms. 1 = the 7-bit CS2 (output current) averaging speed is used for triggering the IOUT_OC_FAULT flag. The basic VS voltage change rate for constant current control is 4.72 mV/ms.							
[3:0]	CS2 deep light load mode threshold	R/W	These bits set the current limit on the CS2 ADC to enter the deep light load mode value. This value determines the point at which the DEEP_LIGHT_LOAD flag is set and some PWM outputs are disabled. The averaging speed and the hysteresis are programmed in Register 0xFE1E.							
							Deep Light Load Threshold (mV)			
			Bit 3	**Bit 2**	**Bit 1**	**Bit 0**	**328 µs**	**164 µs**	**82 µs**	**41 µs**
			0	0	0	0	0	0	0	0
			0	0	0	1	0.9375	1.8750	3.7500	7.5000
			0	0	1	0	1.8750	3.7500	7.5000	15.000
			0	0	1	1	2.8125	5.6250	11.250	22.500
			0	1	0	0	3.7500	7.5000	15.000	30.000
			0	1	0	1	4.6875	9.3750	18.750	37.500
			0	1	1	0	5.6250	11.250	22.500	45.000
			0	1	1	1	6.5625	13.125	26.250	52.500
			1	0	0	0	7.5000	15.000	30.000	60.000
			1	0	0	1	8.4375	16.875	33.750	67.500
			1	0	1	0	9.3750	18.750	37.500	75.000
			1	0	1	1	10.313	20.625	41.250	82.500
			1	1	0	0	11.250	22.500	45.000	90.000
			1	1	0	1	12.188	24.375	48.750	97.500
			1	1	1	0	13.125	26.250	52.500	105.00
			1	1	1	1	14.063	28.125	56.250	112.50

Table 133. Register 0xFE1C—PWM Outputs Disable Settings at Deep Light Load Mode

Bits	Bit Name/Function	R/W	Description
[7:6]	Reserved	R/W	Reserved.
5	SR2 disable	R/W	Setting this bit disables the SR2 output when operating in deep light load mode.
4	SR1 disable	R/W	Setting this bit disables the SR1 output when operating in deep light load mode.
3	OUTD disable	R/W	Setting this bit disables the OUTD output when operating in deep light load mode.
2	OUTC disable	R/W	Setting this bit disables the OUTC output when operating in deep light load mode.
1	OUTB disable	R/W	Setting this bit disables the OUTB output when operating in deep light load mode.
0	OUTA disable	R/W	Setting this bit disables the OUTA output when operating in deep light load mode.

Table 134. Register 0xFE1D—Matched Cycle-by-Cycle Current-Limit Settings

Bits	Bit Name/Function	R/W	Description		
7	Reserved	R/W	Reserved.		
6	Enable matched cycle-by-cycle current limit	R/W	Setting this bit enables the matched cycle-by-cycle current-limit function.		
[5:4]	Select PWM output pairs for matched cycle-by-cycle current limit	R/W	These bits select the PWM pairs for matched cycle-by-cycle current limiting.		
			Bit 5	**Bit 4**	**PWM Pairs**
			0	0	OUTB and OUTD
			0	1	OUTA and OUTC
			1	0	OUTC and OUTD
			1	1	OUTA and OUTB
3	OUTD rising edge blanking	R/W	This bit specifies whether the blanking time for the CS1 cycle-by-cycle current-limit comparator is referenced to the rising edge of OUTD. 0 = no blanking at the OUTD rising edge. 1 = blanking time referenced to the OUTD rising edge.		
2	OUTC rising edge blanking	R/W	This bit specifies whether the blanking time for the CS1 cycle-by-cycle current-limit comparator is referenced to the rising edge of OUTC. 0 = no blanking at the OUTC rising edge. 1 = blanking time referenced to the OUTC rising edge.		
1	OUTB rising edge blanking	R/W	This bit specifies whether the blanking time for the CS1 cycle-by-cycle current-limit comparator is referenced to the rising edge of OUTB. 0 = no blanking at the OUTB rising edge. 1 = blanking time referenced to the OUTB rising edge.		
0	OUTA rising edge blanking	R/W	This bit specifies whether the blanking time for the CS1 cycle-by-cycle current-limit comparator is referenced to the rising edge of OUTA. 0 = no blanking at the OUTA rising edge. 1 = blanking time referenced to the OUTA rising edge.		

Table 135. Register 0xFE1E—Light Load Mode and Deep Light Load Mode Settings

Bits	Bit Name/Function	R/W	Description			
[7:6]	CS2 averaging speed for drooping control	R/W	These bits set the CS2 (output current) averaging speed and resolution used for the drooping control. Faster speed corresponds to lower resolution and, therefore, lowers accuracy of the drooping line.			
			Bit 7	**Bit 6**	**Speed (µs)**	**Resolution (Bits)**
			0	0	82	7
			0	1	164	8
			1	0	328	9
			1	1	656	10
[5:4]	Light load mode and deep light load mode averaging speed	R/W	These bits set the averaging speed and resolution used for the light load mode threshold and deep light load mode threshold. Faster speed corresponds to lower resolution and, therefore, to lower accuracy of the threshold.			
			Bit 5	**Bit 4**	**Speed (µs)**	**Resolution (Bits)**
			0	0	41	6
			0	1	82	7
			1	0	164	8
			1	1	328	9

Bits	Bit Name/Function	R/W	Description
[3:2]	Light load mode and deep light load mode hysteresis	R/W	These bits set the amount of hysteresis applied to the light load mode and deep light load mode thresholds. The size of the LSB is affected by different speed and resolution selected in Bits[5:4]. If the 120 mV ADC range is used with 8-bit resolution, the LSB size is 120 mV/2^8 = 469 µV.

Bit 3	Bit 2	Hysteresis (LSB)
0	0	3
0	1	8
1	0	12
1	1	16

Bits	Bit Name/Function	R/W	Description
1	SR2 response to cycle-by-cycle limit	R/W	This bit is applicable only when the SR2 output is programmed to be in complement with the OUTA output. When this bit is set and there is a cycle-by-cycle current limit, the SR2 rising edge is turned on when the cycle-by-cycle current limit disables the OUTA. Its falling edge still follows the programmed value.
0	SR1 response to cycle-by-cycle limit	R/W	This bit is applicable only when the SR1 output is programmed to be in complement with the OUTB output. When this bit is set, and there is a cycle-by-cycle current limit, the SR1 rising edge is turned on when the cycle-by-cycle current limit disables the OUTB. Its falling edge still follows the programmed value.

Table 136. Register 0xFE1F—CS1 Cycle-by-Cycle Current-Limit Settings

Bits	Bit Name/Function	R/W	Description
7	CS1 cycle-by-cycle current-limit comparator ignored	R/W	Setting this bit causes the CS1 OCP comparator output to be ignored. The CS1_OCP internal flag is always cleared.
[6:4]	Leading edge blanking	R/W	These bits determine the leading edge blanking time. During this time, the CS1 OCP comparator output is ignored. This time is measured from the rising edges of OUTA, OUTB, OUTC, and OUTD (programmable in Register 0xFE1D[3:0]).

Bit 6	Bit 5	Bit 4	Leading Edge Blanking Time (ns)
0	0	0	0
0	0	1	40
0	1	0	80
0	1	1	120
1	0	0	200
1	0	1	400
1	1	0	600
1	1	1	800

Bits	Bit Name/Function	R/W	Description
[3:2]	Reserved	R/W	Reserved.
[1:0]	CS1 cycle-by-cycle current-limit debounce time	R/W	These bits set the CS1 cycle-by-cycle current-limit debounce time. This is the minimum time that the CS1 signal must be constantly above the CS1 cycle-by-cycle current-limit reference before the PWM outputs are shut down. When this happens, the selected PWM outputs can be disabled for the remainder of the switching cycle.

Bit 1	Bit 0	Debounce Time (ns)
0	0	0
0	1	40
1	0	80
1	1	120

VOLTAGE SENSE AND LIMIT SETTING REGISTERS

Table 137. Register 0xFE20—VS Gain Trim

Bits	Bit Name/Function	R/W	Description
7	Trim polarity	R/W	0 = positive gain is introduced. 1 = negative gain is introduced.
[6:0]	VS gain trim	R/W	These bits set the amount of gain trim that is applied to the VS ADC reading. This register trims the voltage reading in the READ_VOUT command after the VOUT_CAL_OFFSET trimming is completed. This register is trimmed until the READ_VOUT reading in the register exactly matches the output voltage measurement result.

Table 138. Register 0xFE25—Prebias Start-Up Enable

Bits	Bit Name/Function	R/W	Description
7	Prebias startup enable	R/W	Setting this bit enables the prebias start-up function. If it is enabled, the soft start ramp starts from the current output voltage. The initial PWM modulation value is generated based on the following: the Register 0xFE39 setting, the sensed V_{OUT} value, and the sensed V_{IN} value. To introduce the V_{IN} value for initial modulation calculation, Register 0xFE6C[1] = 1, unless closed-loop input voltage feedforward operation mode is in use.
[6:0]	Reserved	R/W	Reserved.

Table 139. Register 0xFE26—VOUT_OV_FAULT Flag Debounce

Bits	Bit Name/Function	R/W	Description		
[7:6]	VOUT_OV_FAULT flag debounce	R/W	These bits set the VOUT_OV_FAULT flag debounce time.		
			Bit 7	**Bit 6**	**Typical Debounce Time (µs)**
			0	0	0
			0	1	1
			1	0	2
			1	1	8
[5:0]	Reserved	R/W	Reserved		

Table 140. Register 0xFE28—VF Gain Trim

Bits	Bit Name/Function	R/W	Description
7	Trim polarity	R/W	0 = positive gain is introduced. 1 = negative gain is introduced.
[6:0]	VF trim	R/W	These bits set the amount of gain trim that is applied to the VF ADC reading. This register trims the voltage at the VF pin for external resistor tolerances. When there is 1 V on the VF pin, this register is trimmed until the VF value register reads 1280 decimal (0x500).

Table 141. Register 0xFE29—VIN_ON and VIN_OFF Delay

Bits	Bit Name/Function	R/W	Description		
[7:6]	Reserved	R/W	Reserved.		
5	VIN_UV_FAULT enable	R/W	Setting this bit enables the VIN_ON value and the VIN_OFF value used to generate the VIN_UV_FAULT flag.		
4	Power conversion stop delay	R/W	Sets the delay time from when the VIN_LOW flag is set to when the power conversion stops. 0 = 0 ms. 1 = 1 ms.		
[3:2]	Power conversion start delay	R/W	Sets the delay time from the clearing of the VIN_LOW flag to the start of the power conversion.		
			Bit 3	**Bit 2**	**Delay Time (ms)**
			0	0	0
			0	1	10
			1	0	40
			1	1	80

Bits	Bit Name/Function	R/W	Description		
[1:0]	VIN_UV_FAULT flag debounce	R/W	When Bit 5 is set, sets the VIN_UV_FAULT flag debounce time.		
			Bit 1	**Bit 0**	**Typical Debounce Time (ms)**
			0	0	0
			0	1	2.5
			1	0	10
			1	1	100

TEMPERATURE SENSE AND PROTECTION SETTING REGISTERS

Table 142. Register 0xFE2A—RTD Gain Trim

Bits	Bit Name/Function	R/W	Description
7	Gain polarity	R/W	Setting this bit to 1 means that negative gain is introduced. Setting this bit to 0 means that positive gain is introduced.
[6:0]	RTD gain trim	R/W	This value calibrates the RTD sensing gain.

Table 143. Register 0xFE2B—RTD Offset Trim (MSBs)

Bits	Bit Name/Function	R/W	Description
[7:3]	Reserved	R/W	Reserved.
2	RTD current source disable	R/W	Setting this bit to 1, plus the writing value 0x00 to Register 0xFE2D, disables the RTD current source.
1	Trim polarity	R/W	Setting this bit to 1 means that negative offset is introduced. Setting this bit to 0 means that positive offset is introduced.
0	RTD offset trim, MSB	R/W	This bit, together with Register 0xFE2C as the LSBs, sets the amount of offset trim that is applied to the RTD ADC reading.

Table 144. Register 0xFE2C—RTD Offset Trim (LSBs)

Bits	Bit Name/Function	R/W	Description
[7:0]	RTD offset trim, LSBs	R/W	These eight bits, together with Bit 0 in Register 0xFE2B as the MSB, set the amount of offset trim that is applied to the RTD ADC reading.

Table 145. Register 0xFE2D—RTD Current Source Settings

Bits	Bit Name/Function	R/W	Description		
[7:6]	RTD current setting	R/W	These bits set the size of the current source on the RTD pin.		
			Bit 7	**Bit 6**	**Current Source (µA)**
			0	0	10
			0	1	20
			1	0	30
			1	1	40
[5:0]	RTD current trim	R/W	These six bits are used to trim the current source on the RTD pin. Each LSB corresponds to 160 nA, independent of the RTD current setting selected in Bits[7:6].		

Table 146. Register 0xFE2F—OT Hysteresis Settings

Bits	Bit Name/Function	R/W	Description		
[7:3]	Reserved	R/W	Reserved.		
2	OT_WARNING flag debounce	R/W	This bit sets the OT_WARNING flag debounce time. 0 = sets the flag actions debounce time to 100 ms. 1 = sets the flag actions debounce time to 0 ms.		
[1:0]	OT hysteresis	R/W	These bits set the OT hysteresis. Due to the negative temperature coefficient of the NTC thermistor or analog temperature sensor, the OT_FAULT flag clearing voltage threshold is programmed with a voltage greater than the OT_FAULT flag setting voltage threshold.		
			Bit 1	**Bit 0**	**OT Hysteresis**
			0	0	OT hysteresis = 12.5 mV (4 LSBs).
			0	1	OT hysteresis = 25 mV (8 LSBs).
			1	0	OT hysteresis = 37.5 mV (12 LSBs).
			1	1	OT hysteresis = 50 mV (16 LSBs).

DIGITAL COMPENSATOR AND MODULATION SETTING REGISTERS

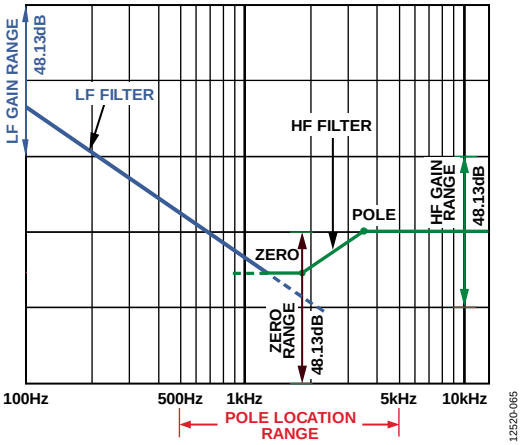

Figure 66. Digital Compensator Programmability

Table 147. Register 0xFE30—Normal Mode Compensator Low Frequency Gain Settings

Bits	Bit Name/ Function	R/W	Description
[7:0]	Normal mode low frequency gain	R/W	This register determines the low frequency gain of the digital compensator in normal mode. It is programmable over a 48.13 dB range. See Figure 66.

Table 148. Register 0xFE31—Normal Mode Compensator Zero Settings

Bits	Bit Name/ Function	R/W	Description
[7:0]	Normal mode zero settings	R/W	This register determines the position of the zero of the digital compensator in normal mode. See Figure 66.

Table 149. Register 0xFE32—Normal Mode Compensator Pole Settings

Bits	Bit Name/ Function	R/W	Description
[7:0]	Normal mode pole settings	R/W	This register determines the position of the pole of the digital compensator in normal mode. See Figure 66.

Table 150. Register 0xFE33—Normal Mode Compensator High Frequency Gain Settings

Bits	Bit Name/ Function	R/W	Description
[7:0]	Normal mode high frequency gain	R/W	This register determines the high frequency gain of the digital compensator in normal mode. It is programmable over a 48.13 dB range. See Figure 66.

Table 151. Register 0xFE34—Light Load Mode Compensator Low Frequency Gain Settings

Bits	Bit Name/ Function	R/W	Description
[7:0]	Light load mode low frequency gain	R/W	This register determines the low frequency gain of the digital compensator in light load mode and deep light load mode. It is programmable over a 48.13 dB range. See Figure 66.

Table 152. Register 0xFE35—Light Load Mode Compensator Zero Settings

Bits	Bit Name/ Function	R/W	Description
[7:0]	Light load mode zero setting	R/W	This register determines the position of the zero of the digital compensator in light load mode and deep light load mode. See Figure 66.

Table 153. Register 0xFE36—Light Load Mode Compensator Pole Settings

Bits	Bit Name/ Function	R/W	Description
[7:0]	Light load mode pole setting	R/W	This register determines the position of the pole of the digital compensator in light load mode and deep light load mode. See Figure 66.

Table 154. Register 0xFE37—Light Load Mode Compensator High Frequency Gain Settings

Bits	Bit Name/ Function	R/W	Description
[7:0]	Light load mode high frequency gain	R/W	This register determines the high frequency gain of the digital compensator in light load mode and deep light load mode. It is programmable over a 48.13 dB range. See Figure 66.

Table 155. Register 0xFE38—CS1 Threshold for Volt-Second Balance

Bits	Bit Name/Function	R/W	Description
[7:0]	CS1 threshold for volt-second balance	R/W	This register sets the CS1 threshold to enable volt-second balance control. The volt-second balance control function is activated only if the CS1 value is greater than this threshold value. Each LSB is 6.25 mV.

Table 156. Register 0xFE39—Nominal Modulation Value for Prebias Startup

Bits	Bit Name/Function	R/W	Description	
[7:0]	Nominal modulation value for prebias start-up function	R/W	These bits set the nominal modulation value when the input voltage and the output voltage are in nominal conditions. It is used to calculate the initial modulation value, based on the sensed V_{OUT} value and the sensed V_{IN} value, for the prebias startup. If Register 0xFE6C[1] is cleared, the input voltage is always regarded as the nominal input condition unless closed-loop feedforward operation is in use.	
			Switching Frequency Range (kHz)	**Resolution Corresponding to LSB (ns)**
			49 to 87	80
			97.5 to 184	40
			195.5 to 379	20
			390.5 to 625	10

Table 157. Register 0xFE3A—Constant Current Speed and SR Driver Delay

Bits	Bit Name/Function	R/W	Description		
[7:6]	VS voltage change rate during constant current mode	R/W	These bits set the VS voltage change rate when operating in constant current mode. The basic change rate for a 9-bit CS2 averaging speed is 1.18 mV/ms. The basic change rate for a 7-bit CS2 averaging speed is 4.72 mV/ms. These two bits set the change rate of the output voltage when operating in constant current mode. For example, in a 12 V output system, if Register 0xFE1B[4] = 1 and Register 0xFE3A[7:6] = 11, the output voltage change rate is 4.72 mV/ms × 8 × 12 = 453 mV/ms		
			Bit 7	**Bit 6**	**Change Rate (mV/ms)**
			0	0	1
			0	1	2
			1	0	4
			1	1	8
[5:0]	SR gate drive delay	R/W	These bits set the SR gate drive delay in steps of 5 ns. The maximum delay is 315 ns.		

Table 158. Register 0xFE3B—PWM 180° Phase Shift Settings

Bits	Bit Name/Function	R/W	Description
7	Volt-second balance leading edge blanking	R/W	Setting this bit means that CS1 is blanked for volt-second balance calculations at the rising edge of those PWMs selected for volt-second balance. The blanking time is the same as for the CS1 cycle-by-cycle current-limit setting.
6	Volt-second balance 50% blanking of each phase	R/W	Setting this bit limits the sampling period for the current on CS1 to less than 50% of a half cycle.
5	SR2 180° phase shift	R/W	Setting this bit adds a 180° phase shift for the timing of the SR2 edges.
4	SR1 180° phase shift	R/W	Setting this bit adds a 180° phase shift for the timing of the SR1 edges.
3	OUTD 180° phase shift	R/W	Setting this bit adds a 180° phase shift for the timing of the OUTD edges.
2	OUTC 180° phase shift	R/W	Setting this bit adds a 180° phase shift for the timing of the OUTC edges.
1	OUTB 180° phase shift	R/W	Setting this bit adds a 180° phase shift for the timing of the OUTB edges.
0	OUTA 180° phase shift	R/W	Setting this bit adds a 180° phase shift for the timing of the OUTA edges.

Figure 67 and Register 0xFE3C in Table 159 describe the modulation limit settings.

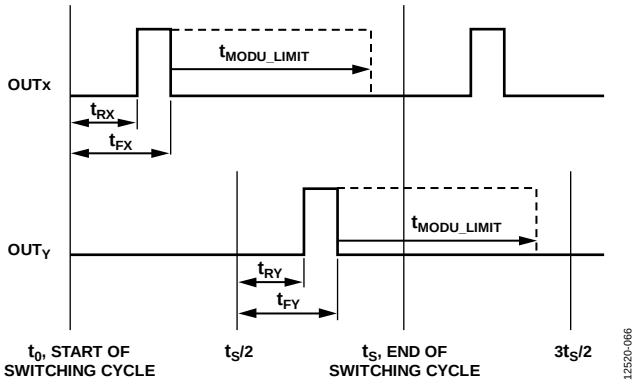

Figure 67. Setting Modulation Limits

Table 159. Register 0xFE3C—Modulation Limit

Bits	Bit Name/Function	R/W	Description	
[7:0]	Modulation limit	R/W	This register sets the modulation limit, t_{MODU_LIMIT} (maximum duty cycle). The modulation limit is the maximum time variation for the modulated edges from the default timing (see Figure 67). The step size of an LSB depends on the switching frequency.	
			Switching Frequency Range (kHz)	**LSB Step Size (ns)**
			49 to 87	80
			97.5 to 184	40
			195.5 to 379	20
			390.5 to 625	10

Table 160. Register 0xFE3D—Feedforward and Soft Start Filter Gain

Bits	Bit Name/Function	R/W	Description		
7	Soft start enable of open-loop input voltage feedforward operation	R/W	Setting this bit enables the soft start procedure of the open-loop input voltage feedforward operation. If this function is used, set Bit 6.		
6	Open-loop input voltage feedforward operation enable	R/W	0 = open-loop input voltage feedforward operation is disabled. 1 = open-loop input voltage feedforward operation is enabled.		
5	High frequency ADC debounce time	R/W	This bit sets the debounce time for detecting the settling of the VS high frequency ADC. Bit 4 must be set to 1 to enable this function. 0 = 5 ms debounce time. 1 = 10 ms debounce time.		
4	High frequency ADC debounce enable	R/W	Setting this bit enables a debounce time for detecting the settling of the VS high frequency ADC at the end of a soft start. The debounce time is set using Bit 5.		
3	Feedforward ADC selection	R/W	Always set this bit to select the 11-bit VF ADC (factory default setting).		
2	Feedforward enable	R/W	This bit enables or disables feedforward control during closed-loop operation. 0 = closed-loop input voltage feedforward control is disabled. 1 = closed-loop input voltage feedforward control is enabled.		
[1:0]	Soft start filter gain	R/W	These bits set the soft start gain of the soft start filter.		
			Bit 1	**Bit 0**	**Soft Start Filter Gain**
			0	0	1
			0	1	2
			1	0	4
			1	1	8

PWM OUTPUTS TIMING REGISTERS

Figure 68 and Register 0xFE3E to Register 0xFE53 describe the implementation and programming of the six PWM signals that are generated by the ADP1052.

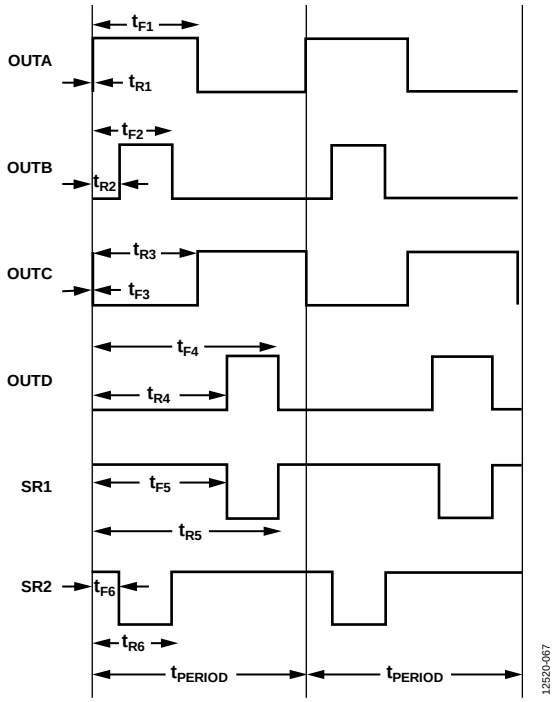

Figure 68. PWM Timing Diagram

Table 161. Register 0xFE3E/41/44/47/4A/4D—OUTA/OUTB/OUTC/OUTD/SR1/SR2 Rising Edge Timing

Bits	Bit Name/Function	R/W	Description
[7:0]	Rising edge timing, t_{Rx}, MSBs	R/W	This register contains the eight MSBs of the 12-bit t_{Rx} time. This value is always used with the top four bits of Register 0xFE40, Register 0xFE43, Register 0xFE46, Register 0xFE49, Register 0xFE4C, and Register 0xFE4F, which contain the four LSBs of the t_{Rx} time. t_{Rx} represents t_{R1}, t_{R2}, t_{R3}, t_{R4}, t_{R5}, and t_{R6}. Each LSB corresponds to 5 ns resolution.

Table 162. Register 0xFE3F/42/45/48/4B/4E—OUTA/OUTB/OUTC/OUTD/SR1/SR2 Falling Edge Timing

Bits	Bit Name/Function	R/W	Description
[7:0]	Falling edge timing, t_{Fx}, MSBs	R/W	This register contains the eight MSBs of the 12-bit t_{Fx} time. This value is always used with the bottom four bits of Register 0xFE40, Register 0xFE43, Register 0xFE46, and Register 0xFE49, as well as Register 0xFE4C and Register 0xFE4F, which contain the four LSBs of the t_{Fx} time. t_{Fx} represents t_{F1}, t_{F2}, t_{F3}, t_{F4}, t_{F5}, and t_{F6}. Each LSB corresponds to 5 ns resolution.

Table 163. Register 0xFE40/43/46/49/4C/4F—OUTA/OUTB/OUTC/OUTD/SR1/SR2 Rising and Falling Edge Timing (LSBs)

Bits	Bit Name/Function	R/W	Description
[7:4]	Rising edge timing, t_{Rx}, LSBs	R/W	These bits contain the four LSBs of the 12-bit t_{Rx} time. This value is always used with the eight bits of Register 0xFE3E, Register 0xFE41, Register 0xFE44, and Register 0xFE47, as well as Register 0xFE4A and Register0xFE4D, which contain the eight MSBs of the t_{Rx} time. t_{Rx} represents t_{R1}, t_{R2}, t_{R3}, t_{R4}, t_{R5}, and t_{R6}. Each LSB corresponds to 5 ns resolution.
[3:0]	Falling edge timing, t_{Fx}, LSBs	R/W	These bits contain the four LSBs of the 12-bit t_{Fx} time. This value is always used with the eight bits of Register 0xFE3F, Register 0xFE42, Register 0xFE45, and Register 0xFE48, as well as Register 0xFE4B and Register 0xFE4E, which contain the eight MSBs of the t_{Fx} time. t_{Fx} represents t_{F1}, t_{F2}, t_{F3}, t_{F4}, t_{F5}, and t_{F6}. Each LSB corresponds to 5 ns resolution.

Table 164. Register 0xFE50—OUTA and OUTB Modulation Settings

Bits	Bit Name/Function	R/W	Description
7	OUTB t_{R2} modulation enable	R/W	0 = no PWM modulation of the t_{R2} edge. 1 = PWM modulation acts on the t_{R2} edge.
6	OUTB t_{R2} modulation sign	R/W	0 = positive sign. Increase of PWM modulation moves t_{R2} to the right. 1 = negative sign. Increase of PWM modulation moves t_{R2} to the left.
5	OUTB t_{F2} modulation enable	R/W	0 = no PWM modulation of the t_{F2} edge. 1 = PWM modulation acts on the t_{F2} edge.
4	OUTB t_{F2} modulation sign	R/W	0 = positive sign. Increase of PWM modulation moves t_{F2} to the right. 1 = negative sign. Increase of PWM modulation moves t_{F2} to the left.
3	OUTA t_{R1} modulation enable	R/W	0 = no PWM modulation of the t_{R1} edge. 1 = PWM modulation acts on the t_{R1} edge.
2	OUTA t_{R1} modulation sign	R/W	0 = positive sign. Increase of PWM modulation moves t_{R1} to the right. 1 = negative sign. Increase of PWM modulation moves t_{R1} to the left.
1	OUTA t_{F1} modulation enable	R/W	0 = no PWM modulation of the t_{F1} edge. 1 = PWM modulation acts on the t_{F1} edge.
0	OUTA t_{F1} modulation sign	R/W	0 = positive sign. Increase of PWM modulation moves t_{F1} to the right. 1 = negative sign. Increase of PWM modulation moves t_{F1} to the left.

Table 165. Register 0xFE51—OUTC and OUTD Modulation Settings

Bits	Bit Name/Function	R/W	Description
7	OUTD t_{R4} modulation enable	R/W	0 = no PWM modulation of the t_{R4} edge. 1 = PWM modulation acts on the t_{R4} edge.
6	OUTD t_{R4} modulation sign	R/W	0 = positive sign. Increase of PWM modulation moves t_{R4} to the right. 1 = negative sign. Increase of PWM modulation moves t_{R4} to the left.
5	OUTD t_{F4} modulation enable	R/W	0 = no PWM modulation of the t_{F4} edge. 1 = PWM modulation acts on the t_{F4} edge.
4	OUTD t_{F4} modulation sign	R/W	0 = positive sign. Increase of PWM modulation moves t_{F4} to the right. 1 = negative sign. Increase of PWM modulation moves t_{F4} to the left.
3	OUTC t_{R3} modulation enable	R/W	0 = no PWM modulation of the t_{R3} edge. 1 = PWM modulation acts on the t_{R3} edge.
2	OUTC t_{R3} modulation sign	R/W	0 = positive sign. Increase of PWM modulation moves t_{R3} to the right. 1 = negative sign. Increase of PWM modulation moves t_{R3} to the left.
1	OUTC t_{F3} modulation enable	R/W	0 = no PWM modulation of the t_{F3} edge. 1 = PWM modulation acts on the t_{F3} edge.
0	OUTC t_{F3} modulation sign	R/W	0 = positive sign. Increase of PWM modulation moves t_{F3} to the right. 1 = negative sign. Increase of PWM modulation moves t_{F3} to the left.

Table 166. Register 0xFE52—SR1 and SR2 Modulation Settings

Bits	Bit Name/Function	R/W	Description
7	SR2 t_{R6} modulation enable	R/W	0 = no PWM modulation of the t_{R6} edge. 1 = PWM modulation acts on the t_{R6} edge.
6	SR2 t_{R6} modulation sign	R/W	0 = positive sign. Increase of PWM modulation moves t_{R6} to the right. 1 = negative sign. Increase of PWM modulation moves t_{R6} to the left.
5	SR2 t_{F6} modulation enable	R/W	0 = no PWM modulation of the t_{F6} edge. 1 = PWM modulation acts on the t_{F6} edge.
4	SR2 t_{F6} modulation sign	R/W	0 = positive sign. Increase of PWM modulation moves t_{F6} to the right. 1 = negative sign. Increase of PWM modulation moves t_{F6} to the left.
3	SR1 t_{R5} modulation enable	R/W	0 = no PWM modulation of the t_{R5} edge. 1 = PWM modulation acts on the t_{R5} edge.
2	SR1 t_{R5} modulation sign	R/W	0 = positive sign. Increase of PWM modulation moves t_{R5} to the right. 1 = negative sign. Increase of PWM modulation moves t_{R5} to the left.
1	SR1 t_{F5} modulation enable	R/W	0 = no PWM modulation of the t_{F5} edge. 1 = PWM modulation acts on the t_{F5} edge.
0	SR1 t_{F5} modulation sign	R/W	0 = positive sign. Increase of PWM modulation moves t_{F5} to the right. 1 = negative sign. Increase of PWM modulation moves t_{F5} to the left.

Table 167. Register 0xFE53—PWM Output Disable

Bits	Bit Name/Function	R/W	Description
[7:6]	Reserved	R/W	Reserved.
5	SR2 disable	R/W	Setting this bit disables the SR2 output.
4	SR1 disable	R/W	Setting this bit disables the SR1 output.
3	OUTD disable	R/W	Setting this bit disables the OUTD output.
2	OUTC disable	R/W	Setting this bit disables the OUTC output.
1	OUTB disable	R/W	Setting this bit disables the OUTB output.
0	OUTA disable	R/W	Setting this bit disables the OUTA output.

VOLT-SECOND BALANCE CONTROL REGISTERS

Table 168. Register 0xFE54—Volt-Second Balance Control General Settings

Bits	Bit Name/Function	R/W	Description
7	Volt-second balance enable control	R/W	Setting this bit enables volt-second balance control.
6	Volt-second balance control source selection, OUTD	R/W	If this bit is set, the OUTD rising edge is selected as the start of the integration period for volt-second balance control.
5	Volt-second balance control source selection, OUTC	R/W	If this bit is set, OUTC rising edge is selected as the start of the integration period for volt-second balance control.
4	Volt-second balance control source selection, OUTB	R/W	If this bit is set, OUTB rising edge is selected as the start of the integration period for volt-second balance control.
3	Volt-second balance control source selection, OUTA	R/W	If this bit is set, OUTA rising edge is selected as the start of the integration period for volt-second balance control.
2	Volt-second balance control limit	R/W	This bit sets the maximum amount of modulation from the volt-second control circuit. 0 = ±160 ns. 1 = ±80 ns.
[1:0]	Volt-second balance control gain	R/W	These bits set the gain of the volt-second balance control. The gain can be changed by a factor of 64. When these bits are set to 00, it takes approximately 700 ms to achieve volt-second balance. When these bits are set to 11, it takes approximately 10 ms to achieve volt-second balance.

Bit 1	Bit 0	Volt-Second Balance Loop Gain
0	0	1
0	1	4
1	0	16
1	1	64

Table 169. Register 0xFE55—Volt-Second Balance Control on OUTA and OUTB

Bits	Bit Name/Function	R/W	Description
7	t_{R2} balance setting	R/W	Setting this bit enables modulation from balancing control on the OUTB rising edge, t_{R2}.
6	t_{R2} balance direction	R/W	0 = positive sign. Increase of balancing control modulation moves t_{R2} right. 1 = negative sign. Increase of balancing control modulation moves t_{R2} left.
5	t_{F2} balance setting	R/W	Setting this bit enables modulation from balancing control on the OUTB falling edge, t_{F2}.
4	t_{F2} balance direction	R/W	0 = positive sign. Increase of balancing control modulation moves t_{F2} right. 1 = negative sign. Increase of balancing control modulation moves t_{F2} left.
3	t_{R1} balance setting	R/W	Setting this bit enables modulation from balancing control on the OUTA rising edge, t_{R1}.
2	t_{R1} balance direction	R/W	0 = positive sign. Increase of balancing control modulation moves t_{R1} right. 1 = negative sign. Increase of balancing control modulation moves t_{R1} left.
1	t_{F1} balance setting	R/W	Setting this bit enables modulation from balancing control on the OUTA falling edge, t_{F1}.
0	t_{F1} balance direction	R/W	0 = positive sign. Increase of balancing control modulation moves t_{F1} right. 1 = negative sign. Increase of balancing control modulation moves t_{F1} left.

Table 170. Register 0xFE56—Volt-Second Balance Control on OUTC and OUTD

Bits	Bit Name/Function	R/W	Description
7	t_{R4} balance setting	R/W	Setting this bit enables modulation from balancing control on the OUTD rising edge, t_{R4}.
6	t_{R4} balance setting	R/W	0 = positive sign. Increase of balancing control modulation moves t_{R4} right. 1 = negative sign. Increase of balancing control modulation moves t_{R4} left.
5	t_{F4} balance setting	R/W	Setting this bit enables modulation from balancing control on the OUTD falling edge, t_{F4}.
4	t_{F4} balance direction	R/W	0 = positive sign. Increase of balancing control modulation moves t_{F4} right. 1 = negative sign. Increase of balancing control modulation moves t_{F4} left.
3	t_{R3} balance setting	R/W	Setting this bit enables modulation from balancing control on the OUTC rising edge, t_{R3}.
2	t_{R3} balance direction	R/W	0 = positive sign. Increase of balancing control modulation moves t_{R3} right. 1 = negative sign. Increase of balancing control modulation moves t_{R3} left.
1	t_{F3} balance setting	R/W	Setting this bit enables modulation from balancing control on the OUTC falling edge, t_{F3}.
0	t_{F3} balance direction	R/W	0 = positive sign. Increase of balancing control modulation moves t_{F3} right. 1 = negative sign. Increase of balancing control modulation moves t_{F3} left.

Table 171. Register 0xFE57—Volt-Second Balance Control on SR1 and SR2

Bits	Bit Name/Function	R/W	Description
7	t_{R6} balance setting	R/W	Setting this bit enables modulation from balancing control on the SR2 rising edge, t_{R6}.
6	t_{R6} balance direction	R/W	0 = positive sign. Increase of balancing control modulation moves t_{R6} right. 1 = negative sign. Increase of balancing control modulation moves t_{R6} left.
5	t_{F6} balance setting	R/W	Setting this bit enables modulation from balancing control on the SR2 falling edge, t_{F6}.
4	t_{F6} balance direction	R/W	0 = positive sign. Increase of balancing control modulation moves t_{F6} right. 1 = negative sign. Increase of balancing control modulation moves t_{F6} left.
3	t_{R5} balance setting	R/W	Setting this bit enables modulation from balancing control on the SR1 rising edge, t_{R5}.
2	t_{R5} balance direction	R/W	0 = positive sign. Increase of balancing control modulation moves t_{R5} right. 1 = negative sign. Increase of balancing control modulation moves t_{R5} left.
1	t_{F5} balance setting	R/W	Setting this bit enables modulation from balancing control on the SR1 falling edge, t_{F5}.
0	t_{F5} balance direction	R/W	0 = positive sign. Increase of balancing control modulation moves t_{F5} right. 1 = negative sign. Increase of balancing control modulation moves t_{F5} left.

DUTY CYCLE READING SETTING REGISTERS

Table 172. Register 0xFE58—Duty Cycle Reading Settings

Bits	Bit Name/Function	R/W	Description
[7:6]	Reserved	R/W	Reserved.
5	OUTD duty cycle reporting	R/W	1 = READ_DUTY_CYCLE reports OUTD duty cycle value.
4	OUTC duty cycle reporting	R/W	1 = READ_DUTY_CYCLE reports OUTC duty cycle value.
3	OUTB duty cycle reporting	R/W	1 = READ_DUTY_CYCLE reports OUTB duty cycle value.
2	OUTA duty cycle reporting	R/W	1 = READ_DUTY_CYCLE reports OUTA duty cycle value.
1	Duty cycle reporting for phase-shifted topology	R/W	Setting this bit enables duty cycle reporting for phase-shifted full bridge topology. The duty cycle value represents the overlapping of OUTA and OUTD in the phase-shifted full bridge topology.
0	Polarity setting for input voltage compensation	R/W	Setting this bit applies an offset on the input voltage reading, READ_VIN, based on the reading of the input current, READ_IIN. The compensation multiplier is set in Register 0xFE59. It is used to compensate the voltage drop caused by the current conduction. 0 = positive polarity compensation. 1 = negative polarity compensation.

Table 173. Register 0xFE59—Input Voltage Compensation Multiplier

Bits	Bit Name/Function	R/W	Description
[7:0]	Input voltage compensation multiplier	R/W	These bits specify the multiplier, N, for the input voltage compensation coefficient. The compensation equation is N × (Register 0xFEA7[15:4] value) ÷ 2^{11}, and the result is added to Register 0xFEAC[15:5]. The compensation polarity is set by Register 0xFE58[0].

ADAPTIVE DEAD TIME COMPENSATION REGISTERS

Table 174. Register 0xFE5A—Adaptive Dead Time Compensation Threshold

Bits	Bit Name/Function	R/W	Description
[7:0]	Adaptive dead time compensation threshold	R/W	This register sets the adaptive dead time compensation threshold. The 8-bit number is compared to the 8 MSBs of the CS1 value register (Register 0xFEA7). When the CS1 current falls below this threshold, the edges of the PWM signals are affected as a linear function of the CS1 current, as programmed in Register 0xFE5B to Register 0xFE60. When the register is programmed to 0x00, the adaptive dead time compensation function is disabled.

Table 175. Register 0xFE5B—OUTA Dead Time

Bits	Bit Name/Function	R/W	Description			
7	t_{R1} polarity	R/W	0 = positive polarity; 1 = negative polarity.			
[6:4]	t_{R1} offset multiplier	R/W	This value multiplies the step size specified by Register 0xFE66[2:0] to determine the t_{R1} offset from nominal timing at 0 A input current.			
			Bit 6	**Bit 5**	**Bit 4**	**Multiplier**
			0	0	0	0
			0	0	1	1
			0	1	0	2
			0	1	1	3
			1	0	0	4
			1	0	1	5
			1	1	0	6
			1	1	1	7

Bits	Bit Name/Function	R/W	Description
3	t_{F1} polarity	R/W	0 = positive polarity; 1 = negative polarity.
[2:0]	t_{F1} offset multiplier	R/W	This value multiplies the step size specified by Register 0xFE66[2:0] to determine the t_{F1} offset from nominal timing at 0 A input current.

Bit 2	Bit 1	Bit 0	Multiplier
0	0	0	0
0	0	1	1
0	1	0	2
0	1	1	3
1	0	0	4
1	0	1	5
1	1	0	6
1	1	1	7

Table 176. Register 0xFE5C—OUTB Dead Time

Bits	Bit Name/Function	R/W	Description
7	t_{R2} polarity	R/W	0 = positive polarity; 1 = negative polarity.
[6:4]	t_{R2} offset multiplier		This value multiplies the step size specified by Register 0xFE66[2:0] to determine the t_{R2} offset from nominal timing at 0 A input current.

Bit 6	Bit 5	Bit 4	Multiplier
0	0	0	0
0	0	1	1
0	1	0	2
0	1	1	3
1	0	0	4
1	0	1	5
1	1	0	6
1	1	1	7

3	t_{F2} polarity	R/W	0 = positive polarity; 1 = negative polarity.
[2:0]	t_{F2} offset multiplier	R/W	This value multiplies the step size specified by Register 0xFE66[2:0] to determine the t_{F2} offset from nominal timing at 0 A input current.

Bit 2	Bit 1	Bit 0	Multiplier
0	0	0	0
0	0	1	1
0	1	0	2
0	1	1	3
1	0	0	4
1	0	1	5
1	1	0	6
1	1	1	7

Table 177. Register 0xFE5D—OUTC Dead Time

Bits	Bit Name/Function	R/W	Description
7	t_{R3} polarity	R/W	0 = positive polarity; 1 = negative polarity.
[6:4]	t_{R3} offset multiplier		This value multiplies the step size specified by Register 0xFE66[2:0] to determine the t_{R3} offset from nominal timing at 0 A input current.

Bit 6	Bit 5	Bit 4	Multiplier
0	0	0	0
0	0	1	1
0	1	0	2
0	1	1	3
1	0	0	4
1	0	1	5
1	1	0	6
1	1	1	7

3	t_{F3} polarity	R/W	0 = positive polarity; 1 = negative polarity.

Bits	Bit Name/Function	R/W	Description			
[2:0]	t_{F3} offset multiplier	R/W	This value multiplies the step size specified by Register 0xFE66[2:0] to determine the t_{F3} offset from nominal timing at 0 A input current.			
			Bit 2	**Bit 1**	**Bit 0**	**Multiplier**
			0	0	0	0
			0	0	1	1
			0	1	0	2
			0	1	1	3
			1	0	0	4
			1	0	1	5
			1	1	0	6
			1	1	1	7

Table 178. Register 0xFE5E—OUTD Dead Time

Bits	Bit Name/Function	R/W	Description			
7	t_{R4} polarity	R/W	0 = positive polarity; 1 = negative polarity.			
[6:4]	t_{R4} offset multiplier		This value multiplies the step size specified by Register 0xFE66[2:0] to determine the t_{R4} offset from nominal timing at 0 A input current.			
			Bit 6	**Bit 5**	**Bit 4**	**Multiplier**
			0	0	0	0
			0	0	1	1
			0	1	0	2
			0	1	1	3
			1	0	0	4
			1	0	1	5
			1	1	0	6
			1	1	1	7
3	t_{F4} polarity	R/W	0 = positive polarity; 1 = negative polarity.			
[2:0]	t_{F4} offset multiplier	R/W	This value multiplies the step size specified by Register 0xFE66[2:0] to determine the t_{F4} offset from nominal timing at 0 A input current.			
			Bit 2	**Bit 1**	**Bit 0**	**Multiplier**
			0	0	0	0
			0	0	1	1
			0	1	0	2
			0	1	1	3
			1	0	0	4
			1	0	1	5
			1	1	0	6
			1	1	1	7

Table 179. Register 0xFE5F—SR1 Dead Time

Bits	Bit Name/Function	R/W	Description			
7	t_{R5} polarity	R/W	0 = positive polarity; 1 = negative polarity.			
[6:4]	t_{R5} offset multiplier		This value multiplies the step size specified by Register 0xFE66[2:0] to determine the t_{R5} offset from nominal timing at 0 A input current.			
			Bit 6	**Bit 5**	**Bit 4**	**Multiplier**
			0	0	0	0
			0	0	1	1
			0	1	0	2
			0	1	1	3
			1	0	0	4
			1	0	1	5
			1	1	0	6
			1	1	1	7
3	t_{F5} polarity	R/W	0 = positive polarity; 1 = negative polarity.			

Bits	Bit Name/Function	R/W	Description			
[2:0]	t_{F5} offset multiplier	R/W	This value multiplies the step size specified by Register 0xFE66[2:0]to determine the t_{F5} offset from nominal timing at 0 A input current.			
			Bit 2	**Bit 1**	**Bit 0**	**Multiplier**
			0	0	0	0
			0	0	1	1
			0	1	0	2
			0	1	1	3
			1	0	0	4
			1	0	1	5
			1	1	0	6
			1	1	1	7

Table 180. Register 0xFE60—SR2 Dead Time

Bits	Bit Name/Function	R/W	Description			
7	t_{R6} polarity	R/W	0 = positive polarity; 1 = negative polarity.			
[6:4]	t_{R6} offset multiplier		This value multiplies the step size specified by Register 0xFE66[2:0] to determine the t_{R6} offset from nominal timing at 0 A input current.			
			Bit 6	**Bit 5**	**Bit 4**	**Multiplier**
			0	0	0	0
			0	0	1	1
			0	1	0	2
			0	1	1	3
			1	0	0	4
			1	0	1	5
			1	1	0	6
			1	1	1	7
3	t_{F6} polarity	R/W	0 = positive polarity; 1 = negative polarity.			
[2:0]	t_{F6} offset multiplier	R/W	This value multiplies the step size specified by Register 0xFE66[2:0] to determine the t_{F6} offset from nominal timing at 0 A input current.			
			Bit 2	**Bit 1**	**Bit 0**	**Multiplier**
			0	0	0	0
			0	0	1	1
			0	1	0	2
			0	1	1	3
			1	0	0	4
			1	0	1	5
			1	1	0	6
			1	1	1	7

OTHER REGISTER SETTINGS

Table 181. Register 0xFE61—GO Commands

Bits	Bit Name/Function	R/W	Description
[7:3]	Reserved	R/W	Reserved.
2	Frequency go	R/W	This bit synchronously latches the contents of Register 0x33 into the shadow registers used to calculate the switching frequency. Reading of this bit always returns 1.
1	PWM setting go	R/W	This bit synchronously latches the contents of Registers 0xFE3E to Register 0xFE53 into the shadow registers used to calculate the PWM edge timing. Reading this bit always returns 1.
0	Reserved	R/W	Reserved.

Table 182. Register 0xFE62—Customized Register

Bits	Bit Name/Function	R/W	Description
[7:0]	Customized register	R/W	These bits are available to the user to store customized information.

Table 183. Register 0xFE63—Modulation Reference MSBs Setting for Open-Loop Input Voltage Feedforward Operation

Bits	Bit Name/Function	R/W	Description	
[7:0]	Modulation reference setting MSBs	R/W	This register sets the eight MSBs of the modulation reference in open-loop feedforward operation mode. The step size of an LSB depends on the switching frequency.	
			Switching Frequency Range (kHz)	**LSB Step Size (ns)**
			49 to 87	80
			97.5 to 184	40
			195.5 to 379	20
			390.5 to 625	10

Table 184. Register 0xFE64—Modulation Reference LSBs Setting for Open-Loop Input Voltage Feedforward Operation

Bits	Bit Name/Function	R/W	Description	
[7:0]	Modulation reference setting LSBs	R/W	This register sets the eight LSBs of the modulation reference in open-loop feedforward operation mode. The step size of an LSB depends on the switching frequency.	
			Switching Frequency Range (kHz)	**LSB Step Size (ps)**
			49 to 87	312.5
			97.5 to 184	156.25
			195.5 to 379	78.125
			390.5 to 625	39.0625

Table 185. Register 0xFE65—Peak Value and Average Value Update Rate Settings

Bits	Bit Name/ Function	R/W	Description			
[7:6]	Reserved	R/W	Reserved.			
[5:3]	Peak value update rate	R/W	These bits specify the update rate for the peak value of the output voltage (MFR_VOUT_MAX/_MIN), output current (MFR_IOUT_MAX), output power (MFR_POUT_MAX), and temperature (MFR_TEMPERATURE_MAX).			
			Bit 2	**Bit 1**	**Bit 0**	**Update Rate**
			0	0	0	2.6 ms
			0	0	1	1.3 ms
			0	1	0	655 µs
			0	1	1	327 µs
			1	0	0	163 µs
			1	0	1	82 µs
[2:0]	Average value update rate	R/W	These bits specify the update rate for the average input current (READ_IIN), output current (READ_IOUT), output power (READ_POUT), and temperature (READ_TEMPERATURE_1).			
			Bit 2	**Bit 1**	**Bit 0**	**Update Rate (ms)**
			0	0	0	10
			0	0	1	63
			0	1	0	126
			0	1	1	252
			1	0	0	504

Table 186. Register 0xFE66—Adaptive Dead Time Compensation Configuration

Bits	Bit Name/Function	R/W	Description		
[7:6]	Averaging period	R/W	These bits specify the averaging period for the CS1 current used to set the adaptive dead time. It is recommended that the averaging time be set to a value much greater than any transient condition.		
			Bit 7	**Bit 6**	**Averaging Period (ms)**
			0	0	2.5
			0	1	1.2
			1	0	0.6
			1	1	0.3
[5:3]	Update rate	R/W	The adaptive dead time compensation algorithm adjusts dead time in steps of 5 ns. These bits program the number of PWM switching cycles between each step. The number is calculated as $2^N + 1$, where N is the 3-bit value specified by these bits. For example, if N = 6 (110 binary), each PWM edge is adjusted by 5 ns every $2^6 + 1 = 65$ switching cycles.		

Bits	Bit Name/Function	R/W	Description			
[2:0]	Offset step size	R/W	These bits specify the programming step size for Register 0xFE5B to Register 0xFE60, Bits[6:4] and Bits[2:0].			
			Bit 2	**Bit 1**	**Bit 0**	**LSB Step Size (ns)**
			0	0	0	5
			0	0	1	10
			0	1	0	15
			0	1	1	20
			1	0	0	25
			1	0	1	30
			1	1	0	35
			1	1	1	40

Table 187. Register 0xFE67—Open-Loop Operation Settings

Bits	Bit Name/Function	R/W	Description
7	Reserved	R	Reserved.
6	Pulse skipping mode enable	R/W	1 = enables the pulse skipping mode. If the ADP1052 requires a modulation value that is less than the threshold set by Register 0xFE69, pulse skipping is in use.
5	SR2 open-loop operation enable	R/W	This bit is set when SR2 is in open-loop operation mode.
4	SR1 open-loop operation enable	R/W	This bit is set when SR1 is in open-loop operation mode.
3	OUTD open-loop operation enable	R/W	This bit is set when OUTD is in open-loop operation mode.
2	OUTC open-loop operation enable	R/W	This bit is set when OUTC is in open-loop operation mode.
1	OUTB open-loop operation enable	R/W	This bit is set when OUTB is in open-loop operation mode.
0	OUTA open-loop operation enable	R/W	This bit is set when OUTA is in open-loop operation mode.

Table 188. Register 0xFE68—Offset Setting for SR1 and SR2

Bits	Bit Name/Function	R/W	Description
[7:0]	The offset setting for SR1/SR2	R/W	If SR_RC_FAULT flag is triggered and Register 0xFE03[7:6] = 11, these bits set the offset value (t_{OFFSET}) on the SR1 and SR2 rising edges. The rising edges are moved left from t_{Rx} + t_{MODU_LIMIT} by t_{OFFSET}. Each step corresponds to 5 ns.

Table 189. Register 0xFE69—Pulse Skipping Mode Threshold

Bits	Bit Name/Function	R/W	Description
[7:0]	Pulse skipping mode threshold	R/W	These bits set the modulation pulse width threshold for pulse skipping. Each LSB is 5 ns.

Table 190. Register 0xFE6A—CS3_OC_FAULT_LIMIT

Bits	Bit Name/Function	R/W	Description
[7:0]	CS3_OC_FAULT_LIMIT	R/W	The eight MSB value of the CS3 value register in Register 0xFEA9 is compared with this 8-bit number. If the 8 MSB value is greater, the CS3_OC_FAULT flag is set.

Table 191. Register 0xFE6B—Modulation Threshold for OVP Selection

Bits	Bit Name/Function	R/W	Description	
[7:0]	Modulation threshold for conditional OVP responses	R/W	This value sets modulation threshold for conditional OVP response. When the real-time modulation value is above this threshold, the LARGE_MODULATION flag in Register 0xFE6C[2] is set.	
			Switching Frequency Range (kHz)	**Resolution Corresponding to LSB (ns)**
			49 to 87	80
			97.5 to 184	40
			195.5 to 379	20
			390.5 to 625	10

Table 192. Register 0xFE6C—Modulation Flag for OVP Selection

Bits	Bit Name/Function	R/W	Description
[7:3]	Reserved	R/W	Reserved.
2	LARGE_MODULATION	R	This bit is set when the modulation value is above the threshold set in Register 0xFE6B.
1	V_{IN} feedforward prebias startup	R/W	This bit is applicable only if the closed-loop feedforward operation is disabled (Register 0xFE3D[2] = 0). If the closed-loop feedforward operation is enabled, V_{IN} is always included for the calculation of the initial PWM modulation value. 1 = the initial PWM modulation value is calculated by the nominal modulation value (Register 0xFE39), the sensed V_{IN} voltage, and the sensed V_{OUT} voltage. 0 = the initial PWM modulation value is calculated by the nominal modulation value (Register 0xFE39) and the sensed V_{OUT} voltage. The V_{IN} voltage is ignored.
0	Conditional OVP enable	R/W	This bit sets the OVP actions when the VOUT_OV_FAULT flag is triggered. 0 = conditional OVP is disabled. The OVP action follows the PMBus VOUT_OV_FAULT_RESPONSE command (Register 0x41). 1 = conditional OVP is enabled. If Bit 2 = 1, OVP action follows the PMBus VOUT_OV_FAULT_RESPONSE (Register 0x41). If Bit 2 = 0, OVP action follows the extended VOUT_OV_FAULT_RESPONSE action (Register 0xFE01[7:4]).

Table 193. Register 0xFE6D—OUTA and OUTB Adjustment Reference During Synchronization

Bits	Bit Name/Function	R/W	Description
7	t_{R2} adjustment reference	R/W	Setting this bit enables edge adjustment on the OUTB rising edge, t_{R2}.
6	t_{R2} refers to t_S or $t_S/2$	R/W	0 = adjustment refers to $t_S/2$. 1 = adjustment refers to t_S.
5	t_{F2} adjustment reference	R/W	Setting this bit enables edge adjustment on the OUTB falling edge, t_{F2}.
4	t_{F2} refers to t_S or $t_S/2$	R/W	0 = adjustment refers to $t_S/2$. 1 = adjustment refers to t_S.
3	t_{R1} adjustment reference	R/W	Setting this bit enables edge adjustment on the OUTA rising edge, t_{R1}.
2	t_{R1} refers to t_S or $t_S/2$	R/W	0 = adjustment refers to $t_S/2$. 1 = adjustment refers to t_S.
1	t_{F1} adjustment reference	R/W	Setting this bit enables edge adjustment on the OUTA falling edge, t_{F1}.
0	t_{F1} refers to t_S or $t_S/2$	R/W	0 = adjustment refers to $t_S/2$. 1 = adjustment refers to t_S.

Table 194. Register 0xFE6E—OUTC and OUTD Adjustment Reference During Synchronization

Bits	Bit Name/Function	R/W	Description
7	t_{R4} adjustment reference	R/W	Setting this bit enables edge adjustment on the OUTD rising edge, t_{R4}.
6	t_{R4} refers to t_S or $t_S/2$	R/W	0 = adjustment refers to $t_S/2$. 1 = adjustment refers to t_S.
5	t_{F4} adjustment reference	R/W	Setting this bit enables edge adjustment on the OUTD falling edge, t_{F4}.
4	t_{F4} refers to t_S or $t_S/2$	R/W	0 = adjustment refers to $t_S/2$. 1 = adjustment refers to t_S.
3	t_{R3} adjustment reference	R/W	Setting this bit enables edge adjustment on the OUTC rising edge, t_{R3}.
2	t_{R3} refers to t_S or $t_S/2$	R/W	0 = adjustment refers to $t_S/2$. 1 = adjustment refers to t_S.
1	t_{F3} adjustment reference	R/W	Setting this bit enables edge adjustment on the OUTC falling edge, t_{F3}.
0	t_{F3} refers to t_S or $t_S/2$	R/W	0 = adjustment refers to $t_S/2$. 1 = adjustment refers to t_S.

Table 195. Register 0xFE6F—SR1 and SR2 Adjustment Reference During Synchronization

Bits	Bit Name/Function	R/W	Description
7	t_{R6} adjustment reference	R/W	Setting this bit enables edge adjustment on the SR2 rising edge, t_{R6}.
6	t_{R6} refers to t_S or $t_S/2$	R/W	0 = adjustment refers to $t_S/2$. 1 = adjustment refers to t_S.
5	t_{F6} adjustment reference	R/W	Setting this bit enables edge adjustment on the SR2 falling edge, t_{F6}.
4	t_{F6} refers to t_S or $t_S/2$	R/W	0 = adjustment refers to $t_S/2$. 1 = adjustment refers to t_S.
3	t_{R5} adjustment reference	R/W	Setting this bit enables edge adjustment on the SR1 rising edge, t_{R5}.
2	t_{R5} refers to t_S or $t_S/2$	R/W	0 = adjustment refers to $t_S/2$. 1 = adjustment refers to t_S.
1	t_{F5} adjustment reference	R/W	Setting this bit enables edge adjustment on the SR1 falling edge, t_{F5}.
0	t_{F5} refers to t_S or $t_S/2$	R/W	0 = adjustment refers to $t_S/2$. 1 = adjustment refers to t_S.

Register 0xFE70 to Register 0xFE9F—Reserved

All of these registers and their bits are reserved. There are no register tables available for Register 0xFE70 to Register 0xFE9F.

MANUFACTURER SPECIFIC FAULT FLAG REGISTERS

Table 196. Register 0xFEA0—Flag Register 1 and Register 0xFEA3—Latched Flag Register 1 (1 = Fault, 0 = Normal Operation)

Bits	Bit Name/Function	R/W	Description	Corresponding Registers[1]	Action[1]
7	CHIP_PASSWORD_UNLOCKED	R	Chip password is unlocked.	N/A	None
6	$\overline{\text{PGOOD}}$	R	At least one of the following flags has been set: VOUT_OV_ FAULT, VOUT_UV_FAULT, IOUT_OC_FAULT, OT_FAULT, OT_WARNING, VIN_UV_FAULT, IIN_OC_FAST_ FAULT, SR_RC_FAULT, POWER_OFF, CRC_FAULT, SOFT_START_FILTER, or $\overline{\text{POWER_GOOD}}$. Some of the flags are maskable according to Register 0xFE0D.	0xFE0D and 0xFE0E	$\overline{\text{PG}}$/$\overline{\text{ALT}}$ pin set low
5	IIN_OC_FAST_FAULT	R	An input overcurrent fast fault is triggered.	0xFE1F	Programmable
4	Reserved	R	Reserved.	N/A	N/A
3	CS3_OC_FAULT	R	A CS3 overcurrent fault is triggered.	0xFE6A	Programmable
2	Reserved	R	Reserved.	N/A	N/A
1	Reserved	R	Reserved.	N/A	N/A
0	VDD_OV	R	V_{DD} is above the OVLO limit. The I^2C/PMBus interface remains functional, but power conversion stops.	0xFE05	Programmable

[1] N/A means not applicable.

Table 197. Register 0xFEA1—Flag Register 2 and Register 0xFEA4—Latched Flag Register 2 (1 = Fault, 0 = Normal Operation)

Bits	Bit Name/Function	R/W	Description	Corresponding Register[1]	Action[1]
7	Reserved	R	Reserved.	N/A	N/A
6	Reserved	R	Reserved.	N/A	N/A
5	SR_RC_FAULT	R	CS2 reverse current drops below SR_RC_FAULT_LIMIT.	0xFE1A	Programmable
4	CONSTANT_CURRENT	R	Constant current mode is in use.	0xFE1A, 0xFE1B	Programmable
3	LIGHT_LOAD	R	Light load mode (CS2 current is below the light load threshold).	0xFE19	Programmable
2	VIN_UV_FAULT	R	V_{IN} reading is below the VIN_OFF limit.	0xFE29	Programmable
1	SYNC_LOCKED	R	Cycle-by-cycle synchronization starts.	N/A	Programmable
0	FLAGIN	R	FLAGIN flag (SYNI/FLGI pin) is set.	0xFE12	Programmable

[1] N/A means not applicable.

Table 198. Register 0xFEA2—Flag Register 3 and Register 0xFEA5—Latched Flag Register 3 (1 = Fault, 0 = Normal Operation)

Bits	Bit Name/Function	R/W	Description	Corresponding Register[1]	Action[1]
7	CHIP_ID	R	In the ADP1052, this bit is 1.	N/A	N/A
6	PULSE_SKIPPIING	R	Pulse skipping mode is in use.	0xFE69	Programmable
5	ADAPTIVE_DEAD_TIME	R	Adaptive dead time compensation is in use.	0xFE66	Programmable
4	DEEP_LIGHT_LOAD	R	Deep light load mode (CS2 current is below the deep light load threshold).	0xFE1B	Programmable
3	EEPROM_UNLOCKED	R	The EEPROM is unlocked.	N/A	None
2	CRC_FAULT	R	The EEPROM contents that were downloaded are incorrect.	N/A	Immediate shutdown
1	Modulation	R	Digital compensator output is at its minimum or maximum limit.	N/A	None
0	SOFT_START_FILTER	R	The soft start filter is in use.	N/A	None

[1] N/A means not applicable.

Table 199. Register 0xFEA6—First Flag ID

Bits	Bit Name/Function	R/W	Description				
[7:4]	Previous first flag ID	R	These bits return the flag fault ID of the flag that caused the previous shutdown of the power supply. This previous shutdown occurred before the shutdown caused by the fault identified in Bits[3:0].				
			Bit 3	**Bit 2**	**Bit 1**	**Bit 0**	**First Flag**
			0	0	0	0	No flag.
			0	0	0	1	IIN_OC_FAST_FAULT.
			0	0	1	0	IOUT_OC_FAULT.
			0	0	1	1	CS3_OC_FAULT.
			0	1	0	0	VOUT_OV_FAULT.
			0	1	0	1	VOUT_UV_FAULT.
			0	1	1	0	VIN_UV_FAULT.
			0	1	1	1	FLAGIN.
			1	0	0	0	SR_RC_FAULT.
			1	0	0	1	OT_FAULT.
			1	0	1	0	Reserved.
			1	0	1	1	Reserved.
			1	1	0	0	Reserved.
			1	1	0	1	Reserved.
			1	1	1	0	Reserved.
			1	1	1	1	Reserved.
[3:0]	Current first flag ID	R	These bits return the flag fault ID of the fault that caused the shutdown of the power supply.				
			Bit 3	**Bit 2**	**Bit 1**	**Bit 0**	**First Flag**
			0	0	0	0	No flag.
			0	0	0	1	IIN_OC_FAST_FAULT.
			0	0	1	0	IOUT_OC_FAULT.
			0	0	1	1	CS3_OC_FAULT.
			0	1	0	0	VOUT_OV_FAULT.
			0	1	0	1	VOUT_UV_FAULT.
			0	1	1	0	VIN_UV_FAULT
			0	1	1	1	FLAGIN.
			1	0	0	0	SR_RC_FAULT.
			1	0	0	1	OT_FAULT.
			1	0	1	0	Reserved.
			1	0	1	1	Reserved.
			1	1	0	0	Reserved.
			1	1	0	1	Reserved.
			1	1	1	0	Reserved.
			1	1	1	1	Reserved.

MANUFACTURER SPECIFIC VALUE READING REGISTERS

Table 200. Register 0xFEA7—CS1 Value

Bits	Bit Name/Function	R/W	Description
[15:4]	CS1 current value	R	This register contains 12-bit CS1 current information. The range of the CS1 input pin is from 0 V to 1.6 V. Each LSB corresponds to 390.625 µV. At 0 V input, the value in this register is 0 decimal. The nominal voltage at this pin is 1 V. At 1 V input, the value in these bits is 0xA00 (2560 decimal). The reading is equivalent to the READ_IIN command.
[3:0]	Reserved	R	Reserved.

Table 201. Register 0xFEA8—CS2 Value

Bits	Bit Name/Function	R/W	Description
[15:4]	CS2 voltage value	R	This register contains the 12-bit CS2 output current information. The range of the CS2± input pins is from 0 mV to 120 mV. Each LSB corresponds to 29.297 µV. At 0 V input, the value in this register is 0. The reading is equivalent to the READ_IOUT command.
[3:0]	Reserved	R	Reserved.

Table 202. Register 0xFEA9—CS3 Value

Bits	Bit Name/Function	Type	Description
[15:4]	CS3 voltage value	R	This register contains 12-bit CS3 current information calculated by using the CS1 reading and duty cycle information. Each LSB corresponds to 4× the CS1 LSB in Register 0xFEA7, multiplied by the turn ratio of the main transformer, n ($n = N_{PRI}/N_{SEC}$).
[3:0]	Reserved	R	Reserved.

Table 203. Register 0xFEAA—VS Value

Bits	Bit Name/Function	R/W	Description
[15:4]	VS voltage value	R	This register contains the 12-bit VS± output voltage information. The range of the VS± input pins is from 0 V to 1.6 V. Each LSB corresponds to 390.625 µV. At 0 V input, the value in this register is 0. The nominal voltage at the VS+ and VS− pins is 1 V. At 1 V input, the value in these bits of this register is 0xA00 (2560 decimal). The reading is equivalent to the READ_VOUT command.
[3:0]	Reserved	R	Reserved.

Table 204. Register 0xFEAB—RTD Value

Bits	Bit Name/Function	R/W	Description
[15:4]	RTD temperature value	R	These bits contain the 12-bit RTD temperature information, as determined from the RTD pin. The range of the RTD input pin is from 0 V to 1.6 V. Each LSB corresponds to 390.625 µV. At 0 V input, the value in this register is 0. The nominal voltage at the RTD pin is 1 V. At 1 V input, the value in these bits is 0xA00 (2560 decimal).
[3:0]	Reserved	R	Reserved.

Table 205. Register 0xFEAC—VF Value

Bits	Bit Name/Function	R/W	Description
[15:5]	VF voltage value	R	This register contains the 11-bit VF voltage information. The range of the VF input pin is from 0 V to 1.6 V. Each LSB corresponds to 781.25 µV. At 0 V input, the value in this register is 0. The nominal voltage at the VF pin is 1 V. At 1 V input, the value in these bits is 0x500 (1280 decimal). The reading is equivalent to the READ_VIN command.
[4:0]	Reserved	R	Reserved.

Table 206. Register 0xFEAD—Duty Cycle Value

Bits	Bit Name/Function	R/W	Description
[15:12]	Reserved	R	Reserved.
[11:0]	Duty cycle value	R	This register contains the 12-bit duty cycle information. Each LSB corresponds to 0.0244% duty cycle. At 100% duty cycle, the value in these bits is 0xFFF (4095 decimal).

Table 207. Register 0xFEAE—Input Power Value

Bits	Bit Name/Function	R/W	Description
[15:0]	Input power value	R	This register contains the 16-bit input power information. This value is the product of the input voltage value (VF) and input current value (CS1). The product of two 12-bit values is a 24-bit value, and the eight LSBs are discarded.

Table 208. Register 0xFEAF—Output Power Value

Bits	Bit Name/Function	R/W	Description
[15:0]	Output power value	R	This register contains the 16-bit output power information. This value is the product of the output voltage value (VS) and the output current reading (CS2). The product of two 12-bit values is a 24-bit value, and the eight LSBs are discarded.

OUTLINE DIMENSIONS

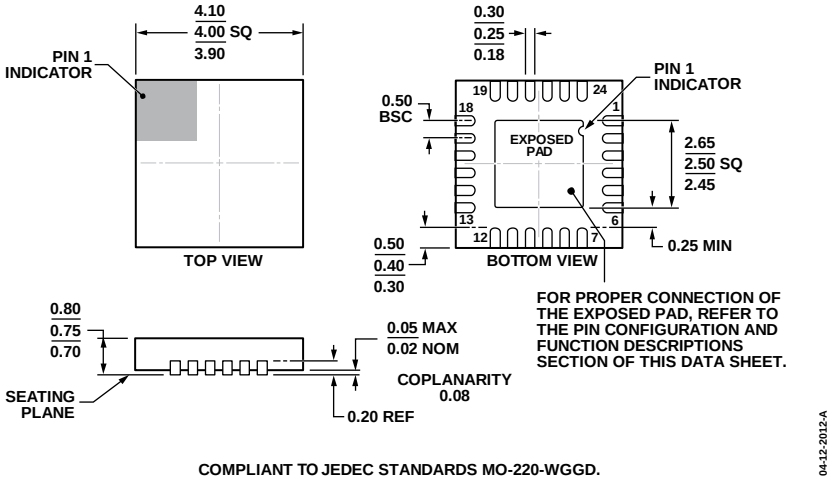

Figure 69. 24-Lead Lead Frame Chip Scale Package [LFCSP]
4 mm × 4 mm Body and 0.75 mm Package Height
(CP-24-15)
Dimensions shown in millimeters

ORDERING GUIDE

Model[1]	Temperature Range	Package Description	Package Option
ADP1052ACPZ-RL	−40°C to +125°C	24-Lead Lead Frame Chip Scale Package [LFCSP]	CP-24-15
ADP1052ACPZ-R7	−40°C to +125°C	24-Lead Lead Frame Chip Scale Package [LFCSP]	CP-24-15
ADP1052DC1-EVALZ		ADP1052 Daughter Card	

[1] Z = RoHS Compliant Part.

I²C refers to a communications protocol originally developed by Philips Semiconductors (now NXP Semiconductors).

©2015–2017 Analog Devices, Inc. All rights reserved. Trademarks and registered trademarks are the property of their respective owners.
D12520-0-6/17(B)