Hot Swap Controller and Digital Power and Energy Monitoring with PMBus Interface

Data Sheet

ADM1276

FEATURES

Controls supply voltages from 2 V to 20 V
370 ns response time to short circuit
Resistor-programmable 5 mV to 25 mV current limit
±1% accurate, 12-bit ADC for current, V_{IN}/V_{OUT} readback
Charge pumped gate drive for multiple external N-channel FETs
High gate drive voltage to ensure lowest R_{DSON}
Foldback for tighter FET SOA protection
Automatic retry or latch-off on current fault
Programmable current-limit timer for SOA
Programmable, multifunction GPO
Power-good status output
Analog UV and OV protection
ENABLE pin
Reports power and energy consumption over time
Peak detect registers for current and voltage
PMBus fast mode compliant interface
20-lead LFCSP

APPLICATIONS

Power monitoring and control/power budgeting
Central office equipment
Telecommunication and data communication equipment
PCs/servers

FUNCTIONAL BLOCK DIAGRAM

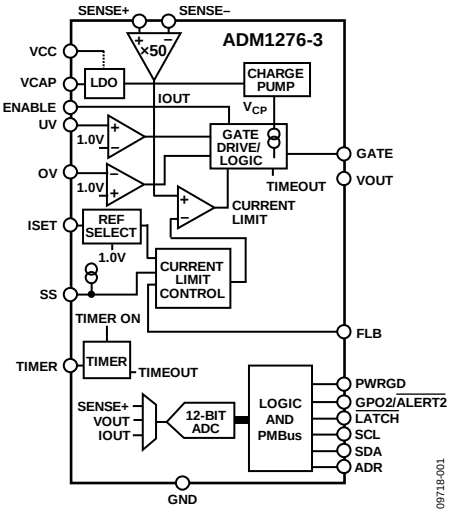

Figure 1.

GENERAL DESCRIPTION

The ADM1276 is a hot swap controller that allows a circuit board to be removed from or inserted into a live backplane. It also features current and voltage readback via an integrated 12-bit analog-to-digital converter (ADC), accessed using a PMBus™ interface.

The load current is measured using an internal current sense amplifier that measures the voltage across a sense resistor in the power path via the SENSE+ and SENSE– pins. A default limit of 20 mV is set, but this limit can be adjusted, if required, using a resistor divider network from the internal reference voltage to the ISET pin.

The ADM1276 limits the current through the sense resistor by controlling the gate voltage of an external N-channel FET in the power path, via the GATE pin. The sense voltage—and, therefore, the load current—is maintained below the preset maximum. The ADM1276 protects the external FET by limiting the time that the FET remains on while the current is at its maximum value. This current-limit time is set by the choice of capacitor connected to the TIMER pin. In addition, a foldback resistor network can be used to actively lower the current limit as the voltage across the FET is increased. This helps to maintain constant power in the FET and allows the safe operating area (SOA) to be adhered to in an effective manner.

In case of a short-circuit event, a fast internal overcurrent detector responds within 370 ns and signals the gate to shut down. A 1500 mA pull-down device ensures a fast FET response. The ADM1276 features overvoltage (OV) and undervoltage (UV) protection, programmed using external resistor dividers on the UV and OV pins. A PWRGD signal can be used to detect when the output supply is valid, using the FLB pin to monitor the output. A GPO pin can be configured as an output signal that can be asserted when a programmed current or voltage level is reached.

The 12-bit ADC can measure the current in the sense resistor, as well as the supply voltage on the SENSE+ pin or the output voltage. A PMBus interface allows a controller to read current and voltage data from the ADC. Measurements can be initiated by a PMBus command. Alternatively, the ADC can run continuously, and the user can read the latest conversion data whenever required. As many as four unique PMBus addresses can be selected, depending on the way that the ADR pin is connected.

The ADM1276 is available in a 20-lead LFCSP with a $\overline{\text{LATCH}}$ pin that can be configured for automatic retry or latch-off when an overcurrent fault occurs.

Rev. C **Document Feedback**
Information furnished by Analog Devices is believed to be accurate and reliable. However, no responsibility is assumed by Analog Devices for its use, nor for any infringements of patents or other rights of third parties that may result from its use. Specifications subject to change without notice. No license is granted by implication or otherwise under any patent or patent rights of Analog Devices. Trademarks and registered trademarks are the property of their respective owners.

One Technology Way, P.O. Box 9106, Norwood, MA 02062-9106, U.S.A.
Tel: 781.329.4700 **©2011–2013 Analog Devices, Inc. All rights reserved.**
Technical Support **www.analog.com**

TABLE OF CONTENTS

Features ... 1
Applications ... 1
General Description ... 1
Functional Block Diagram ... 1
Revision History ... 3
Specifications ... 4
Serial Bus Timing Characteristics ... 7
Absolute Maximum Ratings ... 8
Thermal Characteristics ... 8
ESD Caution ... 8
Pin Configuration and Function Descriptions ... 9
Typical Performance Characteristics ... 11
Typical Application Circuit ... 17
Theory of Operation ... 18
Powering the ADM1276 ... 18
Current Sense Inputs ... 18
Current-Limit Reference ... 19
Setting the Current Limit (ISET) ... 19
Soft Start ... 20
Foldback ... 20
Timer ... 21
Hot Swap Retry Duty Cycle ... 21
FET Gate Drive Clamps ... 21
Fast Response to Severe Overcurrent ... 22
Undervoltage and Overvoltage ... 22
ENABLE Input ... 22
Power Good ... 22
VOUT Measurement ... 23
FET Health ... 23
Power Monitor ... 23
PMBus Interface ... 24
Device Addressing ... 24
SMBus Protocol Usage ... 24
Packet Error Checking ... 24
SMBus Message Formats ... 25
Group Commands ... 26
Hot Swap Control Commands ... 27
ADM1276 Information Commands ... 27
Status Commands ... 27
GPO and Alert Pin Setup Commands ... 28
Power Monitor Commands ... 28
Warning Limit Setup Commands ... 29
PMBus Direct Format Conversion ... 30
Voltage and Current Conversion Using LSB Values ... 32
GPO2/$\overline{\text{ALERT2}}$ Pin Behavior ... 33
Faults and Warnings ... 33
Generating an Alert ... 33
Handling/Clearing an Alert ... 33
SMBus Alert Response Address ... 33
Example Use of SMBus Alert Response Address ... 34
PMBus Command Reference ... 35
OPERATION ... 36
CLEAR_FAULTS ... 36
CAPABILITY ... 36
VOUT_OV_WARN_LIMIT ... 36
VOUT_UV_WARN_LIMIT ... 36
IOUT_OC_WARN_LIMIT ... 36
IOUT_WARN2_LIMIT ... 36
VIN_OV_WARN_LIMIT ... 37
VIN_UV_WARN_LIMIT ... 37
PIN_OP_WARN_LIMIT ... 37
STATUS_BYTE ... 37
STATUS_WORD ... 38
STATUS_VOUT ... 38
STATUS_IOUT ... 38
STATUS_INPUT ... 39
STATUS_MFR_SPECIFIC ... 39
READ_EIN ... 40
READ_VIN ... 40
READ_VOUT ... 40
READ_IOUT ... 40
READ_PIN ... 40
PMBUS_REVISION ... 40
MFR_ID ... 41
MFR_MODEL ... 41
MFR_REVISION ... 41
PEAK_IOUT ... 41
PEAK_VIN ... 41
PEAK_VOUT ... 42
PMON_CONTROL ... 42

PMON_CONFIG 42
ALERT2_CONFIG 43
DEVICE_CONFIG 44
POWER_CYCLE 44
PEAK_PIN 44
READ_PIN_EXT 44
READ_EIN_EXT 44
Outline Dimensions 45
Ordering Guide 45

REVISION HISTORY

11/13—Rev. B to Rev. C

Changes to GATE Pin Parameter, Table 1 4

4/13—Rev. A to Rev. B

Added Partial Transactions on I²C Bus Section 24
Changes to Ordering Guide 45

7/11—Rev. 0 to Rev. A

Changes to Features Section 1
Changes to General Description Section 1
Added Endnote 1 to Table 2 8
Changes to Figure 3 10
Changes to Table 5 10
Changes to Power Monitor Section 24
Changes to PMBus Direct Format Conversion Section 31

3/11—Revision 0: Initial Version

SPECIFICATIONS

V_{CC} = 2.95 V to 20 V, $V_{CC} \geq V_{SENSE+}$, V_{SENSE+} = 2 V to 20 V, $V_{SENSE} = (V_{SENSE+} - V_{SENSE-}) = 0$ V, T_A = −40°C to +85°C, unless otherwise noted.

Table 1.

Parameter	Symbol	Min	Typ	Max	Unit	Test Conditions/Comments
POWER SUPPLY						
Operating Voltage Range	V_{CC}	2.95		20	V	
Undervoltage Lockout		2.4		2.7	V	V_{CC} rising
Undervoltage Hysteresis			90	120	mV	
Quiescent Current	I_{CC}			5	mA	GATE on and power monitor running
UV PIN						
Input Current	I_{UV}			100	nA	UV ≤ 3.6 V
UV Threshold	UV_{TH}	0.97	1.0	1.03	V	UV falling
UV Threshold Hysteresis	UV_{HYST}	40	50	60	mV	
UV Glitch Filter	UV_{GF}	2		7	µs	50 mV overdrive
UV Propagation Delay	UV_{PD}		5	8	µs	UV low to GATE pull-down active
OV PIN						
Input Current	I_{OV}			100	nA	OV ≤ 3.6 V
OV Threshold	OV_{TH}	0.97	1.0	1.03	V	OV rising
OV Threshold Hysteresis	OV_{HYST}	50	60	70	mV	
OV Glitch Filter	OV_{GF}	0.5		1.5	µs	50 mV overdrive
OV Propagation Delay	OV_{PD}		1.0	2	µs	OV high to GATE pull-down active
SENSE+ AND SENSE− PINS						
Input Current	I_{SENSEx}			150	µA	Per individual pin; SENSE+, SENSE− = 20 V
Input Imbalance	$I_{\Delta SENSE}$			5	µA	$I_{\Delta SENSE} = (I_{SENSE+}) - (I_{SENSE-})$
VCAP PIN						
Internally Regulated Voltage	V_{VCAP}	2.66	2.7	2.74	V	0 µA ≤ I_{VCAP} ≤ 100 µA; C_{VCAP} = 1 µF
ISET PIN						
Reference Select Threshold	$V_{ISETRSTH}$	1.35	1.5	1.65	V	If $V_{ISET} > V_{ISETRSTH}$, an internal 1 V reference (V_{CLREF}) is used
Internal Reference	V_{CLREF}		1		V	Accuracies included in total sense voltage accuracies
Gain of Current Sense Amplifier	AV_{CSAMP}		50		V/V	Accuracies included in total sense voltage accuracies
Input Current	I_{ISET}			100	nA	$V_{ISET} \leq V_{VCAP}$
GATE PIN						Maximum voltage on the gate is always clamped to ≤31 V
Gate Drive Voltage	ΔV_{GATE}					$\Delta V_{GATE} = V_{GATE} - V_{SENSE+}$
		10	12	14	V	15 V ≥ V_{CC} ≥ 8 V; I_{GATE} ≤ 5 µA
		4.5		13	V	20 V ≥ V_{CC} ≥ 15 V; I_{GATE} ≤ 5 µA
		8		10	V	$V_{SENSE+} = V_{CC}$ = 5 V; I_{GATE} ≤ 5 µA
		4.5		6	V	$V_{SENSE+} = V_{CC}$ = 2.95 V; I_{GATE} ≤ 1 µA
Gate Pull-Up Current	I_{GATEUP}	−20		−30	µA	V_{GATE} = 0 V
Gate Pull-Down Current	I_{GATEDN}					
Regulation	I_{GATEDN_REG}	45	60	75	µA	$V_{GATE} \geq 2$ V; V_{ISET} = 1.0 V; (SENSE+) − (SENSE−) = 30 mV
Slow	I_{GATEDN_SLOW}	5	10	15	mA	$V_{GATE} \geq 2$ V
Fast	I_{GATEDN_FAST}	750	1500	2000	mA	$V_{GATE} \geq 12$ V; $V_{CC} \geq 12$ V
Gate Holdoff Resistance			20		Ω	V_{CC} = 0 V
HOT SWAP SENSE VOLTAGE						
Hot Swap Sense Voltage Current Limit	$V_{SENSECL}$	19.6	20	20.4	mV	$V_{ISET} > 1.65$ V; $V_{FLB} > 1.12$ V; V_{GATE} = (SENSE+) + 3 V; I_{GATE} = 0 µA; $V_{SS} \geq 2$ V
Foldback Inactive						V_{GATE} = (SENSE+) + 3 V; I_{GATE} = 0 µA; $V_{SS} \geq 2$ V
		24.6	25	25.4	mV	V_{ISET} = 1.25 V; $V_{FLB} > 1.395$ V
		19.6	20	20.4	mV	V_{ISET} = 1.0 V; $V_{FLB} > 1.12$ V
		9.6	10	10.4	mV	V_{ISET} = 0.5 V; $V_{FLB} > 0.57$ V
		4.6	5	5.4	mV	V_{ISET} = 0.25 V; $V_{FLB} > 0.295$ V

Parameter	Symbol	Min	Typ	Max	Unit	Test Conditions/Comments
Foldback Active		3.5	4	4.5	mV	V_{FLB} = 0 V; V_{GATE} = (SENSE+) + 3 V; I_{GATE} = 0 µA; V_{SS} ≥ 1 V
		9.6	10	10.4	mV	V_{ISET} > 1.0 V; V_{FLB} = 0.5 V; V_{GATE} = (SENSE+) + 3 V; I_{GATE} = 0 µA; V_{SS} ≥ 1 V
Circuit Breaker Offset	V_{CBOS}	0.6	0.88	1.12	mV	Circuit breaker trip voltage, $V_{CB} = V_{SENSECL} - V_{CBOS}$
SEVERE OVERCURRENT						
Voltage Threshold	$V_{SENSEOC}$	40		50	mV	V_{ISET} = 1.0 V; V_{FLB} > 1.1 V; V_{SS} ≥ 2 V
		9.5		13.0	mV	V_{ISET} = 0.25 V; V_{FLB} > 1.1 V; V_{SS} ≥ 2 V
Short Glitch Filter Duration		90		200	ns	V_{ISET} > 1.65 V; V_{SENSE} driven from 18 mV to 52 mV; selectable via PMBus
Long Glitch Filter Duration (Default)		530		900	ns	V_{SENSE} driven from 18 mV to 52 mV
Response Time						
With Short Glitch Filter		180		370	ns	2 mV overdrive maximum severe overcurrent threshold
With Long Glitch Filter		645		1020	ns	
SOFT START (SS PIN)						
SS Pull-Up Current	I_{SS}	−12	−10	−8	µA	V_{SS} = 0 V
Default $V_{SENSECL}$ Limit		0.5	1.25	1.8	mV	When V_{SENSE} reaches this level, I_{SS} is enabled, ramping $V_{SENSECL}$; V_{SS} = 0 V
SS Pull-Down Current			100		µA	V_{SS} = 1 V
TIMER PIN						
Timer Pull-Up Current	$I_{TIMERUP}$					
Power-On Reset(POR)	$I_{TIMERUPPOR}$	−2	−3	−4	µA	Initial power-on reset; V_{TIMER} = 0.5 V
Overcurrent (OC) Fault	$I_{TIMERUPFLT}$	−57	−60	−63	µA	Overcurrent fault; 0.2 V ≤ V_{TIMER} ≤ 1 V
Timer Pull-Down Current						
Retry	$I_{TIMERDNRT}$	1.7	2	2.3	µA	After fault when GATE is off; V_{TIMER} = 0.5 V
Hold	$I_{TIMERDNHOLD}$		100		µA	Holds TIMER at 0 V when inactive; V_{TIMER} = 0.5 V
Timer Retry/OC Fault Current Ratio			3.33	3.8	%	Defines the limits of the autoretry duty cycle
Timer High Threshold	V_{TIMERH}	0.98	1.0	1.02	V	
Timer Low Threshold	V_{TIMERL}	0.18	0.2	0.22	V	
FOLDBACK (FLB PIN)						
FLB and PWRGD Threshold	V_{FLBTH}	1.08	1.1	1.12	V	FLB rising; V_{ISET} = 1.0 V
Input Current	I_{FLB}			100	nA	V_{FLB} ≤ 1.0 V; V_{ISET} = 1.25 V
				100	nA	V_{VCAP} ≤ V_{FLB} ≤ 20 V
Hysteresis Current		1.7		2.3	µA	
Internal Hysteresis Voltage		1.9		3.1	mV	Voltage drop across the internal 1.3 kΩ resistor
Power-Good Glitch Filter	$PWRGD_{GF}$	0.3	0.7	1	µs	50 mV overdrive
Minimum Foldback Clamp			200		mV	Accuracies included in total sense voltage accuracies
VOUT PIN						
Input Current				20	µA	VOUT = 20 V
$\overline{\text{LATCH}}$ PIN						
Output Low Voltage	V_{OL_LATCH}			0.4	V	I_{LATCH} = 1 mA
				1.5	V	I_{LATCH} = 5 mA
Leakage Current				100	nA	V_{LATCH} ≤ 2 V; $\overline{\text{LATCH}}$ output high-Z
				1	µA	V_{LATCH} = 20 V; $\overline{\text{LATCH}}$ output high-Z
ENABLE PIN						No internal pull-up present on this pin
Leakage Current				100	nA	V_{GPO2} ≤ 2 V
				1	µA	V_{GPO2} = 20 V
Input High Voltage	V_{IH}	1.1			V	
Input Low Voltage	V_{IL}			0.8	V	

Parameter	Symbol	Min	Typ	Max	Unit	Test Conditions/Comments
GPO2/$\overline{\text{ALERT2}}$ PIN						
Output Low Voltage	V_{OL_GPO2}			0.4	V	I_{GPO2} = 1 mA
				1.5	V	I_{GPO2} = 5 mA
Leakage Current				100	nA	$V_{GPO2} \leq 2$ V; GPO output high-Z
				1	µA	V_{GPO2} = 20 V; GPO output high-Z
PWRGD PIN						
Output Low Voltage	V_{OL_PWRGD}			0.4	V	I_{PWRGD} = 1 mA
				1.5	V	I_{PWRGD} = 5 mA
VCC That Guarantees Valid Output		1			V	I_{SINK} = 100 µA; V_{OL_PWRGD} = 0.4 V
Leakage Current				100	nA	$V_{PWRGD} \leq 2$ V; PWRGD output high-Z
				1	µA	V_{PWRGD} = 20 V; PWRGD output high-Z
CURRENT AND VOLTAGE MONITORING						
Current Sense Absolute Error						25 mV input range; 128 sample averaging (unless otherwise noted)
			±0.2	±0.7	%	V_{SENSE} = 20 mV; V_{SENSE+} = 12 V; T_A = 0°C to 65°C
			±0.08		%	V_{SENSE} = 20 mV; V_{SENSE+} = 12 V; T_A = 25°C
				±1.0	%	V_{SENSE} = 20 mV
			±0.08		%	V_{SENSE} = 20 mV; T_A = 25°C
			±0.2		%	V_{SENSE} = 20 mV; T_A = 0°C to 65°C
				±1.0	%	V_{SENSE} = 20 mV; 16 sample averaging
			±0.08		%	V_{SENSE} = 20 mV; 16 sample averaging; T_A = 25°C
			±0.2		%	V_{SENSE} = 20 mV; 16 sample averaging; T_A = 0°C to 65°C
				±2.8	%	V_{SENSE} = 20 mV; 1 sample averaging
			±0.09		%	V_{SENSE} = 20 mV; 1 sample averaging; T_A = 25°C
			±0.2		%	V_{SENSE} = 20 mV; 1 sample averaging; T_A = 0°C to 65°C
				±0.7	%	V_{SENSE} = 25 mV; V_{SENSE+} = 12 V
			±0.04		%	V_{SENSE} = 25 mV; V_{SENSE+} = 12 V; T_A = 25°C
			±0.15		%	V_{SENSE} = 25 mV; V_{SENSE+} = 12 V; T_A = 0°C to 65°C
				±0.75	%	V_{SENSE} = 20 mV; V_{SENSE+} = 12 V
				±0.8	%	V_{SENSE} = 15 mV; V_{SENSE+} = 12 V
				±1.1	%	V_{SENSE} = 10 mV; V_{SENSE+} = 12 V
				±2.0	%	V_{SENSE} = 5 mV; V_{SENSE+} = 12 V
				±4.3	%	V_{SENSE} = 2.5 mV; V_{SENSE+} = 12 V
SENSE+/VOUT Absolute Error				±1.0	%	Low input range; input voltage ≥ 3 V
				±1.0	%	High input range; input voltage ≥ 10 V
ADC Conversion Time						Includes time for power multiplication
			237	280	µs	1 sample of VIN and IOUT; from command received to valid data in register
			360	426	µs	1 sample of VIN, VOUT, and IOUT; from command received to valid data in register
			3753	4233	µs	16 samples of VIN and IOUT averaged; from command received to valid data in register
			5545	6570	µs	16 samples of VIN, VOUT, and IOUT averaged; from command received to valid data in register
Power Multiplication Time			14		µs	
ADR PIN						
Address Set to 00		0		0.8	V	Connect to GND
Input Current for Address 00		−40	−22		µA	V_{ADR} = 0 V to 0.8 V
Address Set to 01		135	150	165	kΩ	Resistor to GND
Address Set to 10		−1		+1	µA	No connect state; maximum leakage current allowed

Parameter	Symbol	Min	Typ	Max	Unit	Test Conditions/Comments
Address Set to 11		2			V	Connect to VCAP
Input Current for Address 11			3	10	µA	V_{ADR} = 2.0 V to VCAP; must not exceed the maximum allowable current draw from VCAP
SERIAL BUS DIGITAL INPUTS (SDA, SCL)						
Input High Voltage	V_{IH}	1.1			V	
Input Low Voltage	V_{IL}			0.8	V	
Output Low Voltage	V_{OL}			0.4	V	I_{OL} = 4 mA
Input Leakage	$I_{LEAK-PIN}$	−10		+10	µA	
		−5		+5	µA	Device is not powered
Nominal Bus Voltage	V_{DD}	2.7		5.5	V	3 V to 5 V ± 10%
Capacitance for SDA, SCL Pins	C_{PIN}		5		pF	
Input Glitch Filter	t_{SP}	0		50	ns	

SERIAL BUS TIMING CHARACTERISTICS

Table 2.

Parameter	Description	Min	Typ	Max	Unit	Test Conditions/Comments
f_{SCLK}	Clock frequency			400	kHz	
t_{BUF}	Bus free time	1.3			µs	Following the stop condition of a read transaction
		4.7			µs	Following the stop condition of a write transaction
$t_{HD;STA}$	Start hold time	0.6			µs	
$t_{SU;STA}$	Start setup time	0.6			µs	
$t_{SU;STO}$	Stop setup time	0.6			µs	
$t_{HD;DAT}$	SDA hold time	300		900	ns	
$t_{SU;DAT}$	SDA setup time	100			ns	
t_{LOW}	SCL low time	1.3			µs	
t_{HIGH}	SCL high time	0.6			µs	
t_R[1]	SCL, SDA rise time	20		300	ns	
t_F	SCL, SDA fall time	20		300	ns	

[1]Note: $t_R = (V_{IL(MAX)} - 0.15)$ to $(V_{IH3V3} + 0.15)$ and $t_F = 0.9\ V_{DD}$ to $(V_{IL(MAX)} - 0.15)$; where V_{IH3V3} = 2.1 V, and V_{DD} = 3.3 V.

Timing Diagram

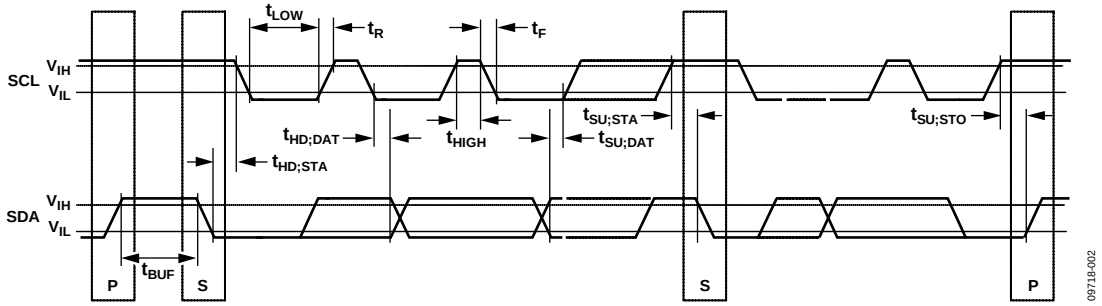

Figure 2. Serial Bus Timing Diagram

ABSOLUTE MAXIMUM RATINGS

Table 3.

Parameter	Rating
VCC Pin	−0.3 V to +25 V
UV Pin	−0.3 V to +4 V
OV Pin	−0.3 V to +4 V
SS Pin	−0.3 V to VCAP + 0.3 V
TIMER Pin	−0.3 V to VCAP + 0.3 V
VCAP Pin	−0.3 V to +4 V
ISET Pin	−0.3 V to VCAP + 0.3 V
$\overline{\text{LATCH}}$ Pin	−0.3 V to +25 V
SCL Pin	−0.3 V to +6.5 V
SDA Pin	−0.3 V to +6.5 V
ADR Pin	−0.3 V to VCAP + 0.3 V
ENABLE Pin	−0.3 V to +25 V
GPO2/$\overline{\text{ALERT2}}$ Pin	−0.3 V to +25 V
PWRGD Pin	−0.3 V to +25 V
FLB Pin	−0.3 V to +25 V
VOUT Pin	−0.3 V to +25 V
GATE Pin (Internal Supply Only)[1]	−0.3 V to +36 V
SENSE+ Pin	−0.3 V to +25 V
SENSE− Pin	−0.3 V to +25 V
V_{SENSE} ($V_{SENSE+} - V_{SENSE-}$)	±0.3 V
Continuous Current into Any Pin	±10 mA
Storage Temperature Range	−65°C to +125°C
Operating Temperature Range	−40°C to +85°C
Lead Temperature, Soldering (10 sec)	300°C
Junction Temperature	150°C

[1] The GATE pin has internal clamping circuits to prevent the GATE pin voltage from exceeding the maximum ratings of a MOSFET with V_{GSMAX} = 20 V and internal process limits. Applying a voltage source to this pin externally may cause irreversible damage.

Stresses above those listed under Absolute Maximum Ratings may cause permanent damage to the device. This is a stress rating only; functional operation of the device at these or any other conditions above those indicated in the operational section of this specification is not implied. Exposure to absolute maximum rating conditions for extended periods may affect device reliability.

THERMAL CHARACTERISTICS

θ_{JA} is specified for the worst-case conditions, that is, a device soldered in a circuit board for surface-mount packages.

Table 4. Thermal Resistance

Package Type	θ_{JA}	Unit
20-lead LFCSP (CP-20-9)	30.4	°C/W

ESD CAUTION



ESD (electrostatic discharge) sensitive device. Charged devices and circuit boards can discharge without detection. Although this product features patented or proprietary protection circuitry, damage may occur on devices subjected to high energy ESD. Therefore, proper ESD precautions should be taken to avoid performance degradation or loss of functionality.

PIN CONFIGURATION AND FUNCTION DESCRIPTIONS

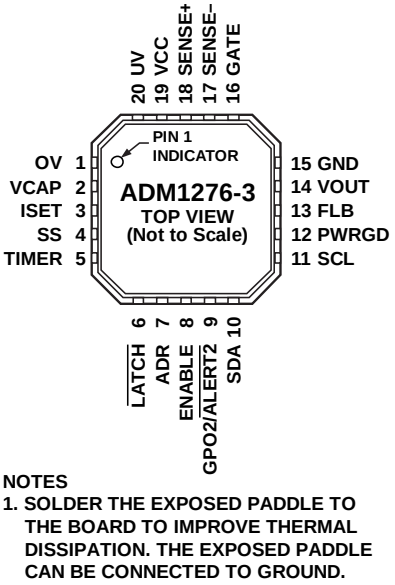

Figure 3. Pin Configuration

Table 5. Pin Function Descriptions

Pin No.	Mnemonic	Description
19	VCC	Positive Supply Input Pin. An undervoltage lockout (UVLO) circuit resets the device when a low supply voltage is detected. GATE is held low when the supply is below UVLO. During normal operation, this pin should remain greater than or equal to SENSE+ to ensure that specifications are adhered to. No sequencing is required.
20	UV	Undervoltage Input Pin. An external resistor divider is used from the supply to this pin to allow an internal comparator to detect whether the supply is under the UV limit.
1	OV	Overvoltage Input Pin. An external resistor divider is used from the supply to this pin to allow an internal comparator to detect whether the supply is above the OV limit.
2	VCAP	Internal Regulated Supply. Place a capacitor with a value of 1 µF or greater on this pin to maintain good accuracy. This pin can be used as a reference to program the ISET pin voltage.
3	ISET	Current Limit. This pin allows the current-limit threshold to be programmed. The default limit is set when this pin is connected directly to VCAP. To achieve a user defined sense voltage, the current limit can be adjusted using a resistor divider from VCAP. An external reference can also be used.
4	SS	Soft Start Pin. A capacitor is used on this pin to set the soft start ramp profile. The voltage on the SS pin controls the current sense voltage limit, which controls the inrush current profile.
5	TIMER	Timer Pin. An external capacitor, C_{TIMER}, sets an initial timing cycle delay and a fault delay. The GATE pin is pulled low when the voltage on the TIMER pin exceeds the upper threshold.
6	$\overline{\text{LATCH}}$	Latch Pin. This pin signals that the device is latching off after an overcurrent fault. The device can be configured for automatic retry after latch-off by connecting this pin directly to the UV or the ENABLE pin.
7	ADR	PMBus Address Pin. This pin can be tied to GND, tied to VCAP, remain floating, or tied low through a resistor to set four different PMBus addresses (see the Device Addressing section).
8	ENABLE	Enable Pin. This pin is a digital logic input. This input must be high to allow the ADM1276 hot swap controller to begin a power-up sequence. If this pin is held low, the ADM1276 is prevented from powering up. There is no internal pull-up on this pin.
9	GPO2/$\overline{\text{ALERT2}}$	General-Purpose Digital Output/Alert. This is a dual function pin. There is no internal pull-up on this pin. The $\overline{\text{ALERT2}}$ function of this pin can be configured to generate an alert signal when one or more fault or warning conditions are detected. At power-up, $\overline{\text{ALERT2}}$ indicates the FET health mode by default.
10	SDA	Serial Data Input/Output Pin. Open-drain input/output. Requires an external resistive pull-up.
11	SCL	Serial Clock Pin. Open-drain input. Requires an external resistive pull-up.
12	PWRGD	Power-Good Signal. Used to indicate that the supply is within tolerance. This signal is based on the voltage present on the FLB pin.
13	FLB	Foldback Pin. A foldback resistor divider is placed from the source of the FET to this pin. Foldback is used to reduce the current limit when the source voltage drops. The foldback feature ensures that the power through the FET is not increased beyond the SOA limits.

Pin No.	Mnemonic	Description
14	VOUT	Output Voltage. This pin is used to read back the output voltage using the internal ADC. A 1 kΩ resistor should be inserted in series between the source of a FET and the VOUT pin.
15	GND	Ground Pin.
16	GATE	Gate Output Pin. This pin is the high-side gate drive of an external N-channel FET. This pin is driven by the FET drive controller, which uses a charge pump to provide a pull-up current to charge the FET gate pin. The FET drive controller regulates to a maximum load current by regulating the GATE pin. GATE is held low when the supply is below UVLO.
17	SENSE−	Negative Current Sense Input Pin. A sense resistor between the SENSE+ pin and the SENSE− pin sets the analog current limit. The hot swap operation of the ADM1276 controls the external FET gate to maintain the sense voltage ($V_{SENSE+} - V_{SENSE-}$). This pin also connects to the FET drain pin.
18	SENSE+	Positive Current Sense Input Pin. This pin connects to the main supply input. A sense resistor between the SENSE+ pin and the SENSE− pin sets the analog current limit. The hot swap operation of the ADM1276 controls the external FET gate to maintain the sense voltage ($V_{SENSE+} - V_{SENSE-}$). This pin is also used to measure the supply input voltage using the ADC.
N/A[1]	EP	Exposed Pad. The exposed pad is located on the underside of the LFCSP package. Solder the exposed pad to the printed circuit board (PCB) to improve thermal dissipation. The exposed pad can be connected to ground.

[1] N/A means not applicable.

TYPICAL PERFORMANCE CHARACTERISTICS

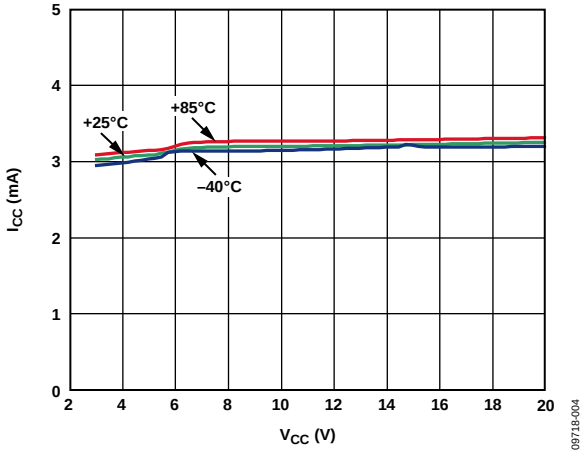

Figure 4. Supply Current (I_{CC}) vs. Supply Voltage (V_{CC})

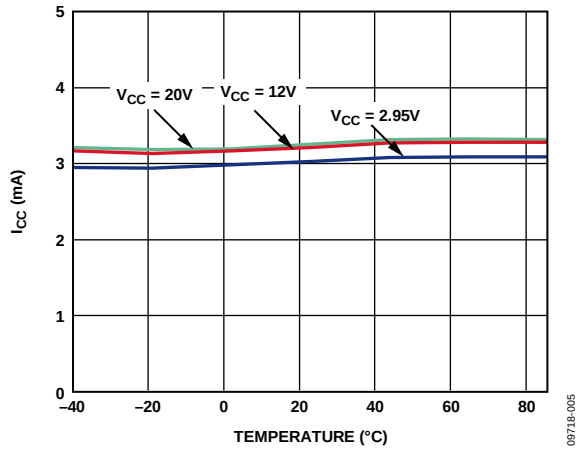

Figure 5. Supply Current (I_{CC}) vs. Temperature

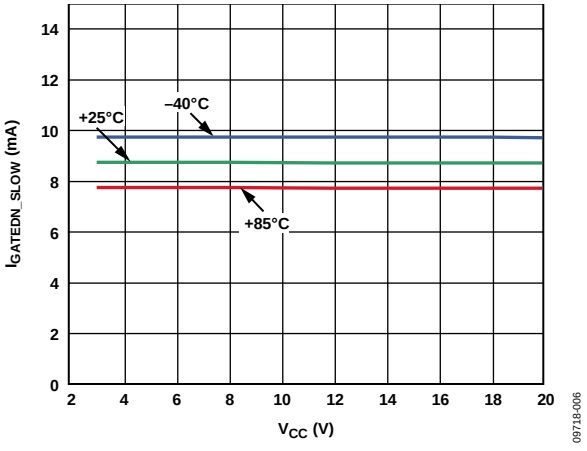

Figure 6. Gate Pull-Down Current (I_{GATEDN_SLOW}) vs. Supply Voltage (V_{CC})

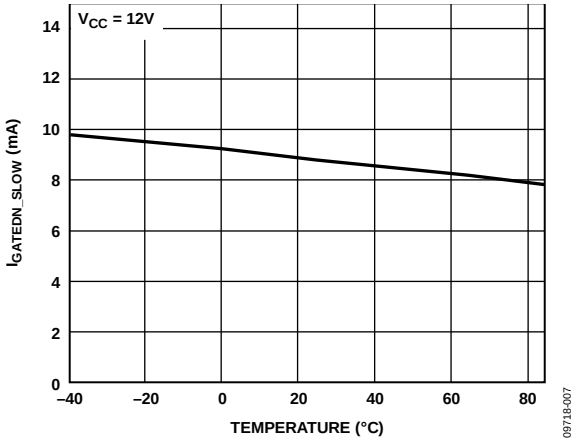

Figure 7. Gate Pull-Down Current (I_{GATEDN_SLOW}) vs. Temperature

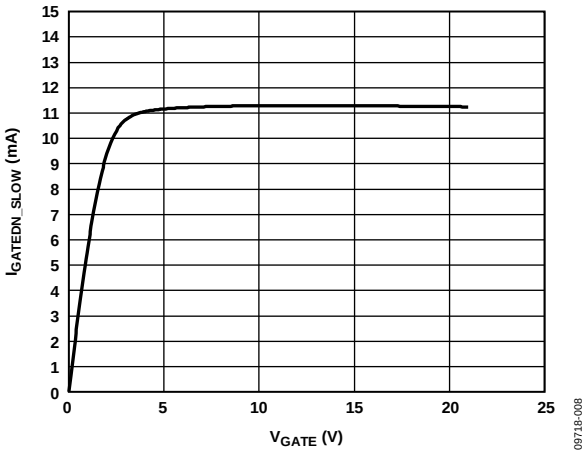

Figure 8. Gate Pull-Down Current (I_{GATEDN_SLOW}) vs. Gate Voltage (V_{GATE})

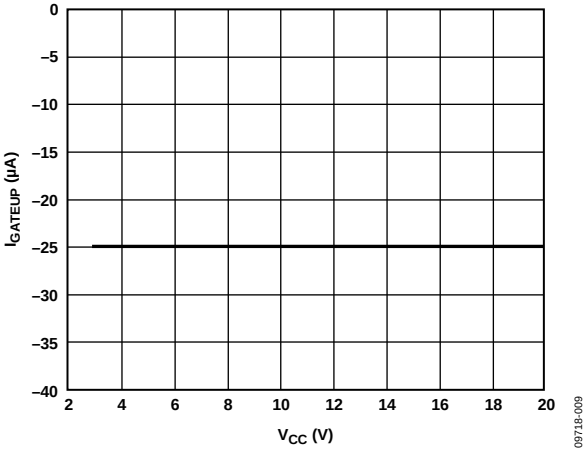

Figure 9. Gate Pull-Up Current (I_{GATEUP}) vs. Supply Voltage (V_{CC})

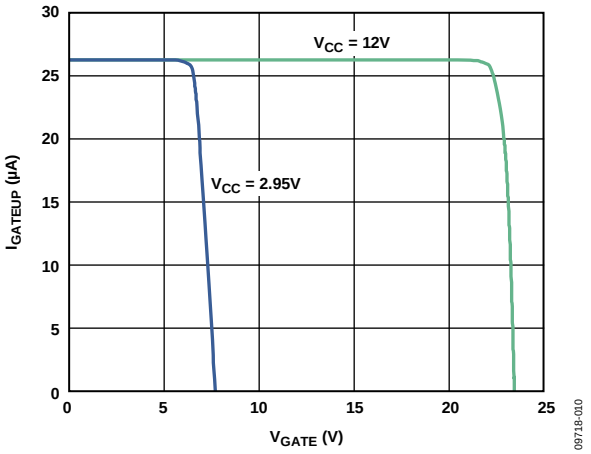

Figure 10. Gate Pull-Up Current (I_{GATEUP}) vs. Gate Voltage (V_{GATE})

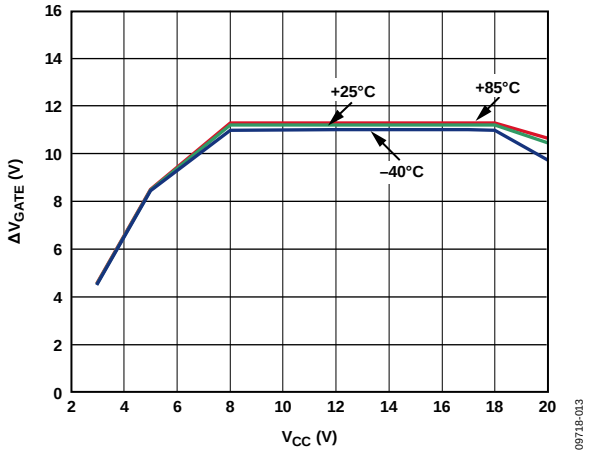

Figure 13. Gate Drive Voltage (ΔV_{GATE}) vs. Supply Voltage (V_{CC}), 5 µA Load

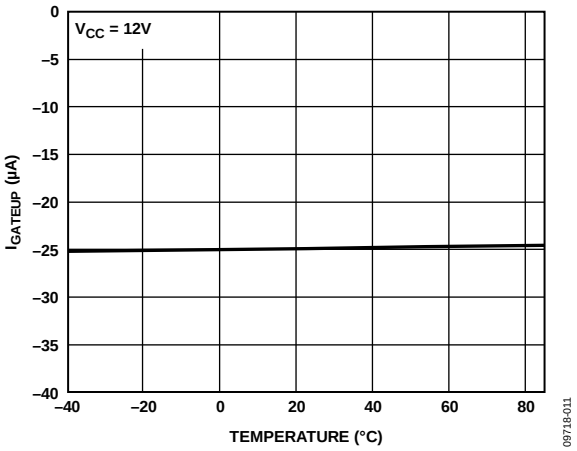

Figure 11. Gate Pull-Up Current (I_{GATEUP}) vs. Temperature

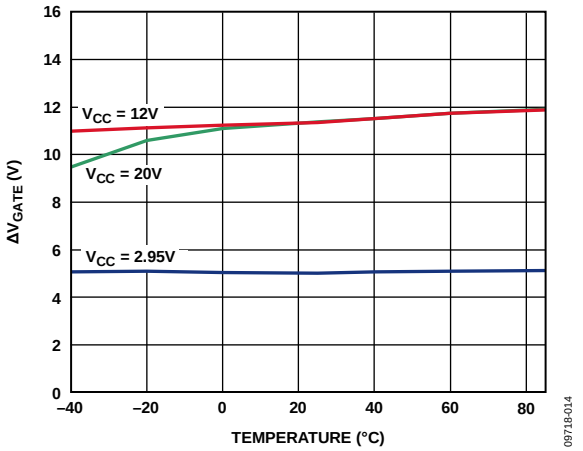

Figure 14. Gate Drive Voltage (ΔV_{GATE}) vs. Temperature, No Load

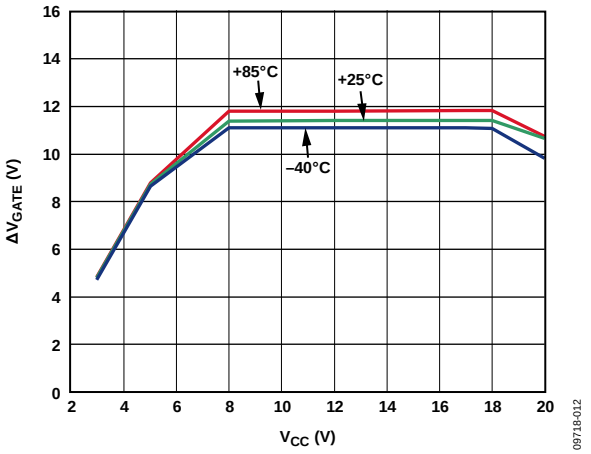

Figure 12. Gate Drive Voltage (ΔV_{GATE}) vs. Supply Voltage (V_{CC}), No Load

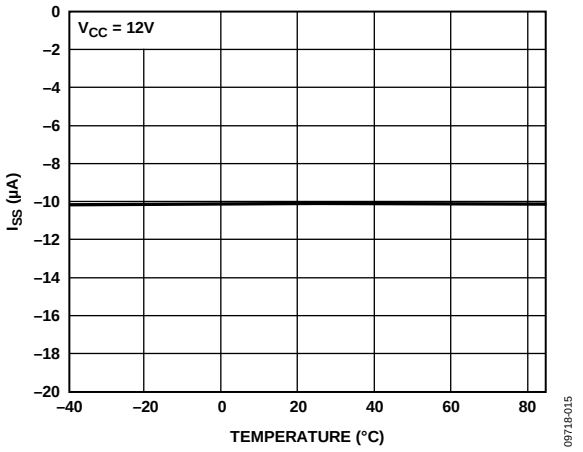

Figure 15. Soft Start Pull-Up Current (I_{SS}) vs. Temperature

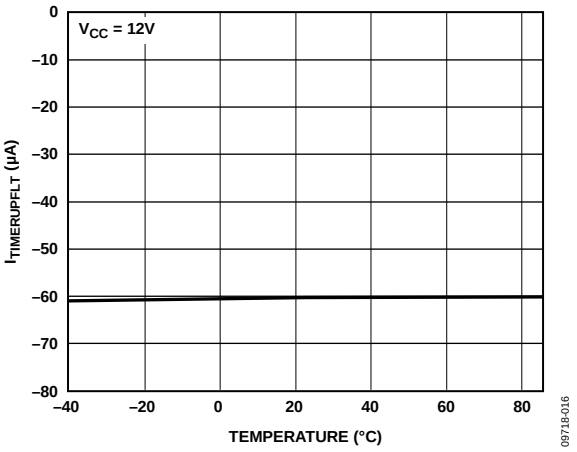

Figure 16. Timer Pull-Up Current, Overcurrent Fault ($I_{TIMERUPFLT}$) vs. Temperature

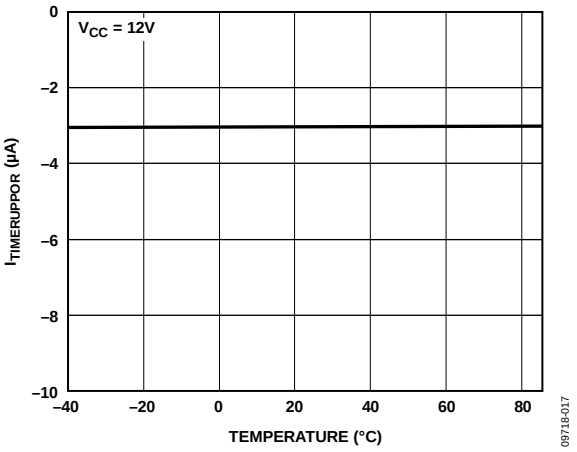

Figure 17. Timer Pull-Up Current, Power-On Reset ($I_{TIMERUPPOR}$) vs. Temperature

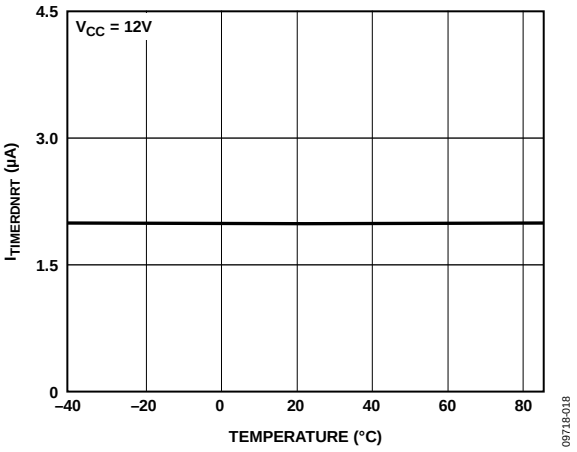

Figure 18. Timer Pull-Down Current, Retry ($I_{TIMERDNRT}$) vs. Temperature

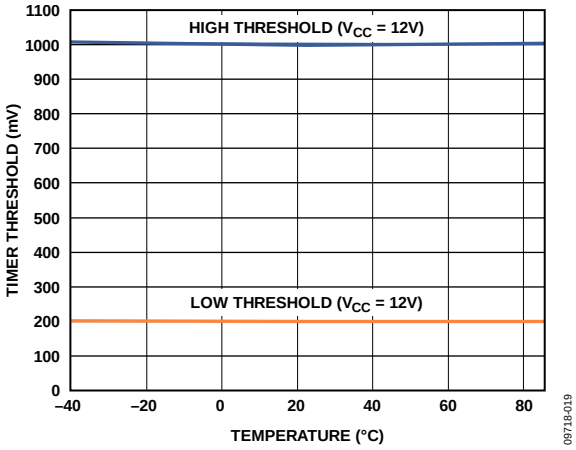

Figure 19. Timer Thresholds vs. Temperature

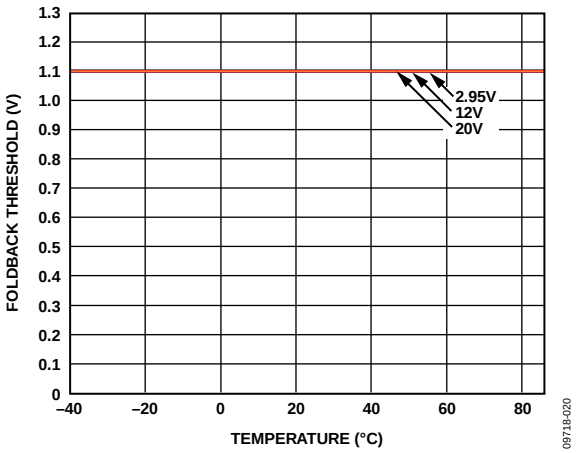

Figure 20. Foldback Threshold vs. Temperature

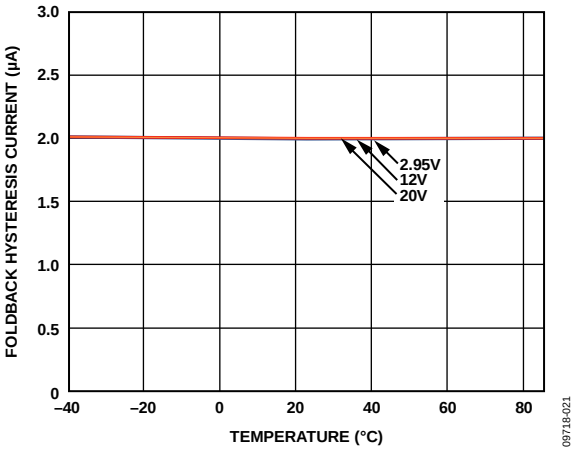

Figure 21. Foldback Hysteresis Current vs. Temperature

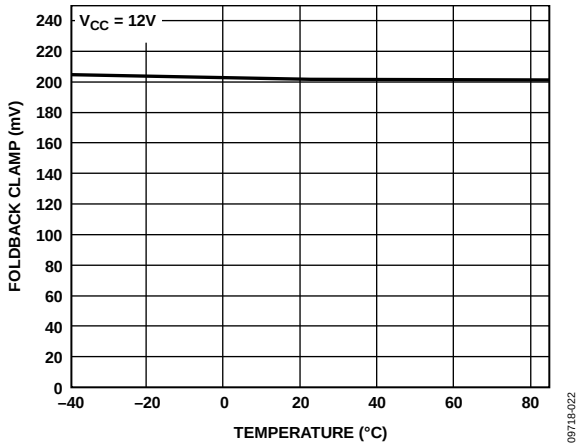

Figure 22. Foldback Clamp vs. Temperature

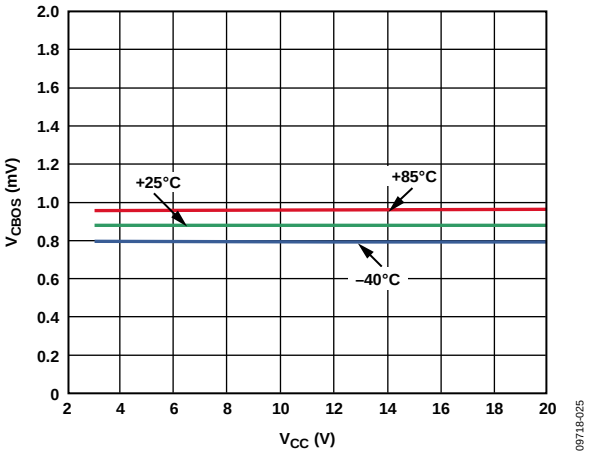

Figure 25. Circuit Breaker Offset (V_{CBOS}) vs. Supply Voltage (V_{CC})

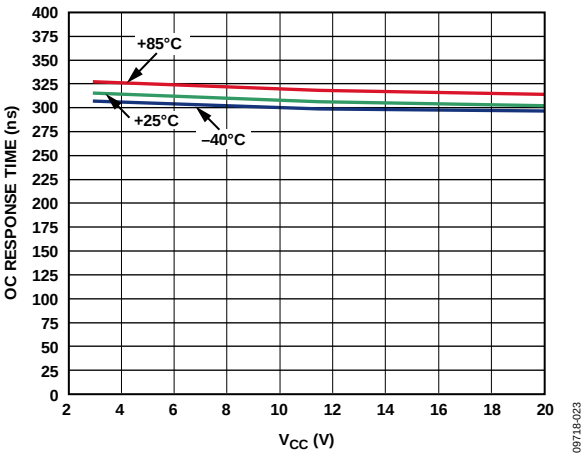

Figure 23. Severe Overcurrent Response Time vs. Supply Voltage (V_{CC}), V_{ISET} = 0.25 V

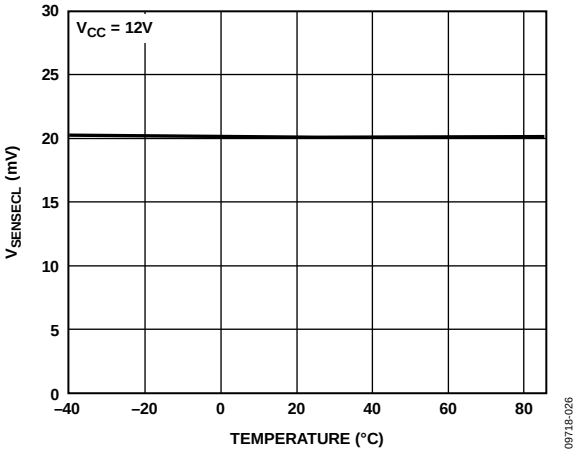

Figure 26. Hot Swap Sense Voltage Current Limit ($V_{SENSECL}$) vs. Temperature

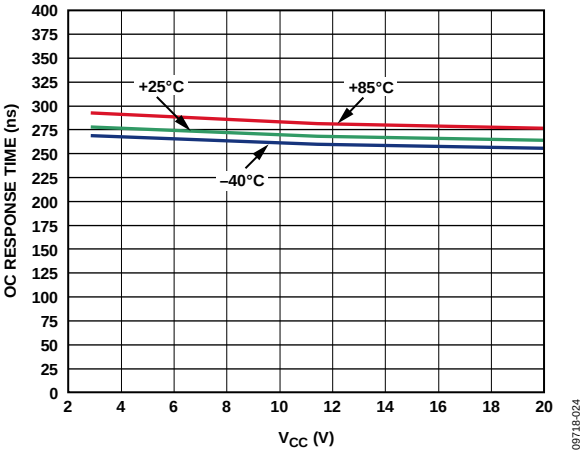

Figure 24. Severe Overcurrent Response Time vs. Supply Voltage (V_{CC}), V_{ISET} = 1 V

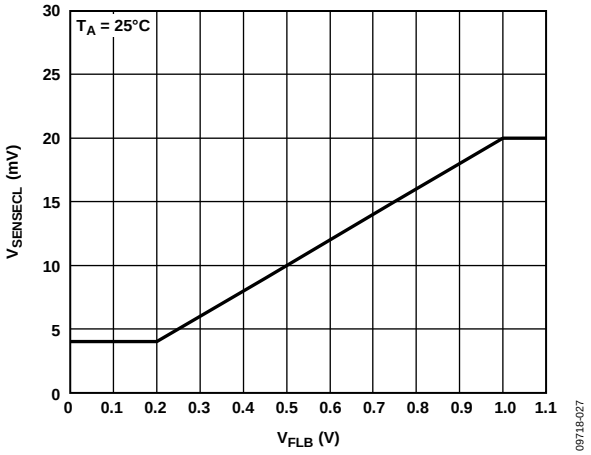

Figure 27. Hot Swap Sense Voltage Current Limit ($V_{SENSECL}$) vs. Foldback Voltage (V_{FLB})

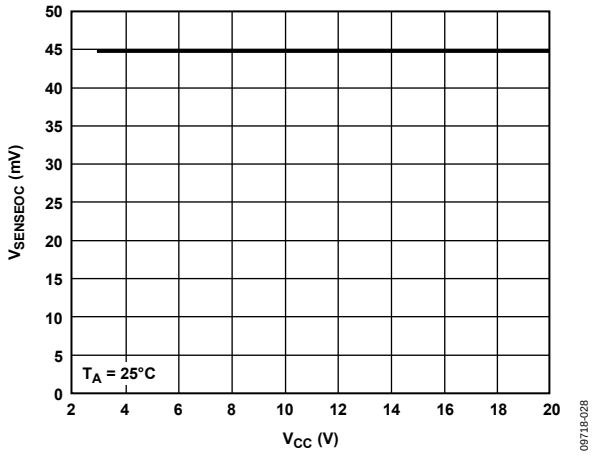

Figure 28. Severe Overcurrent Voltage Threshold ($V_{SENSEOC}$) vs. Supply Voltage (V_{CC}), $V_{ISET} = V_{VCAP}$

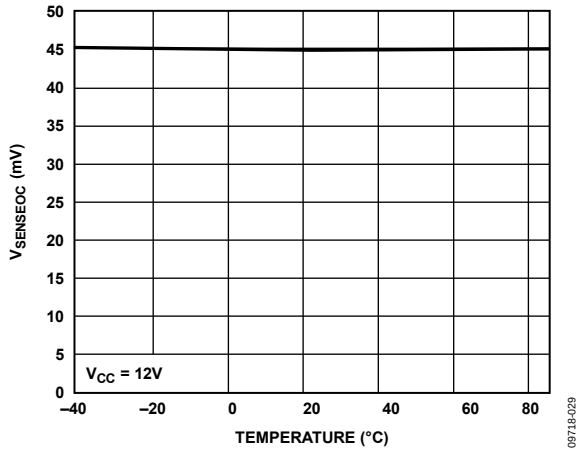

Figure 29. Severe Overcurrent Voltage Threshold ($V_{SENSEOC}$) vs. Temperature, $V_{ISET} = V_{VCAP}$

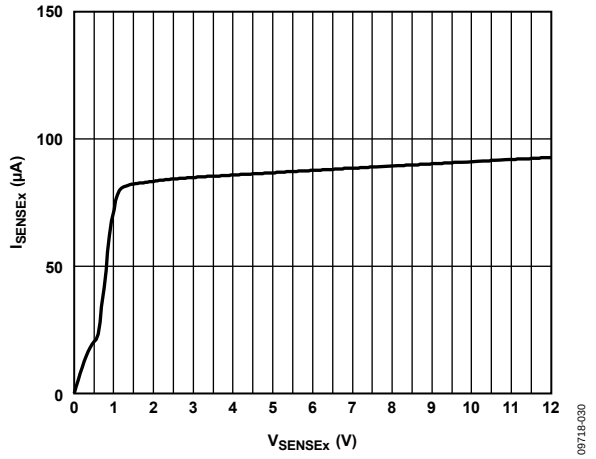

Figure 30. SENSE+/SENSE– Input Current (I_{SENSEx}) vs. Voltage (V_{SENSEx})

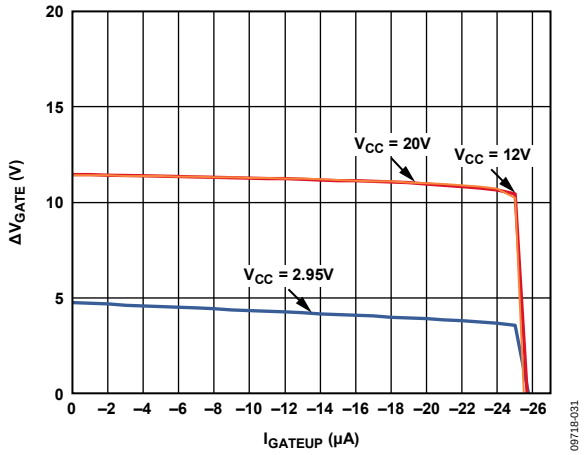

Figure 31. Gate Drive Voltage (ΔV_{GATE}) vs. Gate Pull-Up Current (I_{GATEUP})

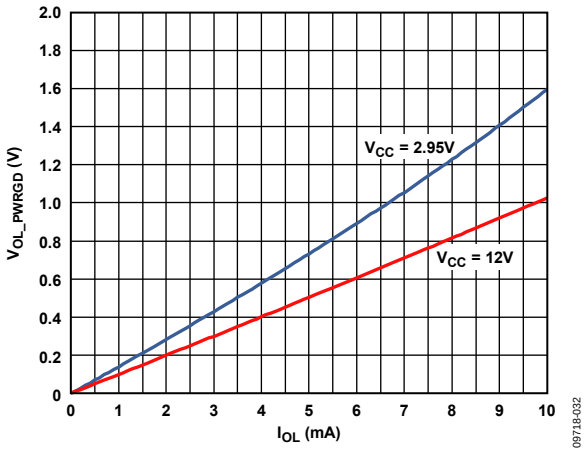

Figure 32. PWRGD Pin, V_{OL} vs. I_{OL}

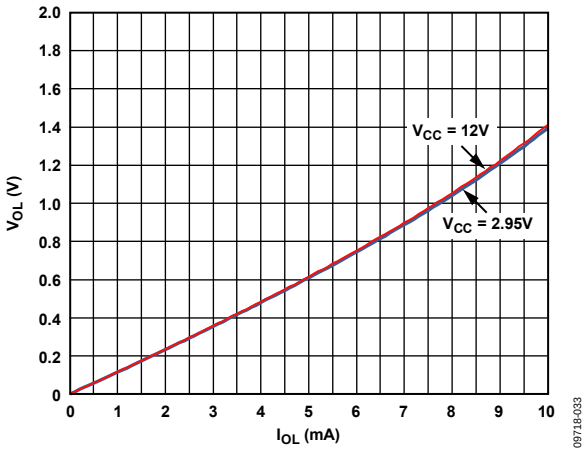

Figure 33. $\overline{LATCH}$ and GPO2/$\overline{ALERT2}$ Digital Outputs, V_{OL} vs. I_{OL}

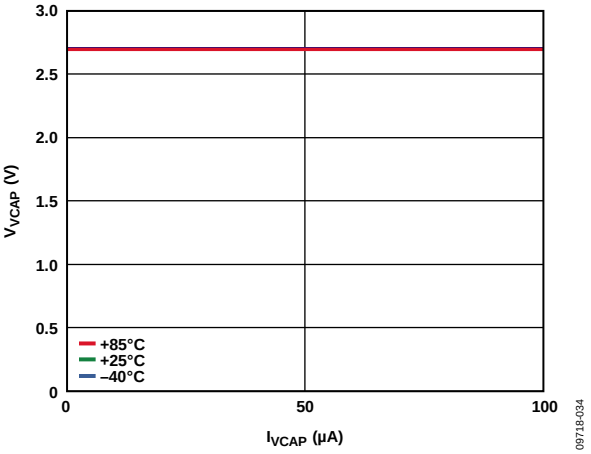

Figure 34. VCAP Voltage (V_{VCAP}) vs. VCAP Load (I_{VCAP})

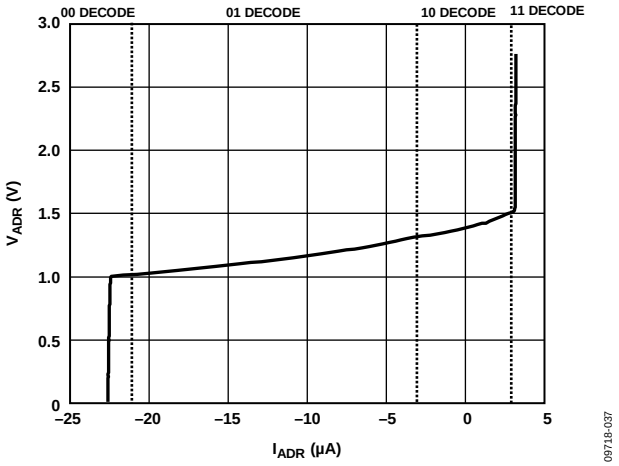

Figure 37. ADR Pin Voltage (V_{ADR}) vs. Current (I_{ADR})

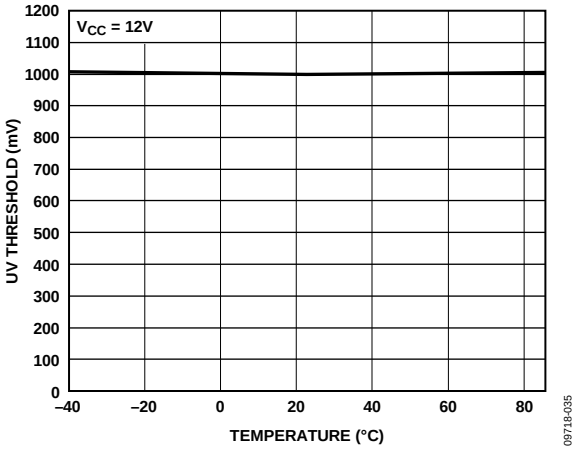

Figure 35. UV Threshold (UV_{TH}) vs. Temperature

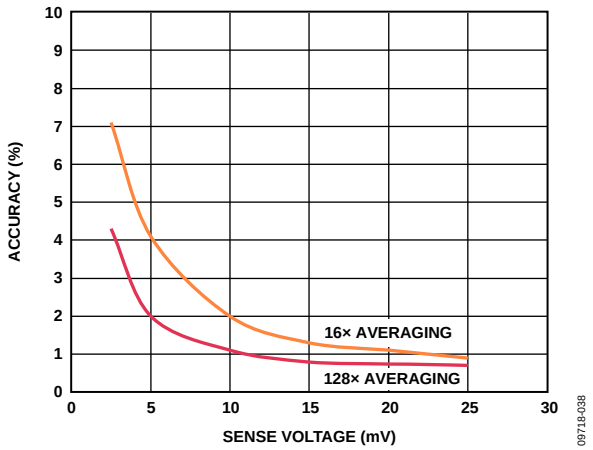

Figure 38. Worst-Case Current Sense Power Monitor Error vs. Current Sense Voltage (V_{SENSE}), 0°C to 65°C, V_{SENSE+} = 12 V

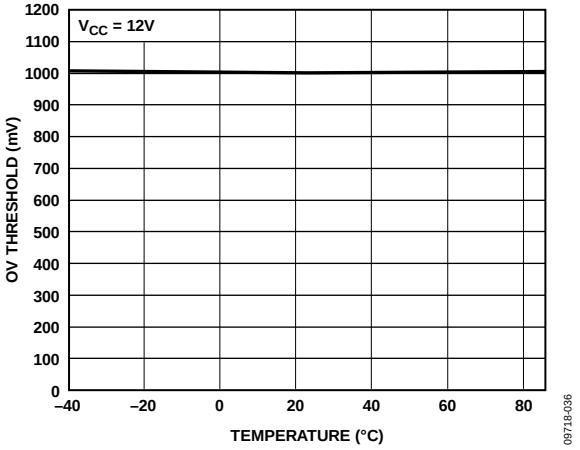

Figure 36. OV Threshold (OV_{TH}) vs. Temperature

TYPICAL APPLICATION CIRCUIT

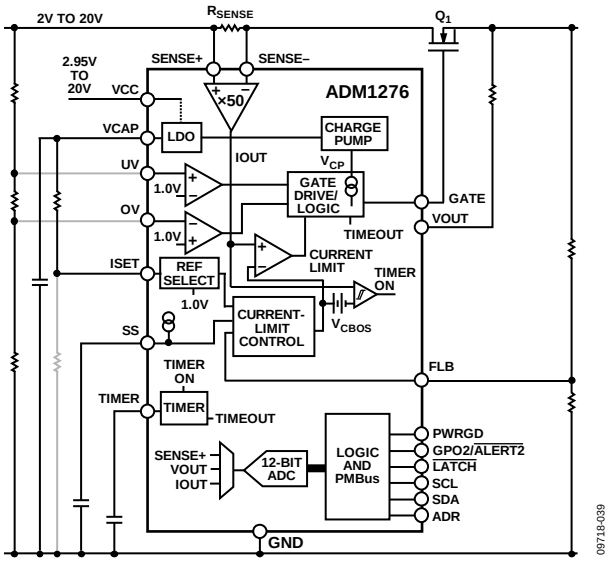

Figure 39. Typical Application Circuit

THEORY OF OPERATION

When circuit boards are inserted into a live backplane, discharged supply bypass capacitors draw large transient currents from the backplane power bus as they charge. These transient currents can cause permanent damage to connector pins, as well as dips on the backplane supply that can reset other boards in the system.

The ADM1276 is designed to control the powering on and off of a system in a controlled manner, allowing a board to be removed from, or inserted into, a live backplane by protecting it from excess currents. The ADM1276 can reside on the backplane or on the removable board.

POWERING THE ADM1276

A supply voltage from 2.95 V to 20 V is required to power the ADM1276 via the VCC pin. The VCC pin provides the majority of the bias current for the device; the remainder of the current needed to control the gate drive and best regulate the V_{GS} voltage is supplied by the SENSE+ pin.

To ensure correct operation of the ADM1276, the voltage on the VCC pin must be greater than or equal to the voltage on the SENSE+ pin. No sequencing of the VCC and SENSE+ rails is necessary. The SENSE+ pin can be as low as 2 V for normal operation provided that a voltage of at least 2.95 V is connected to the VCC pin. In most applications, both the VCC and SENSE+ pins are connected to the same voltage rail, but they are connected via separate traces to prevent accuracy loss in the sense voltage measurement (see Figure 40).

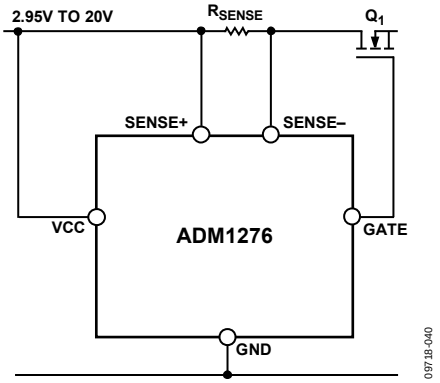

Figure 40. Powering the ADM1276

To protect the ADM1276 from unnecessary resets due to transient supply glitches, an external resistor and capacitor can be added, as shown in Figure 41. Choose the values of these components so as to provide a time constant that can filter any expected glitches. The resistor should, however, be small enough to keep voltage drops due to quiescent current to a minimum. Unless a resistor is used to limit the inrush current, do not place a supply decoupling capacitor on the rail before the FET.

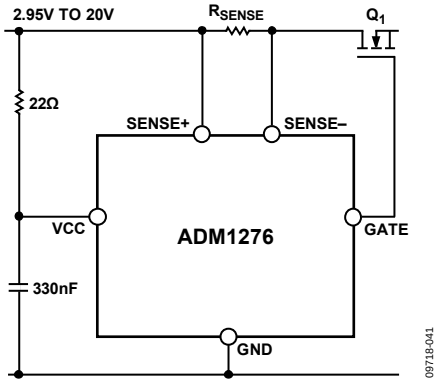

Figure 41. Transient Glitch Protection Using an RC Network

CURRENT SENSE INPUTS

The load current is monitored by measuring the voltage drop across an external sense resistor, R_{SENSE} (see Figure 42). An internal current sense amplifier provides a gain of 50 to the voltage drop detected across R_{SENSE}. The result is compared to an internal reference and used by the hot swap control logic to detect when an overcurrent condition occurs.

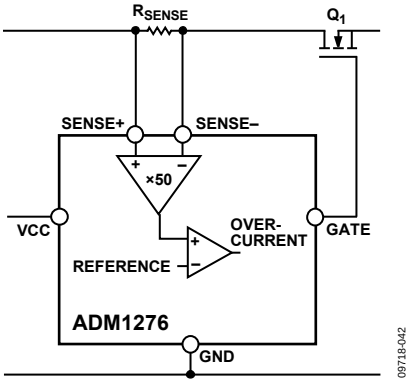

Figure 42. Hot Swap Current Sense Amplifier

The SENSE± inputs may be connected to multiple parallel sense resistors, which can affect the voltage drop detected by the ADM1276. The current flowing through the sense resistors creates an offset, resulting in reduced accuracy.

To achieve better accuracy, the averaging resistors sum the current from the nodes of each sense resistor, as shown in Figure 43. The typical value for the averaging resistors is 10 Ω. The averaging resistors are chosen to balance the input current to both sense pins to within 5 μA. This ensures that the same offset is seen by both sense inputs.

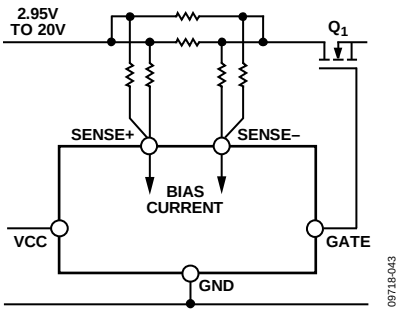

Figure 43. Connection of Multiple Sense Resistors to the SENSE± Pins

CURRENT-LIMIT REFERENCE

The current-limit reference voltage determines the load current level to which the ADM1276 limits the current during an overcurrent event. This reference voltage is compared to the gained-up current sense voltage to determine whether the limit is reached.

An internal current-limit reference selector block continuously compares the ISET, soft start, and foldback voltages to determine which voltage is the lowest at any given time; the lowest voltage is used as the current-limit reference. This ensures that the programmed current limit, ISET, is used in normal operation, and that the soft start and foldback features reduce the current limit when required during startup and/or fault conditions.

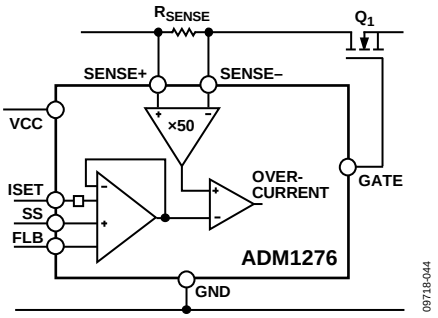

Figure 44. Current-Limit Reference Selection

The foldback and soft start voltages vary during different modes of operation and are, therefore, clamped to minimum levels of 200 mV and 100 mV, respectively, to prevent zero current flow due to the current limit being too low. Figure 45 provides an example of how the soft start, foldback, and ISET voltages interact during startup as the ADM1276 is enhancing the FET and charging the load capacitances. Depending on how the soft start and foldback features are configured, the hand-off point can vary to ensure that the FET is being operated within the correct limits.

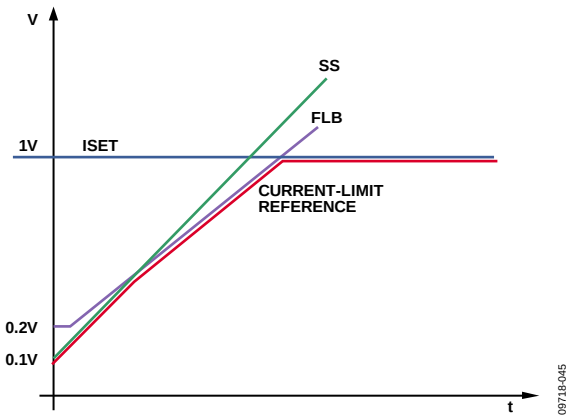

Figure 45. Interaction of Soft Start, Foldback, and ISET Current Limits

SETTING THE CURRENT LIMIT (ISET)

The maximum current limit is partially determined by selecting a sense resistor to match the current sense voltage limit on the controller for the desired load current. However, as currents become larger, the sense resistor requirements become smaller, and resolution can be difficult to achieve when selecting the appropriate sense resistor. The ADM1276 provides an adjustable current sense voltage limit to handle this issue. The device allows the user to program the required current sense voltage limit from 5 mV to 25 mV.

The default value of 20 mV is achieved by connecting the ISET pin directly to the VCAP pin. This configures the device to use an internal 1 V reference, which equates to 20 mV at the sense inputs (see Figure 46).

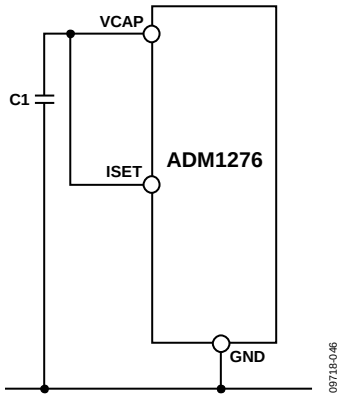

Figure 46. Fixed 20 mV Current Sense Limit

To program the sense voltage from 5 mV to 25 mV, a resistor divider is used to set a reference voltage on the ISET pin (see Figure 47).

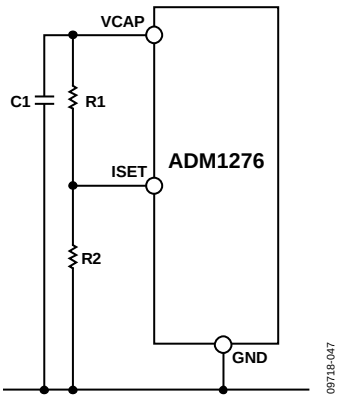

Figure 47. Adjustable 5 mV to 25 mV Current Sense Limit

The VCAP pin has a 2.7 V internal generated voltage that can be used to set a voltage at the ISET pin. Assuming that V_{ISET} equals the voltage on the ISET pin, size the resistor divider to set the ISET voltage as follows:

$$V_{ISET} = V_{SENSE} \times 50$$

where V_{SENSE} is the current sense voltage limit.

The VCAP rail can also be used as the pull-up supply for setting the I²C address. Do not use the VCAP pin for any other purpose. To guarantee accuracy specifications, do not load the VCAP pin by more than 100 µA.

SOFT START

A capacitor connected to the SS pin determines the inrush current profile. Before the FET is enabled, the output voltage of the current-limit reference selector block is clamped at 100 mV. This, in turn, holds the hot swap sense voltage current limit, $V_{SENSECL}$, at approximately 2 mV. When the FET receives a request to turn on, the SS pin is held at ground until the voltage between the SENSE+ and SENSE− pins (V_{SENSE}) reaches the circuit breaker voltage, V_{CB}.

$$V_{CB} = V_{SENSECL} - V_{CBOS}$$

where V_{CBOS} is typically 0.88 mV, making V_{CB} = 1.12 mV.

When the load current generates a sense voltage equal to V_{CB}, a 10 µA current source is enabled, which charges the SS capacitor and results in a linear ramping voltage on the SS pin. The current-limit reference also ramps up accordingly, allowing the regulated load current to ramp up while avoiding sudden transients during power-up. The SS capacitor value is given by

$$C_{SS} = \frac{I_{SS} \times t}{V_{ISET}}$$

where:
I_{SS} = 10 µA.
t = SS ramp time.

For example, a 10 nF capacitor gives a soft start time of 1 ms.

Note that the SS voltage may intersect with the FLB (foldback) voltage, and the current-limit reference may change to follow FLB (see Figure 45). This change has minimal impact on startup because the output voltage rises at a similar rate to the SS voltage.

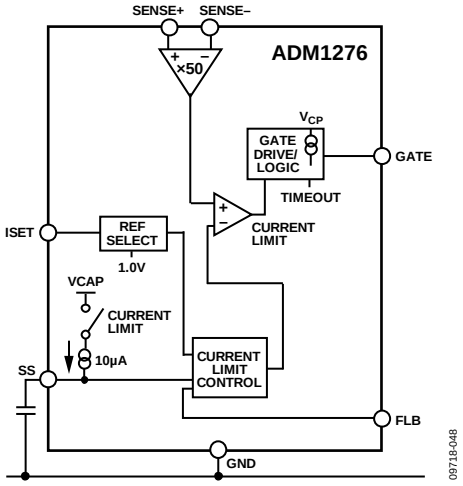

Figure 48. Soft Start

FOLDBACK

Foldback is a method to actively reduce the current limit as the voltage drop across the FET increases. It keeps the power across the FET to a minimum during power-up, overcurrent, or short-circuit events. It also avoids the need to oversize the FET to accommodate worst-case conditions, resulting in board size and cost savings.

The ADM1276 detects the voltage drop across the FET by looking at a resistor divided version of the output voltage. It is assumed that the supply voltage remains constant and within tolerance. The device, therefore, relies on the principle that the drain of the FET is at the maximum expected supply voltage, and that the magnitude of the output voltage is relative to that of the V_{DS} of the FET. Using a resistor divider from the output voltage to the FLB pin, a relationship from V_{OUT}, and thus V_{DS}, to V_{FLB} can be derived.

Design the resistor divider to output a voltage equal to ISET when V_{OUT} falls below the desired level. This should be well below the working tolerance of the supply rail. As V_{OUT} continues to drop, the current-limit reference follows V_{FLB} because it is now the lowest voltage input to the current-limit reference selector block. This results in a reduction of the current limit and, therefore, the regulated load current. To prevent complete current flow restriction, a clamp becomes active when the current-limit reference reaches 200 mV. The current limit cannot drop below this level.

To suit the SOA characteristics of a particular FET, the required minimum current for this clamp varies from design to design. However, the current-limit reference fixes this clamp at 200 mV, which equates to 4 mV at the sense resistor. Therefore, the main ISET voltage can be adjusted to align this clamp to the required percentage current reduction. For example, if ISET equals 0.8 V, the clamp can be set at 25% of the maximum current.

TIMER

The TIMER pin handles several timing functions with an external capacitor, C_{TIMER}. The two comparator thresholds are V_{TIMERL} (0.2 V) and V_{TIMERH} (1 V). There are four timing current sources: a 3 µA pull-up, a 60 µA pull-up, a 2 µA pull-down, and a 100 µA pull-down.

These current and voltage levels, together with the value of C_{TIMER} chosen by the user, determine the initial timing cycle time, the fault current-limit time, and the hot swap retry duty cycle. The TIMER pin capacitor value is determined using the following equation:

$$C_{TIMER} = (t_{ON} \times 60\ \mu A)/V_{TIMERH}$$

where t_{ON} is the time that the FET is allowed to spend in regulation at the set current limit.

The choice of FET is based on matching this time with the SOA requirements of the FET. Foldback can be used to simplify the selection.

When VCC is connected to the backplane supply, the internal supply of the ADM1276 must be charged up. In a very short time, the internal supply is fully charged up and, because the undervoltage lockout (UVLO) voltage is exceeded at VCC, the device emerges from reset. During this first short reset period, the GATE and TIMER pins are both held low.

The ADM1276 then goes through an initial timing cycle. The TIMER pin is pulled high with 3 µA. When the TIMER pin reaches the V_{TIMERH} threshold (1.0 V), the first portion of the initial timing cycle is complete. The 100 µA current source then pulls down the TIMER pin until it reaches V_{TIMERL} (0.2 V). The initial timing cycle duration is related to C_{TIMER} by the following equation:

$$t_{INITIAL} = \frac{V_{TIMERH} \times C_{TIMER}}{3\ \mu A} + \frac{(V_{TIMERH} - V_{TIMERL}) \times C_{TIMER}}{100\ \mu A}$$

For example, a 100 nF capacitor results in a delay of approximately 34 ms. If the UV and OV inputs indicate that the supply is within the defined window of operation when the initial timing cycle terminates, the device is ready to start a hot swap operation.

When the voltage across the sense resistor reaches the circuit breaker trip voltage, V_{CB}, the 60 µA timer pull-up current is activated, and the gate begins to regulate the current at the current limit. This initiates a ramp-up on the TIMER pin. If the sense voltage falls below this circuit breaker trip voltage before the TIMER pin reaches V_{TIMERH}, the 60 µA pull-up is disabled and the 2 µA pull-down is enabled.

The circuit breaker trip voltage is not the same as the hot swap sense voltage current limit. There is a small circuit breaker offset, V_{CBOS}, which means that the timer actually starts a short time before the current reaches the defined current limit.

However, if the overcurrent condition is continuous and the sense voltage remains above the circuit breaker trip voltage, the 60 µA pull-up remains active and the FET remains in regulation.

This allows the TIMER pin to reach V_{TIMERH} and initiate the GATE shutdown. On the ADM1276, the $\overline{LATCH}$ pin is pulled low immediately.

In latch-off mode, the TIMER pin is switched to the 2 µA pull-down when it reaches the V_{TIMERH} threshold. The $\overline{LATCH}$ pin remains low. While the TIMER pin is being pulled down, the hot swap controller remains off and cannot be turned back on.

When the voltage on the TIMER pin goes below the V_{TIMERL} threshold, the hot swap controller can be reenabled by toggling the UV pin or by using the PMBus OPERATION command to toggle the on bit from on to off and then on again.

HOT SWAP RETRY DUTY CYCLE

The ADM1276 turns off the FET after an overcurrent fault and then uses the capacitor on the TIMER pin to provide a delay before automatically retrying the hot swap operation. To configure the ADM1276 for autoretry mode, the $\overline{LATCH}$ pin is tied to either the UV pin or to the ENABLE pin. Note that a pull-up resistor is required on the $\overline{LATCH}$ pin.

When an overcurrent fault occurs, the capacitor on the TIMER pin is charged with a 60 µA pull-up current. When the TIMER pin reaches V_{TIMERH}, the GATE pin is pulled down. When the $\overline{LATCH}$ pin is tied to the UV pin or the ENABLE pin for autoretry mode, the TIMER pin is pulled down with a 2 µA current sink. When the TIMER pin reaches V_{TIMERL} (0.2 V), it automatically restarts the hot swap operation.

The duty cycle of this automatic retry cycle is set by the ratio of 2 µA/60 µA, which approximates to being on about 4% of the time. The value of the timer capacitor determines the on time of this cycle, which is calculated as follows:

$$t_{ON} = V_{TIMERH} \times (C_{TIMER}/60\ \mu A)$$

$$t_{OFF} = (V_{TIMERH} - V_{TIMERL}) \times (C_{TIMER}/2\ \mu A)$$

A 100 nF capacitor on the TIMER pin gives an on time of 1.67 ms and an off time of 40 ms. The device retries indefinitely in this manner and can be disabled manually by holding the UV or ENABLE pin low, or by disconnecting the $\overline{LATCH}$ pin. To prevent thermal stress, an RC network can be used to extend the retry time to any desired level.

FET GATE DRIVE CLAMPS

The charge pump used on the GATE pin is capable of driving the pin to $V_{CC} + (2 \times V_{CC})$, but it is clamped to less than 14 V above the SENSE± pins and less than 31 V. These clamps ensure that the maximum V_{GS} rating of the FET is not exceeded.

FAST RESPONSE TO SEVERE OVERCURRENT

The ADM1276 features a separate high bandwidth current sense amplifier that is used to detect a severe overcurrent that is indicative of a short-circuit condition. A fast response time allows the ADM1276 to handle events of this type that could otherwise cause catastrophic damage if not detected and acted on very quickly. The fast response circuit ensures that the ADM1276 can detect an overcurrent event at approximately 200% to 250% of the normal current limit (ISET) and can respond to and control the current within 1 µs, in most cases.

UNDERVOLTAGE AND OVERVOLTAGE

The ADM1276 monitors the supply voltage for undervoltage (UV) and overvoltage (OV) conditions. The UV and OV pins are connected to the input of an internal voltage comparator, and its voltage level is internally compared with a 1 V voltage reference.

Figure 49 illustrates the voltage monitoring input connections. An external resistor network divides the supply voltage for monitoring. An undervoltage event is detected when the voltage connected to the UV pin falls below 1 V, and the gate is shut down using the 10 mA pull-down device. Similarly, when an overvoltage event occurs and the voltage on the OV pin exceeds 1 V, the gate is shut down using the 10 mA pull-down device.

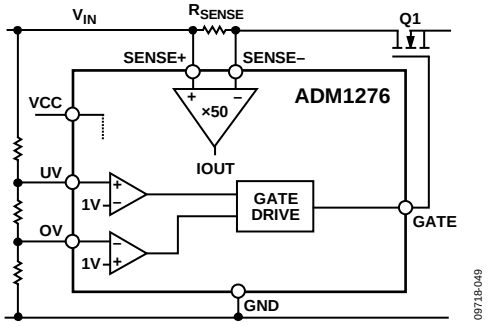

Figure 49. Undervoltage and Overvoltage Supply Monitoring

ENABLE INPUT

The ADM1276 provides a dedicated ENABLE digital input pin. The ENABLE pin allows the ADM1276 to remain off by using a hardware signal, even when the voltage on the UV pin is above 1.0 V and the voltage on the OV pin is less than 1.0 V. Although the UV pin can be used to provide a digital enable signal, using the ENABLE pin for this purpose means that the ability to monitor for undervoltage conditions is not lost.

In addition to the conditions for the UV and OV pins, the ADM1276 ENABLE input pin must be high for the device to begin a power-up sequence.

A similar function can be achieved using the UV pin directly. Alternatively, if the UV divider function is still required, the configuration shown in Figure 50 can be used.

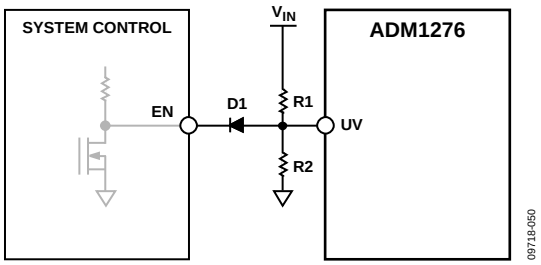

Figure 50. Using the UV Pin as an Enable

Diode D1 prevents the external driver pull-up from affecting the UV threshold. Select Diode D1 using the following criteria:

$$(V_F \times D1) + (V_{OL} \times EN) << 1.0\ V\ (I_F = V_{IN}/R1)$$

Ensure that the EN sink current does not exceed the specified V_{OL} value. If the open-drain device has no pull-up, the diode is not required.

POWER GOOD

The power good (PWRGD) output can be used to indicate whether the output voltage is above a user-defined threshold and can, therefore, be considered good. The PWRGD output is derived using the FLB resistor network, composed of R1 and R2 (see Figure 51).

The PWRGD pin is an open-drain output that pulls low when the voltage at the FLB pin is lower than 1.1 × V_{ISET} (power bad). When the voltage at the FLB pin is above this threshold (indicating that the output voltage has risen), the open-drain pull-down is disabled, allowing PWRGD to be pulled high. PWRGD is guaranteed to be in a valid state for VCC ≥ 1 V.

Hysteresis on the FLB pin is provided by a 2 µA internal current source that is switched on when the V_{FLB} input voltage exceeds the input threshold. The current source is disconnected when V_{OUT} drops below the foldback threshold voltage minus the hysteresis voltage. Resistor R3 is internal to the ADM1276. The hysteresis voltage at the FLB pin can be varied by adjusting the parallel combination of Resistor R1 and Resistor R2.

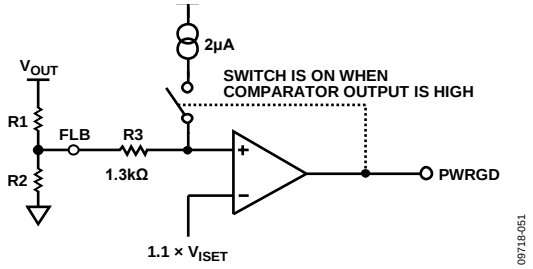

Figure 51. Generation of PWRGD Signal

VOUT MEASUREMENT

The VOUT pin on the ADM1276 can be used to provide an alternate voltage for the power monitor to measure. The user can choose to measure the voltage at the SENSE+ pin or the voltage at the VOUT pin, using either the low or high input voltage range.

If the VOUT pin is to be used to measure the output voltage after the FET, insert a 1 kΩ resistor in series between the source of the FET and the VOUT pin. This resistor provides some separation between the ADM1276 and the FET source during a fault condition; thus, ADM1276 operation is not affected.

FET HEALTH

The ADM1276 provides a method of detecting a shorted pass FET. The FET health status can be used to generate an alert on the GPO2/$\overline{\text{ALERT2}}$ pin. By default at power-up, an alert is generated on the GPO2/$\overline{\text{ALERT2}}$ pin of the ADM1276 when the FET health status indicates that a bad FET is present. FET health is considered bad if all of the following conditions are true:

- The ADM1276 is holding the FET off, for example, during the initial power-on cycle time.
- V_{SENSE} > 2 mV.
- V_{GATE} < ~1 V, that is, less than the FET gate threshold.

POWER MONITOR

The ADM1276 features an integrated ADC that accurately measures the current sense voltage, the input voltage, and (optionally) the output voltage. The measured input voltage and current being delivered to the load are multiplied to give a power value that can be read back. Each power value is also added to an accumulator that can be read back to allow an external device to calculate the energy consumption of the load.

The ADM1276 can report the measured current, input voltage, and the output voltage. The PEAK_IOUT, PEAK_VIN, and PEAK_VOUT commands can be used to read the highest peak current or voltage since the value was last cleared.

An averaging function is provided for voltage and current that allows a number of samples to be averaged by the ADM1276. This function reduces the need for postprocessing of sampled data by the host processor. The number of samples that can be averaged is 2^N, where N is in the range of 0 to 7.

The power monitor current sense amplifier is bipolar and can measure both positive and negative currents. The power monitor amplifier has an input range of ±25 mV.

Two input voltage ranges are available and can be selected using the PMBus interface: 0 V to 6 V (low input range) and 0 V to 20 V (high input range).

The two basic modes of operation for the power monitor are single shot and continuous. In single shot mode, the power monitor samples the input voltage and current a number of times, depending on the averaging value selected by the user. The ADM1276 returns a single value corresponding to the average voltage and current measured. When configured for continuous mode, the power monitor continuously samples voltage and current, making the most recent sample available to be read.

The single shot mode can be triggered in a number of ways. The simplest is by selecting the single shot mode using the PMON_CONFIG command and writing to the convert bit using the PMON_CONTROL command. The convert bit can also be written as part of a PMBus group command. Using a group command allows multiple devices to be written to as part of the same I^2C bus transaction, with all devices executing the command when the stop condition appears on the bus. In this way, several devices can be triggered to sample at the same time.

Each time a current sense and input voltage measurements are taken, a power calculation is performed, multiplying the two measurements together. This can be read from the device using the READ_PIN command, returning the input power.

At the same time, the calculated power value is added to a power accumulator register, that may increment a rollover counter if the value exceeds the maximum accumulator value, and that also increments a power sample counter.

The power accumulator and power sample counter are read using the same READ_EIN command to ensure that the accumulated value and sample count are from the same point in time. The bus host reading the data assigns a timestamp to when the data is read. By calculating the time difference between consecutive uses of READ_EIN, and determining the delta in power consumed, it is possible for the host to determine the total energy consumed over that period.

PMBus INTERFACE

The I²C bus is a common, simple serial bus used by many devices to communicate. It defines the electrical specifications, the bus timing, the physical layer, and some basic protocol rules.

SMBus is based on I²C and aims to provide a more robust and fault tolerant bus. Functions such as bus timeout and packet error checking are added to help achieve this robustness, along with more specific definitions of the bus messages used to read and write data to devices on the bus.

PMBus is layered on top of SMBus and, in turn, on I²C. Using the SMBus defined bus messages, PMBus defines a set of standard commands that can be used to control a device that is part of a power chain.

The ADM1276 command set is based upon the *PMBus™ Power System Management Protocol Specification*, Part I and Part II, Revision 1.2. This version of the standard is intended to provide a common set of commands for communicating with dc-to-dc type devices. However, many of the standard PMBus commands can be mapped directly to the functions of a hot swap controller.

Part I and Part II of the PMBus standard describe the basic commands and how they can be used in a typical PMBus setup. The following sections describe how the PMBus standard and the ADM1276 specific commands are used.

DEVICE ADDRESSING

The ADM1276 is available in one model: the ADM1276-3. The PMBus address is 7 bits in size. The upper 5 bits (MSBs) of the address word are fixed. The base address for the ADM1276 is 01000xx (0x20).

The ADM1276 has a single ADR pin that is used to select one of four possible addresses. The ADR pin connection selects the lowest two bits (LSBs) of the 7-bit address word (see Table 6).

Table 6. PMBus Addresses and ADR Pin Connection

Value of Address LSBs	ADR Pin Connection
00	Connect to GND
01	150 kΩ resistor to GND
10	No connection (floating)
11	Connect to VCAP

SMBus PROTOCOL USAGE

All I²C transactions on the ADM1276 are done using SMBus defined bus protocols. The following SMBus protocols are implemented by the ADM1276:

- Send byte
- Receive byte
- Write byte
- Read byte
- Write word
- Read word
- Block read

PACKET ERROR CHECKING

The ADM1276 PMBus interface supports the use of the packet error checking (PEC) byte that is defined in the SMBus standard. The PEC byte is transmitted by the ADM1276 during a read transaction or sent by the bus host to the ADM1276 during a write transaction. The ADM1276 supports the use of PEC with all the SMBus protocols that it implements.

The use of the PEC byte is optional. The bus host can decide whether to use the PEC byte with the ADM1276 on a message-by-message basis. There is no need to enable or disable PEC in the ADM1276.

The PEC byte is used by the bus host or the ADM1276 to detect errors during a bus transaction, depending on whether the transaction is a read or a write. If the host determines that the PEC byte read during a read transaction is incorrect, it can decide to repeat the read if necessary. If the ADM1276 determines that the PEC byte sent during a write transaction is incorrect, it ignores the command (does not execute it) and sets a status flag.

Within a group command, the host can choose to send or not send a PEC byte as part of the message to the ADM1276.

PARTIAL TRANSACTIONS ON I²C BUS

In the event of a specific sequence of events occurring on the I²C bus, it is possible for the I²C interface on the device to go into a state where it will fail to acknowledge the next I²C transaction directed to it. There are two ways that this behavior can be triggered:

- A partial I²C transaction consisting of a start condition, followed by a single SCL clock pulse and stop condition.
- If the I²C bus master does not follow the 300 ns SDA data hold time when signaling the ACK/NACK bit at the end of a transaction. The device sees this as a single SCL clock partial transaction.

In the event that the device does not acknowledge a transaction, then the I²C interface on the device can be reset by sending a series of up to 16 SCL clock pulses, or performing a dummy transaction to another I²C address on the bus.

SMBus MESSAGE FORMATS

Figure 52 to Figure 60 show all the SMBus protocols supported by the ADM1276, along with the PEC variant. In these figures, unshaded cells indicate that the bus host is actively driving the bus; shaded cells indicate that the ADM1276 is driving the bus.

Figure 52 to Figure 60 use the following abbreviations:

S is the start condition.
Sr is the repeated start condition.
P is the stop condition.
R is the read bit.
$\overline{W}$ is the write bit.
A is the acknowledge bit (0).
$\overline{A}$ is the acknowledge bit (1).

"A" represents the acknowledge bit. The acknowledge bit is typically active low (Logic 0) if the transmitted byte is successfully received by a device. However, when the receiving device is the bus master, the acknowledge bit for the last byte read is a Logic 1, indicated by $\overline{A}$.

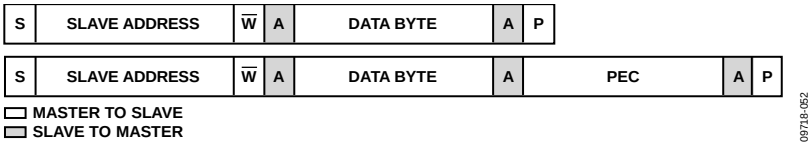

Figure 52. Send Byte and Send Byte with PEC

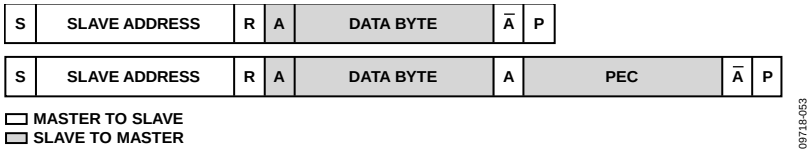

Figure 53. Receive Byte and Receive Byte with PEC

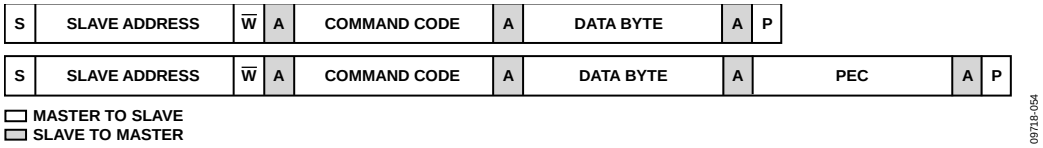

Figure 54. Write Byte and Write Byte with PEC

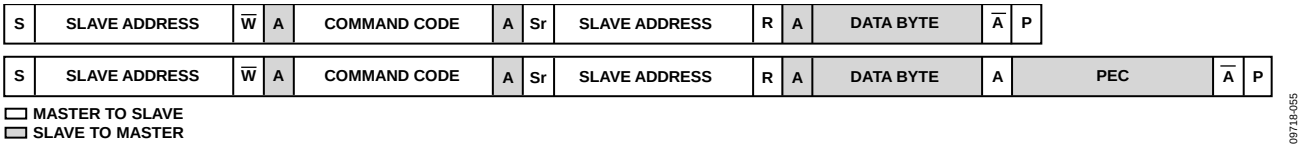

Figure 55. Read Byte and Read Byte with PEC

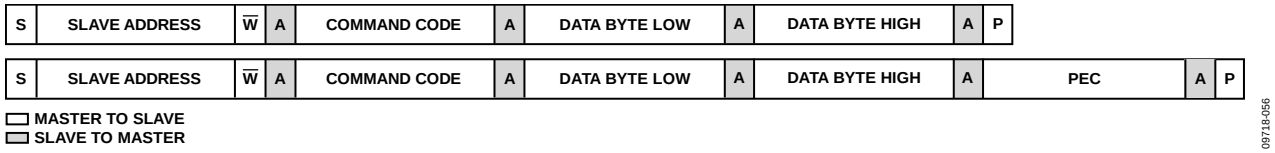

Figure 56. Write Word and Write Word with PEC

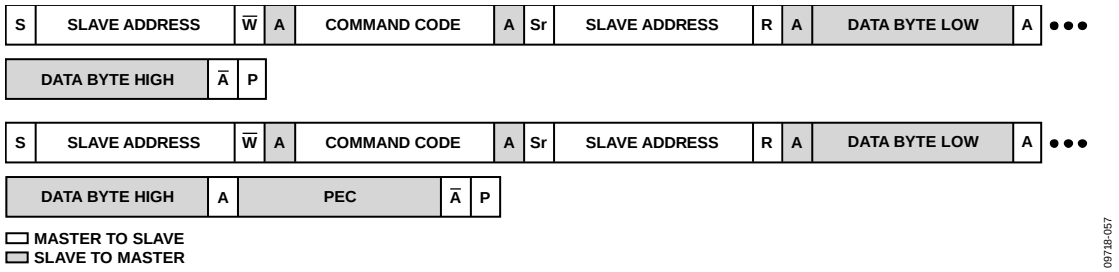

Figure 57. Read Word and Read Word with PEC

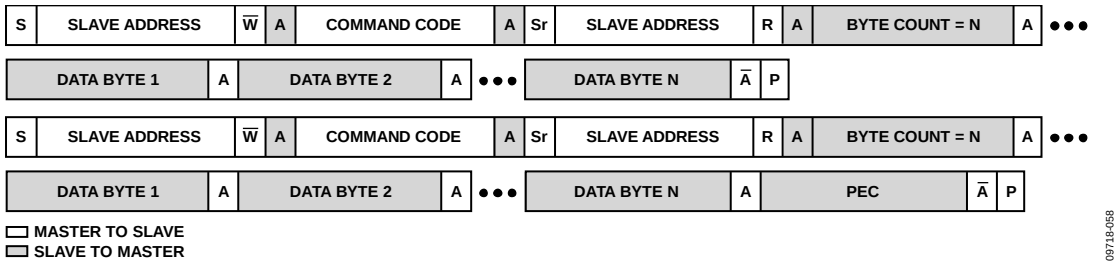

Figure 58. Block Read and Block Read with PEC

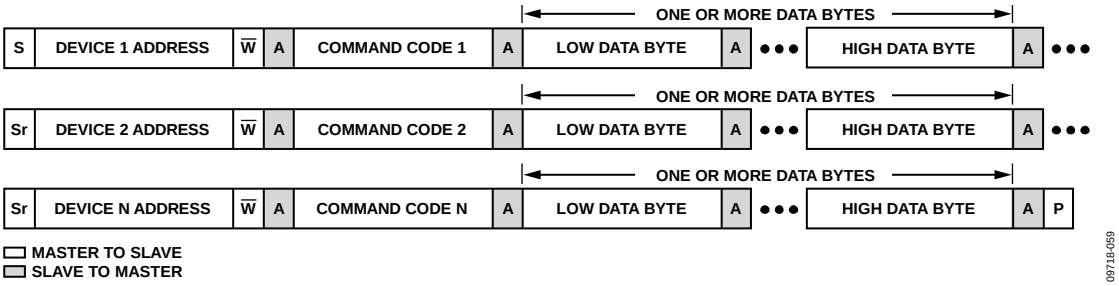

Figure 59. Group Command

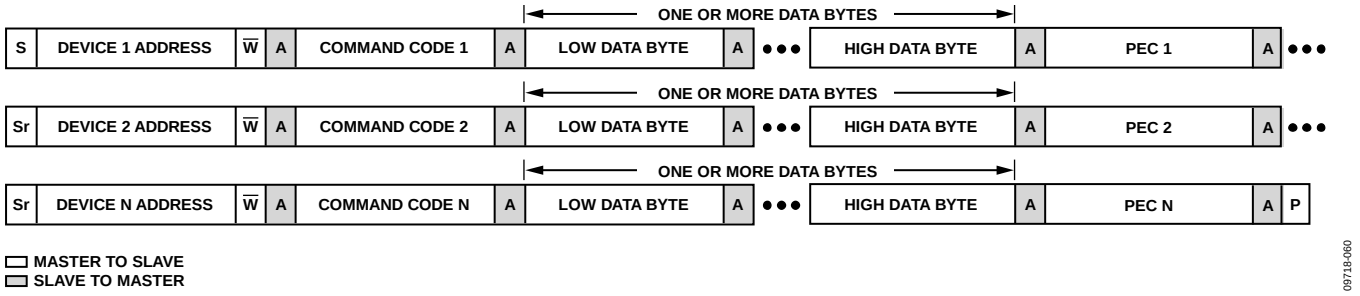

Figure 60. Group Command with PEC

GROUP COMMANDS

The PMBus standard defines what are known as group commands. Group commands are single bus transactions that send commands or data to more than one device at the same time. Each device is addressed separately, using its own address; there is no special group command address. A group command transaction can contain only write commands that send data to a device. It is not possible to use a group command to read data from devices.

From an I²C protocol point of view, a normal write command consists of the following:

- I²C start condition.
- Slave address bits and a write bit (followed by an acknowledge from the slave device).
- One or more data bytes (each of which is followed by an acknowledge from the slave device).
- I²C stop condition to end the transaction.

A group command differs from a nongroup command in that after the data is written to one slave device, a repeated start condition is placed on the bus followed by the address of the next slave device and data. This continues until all of the devices have been written to, at which point the stop condition is placed on the bus by the master device.

The format of a group command and a group command with PEC is shown in Figure 59 and Figure 60.

Each device that is written to as part of the group command does not immediately execute the command written. The device must wait until the stop condition appears on the bus. At that point, all devices execute their commands at the same time.

Using a group command, it is possible, for example, to turn multiple PMBus devices on or off simultaneously. In the case of the ADM1276, it is also possible to issue a power monitor command that initiates a conversion, causing multiple ADM1276 devices to sample together at the same time.

HOT SWAP CONTROL COMMANDS

OPERATION Command

The GATE pin that drives the FET is controlled by a dedicated hot swap state machine. The UV and OV input pins, the TIMER and SS pins, and the current sense all feed into the state machine and they control when and how strongly the gate is turned off.

It is also possible to control the hot swap GATE output using commands over the PMBus interface. The OPERATION command can be used to request the hot swap output to turn on. However, if the UV pin indicates that the input supply is less than required, the hot swap output is not turned on, even if the OPERATION command indicates that the output should be enabled.

If the OPERATION command is used to disable the hot swap output, the GATE pin is held low, even if all hot swap state machine control inputs indicate that it can be enabled.

The default state of Bit 7 (also named the on bit) of the OPERATION command is 1; therefore, the hot swap output is always enabled when the ADM1276 emerges from UVLO. If the on bit is never changed, the UV input or the ENABLE input is the hot swap master on/off control signal.

By default at power-up, the OPERATION command is disabled and must be enabled using the DEVICE_CONFIG command. This prevents inadvertent shutdowns of the hot swap controller by software.

If the on bit is set to 0 while the UV signal is high, the hot swap output is turned off. If the UV signal is low or if the OV signal is high, the hot swap output is already off and the status of the on bit has no effect.

If the on bit is set to 1, the hot swap output is requested to turn on. If the UV signal is low or if the OV signal is high, setting the on bit to 1 has no effect, and the hot swap output remains off.

It is possible to determine at any time whether the hot swap output is enabled using the STATUS_BYTE or the STATUS_WORD command (see the Status Commands section).

The OPERATION command can also clear any latched faults in the status registers. To clear latched faults, set the on bit to 0 and then reset it to 1.

DEVICE_CONFIG Command

The DEVICE_CONFIG command configures certain settings within the ADM1276, for example, enabling or disabling foldback in the hot swap controller, or modifying the duration of the severe overcurrent glitch filter. This command is also used to configure the polarity of the second IOUT current warnings.

The OPERATION command is disabled at power-up. If the OPERATION command is received, the ADM1276 responds with a no acknowledge. To allow use of the OPERATION command, the OPERATION_CMD_EN bit must be set via the DEVICE_CONFIG command.

POWER_CYCLE Command

The POWER_CYCLE command can be used to request that the ADM1276 be turned off for ~4 seconds and then turned back on. This command can be useful if the processor that controls the ADM1276 is also powered off when the ADM1276 is turned off. This command allows the processor to request that the ADM1276 turn off and on again as part of a single command.

ADM1276 INFORMATION COMMANDS

CAPABILITY Command

The CAPABILITY command can be used by host processors to determine the I^2C bus features that are supported by the ADM1276. The features that can be reported include the maximum bus speed, whether the device supports the packet error checking (PEC) byte, and the SMBAlert reporting function.

PMBUS_REVISION Command

The PMBUS_REVISION command reports the version of Part I and Part II of the PMBus standard.

MFR_ID, MFR_MODEL, and MFR_REVISION Commands

The MFR_ID, MFR_MODEL, and MFR_REVISION commands return ASCII strings that can be used to facilitate detection and identification of the ADM1276 on the bus.

These commands are read using the SMBus block read message type. This message type requires that the ADM1276 return a byte count corresponding to the length of the string data that is to be read back.

STATUS COMMANDS

The ADM1276 provides a number of status bits that are used to report faults and warnings from the hot swap controller and the power monitor. These status bits are located in six different registers that are arranged in a hierarchy. The STATUS_BYTE and STATUS_WORD commands provide 8 bits and 16 bits of high level information, respectively. The STATUS_BYTE and STATUS_WORD commands contain the most important status

bits, as well as pointer bits that indicate whether any of the four other status registers need to be read for more detailed status information.

In the ADM1276, a particular distinction is made between faults and warnings. A fault is always generated by the hot swap controller and is defined by hardware component values. Three events can generate a fault:

- Overcurrent condition that causes the hot swap timer to time out.
- Overvoltage condition on the OV pin.
- Undervoltage condition on the UV pin.

When a fault occurs, the hot swap controller always takes some action, usually to turn off the GATE pin, which is driving the FET. A fault can also generate an SMBAlert on the GPO2/ALERT2 pin.

All warnings in the ADM1276 are generated by the power monitor, which samples the voltage and current and then compares these measurements to the threshold values set by the various limit commands. A warning has no effect on the hot swap controller, but it may generate an SMBAlert on the GPO2/ALERT2 output pin.

When a status bit is set, it always means that the status condition—fault or warning—is active or was active at some point in the past. When a fault or warning bit is set, it is latched until it is explicitly cleared using either the OPERATION or the CLEAR_FAULTS command. Some other status bits are live, that is, they always reflect a status condition and are never latched.

STATUS_BYTE and STATUS_WORD Commands

The STATUS_BYTE and STATUS_WORD commands can be used to obtain a snapshot of the overall part status. These commands indicate whether it is necessary to read more detailed information using the other status commands.

The low byte of the word returned by the STATUS_WORD command is the same byte returned by the STATUS_BYTE command. The high byte of the word returned by the STATUS_WORD command provides a number of bits that can be used to determine which of the other status commands needs to be issued to obtain all active status bits.

STATUS_INPUT Command

The STATUS_INPUT command returns a number of bits relating to voltage faults and warnings on the input supply.

STATUS_VOUT Command

The STATUS_VOUT command returns a number of bits relating to voltage faults and warnings on the output supply.

STATUS_IOUT Command

The STATUS_IOUT command returns a number of bits relating to current faults and warnings on the output supply.

STATUS_MFR_SPECIFIC Command

The STATUS_MFR_SPECIFIC command is a standard PMBus command, but the contents of the byte returned are specific to the ADM1276.

CLEAR_FAULTS Command

The CLEAR_FAULTS command is used to clear fault and warnings bits when they are set. Fault and warnings bits are latched when they are set. In this way, a host can read the bits any time after the fault or warning condition occurs and determine which problem actually occurred.

If the CLEAR_FAULTS command is issued and the fault or warning condition is no longer active, the status bit is cleared. If the condition is still active—for example, if an input voltage is below the undervoltage threshold of the UV pin—the CLEAR_FAULTS command attempts to clear the status bit, but that status bit is immediately set again.

GPO AND ALERT PIN SETUP COMMANDS

A multipurpose pin is provided on the ADM1276: GPO2/ALERT2. The GPO2/ALERT2 pin can be configured over the PMBus in one of three output modes, as follows:

- General-purpose digital output.
- Output for generating an SMBAlert when one or more fault/warning status bits become active in the PMBus status registers.
- Digital comparator.

In digital comparator mode, the current, voltage, and power warning thresholds are compared to the values read or calculated by the ADM1276. The comparison result sets the output high or low according to whether the value is greater or less than the warning threshold that has been set.

For an example of how to configure this pin to generate an SMBAlert and how to respond and clear the condition, see the Example Use of SMBUS Alert Response Address section.

ALERT2_CONFIG Command

Using combinations of bit masks, the ALERT2_CONFIG command can be used to select the status bits that, when set, generate an SMBAlert signal to a processor, or control the digital comparator mode. They can also be used to set a GPO mode on the GPO2/ALERT2 pin, so that it is under software control. If this mode is set, the SMBAlert masking bits are ignored.

POWER MONITOR COMMANDS

The ADM1276 provides a high accuracy, 12-bit current and voltage power monitor. The power monitor can be configured in a number of different modes of operation and can run in either continuous mode or single shot mode with a number of different sample averaging options.

The power monitor can measure the following quantities:

- Input voltage (VIN).
- Output voltage (VOUT).
- Output current (IOUT).

The following quantities are then calculated:

- Input power (PIN).
- Input energy (EIN).

PMON_CONFIG Command

The power monitor can run in a number of different modes with different input voltage range settings. The PMON_CONFIG command is used to set up the power monitor.

The settings that can be configured are as follows:

- Single shot or continuous sampling.
- VOUT sampling enable/disable.
- Voltage input range.
- Current and voltage sample averaging.

Modifying the power monitor settings while the power monitor is sampling is not recommended. To ensure correct operation of the device and to avoid any potential spurious data or the generation of status alerts, stop the power monitor before any of these settings are changed.

PMON_CONTROL Command

Power monitor sampling can be initiated via hardware or via software using the PMON_CONTROL command. This command can be used with single shot or continuous mode.

READ_VIN, READ_VOUT, and READ_IOUT Commands

The ADM1276 power monitor measures the voltage developed across the sense resistor to provide a current measurement. The input voltage from the SENSE+ pin is always measured, and the output voltage present on the VOUT pin is available if enabled with the PMON_CONFIG command.

READ_PIN, READ_PIN_EXT, READ_EIN, and READ_EIN_EXT Commands

The 12-bit VIN input voltage and 12-bit IOUT current measurement values are multiplied by the ADM1276 to give the input power value. This is accomplished by using fixed point arithmetic, and produces a 24-bit value. It is assumed that the numbers are in the 12.0 format, meaning that there is no fractional part. Note that only positive IOUT values are used to avoid returning a negative power.

This 24-bit value can be read from the ADM1276 using the READ_PIN_EXT command, where the most significant bit (MSB) is always a zero because PIN_EXT is a twos complement binary value that is always positive.

The sixteen most significant bits of the 24-bit value are used as the value for PIN. The MSB of the 16-bit PIN word is always zero, as PIN is a twos complement binary value, that is always positive.

Each time a power calculation is done, the 24-bit power value is added to a 24-bit energy accumulator register. This is a twos complement representation as well, so the MSB is always zero. Each time this energy accumulator register rolls over from 0x7FFFFF to 0x000000, a 16-bit rollover counter is incremented. The rollover counter is straight binary, with a maximum value of 0xFFFF before it rolls over.

A 24-bit straight binary power sample counter is also incremented by 1 each time a power value is calculated and added to the energy accumulator.

These registers can be read back using one of two commands, depending on the level of accuracy required for the energy accumulator and the desire to limit the frequency of reads from the ADM1276.

A bus host can read these values, and by calculating the delta in the energy accumulated, the delta in the number of samples, and the time delta since the last read, the host can calculate the average power since the last read, as well as the energy consumed since then.

The time delta is calculated by the bus host based on when it sends its commands to read from the device, and is not provided by the ADM1276.

To avoid loss of data, the bus host must read at a rate that ensures the rollover counter does not wrap around more than once, and if the counter does wrap around that the next value read for PIN is less than the previous one.

The READ_EIN command returns the top 16 bits of the energy accumulator, the lower eight bits of the rollover counter, and the full 24 bits of the sample counter.

The READ_EIN_EXT command returns the full 24 bits of the energy accumulator, the full 16 bits of the rollover counter, and the full 24 bits of the sample counter. The use of the longer rollover counter means that the time interval between reads of the part can be increased from seconds to minutes, without losing any data.

PEAK_IOUT, PEAK_VIN, PEAK_VOUT, and PEAK_PIN Commands

In addition to the standard PMBus commands for reading voltage and current, the ADM1276 provides commands that can report the maximum peak voltage, current, or power value since the peak value was last cleared.

The peak values are updated only after the power monitor has sampled and averaged the current and voltage measurements. Individual peak values are cleared by writing a 0 value with the corresponding command.

WARNING LIMIT SETUP COMMANDS

The ADM1276 power monitor can monitor a number of different warning conditions simultaneously and report any current or voltage values that exceed the user-defined thresholds using the status commands.

All comparisons performed by the power monitor require the measured value to be strictly greater or less than the threshold value.

At power-up, all threshold limits are set to either minimum scale (for undervoltage or undercurrent conditions) or to maximum scale (for overvoltage or overcurrent or overpower conditions). This effectively disables the generation of any status warnings by default; warning bits are not set in the status registers until the user explicitly sets the threshold values.

VIN_OV_WARN_LIMIT and VIN_UV_WARN_LIMIT Commands

The VIN_OV_WARN_LIMIT and VIN_UV_WARN_LIMIT commands are used to set the OV and UV thresholds on the input voltage, as measured at the SENSE+ pin.

VOUT_OV_WARN_LIMIT and VOUT_UV_WARN_LIMIT Commands

The VOUT_OV_WARN_LIMIT and VOUT_UV_WARN_LIMIT commands are used to set the OV and UV thresholds on the output voltage, as measured at the VOUT pin.

IOUT_OC_WARN_LIMIT Command

The IOUT_OC_WARN_LIMIT command sets the OC threshold for the current flowing through the sense resistor.

IOUT_WARN2_LIMIT Command

The IOUT_WARN2_LIMIT command provides a second current warning threshold that can be programmed. The polarity of this warning can be set to overcurrent or undercurrent using the DEVICE_CONFIG command.

PIN_OP_WARN_LIMIT Command

The PIN_OP_WARN_LIMIT command is used to set the overpower threshold for the power delivered to the load.

PMBus DIRECT FORMAT CONVERSION

The ADM1276 uses the PMBus direct format to represent real-world quantities such as voltage, current, and power values. A direct format number takes the form of a 2-byte, twos complement, binary integer value.

It is possible to convert between direct format value and real-world quantities using the following equations. Equation 1 converts from real-world quantities to PMBus direct values, and Equation 2 converts PMBus direct format values to real-world values.

$$Y = (mX + b) \times 10^{R} \quad (1)$$

$$X = 1/m \times (Y \times 10^{-R} - b) \quad (2)$$

where:
Y is the value in PMBus direct format.
X is the real-world value.
m is the slope coefficient, a 2-byte, twos complement integer.
b is the offset, a 2-byte, twos complement integer.
R is a scaling exponent, a 1-byte, twos complement integer.

The same equations are used for voltage, current, and power conversions, the only difference being the values of the m, b, and R coefficients that are used.

Table 7 lists all the coefficients required for the ADM1276. The current and power coefficients shown are dependent on the value of the external sense resistor used in a given application. This means that an additional calculation must be performed to take the sense resistor value into account to obtain the coefficients for a specific sense resistor value.

The sense resistor value used in the calculations to obtain the coefficients is expressed in milliohms. The m coefficients are defined as 2-byte twos complement numbers in the PMBus standard, therefore the maximum positive value that can be represented is 32,767. If the m value is greater than that, and is to be stored in PMBus standard form, then the m coefficients should be divided by 10, and the R coefficient increased by a value of 1. For example, if on the 20 V range, a 10 milliohm sense resistor is used, the m coefficient is 6043, and the R coefficient is −1.

Example 1: IOUT_OC_WARN_LIMIT requires a current-limit value expressed in direct format.

If the required current limit is 10 A, and the sense resistor is 2 mΩ, then the first step is to determine the voltage coefficient. This is simply m = 807 × 2, giving 1614.

Using Equation 1, and expressing X, in units of Amps

$$Y = ((1614 \times 10) + 20{,}475) \times 10^{-1}$$

$$Y = 3661.5 = 3662 \text{ (rounded up to integer form)}$$

Writing a value of 3662 with the IOUT_OC_WARN_LIMIT command sets an overcurrent warning at 10 A.

Example 2: The READ_IOUT command returns a direct format value of 3339 representing the current flowing through a sense resistor of 1 mΩ.

To convert this value to the current flowing, use Equation 2, with m = 807 × 1.

$$X = 1/807 \times (3339 \times 10^{1} - 20{,}475)$$

$$X = 16.00 \text{ A}$$

This means that when READ_IOUT returns a value of 3339, 16.00 A is flowing in the sense resistor.

There are two input voltage ranges, so there are also two sets of coefficients for converting to and from the power value, depending on which voltage range is selected.

Note the following:

- The same calculations that are used to convert power values also apply to the energy accumulator value returned by the READ_EIN command because the energy accumulator is a summation of multiple power values.
- The READ_PIN_EXT and READ_EIN_EXT commands return 24-bit extended precision versions of the 16-bit values returned by READ_PIN and READ_EIN. The direct

format values must be divided by 256 prior to being converted with the coefficients shown in Table 7.

Example 3: The PIN_OP_WARN_LIMIT command requires a power limit value expressed in direct format.

If the required power limit is 350 W and the sense resistor is 1 mΩ, the first step is to determine the m coefficient. Assuming the 0 V to 20 V range, m = 6043 × 1, which is 6043.

Using Equation 1, and working with the 0 V to 20 V range,

$Y = ((6043 \times 350) \times 10^{-2}$

$Y = 21,150.5 = 21,151$ (rounded up to integer form)

Writing a value of 21,151 with the PIN_OP_WARN_LIMIT command sets an overpower warning at 350 W.

Table 7. PMBus Conversion to Real-World Coefficients

		Voltage (V)		Power (W)	
Coefficient	**Current (A)**	**0 V to 6 V Range**	**0 V to 20 V Range**	**0 V to 6 V Range**	**0 V to 20 V Range**
m	$807 \times R_{SENSE}$	6720	19,199	$2115 \times R_{SENSE}$	$6043 \times R_{SENSE}$
b	20,475	0	0	0	0
R	−1	−1	−2	−1	−2

VOLTAGE AND CURRENT CONVERSION USING LSB VALUES

The direct format voltage and current values returned by the READ_VIN, READ_VOUT, and READ_IOUT commands, and the corresponding peak versions, are the data output directly by the ADM1276 ADC. Because the voltages and currents are 12-bit ADC output codes, they can also be converted to real-world values when there is knowledge of the size of the LSB on the ADC.

The m, b, and R coefficients defined for the PMBus conversion are required to be whole integers by the standard and have, therefore, been rounded slightly. Using this alternative method, with the exact LSB values, can provide somewhat more accurate numerical conversions.

To convert an ADC code to current in amperes, the following formulas can be used:

$$V_{SENSE} = LSB_{25\,mV} \times (I_{ADC} - 2048)$$

$$I_{OUT} = V_{SENSE}/(R_{SENSE} \times 0.001)$$

where:
$V_{SENSE} = (V_{SENSE+}) - (V_{SENSE-})$.
$LSB_{25\,mV}$ = 12.4 µV.
I_{ADC} is the 12-bit ADC code.
I_{OUT} is the measured current value in amperes.
R_{SENSE} is the value of the sense resistor in milliohms.

To convert an ADC code to a voltage, the following formula can be used:

$$V_M = LSB_{xV} \times (V_{ADC} + 0.5)$$

where:
V_M is the measured value in volts.
V_{ADC} is the 12-bit ADC code.
LSB_{xV} values are based on the voltage range (see Table 8).

Table 8. Voltage Ranges and LSB Values

Voltage Range, LSB_{xV}	LSB Magnitude
0 V to 6 V	1.488 mV
0 V to 20 V	5.208 mV

To convert a current in amperes to a 12-bit value, the following formula can be used (round the result to the nearest integer):

$$V_{SENSE} = I_A \times R_{SENSE} \times 0.001$$

$$I_{CODE} = 2048 + (V_{SENSE}/LSB_{25\,mV})$$

where:
$V_{SENSE} = (V_{SENSE+}) - (V_{SENSE-})$.
I_A is the current value in amperes.
R_{SENSE} is the value of the sense resistor in milliohms.
I_{CODE} is the 12-bit ADC code.
$LSB_{25\,mV}$ = 12.4 µV.

To convert a voltage to a 12-bit value, the following formula can be used (round the result to the nearest integer):

$$V_{CODE} = (V_A/LSB_{xV}) - 0.5$$

where:
V_{CODE} is the 12-bit ADC code.
V_A is the voltage value in volts.
LSB_{xV} values are based on the voltage range (see Table 8).

GPO2/$\overline{\text{ALERT2}}$ PIN BEHAVIOR

The ADM1276 provides a very flexible alert system, whereby one or more fault/warning conditions can be indicated to an external device.

FAULTS AND WARNINGS

A PMBus fault on the ADM1276 is always generated due to an analog event and causes a change in state in the hot swap output, turning it off. The three defined fault sources are as follows:

- Undervoltage (UV) event detected on the UV pin.
- Overvoltage (OV) event detected on the OV pin.
- Overcurrent (OC) event that causes a hot swap timeout.

Faults are continuously monitored, and, as long as power is applied to the device, they cannot be disabled. When a fault occurs, a corresponding status bit is set in one or more STATUS_xxx registers.

A value of 1 in a status register bit field always indicates a fault or warning condition. Fault and warning bits in the status registers are latched when set to 1. To clear a latched bit to 0—provided that the fault condition is no longer active—use the CLEAR_FAULTS command or use the OPERATION command to turn the hot swap output off and then on again.

A warning is less severe than a fault and never causes a change in the state of the hot swap controller. The sources of a warning are defined as follows:

- CML: a communications error occurred on the I^2C bus.
- HS timer was active (HSTA): the current regulation was active, but did not necessarily shut the system down.
- IOUT OC warning from the ADC.
- IOUT Warning 2 from the ADC.
- VIN UV warning from the ADC.
- VIN OV warning from the ADC.
- VOUT UV warning from the ADC.
- VOUT OV warning from the ADC.
- PIN OP warning from the VIN × IOUT calculation.

GENERATING AN ALERT

A host device can periodically poll the ADM1276 using the status commands to determine whether a fault/warning is active. However, this polling is very inefficient in terms of software and processor resources. The ADM1276 has a GPO2/$\overline{\text{ALERT2}}$ output pin that can be used to generate interrupts to a host processor.

By default at power-up, the open-drain GPO2/$\overline{\text{ALERT2}}$ output is high impedance, so the pin can be pulled high through a resistor. The FET health bad warning is active by default on the GPO2/$\overline{\text{ALERT2}}$ pin at power-up.

Any one or more of the faults and warnings listed in the Faults and Warnings section can be enabled and cause an alert, making the GPO2/$\overline{\text{ALERT2}}$ pin active. By default, the active state of the GPO2/$\overline{\text{ALERT2}}$ pin is low.

For example, to use GPO2/$\overline{\text{ALERT2}}$ to monitor the VOUT UV warning from the ADC, the followings steps must be performed:

1. Set a threshold level with the VOUT_UV_WARN_LIMIT command.
2. Start the power monitor sampling on VOUT.

If a VOUT sample is taken that is below the configured VOUT UV value, the GPO2/$\overline{\text{ALERT2}}$ pin is taken low, signaling an interrupt to a processor.

HANDLING/CLEARING AN ALERT

When faults/warnings are configured on the GPO2/$\overline{\text{ALERT2}}$ pin, the pin becomes active to signal an interrupt to the processor. (The pin is active low, unless inversion is enabled.) The $\overline{\text{ALERT2}}$ signal on the GPO2/$\overline{\text{ALERT2}}$ pin functions as an SMBAlert.

A processor can respond to the interrupt in one of two basic ways:

- If there is only one device on the bus, the processor can simply read the status bytes and issue a CLEAR_FAULTS command to clear all the status bits, which causes the deassertion of the GPO2/$\overline{\text{ALERT2}}$ line. If there is a persistent fault—for example, an undervoltage on the input—the status bits remain set after the CLEAR_FAULTS command is executed because the fault has not been removed. However, the GPO2/$\overline{\text{ALERT2}}$ line is not pulled low unless a new fault or warning becomes active. If the cause of the SMBAlert is a power monitor generated warning and the power monitor is running continuously, the next sample generates a new SMBAlert after the CLEAR_FAULTS command is issued.
- If there are several devices on the bus, the processor can issue an SMBus alert response address command to find out which device asserted the SMBAlert line. The processor can read the status bytes from that device and issue a CLEAR_FAULTS command.

SMBus ALERT RESPONSE ADDRESS

The SMBus alert response address (ARA) is a special address that can be used by the bus host to locate any devices that need to talk to it. A host typically uses a hardware interrupt pin to monitor the SMBus alert pins of a number of devices. When the host interrupt occurs, the host issues a message on the bus using the SMBus receive byte or receive byte with PEC protocol.

The special address used by the host is 0x0C. Any devices that have an SMBAlert signal return their own 7-bit address as the seven MSBs of the data byte. The LSB value is not used and can be either 1 or 0. The host reads the device address from the received data byte and proceeds to handle the alert condition.

More than one device may have an active SMBAlert signal and attempt to communicate with the host. In this case, the device with the lowest address dominates the bus and succeeds in transmitting its address to the host. The device that succeeds disables its SMBus alert signal. If the host sees that the SMBus alert signal is still low, it continues to read addresses until all devices that need to talk to it have successfully transmitted their addresses.

EXAMPLE USE OF SMBus ALERT RESPONSE ADDRESS

The full sequence of steps that occurs when an SMBAlert is generated and cleared is as follows:

1. A fault or warning is enabled using the ALERT2_CONFIG command, and the corresponding status bit for the fault or warning changes from 0 to 1, indicating that the fault or warning has just become active.
2. The GPO2/$\overline{\text{ALERT2}}$ pin becomes active (low) to signal that an SMBAlert is active.
3. The host processor issues an SMBus alert response address command to determine which device has an active alert.
4. If there are no other active alerts from devices with lower I^2C addresses, this device makes the GPO2/$\overline{\text{ALERT2}}$ pin inactive (high) during the no acknowledge bit period after it sends its address to the host processor.
5. If the GPO2/$\overline{\text{ALERT2}}$ pin stays low, the host processor must continue to issue SMBus alert response address commands to devices to find out the addresses of all devices whose status it must check.
6. The ADM1276 continues to operate with the GPO2/$\overline{\text{ALERT2}}$ pin inactive and the contents of the status bytes unchanged until the host reads the status bytes and clears them, or until a new fault occurs. That is, if a status bit for a fault/warning that is enabled on the GPO2/$\overline{\text{ALERT2}}$ pin and that was not already active (equal to 1) changes from 0 to 1, a new alert is generated, causing the GPO2/$\overline{\text{ALERT2}}$ pin to become active again.

PMBus COMMAND REFERENCE

Command codes are in hexadecimal format.

Table 9. PMBus Command Summary

Command Code	Command Name	SMBus Transaction Type	Number of Data Bytes	Default Value at Reset
0x01	OPERATION	Read/write byte	1	0x80
0x03	CLEAR_FAULTS	Send byte	0	Not applicable
0x19	CAPABILITY	Read byte	1	0xB0
0x42	VOUT_OV_WARN_LIMIT	Read/write word	2	0x0FFF
0x43	VOUT_UV_WARN_LIMIT	Read/write word	2	0x0000
0x4A	IOUT_OC_WARN_LIMIT	Read/write word	2	0x0FFF
0x57	VIN_OV_WARN_LIMIT	Read/write word	2	0x0FFF
0x58	VIN_UV_WARN_LIMIT	Read/write word	2	0x0000
0x6B	PIN_OP_WARN_LIMIT	Read/write word	2	0x7FFF
0x78	STATUS_BYTE	Read byte	1	0x00
0x79	STATUS_WORD	Read word	2	0x0000
0x7A	STATUS_VOUT	Read byte	1	0x00
0x7B	STATUS_IOUT	Read byte	1	0x00
0x7C	STATUS_INPUT	Read byte	1	0x00
0x80	STATUS_MFR_SPECIFIC	Read byte	1	0x00
0x86	READ_EIN	Block read	1 (byte count) + 6 (data)	0x06, 0x0000, 0x00, 0x000000
0x88	READ_VIN	Read word	2	0x0000
0x8B	READ_VOUT	Read word	2	0x0000
0x8C	READ_IOUT	Read word	2	0x0000
0x97	READ_PIN	Read word	2	0x0000
0x98	PMBUS_REVISION	Read byte	1	0x22
0x99	MFR_ID	Block read	1 (byte count) + 3 (data)	0x03 + ASCII "ADI"
0x9A	MFR_MODEL	Block read	1 (byte count) + 9 (data)	0x09 + ASCII "ADM1276-3"
0x9B	MFR_REVISION	Block read	1 (byte count) + 1 (data)	0x01 + ASCII "0"
0xD0	PEAK_IOUT	Read/write word	2	0x0000
0xD1	PEAK_VIN	Read/write word	2	0x0000
0xD2	PEAK_VOUT	Read/write word	2	0x0000
0xD3	PMON_CONTROL	Read/write byte	1	0x01
0xD4	PMON_CONFIG	Read/write byte	1	0xAF
0xD6	ALERT2_CONFIG	Read/write word	2	0x8000
0xD7	IOUT_WARN2_LIMIT	Read/write word	2	0x0000
0xD8	DEVICE_CONFIG	Read/write byte	1	0x00
0xD9	POWER_CYCLE	Send byte	0	Not applicable
0xDA	PEAK_PIN	Read/write word	2	0x0000
0xDB	READ_PIN_EXT	Block read	1 (byte count) + 3 (data)	0x03, 0x000000
0xDC	READ_EIN_EXT	Block read	1 (byte count) + 8 (data)	0x08, 0x000000, 0x0000, 0x000000

OPERATION

Code: 0x01, read/write byte. Value after reset: 0x80.

Table 10. Bit Descriptions for OPERATION Command

Bits	Bit Name	Settings	Description
[7]	On	0	Hot swap output is disabled.
		1	Default. Hot swap output is enabled.
[6:0]	Reserved	0000000	Always reads as 0000000.

CLEAR_FAULTS

Code: 0x03, send byte, no data.

CAPABILITY

Code: 0x19, read byte. Value after reset: 0xB0.

Table 11. Bit Descriptions for CAPABILITY Command

Bits	Bit Name	Settings	Description
[7]	Packet error checking	1	Always reads as 1. Packet error checking (PEC) is supported.
[6:5]	Maximum bus speed	01	Always reads as 01. Maximum supported bus speed is 400 kHz.
[4]	SMBALERT#	1	Always reads as 1. Device supports SMBAlert and alert response address (ARA).
[3:0]	Reserved	0000	Always reads as 0000.

VOUT_OV_WARN_LIMIT

Code: 0x42, read/write word. Value after reset: 0x0FFF.

Table 12. Bit Descriptions for VOUT_OV_WARN_LIMIT Command

Bits	Bit Name	Settings	Description
[15:12]	Reserved	0000	Always reads as 0000.
[11:0]	VOUT_OV_WARN_LIMIT		Overvoltage threshold for the VOUT pin measurement, expressed in ADC codes.

VOUT_UV_WARN_LIMIT

Code: 0x43, read/write word. Value after reset: 0x0000.

Table 13. Bit Descriptions for VOUT_UV_WARN_LIMIT Command

Bits	Bit Name	Settings	Description
[15:12]	Reserved	0000	Always reads as 0000.
[11:0]	VOUT_UV_WARN_LIMIT		Undervoltage threshold for the VOUT pin measurement, expressed in ADC codes.

IOUT_OC_WARN_LIMIT

Code: 0x4A, read/write word. Value after reset: 0x0FFF.

Table 14. Bit Descriptions for IOUT_OC_WARN_LIMIT Command

Bits	Bit Name	Settings	Description
[15:12]	Reserved	0000	Always reads as 0000.
[11:0]	IOUT_OC_WARN_LIMIT		Overcurrent threshold for the IOUT measurement through the sense resistor, expressed in ADC codes.

IOUT_WARN2_LIMIT

Code: 0xD7, read/write word. Value after reset: 0x0000.

Table 15. Bit Descriptions for IOUT_WARN2_LIMIT Command

Bits	Bit Name	Settings	Description
[15:12]	Reserved	0000	Always reads as 0000.
[11:0]	IOUT_WARN2_LIMIT		Threshold for the IOUT measurement through the sense resistor, expressed in ADC codes. This value can be either an undercurrent or an overcurrent, depending on the state of the IOUT_WARN2_SELECT bit that is set using the DEVICE_CONFIG command.

VIN_OV_WARN_LIMIT

Code: 0x57, read/write word. Value after reset: 0x0FFF.

Table 16. Bit Descriptions for VIN_OV_WARN_LIMIT Command

Bits	Bit Name	Settings	Description
[15:12]	Reserved	0000	Always reads as 0000.
[11:0]	VIN_OV_WARN_LIMIT		Overvoltage threshold for the SENSE+ pin measurement, expressed in ADC codes.

VIN_UV_WARN_LIMIT

Code: 0x58, read/write word. Value after reset: 0x0000.

Table 17. Bit Descriptions for VIN_UV_WARN_LIMIT Command

Bits	Bit Name	Settings	Description
[15:12]	Reserved	0000	Always reads as 0000.
[11:0]	VIN_UV_WARN_LIMIT		Undervoltage threshold for the SENSE+ pin measurement, expressed in ADC codes.

PIN_OP_WARN_LIMIT

Code: 0x6B, read/write word. Value after reset: 0x7FFF.

Table 18. Bit Descriptions for PIN_OP_WARN_LIMIT Command

Bits	Bit Name	Settings	Description
[15]	Reserved	0	Always reads as 0.
[14:0]	PIN_OP_WARN_LIMIT		Overpower threshold for the VIN × IOUT power calculation.

STATUS_BYTE

Code: 0x78, read byte. Value after reset: 0x00.

Table 19. Bit Descriptions for STATUS_BYTE Command

Bits	Bit Name	Behavior	Settings	Description
[7]	Reserved		0	Always reads as 0.
[6]	HOTSWAP_OFF	Live	0	The hot swap gate drive output is enabled.
			1	The hot swap gate drive output is disabled, and the GATE pin is pulled down. This can be due to, for example, an overcurrent fault that causes the ADM1276 to latch off, an undervoltage condition on the UV pin, or the use of the OPERATION command to turn the output off.
[5]	Reserved		0	Always reads as 0.
[4]	IOUT_OC_FAULT	Latched	0	No overcurrent output fault detected.
			1	The hot swap controller detected an overcurrent condition and the time limit set by the capacitor on the TIMER pin has elapsed, causing the hot swap gate drive to shut down.
[3]	VIN_UV_FAULT	Latched	0	No undervoltage input fault detected on the UV pin.
			1	An undervoltage input fault was detected on the UV pin.
[2]	Reserved		0	Always reads as 0.
[1]	CML_ERROR	Latched	0	No communications error detected on the I^2C/PMBus interface.
			1	An error was detected on the I^2C/PMBus interface. Errors detected are an unsupported command, an invalid PEC byte, and an incorrectly structured message.
[0]	NONE_OF_THE_ABOVE	Live	0	No other active status bit to be reported by any other status command.
			1	Active status bits are waiting to be read by one or more status commands.

STATUS_WORD

Code: 0x79, read word. Value after reset: 0x0000.

Table 20. Bit Descriptions for STATUS_WORD Command

Bits	Bit Name	Behavior	Settings	Description
[15]	VOUT_STATUS	Live	0	There are no active status bits to be read by STATUS_VOUT.
			1	There are one or more active status bits to be read by STATUS_VOUT.
[14]	IOUT_STATUS	Live	0	There are no active status bits to be read by STATUS_IOUT.
			1	There are one or more active status bits to be read by STATUS_IOUT.
[13]	INPUT_STATUS	Live	0	There are no active status bits to be read by STATUS_INPUT.
			1	There are one or more active status bits to be read by STATUS_INPUT.
[12]	MFR_STATUS	Live	0	There are no active status bits to be read by STATUS_MFR_SPECIFIC.
			1	There are one or more active status bits to be read by STATUS_MFR_SPECIFIC.
[11]	POWER_GOOD#	Live	0	The voltage on the FLB pin is above the required threshold, indicating that output power is considered good. This bit is the logical inversion of the PWRGD pin on the part.
			1	The voltage on the FLB pin is below the required threshold, indicating that output power is considered bad.
[10:8]	Reserved		000	Always reads as 000.
[7:0]	STATUS_BYTE			This byte is the same as the byte returned by the STATUS_BYTE command.

STATUS_VOUT

Code: 0x7A, read byte. Value after reset: 0x00.

Table 21. Bit Descriptions for STATUS_VOUT Command

Bits	Bit Name	Behavior	Settings	Description
[7]	Reserved		0	Always reads as 0.
[6]	VOUT_OV_WARN	Latched	0	No overvoltage condition on the output supply detected by the power monitor.
			1	An overvoltage condition on the output supply was detected by the power monitor.
[5]	VOUT_UV_WARN	Latched	0	No undervoltage condition on the output supply detected by the power monitor.
			1	An undervoltage condition on the output supply was detected by the power monitor.
[4:0]	Reserved		00000	Always reads as 00000.

STATUS_IOUT

Code: 0x7B, read byte. Value after reset: 0x00.

Table 22. Bit Descriptions for STATUS_IOUT Command

Bits	Bit Name	Behavior	Settings	Description
[7]	IOUT_OC_FAULT	Latched	0	No overcurrent output fault detected.
			1	The hot swap controller detected an overcurrent condition and the time limit set by the capacitor on the TIMER pin has elapsed, causing the hot swap gate drive to shut down.
[6]	Reserved		0	Always reads as 0.
[5]	IOUT_OC_WARN	Latched	0	No overcurrent condition on the output supply detected by the power monitor using the IOUT_OC_WARN_LIMIT command.
			1	An overcurrent condition was detected by the power monitor using the IOUT_OC_WARN_LIMIT command.
[4:0]	Reserved		00000	Always reads as 00000.

STATUS_INPUT

Code: 0x7C, read byte. Value after reset: 0x00.

Table 23. Bit Descriptions for STATUS_INPUT Command

Bits	Bit Name	Behavior	Settings	Description
[7]	VIN_OV_FAULT	Latched	0	No overvoltage detected on the OV pin.
			1	An overvoltage was detected on the OV pin.
[6]	VIN_OV_WARN	Latched	0	No overvoltage condition on the input supply detected by the power monitor.
			1	An overvoltage condition on the input supply was detected by the power monitor.
[5]	VIN_UV_WARN	Latched	0	No undervoltage condition on the input supply detected by the power monitor.
			1	An undervoltage condition on the input supply was detected by the power monitor.
[4]	VIN_UV_FAULT	Latched	0	No undervoltage detected on the UV pin.
			1	An undervoltage was detected on the UV pin.
[3:1]	Reserved		000	Always reads as 000.
[0]	PIN_OP_WARN	Latched	0	No overpower condition on the input supply detected by the power monitor.
			1	An overpower condition on the input supply was detected by the power monitor.

STATUS_MFR_SPECIFIC

Code: 0x80, read byte. Value after reset: 0x00.

Table 24. Bit Descriptions for STATUS_MFR_SPECIFIC Command

Bits	Bit Name	Behavior	Settings	Description
[7]	FET_HEALTH_BAD	Latched	0	FET behavior appears to be as expected.
			1	FET behavior suggests that the FET may be shorted.
[6]	UV_CMP_OUT	Live	0	Input voltage to UV pin is above threshold.
			1	Input voltage to UV pin is below threshold.
[5]	OV_CMP_OUT	Live	0	Input voltage to OV pin is below threshold.
			1	Input voltage to OV pin is above threshold.
[4]	Reserved		0	Always reads as 0.
[3]	HS_INLIM	Latched	0	The ADM1276 has not actively limited the current into the load.
			1	The ADM1276 has actively limited current into the load. This bit differs from the IOUT_OC_FAULT bit in that the HS_INLIM bit is set immediately, whereas the IOUT_OC_FAULT bit is not set unless the time limit set by the capacitor on the TIMER pin elapses.
[2:1]	HS_SHUTDOWN_CAUSE	Latched	00	The ADM1276 is either enabled and working correctly, or has been shut down using the OPERATION command.
			01	An IOUT_OC_FAULT condition occurred that caused the ADM1276 to shut down.
			10	A VIN_UV_FAULT condition occurred that caused the ADM1276 to shut down.
			11	A VIN_OV_FAULT condition occurred that caused the ADM1276 to shut down.
[0]	IOUT_WARN2	Latched	0	No overcurrent condition on the output supply detected by the power monitor using the IOUT_WARN2_LIMIT command.
			1	An undercurrent or overcurrent condition on the output supply was detected by the power monitor using the IOUT_WARN2_LIMIT command. The polarity of the threshold condition is set by the IOUT_WARN2_SELECT bit using the DEVICE_CONFIG command.

READ_EIN

Code: 0x86, block read. Value after reset: 0x06, 0x0000, 0x00, 0x000000.

Table 25. Byte Descriptions for READ_EIN Command

Byte	Byte Name	Value	Description
[0]	Byte count	0x06	Always reads as 0x06, the number of data bytes that the block read command should expect to read.
[2:1]	Energy count	0x0000	Energy accumulator value in direct format. Byte 2 is the high byte, and Byte 1 is the low byte. Internally, the energy accumulator is a 24-bit value, but only the most significant 16 bits are returned with this command. Use the READ_EIN_EXT command to access the nontruncated version.
[3]	Rollover count	0x00	Number of times that the energy count has rolled over from 0x7FFF to 0x0000. This is a straight 8-bit binary value.
[6:4]	Sample count	0x000000	This is the total number of PIN samples acquired and accumulated in the energy count accumulator. Byte 6 is the high byte, Byte 5 is the middle byte, and Byte 4 is the low byte. This is a straight 24-bit binary value.

READ_VIN

Code: 0x88, read word. Value after reset: 0x0000.

Table 26. Bit Descriptions for READ_VIN Command

Bits	Bit Name	Settings	Description
[15:12]	Reserved	0000	Always reads as 0000.
[11:0]	VIN		Input voltage from the SENSE+ pin measurement, expressed in ADC codes.

READ_VOUT

Code: 0x8B, read word. Value after reset: 0x0000.

Table 27. Bit Descriptions for READ_VOUT Command

Bits	Bit Name	Settings	Description
[15:12]	Reserved	0000	Always reads as 0000.
[11:0]	VOUT		Output voltage from the VOUT pin measurement, expressed in ADC codes.

READ_IOUT

Code: 0x8C, read word. Value after reset: 0x0000.

Table 28. Bit Descriptions for READ_IOUT Command

Bits	Bit Name	Settings	Description
[15:12]	Reserved	0000	Always reads as 0000.
[11:0]	IOUT		Output current from the measurement through the sense resistor, expressed in ADC codes.

READ_PIN

Code: 0x97, read word. Value after reset: 0x0000.

Table 29. Bit Descriptions for READ_PIN Command

Bits	Bit Name	Settings	Description
[15]	Reserved	0	Always reads as 0.
[14:0]	PIN		Input power from the VIN × IOUT calculation.

PMBUS_REVISION

Code: 0x98, read byte. Value after reset: 0x22.

Table 30. Bit Descriptions for PMBUS_REVISION Command

Bits	Bit Name	Settings	Description
[7:4]	Part I revision	0010	Always reads as 0010, PMBus Specification Part I, Revision 1.2.
[3:0]	Part II revision	0010	Always reads as 0010, PMBus Specification Part II, Revision 1.2.

MFR_ID

Code: 0x99, block read. Value after reset: 0x03 + ASCII "ADI."

Table 31. Byte Descriptions for MFR_ID Command

Byte	Byte Name	Value	Description
[0]	Byte count	0x03	Always reads as 0x03, the number of data bytes that the block read command expects to read.
[1]	Character 1	0x41 or "A"	Always reads as 0x41.
[2]	Character 2	0x44 or "D"	Always reads as 0x44.
[3]	Character 3	0x49 or "I"	Always reads as 0x49.

MFR_MODEL

Code: 0x9A, block read. Value after reset: 0x09 + ASCII "ADM1276-3."

Table 32. Byte Descriptions for MFR_MODEL Command

Byte	Byte Name	Value	Description
[0]	Byte count	0x09	Always reads as 0x09, the number of data bytes that the block read command expects to read.
[1]	Character 1	0x41 or "A"	Always reads as 0x41.
[2]	Character 2	0x44 or "D"	Always reads as 0x44.
[3]	Character 3	0x4D or "M"	Always reads as 0x4D.
[4]	Character 4	0x31 or "1"	Always reads as 0x31.
[5]	Character 5	0x32 or "2"	Always reads as 0x32.
[6]	Character 6	0x37 or "7"	Always reads as 0x37.
[7]	Character 7	0x36 or "6"	Always reads as 0x36.
[8]	Character 8	0x2D or "–"	Always reads as 0x2D.
[9]	Character 9	0x33 or "3"	Always reads as 0x33.

MFR_REVISION

Code: 0x9B, block read. Value after reset: 0x01 + ASCII "0."

Table 33. Byte Descriptions for MFR_REVISION Command

Byte	Byte Name	Value	Description
[0]	Byte count	0x01	Always reads as 0x01, the number of data bytes that the block read command expects to read.
[1]	Character 1	0x30 or "0"	Always reads as 0x30, Revision 0 of the ADM1276.

PEAK_IOUT

Code: 0xD0, read/write word. Value after reset: 0x0000 (writing 0x0000 clears the peak value).

Table 34. Bit Descriptions for PEAK_IOUT Command

Bits	Bit Name	Settings	Description
[15:12]	Reserved	0000	Always reads as 0000.
[11:0]	PEAK_IOUT		Returns the peak IOUT current since the register was last cleared.

PEAK_VIN

Code: 0xD1, read/write word. Value after reset: 0x0000 (writing 0x0000 clears the peak value).

Table 35. Bit Descriptions for PEAK_VIN Command

Bits	Bit Name	Settings	Description
[15:12]	Reserved	0000	Always reads as 0000.
[11:0]	PEAK_VIN		Returns the peak VIN voltage since the register was last cleared.

PEAK_VOUT

Code: 0xD2, read/write word. Value after reset: 0x0000 (writing 0x0000 clears the peak value).

Table 36. Bit Descriptions for PEAK_VOUT Command

Bits	Bit Name	Settings	Description
[15:12]	Reserved	0000	Always reads as 0000.
[11:0]	PEAK_VOUT		Returns the peak VOUT voltage since the register was last cleared.

PMON_CONTROL

Code: 0xD3, read/write byte. Value after reset: 0x01.

Table 37. Bit Descriptions for PMON_CONTROL Command

Bits	Bit Name	Settings	Description
[7:1]	Reserved	0000000	Always reads as 0000000.
[0]	Convert	0	Power monitor is not running.
		1	Default. Start the sampling of current and voltage with the power monitor. In single shot mode, this bit clears itself after one complete cycle. In continuous mode, this bit must be written to 0 to stop sampling.

PMON_CONFIG

Code: 0xD4, read/write byte. Value after reset: 0xAF.

Modifying the power monitor settings while the power monitor is sampling is not supported. The power monitor must be stopped before any setting in Table 38 is changed to ensure correct operation and to prevent the generation of any potential spurious data and status alerts.

Table 38. Bit Descriptions for PMON_CONFIG Command

Bits	Bit Name	Settings	Description
[7]	PMON_MODE	0	This setting selects single shot sampling mode.
		1	Default. This setting selects continuous sampling mode.
[6]	VOUT_SELECT	0	Default. The power monitor samples the input voltage on the SENSE+ pin and IOUT.
		1	The power monitor samples the input voltage on the SENSE+ pin, IOUT, and the voltage on the VOUT pin.
[5]	VRANGE	0	Sets the voltage input range from 0 V to 6 V (low input voltage range).
		1	Default. Sets the voltage input range from 0 V to 20 V (high input voltage range).
[4]	Reserved	0	Reserved. This bit must always be written as 0.
[3]	Reserved	1	Default. This bit must be set to 1 for the power monitor current sense to operate correctly.
[2:0]	Averaging	000	Disables sample averaging for current and voltage.
		001	Sets sample averaging for current and voltage to two samples.
		010	Sets sample averaging for current and voltage to four samples.
		011	Sets sample averaging for current and voltage to eight samples.
		100	Sets sample averaging for current and voltage to 16 samples.
		101	Sets sample averaging for current and voltage to 32 samples.
		110	Sets sample averaging for current and voltage to 64 samples.
		111	Default. Sets sample averaging for current and voltage to 128 samples.

ALERT2_CONFIG

Code: 0xD6, read/write word. Value after reset: 0x8000.

Table 39. Bit Descriptions for ALERT2_CONFIG Command

Bits	Bit Name	Settings	Description
[15]	FET_HEALTH_BAD_EN2	0	Disables generation of an SMBAlert when the FET_HEALTH_BAD bit is set.
		1	Default. Generates SMBAlert when the FET_HEALTH_BAD bit is set. This bit is active from power-up for a FET problem to be detected and flagged immediately without the need for software to set this bit.
[14]	IOUT_OC_FAULT_EN2	0	Default. Disables generation of an SMBAlert when the IOUT_OC_FAULT bit is set.
		1	Generates an SMBAlert when the IOUT_OC_FAULT bit is set.
[13]	VIN_OV_FAULT_EN2	0	Default. Disables generation of an SMBAlert when the VIN_OV_FAULT bit is set.
		1	Generates an SMBAlert when the VIN_OV_FAULT bit is set.
[12]	VIN_UV_FAULT_EN2	0	Default. Disables generation of an SMBAlert when the VIN_UV_FAULT bit is set.
		1	Generates an SMBAlert when the VIN_UV_FAULT bit is set.
[11]	CML_ERROR_EN2	0	Default. Disables generation of an SMBAlert when the CML_ERROR bit is set.
		1	Generates an SMBAlert when the CML_ERROR bit is set.
[10]	IOUT_OC_WARN_EN2	0	Default. Disables generation of an SMBAlert when the IOUT_OC_WARN bit is set.
		1	Generates an SMBAlert when the IOUT_OC_WARN bit is set.
[9]	IOUT_WARN2_EN2	0	Default. Disables generation of an SMBAlert when the IOUT_WARN2 bit is set.
		1	Generates an SMBAlert when the IOUT_WARN2 bit is set.
[8]	VIN_OV_WARN_EN2	0	Default. Disables generation of an SMBAlert when the VIN_OV_WARN bit is set.
		1	Generates an SMBAlert when the VIN_OV_WARN bit is set.
[7]	VIN_UV_WARN_EN2	0	Default. Disables generation of an SMBAlert when the VIN_UV_WARN bit is set.
		1	Generates an SMBAlert when the VIN_UV_WARN bit is set.
[6]	VOUT_OV_WARN_EN2	0	Default. Disables generation of an SMBAlert when the VOUT_OV_WARN bit is set.
		1	Generates an SMBAlert when the VOUT_OV_WARN bit is set.
[5]	VOUT_UV_WARN_EN2	0	Default. Disables generation of an SMBAlert when the VOUT_UV_WARN bit is set.
		1	Generates an SMBAlert when the VOUT_UV_WARN bit is set.
[4]	HS_INLIM_EN2	0	Default. Disables generation of an SMBAlert when the HS_INLIM bit is set.
		1	Generates an SMBAlert when the HS_INLIM bit is set.
[3]	PIN_OP_WARN_EN2	0	Default. Disables generation of an SMBAlert when the PIN_OP_WARN bit is set.
		1	Generates an SMBAlert when the PIN_OP_WARN bit is set.
[2:1]	GPO2_MODE	00	Default. GPO2 is configured to generate SMBAlerts.
		01	GPO2 can be used as a general-purpose digital output pin. The GPO2_INVERT bit is used to change the output state.
		10	Reserved.
		11	GPO2 is configured for digital comparator mode. The output pin continuously shows for the selected warning(s) if the relevant warning threshold has been exceeded. In effect, this is an unlatched SMBAlert. If multiple bits are selected, the output values are OR'ed together. Only warning threshold comparisons affect the pin in this mode. If other bits such as VIN_UV_FAULT_EN2 are set, they are ignored in this mode of operation.
[0]	GPO2_INVERT	0	Default. The GPO2 pin is active low.
		1	GPO2 is active high.

DEVICE_CONFIG

Code: 0xD8, read/write byte. Value after reset: 0x00.

Table 40. Bit Descriptions for DEVICE_CONFIG Command

Bits	Bit Name	Settings	Description
[7]	OC_GLITCH_TIME	0	Default. The long duration glitch filter is used when a severe overcurrent fault is detected.
		1	The short duration glitch filter is used when a severe overcurrent fault is detected.
[6]	FLB_DISABLE	0	Default. Foldback is enabled and can affect the hot swap current sense limit.
		1	Foldback is disabled and does not affect the hot swap current sense limit. This setting can be useful if the sole purpose of the FLB pin is to act as a power-good input.
[5]	OPERATION_CMD_EN	0	Default. The OPERATION command is disabled, and the ADM1276 issues a no acknowledge if the command is received. This setting provides some protection against a card accidentally turning itself off.
		1	The OPERATION command is enabled, and the ADM1276 responds to it.
[4]	IOUT_WARN2_SELECT	0	Default. Configures IOUT_WARN2_LIMIT as an undercurrent threshold.
		1	Configures IOUT_WARN2_LIMIT as an overcurrent threshold.
[3:0]	Reserved	0000	Always reads as 0000.

POWER_CYCLE

Code: 0xD9, send byte, no data.

PEAK_PIN

Code: 0xDA, read/write word. Value after reset: 0x0000 (writing 0x0000 clears the peak value).

Table 41. Bit Descriptions for PEAK_PIN Command

Bits	Bit Name	Settings	Description
[15]	Reserved	0	Always reads as 0.
[14:0]	PEAK_PIN		Returns the peak input power since the register was last cleared.

READ_PIN_EXT

Code: 0xDB, block read. Value after reset: 0x03, 0x000000.

Table 42. Byte Descriptions for READ_PIN_EXT Command

Byte	Byte Name	Value	Description
[0]	Byte count	0x03	Always reads as 0x03, the number of data bytes that the block read command expects to read.
[3:1]	PIN extended	0x000000	Result of the VIN × IOUT calculation that has not been truncated. Byte 3 is the high byte, Byte 2 is the middle byte, and Byte 1 is the low byte.

READ_EIN_EXT

Code: 0xDC, block read. Value after reset: 0x08, 0x000000, 0x0000, 0x000000.

Table 43. Byte Descriptions for READ_EIN_EXT Command

Byte	Byte Name	Value	Description
[0]	Byte count	0x08	Always reads as 0x08, the number of data bytes that the block read command expects to read.
[3:1]	Energy count extended	0x000000	24-bit energy accumulator in direct format. Byte 3 is the high byte, Byte 2 is the middle byte, and Byte 1 is the low byte.
[5:4]	Rollover count extended	0x0000	Number of times that the energy counter has rolled over from 0x7FFF to 0x0000. This is a straight 16-bit binary value. Byte 5 is the high byte, and Byte 4 is the low byte.
[8:6]	Sample count	0x000000	Total number of PIN samples acquired and accumulated in the energy count accumulator. Byte 8 is the high byte, Byte 7 is the middle byte, and Byte 6 is the low byte.

OUTLINE DIMENSIONS

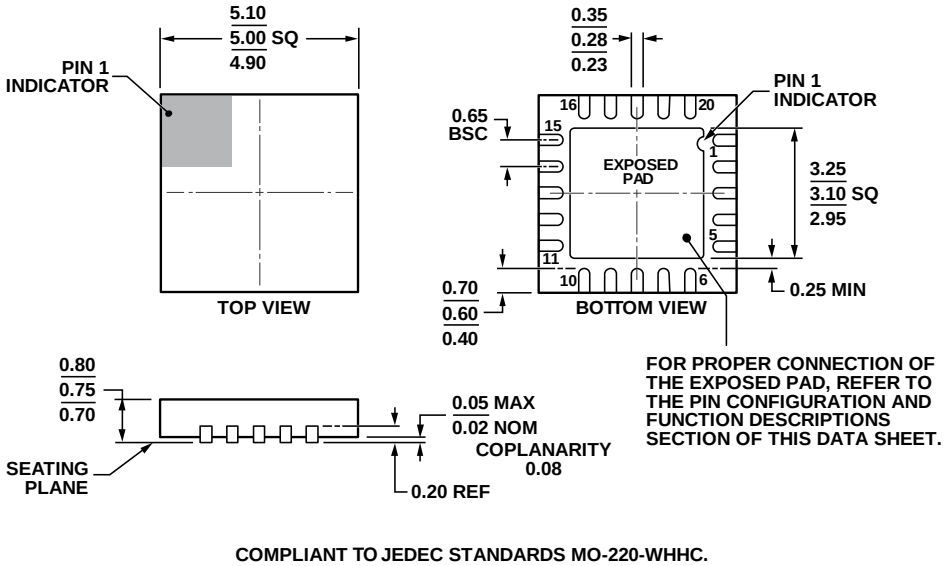

COMPLIANT TO JEDEC STANDARDS MO-220-WHHC.

Figure 61. 20-Lead Lead Frame Chip Scale Package [LFCSP_WQ]
5 mm × 5 mm Body, Very Very Thin Quad
(CP-20-9)
Dimensions shown in millimeters

ORDERING GUIDE

Model[1]	Temperature Range	Package Description	Package Option
ADM1276-3ACPZ	−40°C to +85°C	20-Lead LFCSP_WQ	CP-20-9
ADM1276-3ACPZ-RL	−40°C to +85°C	20-Lead LFCSP_WQ	CP-20-9
EVAL-ADM1276EBZ		Evaluation Kit	

[1] Z = RoHS Compliant Part.

NOTES

NOTES

NOTES

I²C refers to a communications protocol originally developed by Philips Semiconductors (now NXP Semiconductors).

©2011–2013 Analog Devices, Inc. All rights reserved. Trademarks and registered trademarks are the property of their respective owners.
D09718-0-11/13(C)