2.5 GHz to 2.7 GHz WiMAX Power Amplifier

ADL5571

FEATURES

Gain: 29 dB
Operation from 2.5 GHz to 2.7 GHz
EVM ≤ 3% with 16 QAM OFDMA
@ P_{OUT} = 25 dBm (3.3 V, 2.6 GHz)
@ P_{OUT} = 27 dBm (5 V, 2.6 GHz)
Input matched to 50 Ω
Power supply: 3.2 V to 5 V
Quiescent current: 135 mA
Power-added efficiency (PAE)
21% @ P_{OUT} = 25 dBm (3.3 V, 2.6 GHz)
Multiple operating modes to reduce battery drain
Standby mode: 9 mA
Sleep mode: <1 µA

APPLICATIONS

WiMAX mobile terminals and CPEs

GENERAL DESCRIPTION

The ADL5571 is a high linearity 2.5 GHz to 2.7 GHz power amplifier designed for WiMAX mobile terminals and CPEs using TDD operation at a duty cycle of 50% or lower. With a gain of 29 dB and an output compression point of 31 dBm, it can operate at an output power level up to 27 dBm while maintaining an EVM of ≤3% with a supply voltage of 5 V. PAE is 21% at P_{OUT} = 25 dBm with a 3.3 V supply voltage.

The ADL5571 RF input is matched to provide an input return loss of better than 10 dB. The open-collector output is externally matched with a microstrip line and an external shunt capacitor.

The ADL5571 operates over a supply voltage range from 3.2 V to 5 V with a current of 450 mA burst rms when delivering 25 dBm (3.3 V supply). A standby mode is available that reduces the quiescent current to 9 mA, which is useful when a TDD terminal is receiving data.

The ADL5571 is fabricated in a GaAs HBT process and is packaged in a 4 mm × 4 mm, 16-lead, Pb-free, RoHS-compliant LFCSP that uses an exposed paddle for excellent thermal impedance. It operates from −40°C to +85°C.

FUNCTIONAL BLOCK DIAGRAM

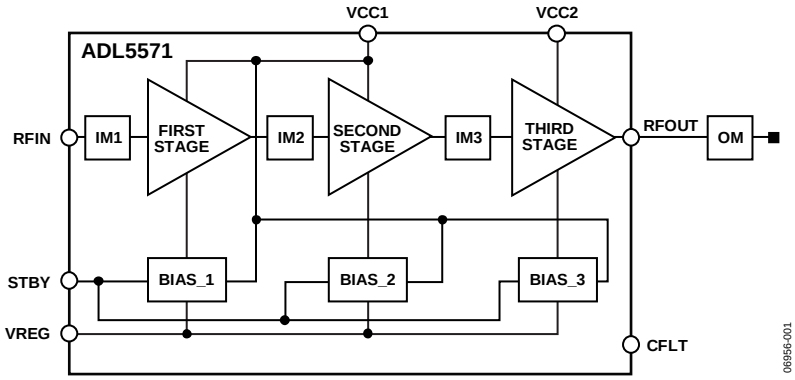

Figure 1.

Rev. 0
Information furnished by Analog Devices is believed to be accurate and reliable. However, no responsibility is assumed by Analog Devices for its use, nor for any infringements of patents or other rights of third parties that may result from its use. Specifications subject to change without notice. No license is granted by implication or otherwise under any patent or patent rights of Analog Devices. Trademarks and registered trademarks are the property of their respective owners.

One Technology Way, P.O. Box 9106, Norwood, MA 02062-9106, U.S.A.
Tel: 781.329.4700 **www.analog.com**
Fax: 781.461.3113 **©2008 Analog Devices, Inc. All rights reserved.**

TABLE OF CONTENTS

Features 1
Applications 1
General Description 1
Functional Block Diagram 1
Revision History 2
Specifications 3
V_{CC} = 3.3 V 3
V_{CC} = 5 V 4
Absolute Maximum Ratings 5
ESD Caution 5
Pin Configuration and Function Descriptions 6
Typical Performance Characteristics 7
V_{CC} = 3.3 V 7
V_{CC} = 5 V 9
Applications Information 11
Basic Connections 11
64 QAM OFDMA Performance 12
Power-Added Efficiency 12
Evaluation Board 13
Measurement Setup 14
Outline Dimensions 15
Ordering Guide 15

REVISION HISTORY

1/08—Revision 0: Initial Version

SPECIFICATIONS

V_{CC} = 3.3 V

T = 25°C, 1024 FFT, 16 QAM OFDMA modulated carrier, 10 MHz channel BW, f = 2.6 GHz, Z_L = 50 Ω, STBY = 0 V, VREG = 2.85 V, 31% duty cycle, ACPR integration BW = 100 kHz (5.05 MHz offset) or 1 MHz (6.5 MHz, 11 MHz, 15 MHz, and 20.5 MHz offset), unless otherwise noted.

Table 1.

Parameter	Conditions	Min	Typ	Max	Unit
FREQUENCY RANGE	See Table 5 for tuning details	2.5		2.7	GHz
LINEAR OUTPUT POWER	EVM ≤ 3%		25		dBm
GAIN			29		dB
vs. Frequency	±5 MHz		±0.2		dB
vs. Temperature	−40°C ≤ T_A ≤ +85°C		±2		dB
vs. Supply	3.2 V to 4.2 V		±0.3		dB
OUTPUT P1dB	Unmodulated pulse input		31		dBm
EVM	P_{OUT} = 25 dBm		3		% rms
INPUT RETURN LOSS			20		dB
ACPR	P_{OUT} = 25 dBm				
	±5.05 MHz carrier offset		−27		dBm
	±6.5 MHz carrier offset		−19		dBm
	±11 MHz carrier offset		−24		dBm
	±15 MHz carrier offset		−30		dBm
	±20.5 MHz carrier offset		−39		dBm
HARMONIC DISTORTION			45		dBc
SUPPLY CURRENT	P_{OUT} = 25 dBm		450		mA
QUIESCENT CURRENT	No signal at RF input		135		mA
PAE	P_{OUT} = 25 dBm		21		%
STANDBY MODE CURRENT	VREG = 2.85 V, STBY = 2.5 V		9		mA
SLEEP MODE CURRENT	VREG = 0 V		<1		µA
TURN-ON/-OFF TIME			1		µs
VSWR SURVIVABILITY		10:1			

V_{CC} = 5 V

T = 25°C, 1024 FFT, 16 QAM OFDMA modulated carrier, 10 MHz channel BW, f = 2.6 GHz, Z_L = 50 Ω, STBY = 0 V, VREG = 2.85 V, 31% duty cycle, ACPR integration BW = 100 kHz (5.05 MHz offset) or 1 MHz (6.5 MHz, 11 MHz, 15 MHz, and 20.5 MHz offset), unless otherwise noted.

Table 2.

Parameter	Conditions	Min	Typ	Max	Unit
FREQUENCY RANGE	See Table 5 for tuning details	2.5		2.7	GHz
LINEAR OUTPUT POWER	EVM ≤ 3%		27		dBm
GAIN			27.5		dB
vs. Frequency	±5 MHz		±0.1		dB
vs. Temperature	−40°C ≤ T_A ≤ +85°C		±2.5		dB
vs. Supply	4.5 V to 5.5 V		±0.2		dB
OUTPUT P1dB	Unmodulated input		32		dBm
EVM	P_{OUT} = 27 dBm		3		% rms
INPUT RETURN LOSS	P_{OUT} = 27 dBm		16		dB
ACPR	P_{OUT} = 26.5 dBm				
	±5.05 MHz carrier offset		−28		dBm
	±6.5 MHz carrier offset		−21		dBm
	±11 MHz carrier offset		−26		dBm
	±15 MHz carrier offset		−29		dBm
	±20.5 MHz carrier offset		−35		dBm
HARMONIC DISTORTION	P_{OUT} = 27 dBm		47		dBc
SUPPLY CURRENT	P_{OUT} = 27 dBm		620		mA
QUIESCENT CURRENT	No signal at RF input		135		mA
PAE	P_{OUT} = 27 dBm		16		%
STANDBY MODE CURRENT	VREG = 2.85 V, STBY = 2.5 V		9		mA
SLEEP MODE CURRENT	VREG = 0 V		<1		µA
TURN-ON/-OFF TIME			1		µs
VSWR SURVIVABILITY		10:1			

ABSOLUTE MAXIMUM RATINGS

Table 3.

Parameter	Rating
Supply Voltage	
V_{CC}	5.0 V
VREG	3 V
STBY	3 V
RFOUT (Modulated—Normal Power Mode)[1]	29 dBm
Output Load VSWR	10:1
Operating Temperature Range	−40°C to +85°C
Storage Temperature Range	−65°C to +150°C
Maximum Solder Reflow Temperature	260°C (30 sec)

[1] OFDMA carrier, 16 QAM, 10 MHz channel BW, 1024 FFT.

Stresses above those listed under Absolute Maximum Ratings may cause permanent damage to the device. This is a stress rating only; functional operation of the device at these or any other conditions above those indicated in the operational section of this specification is not implied. Exposure to absolute maximum rating conditions for extended periods may affect device reliability.

ESD CAUTION



ESD (electrostatic discharge) sensitive device. Charged devices and circuit boards can discharge without detection. Although this product features patented or proprietary protection circuitry, damage may occur on devices subjected to high energy ESD. Therefore, proper ESD precautions should be taken to avoid performance degradation or loss of functionality.

PIN CONFIGURATION AND FUNCTION DESCRIPTIONS

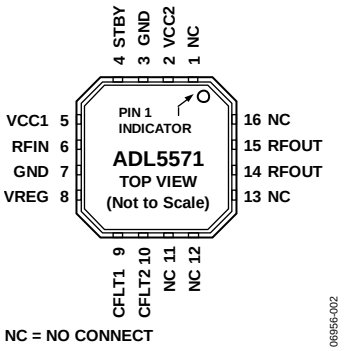

Figure 2. Pin Configuration

Table 4. Pin Function Descriptions

Pin No.	Mnemonic	Description
1, 11, 12, 13, 16	NC	No Connect. Do not connect these pins.
2	VCC2	This power supply pin should be connected to the supply via a choke circuit (see Figure 19).
3, 7	GND	Connected to Ground.
4	STBY	When STBY is low (0 V), the device operates in transmit mode. When the radio is receiving data, STBY can be taken high (2.5 V), reducing the supply current to 9 mA.
5	VCC1	Connect to Power Supply.
6	RFIN	RF Input.
8	VREG	When VREG is low, the device goes into sleep mode, reducing the supply current to less than 1 µA. When VREG is high (2.85 V), the device operates in its normal transmit mode. When high, VREG draws a bias current of approximately 9 mA.
9, 10	CFLT1, CFLT2	Ground-Referenced Capacitors. These should be connected to reduce bias line noise.
14, 15	RFOUT	Unmatched RF Outputs. These parallel outputs are matched to 50 Ω using a microstrip line and shunt capacitor. The power supply voltage should be connected to these pins through a choke inductor.
	Exposed Paddle	The exposed paddle should be soldered down to a low impedance ground plane (use multiple vias, at least 9, to stitch together the ground planes) for optimum electrical and thermal performance.

Table 5. Operating Modes[1]

Mnemonic	Normal Operation	Standby Mode	Sleep Mode
VREG	High	High	Low
STBY	Low	High	X

[1] X = don't care.

TYPICAL PERFORMANCE CHARACTERISTICS

V_{CC} = 3.3 V

T = 25°C, 1024 FFT, 16 QAM OFDMA modulated carrier, 10 MHz channel BW, Z_L = 50 Ω, STBY = 0 V, VREG = 2.85 V, 31% duty cycle, ACPR integration BW = 100 kHz (5.05 MHz offset) or 1 MHz (6.5 MHz, 11 MHz, 15 MHz, and 20.5 MHz offset), unless otherwise noted.

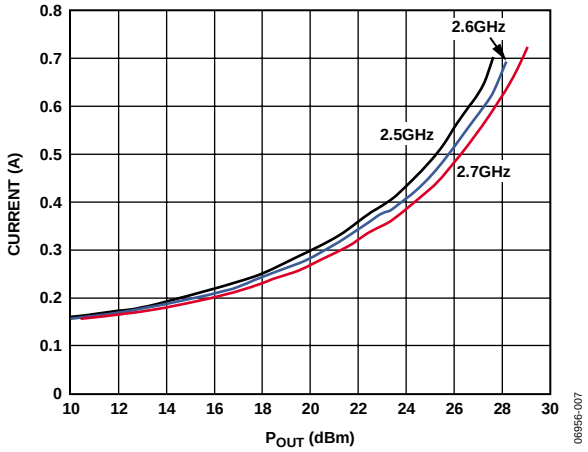

Figure 3. Burst RMS Current vs. P_{OUT} at 2.5 GHz, 2.6 GHz, and 2.7 GHz

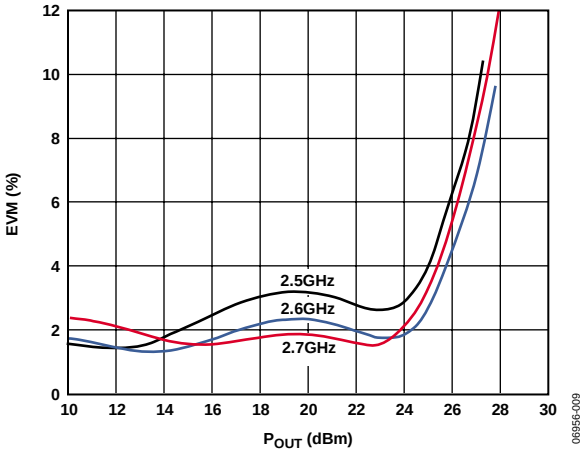

Figure 5. EVM vs. P_{OUT} at 2.5 GHz, 2.6 GHz, and 2.7 GHz

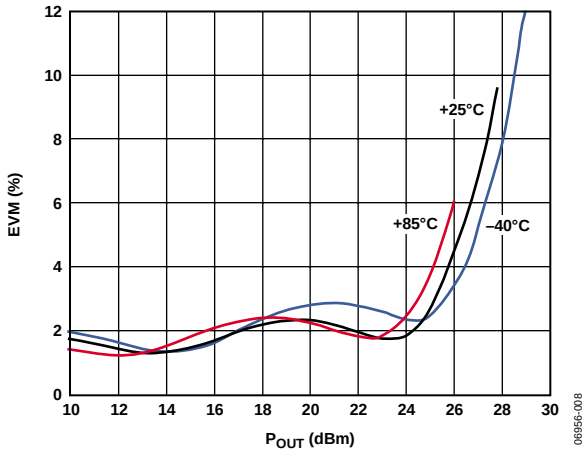

Figure 4. EVM vs. P_{OUT} at 2.6 GHz, Temperatures –40°C, +25°C, and +85°C

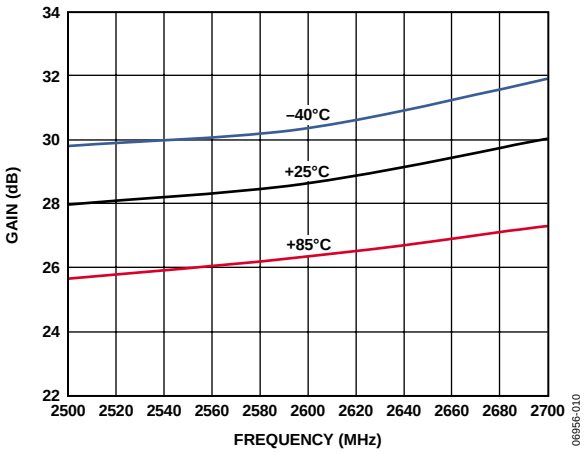

Figure 6. Gain vs. Frequency at P_{OUT} = 25 dBm, Temperatures –40°C, +25°C, and +85°C

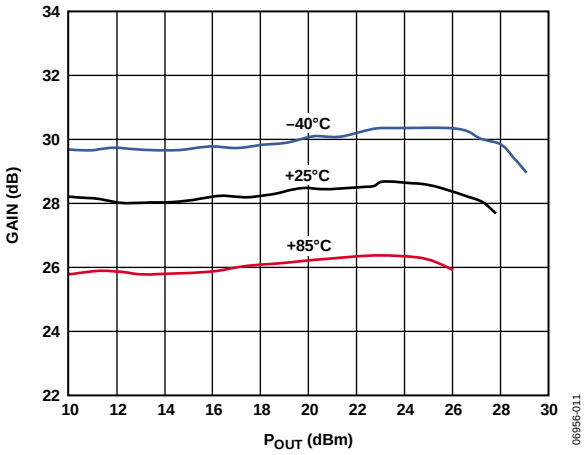

Figure 7. Gain vs. P_{OUT} at 2.6 GHz, Temperatures −40°C, +25°C, and +85°C

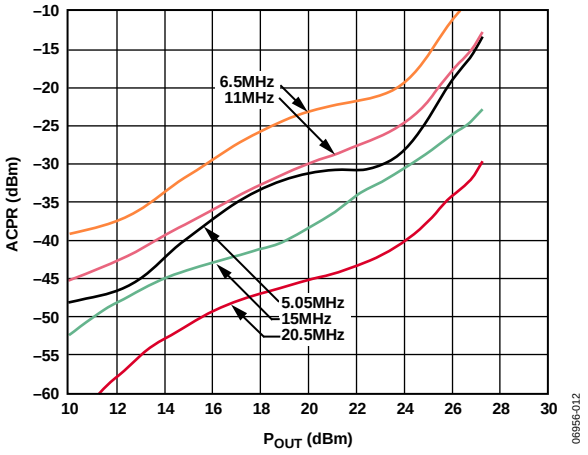

Figure 8. ACPR Measurement at 2.5 GHz

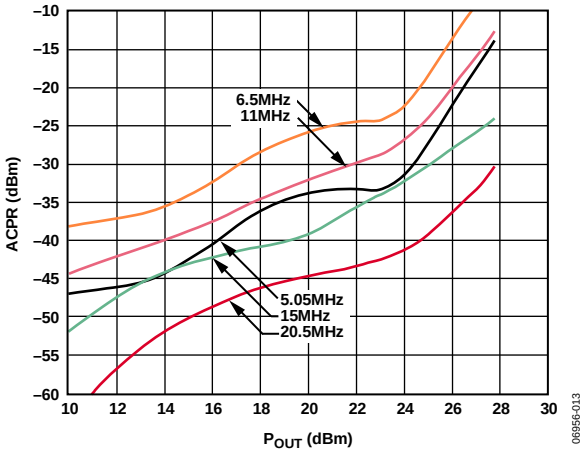

Figure 9. ACPR Measurement at 2.6 GHz

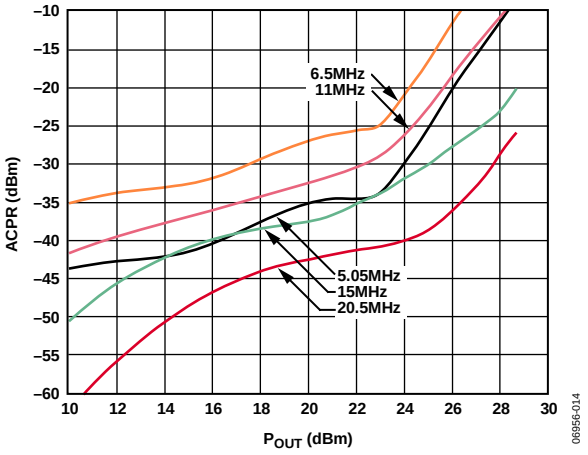

Figure 10. ACPR Measurement at 2.7 GHz

V_{CC} = 5 V

T = 25°C, 1024 FFT, 16 QAM OFDMA modulated carrier, 10 MHz channel BW, Z_L = 50 Ω, STBY = 0 V, VREG = 2.85 V, 31% duty cycle, ACPR integration BW = 100 kHz (5.05 MHz offset) or 1 MHz (6.5 MHz, 11 MHz, 15 MHz, and 20.5 MHz offset), unless otherwise noted.

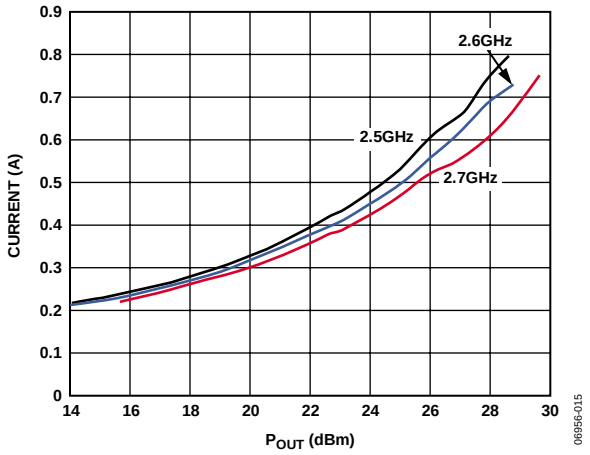

Figure 11. Burst RMS Current vs. P_{OUT} at 2.5 GHz, 2.6 GHz, and 2.7 GHz

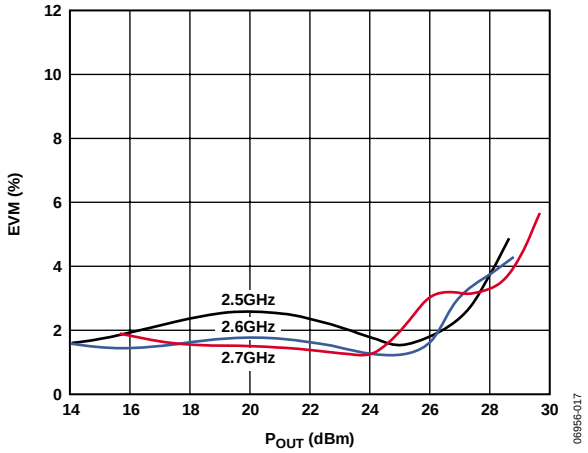

Figure 13. EVM vs. P_{OUT} at 2.5 GHz, 2.6 GHz, and 2.7 GHz

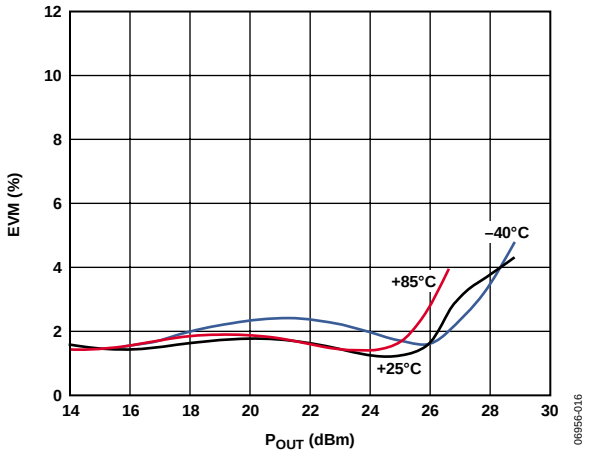

Figure 12. EVM vs. P_{OUT} at 2.6 GHz, Temperatures −40°C, +25°C, and +85°C

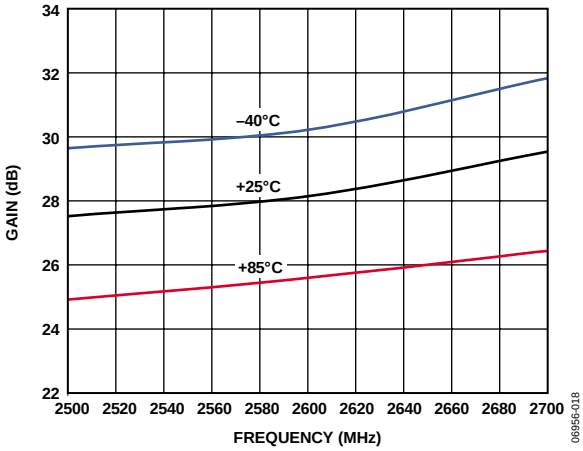

Figure 14. Gain vs. Frequency at P_{OUT} = 25 dBm, Temperatures −40°C, +25°C, and +85°C

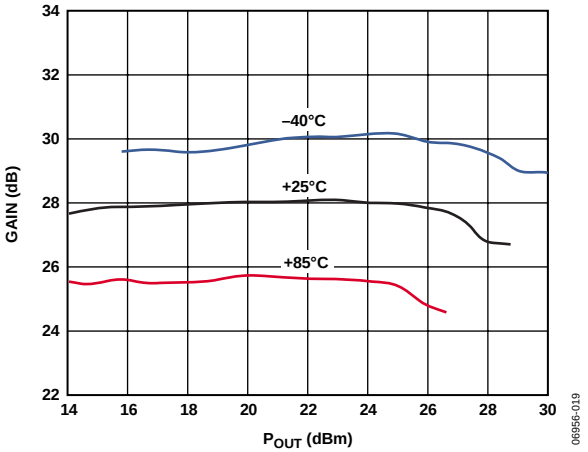

Figure 15. Gain vs. P_{OUT} at 2.6 GHz, Temperatures −40°C, +25°C, and +85°C

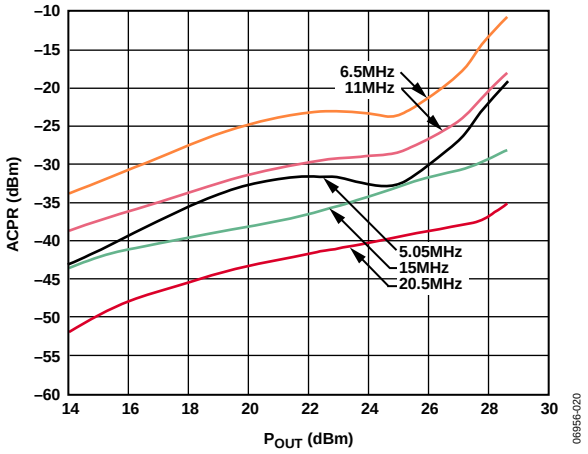

Figure 16. ACPR Measurement at 2.5 GHz

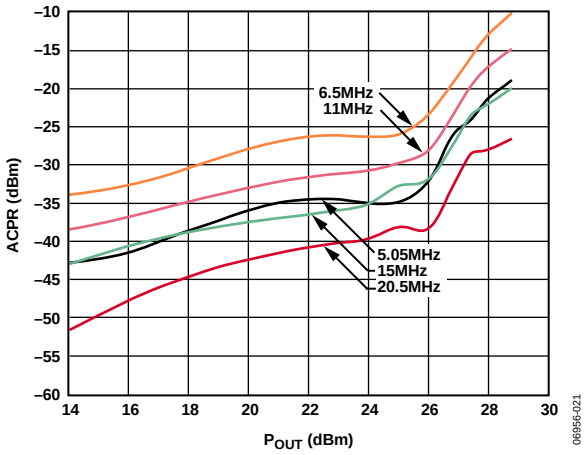

Figure 17. ACPR Measurement at 2.6 GHz

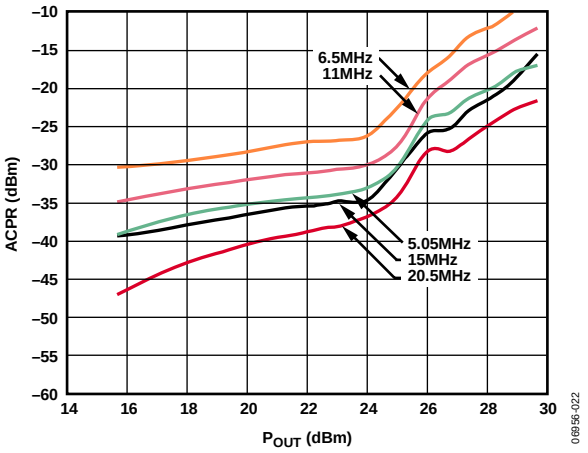

Figure 18. ACPR Measurement at 2.7 GHz

APPLICATIONS INFORMATION

BASIC CONNECTIONS

Figure 19 shows the basic connections for the ADL5571.

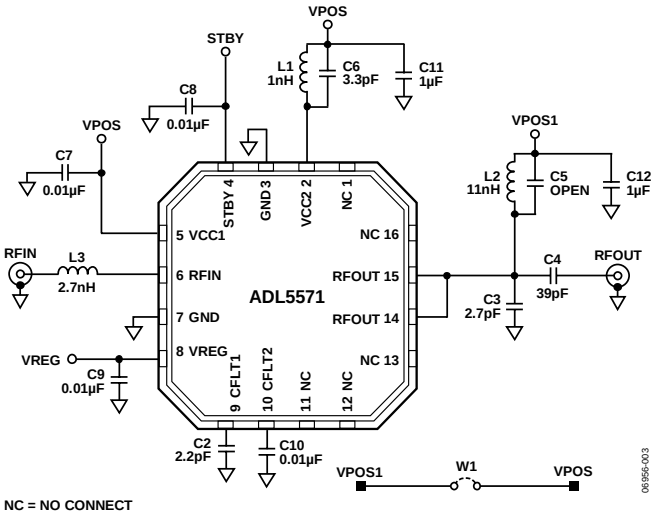

Figure 19. Basic Connections

Power Supply

The voltage supply on the ADL5571, which ranges from 3.2 V to 4.2 V, should be connected to the VCCx pins. VCC1 is decoupled with Capacitor C7, whereas VCC2 uses a tank circuit to prevent RF signals from propagating on the dc lines.

RF Input Interface

The RFIN pin is the port for the RF input signal to the power amplifier. The L3 inductor, 2.7 nH, matches the input impedance to 50 Ω.

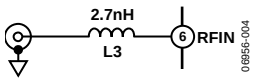

Figure 20. RF Input with Matching Component

RF Output Interface

The parallel RF output ports have a shunt capacitor, C3 (2.7 pF), and the line inductance of the microstrip line for optimized output power and linearity. The characteristics of the ADL5571 are described for 50 Ω impedance after the output matching capacitor (load after C3). C4 provides dc blocking on the RF output.

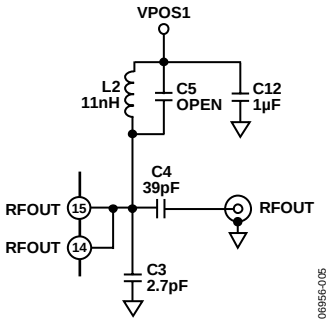

Figure 21. RF Output

Transmit/Standby Enable

During normal transmit mode, the STBY pin is biased low (0 V). However, during receive mode, the pin can be biased high (2.5 V) to shift the device into standby mode, which reduces current consumption to 9 mA.

VREG Enable

During normal transmit, the VREG pin is biased to 2.85 V and draws 9 mA of current. When the VREG pin is low (0 V), the device suspends itself into sleep mode (irrespective of supply biasing). In this mode, the device draws less than 1 µA of current.

64 QAM OFDMA PERFORMANCE

The ADL5571 shows exceptional performance when used with a higher order modulation scheme, such as a 64 QAM system. Figure 22, Figure 23, and Figure 24 illuminate the EVM, gain, and current consumption performance within the context of a 64 QAM OFDMA system.

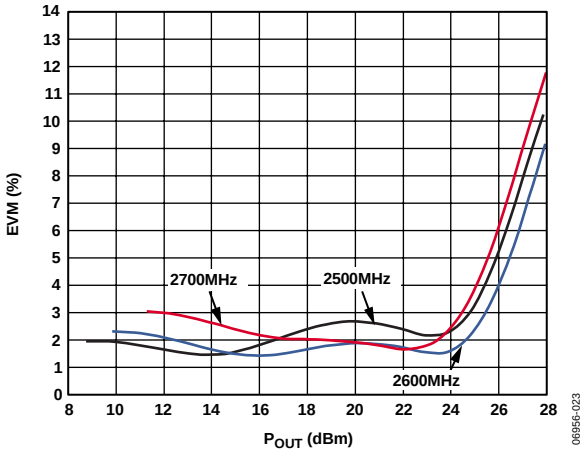

Figure 22. EVM vs. P_{OUT} Performance at V_{CC} = 3.3 V and 64 QAM OFDMA Signal

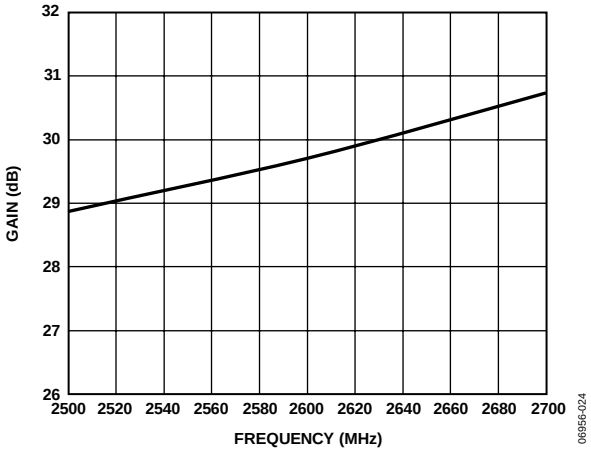

Figure 23. Gain vs. Frequency Performance at V_{CC} = 3.3 V and 64 QAM OFDMA Signal

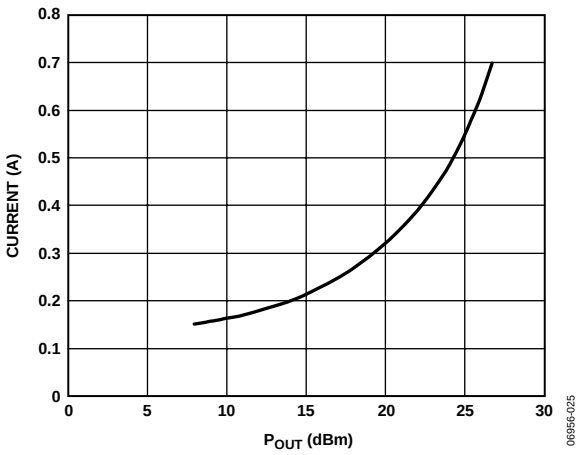

Figure 24. Burst Current vs. P_{OUT} at V_{CC} = 3.3 V, 64 QAM, 2350 MHz, 31% 802.16e OFDMA Signal

POWER-ADDED EFFICIENCY

The efficiency of the ADL5571 is defined on the current that it draws during the data burst of an 802.16e OFDMA signal. In typical test setup, the average rms current, I_{AVG}, is measured. However,

$$I_{AVG} = Duty\ Cycle\ (\text{in decimal}) \times I_{BURST} + (1 - Duty\ Cycle\ [\text{in decimal}]) \times I_{DEFAULT}$$

where:

I_{BURST} is the rms current during the data burst of an OFDMA signal.

$I_{DEFAULT}$ can be the quiescent current drawn when there is no data burst and the device remains biased, the sleep current (<1 µA) if the device is defaulted to sleep mode, or the standby current.

For example, in a 31% duty cycle 802.16e OFDMA signal, the burst current is calculated by rearranging the previous equation to get

$$I_{BURST} = \frac{(I_{AVG} - 0.69 \times I_{DEFAULT})}{0.31}$$

Finally, the PAE is calculated by

$$PAE\ (\%) = \frac{RF\ Output\ Power\ (\text{mW}) - RF\ Input\ Power\ (\text{mW})}{V_{CC}(\text{V}) \times I_{BURST}(\text{mA})} \times 100$$

When RF is 2.6 GHz, 31% 16 QAM OFDMA signal, V_{CC} is 3.3 V, RF Output Power is 25 dBm, and RF Input Power is −4 dBm, the ADL5571 consumes a burst current, I_{BURST} is 450 mA and PAE = 21%.

EVALUATION BOARD

The ADL5571 performance data was taken on a FR4 board layout. Care should be taken to ensure 50 Ω impedance for all RF traces. For optimal performance in linearity, gain, and efficiency, the output matching capacitor, C3, should be placed 35 mils from the edge of the package.

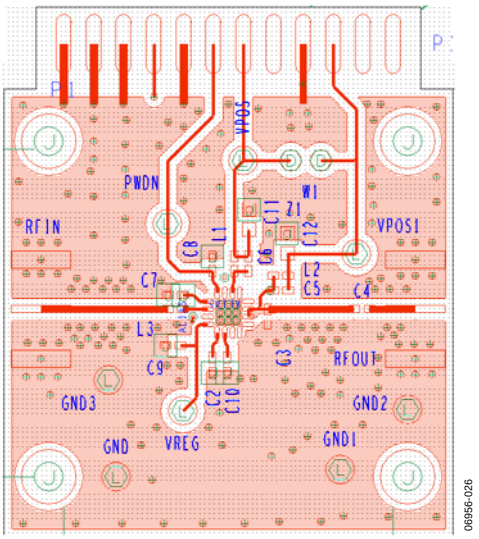

Figure 25. Evaluation Board Top Layer

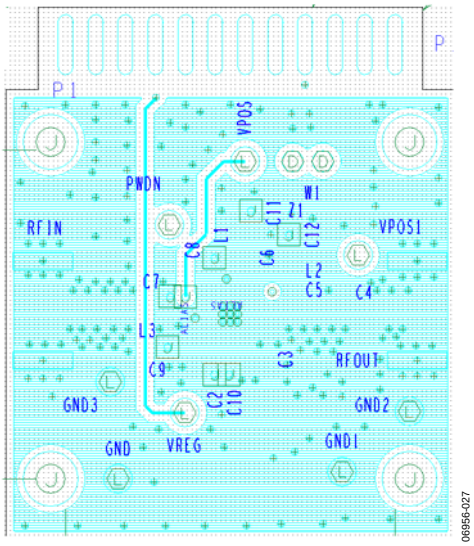

Figure 26. Evaluation Board Bottom Layer

Table 6. Evaluation Board Configuration Options

Component	Function	Default Value
VPOS, VPOS1, GND	Supply and Ground Connections.	W1 = installed
TP1 (STBY/PWDN)	Transmit/Standby Mode. When STBY is low (0 V), the device operates in transmit mode. When the radio is receiving data, STBY can be taken high (2.5 V), reducing the supply current to 9 mA.	Not applicable
TP2 (VREG)	Normal/Sleep Mode. When VREG is low, the device goes into sleep mode, reducing the supply current to 10 µA. When VREG is high (2.85 V), the device operates in its normal transmit mode and the VREG pin draws a bias current of approximately 9 mA.	Not applicable
L3	Input Interface. L3 matches the input to 50 Ω.	L3 = 2.7 nH (Size 0402)
C3, C4	Output Interface. C4 provides dc blocking. C3 matches the output to 50 Ω.	C3 = 2.7 pF (Size 0402) (C3 value for 2.5 GHz to 2.7 GHz operation, tight tolerance recommended) C4 = 39 pF (Size 0402)
C2, C10	Filter Interface. A ground-referenced capacitor should be connected to this node to reduce bias line noise.	C2 = 2.2 pF (Size 0402) C10 = 0.01 µF (Size 0402)
C7, C8, C9, C11, C12	Power Supply Decoupling. Capacitors C7 through C12 are used for power supply decoupling. They should be placed as close as possible to the DUT.	C7 = 0.01 µF (Size 0402) C8 = 0.01 µF (Size 0402) C9 = 0.01 µF (Size 0402) C11 = 1 µF (Size 0402) C12 = 1 µF (Size 0402)
L1, C6, L2, C5	RF Trap. L1, C6 and L2, C5 form tank circuits and prevent RF from propagating on the dc supply lines	L1 = 1 nH (Size 0402) C6 = 3.3 pF (Size 0402) L2 = 11 nH (Size 0402) C5 = Open
RFIN, RFOUT	RF Input and Output SMA Connections.	

MEASUREMENT SETUP

When using the ADL5571 evaluation board, the following set up must be used:

1. Connect the output of the WiMAX signal generator to the RF input through a cable.
2. Connect the RF output SMA of the ADL5571 to the Spectrum Analyzer (preferably through an attenuator).
3. Ensure that Jumper W1 is in place. Alternatively, use a jumper cable to connect VPOS to VPOS1.
4. Connect power supply to VPOS. Set voltage to the desired supply level (3.3 V, 5 V). Set the current limit on this source to 1 A.
5. Connect another power supply to VREG. Set voltage to 2.85 V. Set the current limit on this source to 100 mA.
6. Turn all voltage supplies on.
7. Turn RF source on.

Table 7. Operating Modes: Power Supply[1]

Nomenclature	High	Low
VREG	2.85 V	0 V
STBY	2.5 V	0 V

[1] Note that device is not sequence dependent.

OUTLINE DIMENSIONS

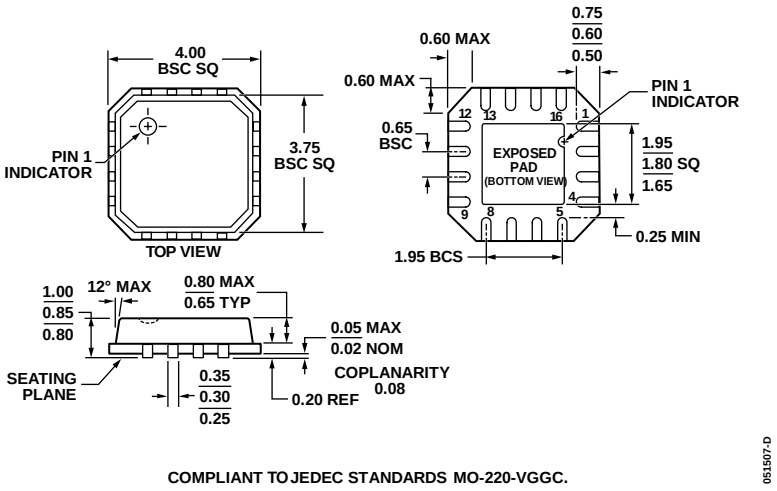

Figure 27. 16-Lead Lead Frame Chip Scale Package [LFCSP_VQ]
4 mm × 4 mm Body, Very Thin Quad
(CP-16-16)
Dimensions shown in millimeters

ORDERING GUIDE

Model	Temperature Range	Package Description	Package Option	Ordering Quantity
ADL5571ACPZ-R7[1]	−40°C to +85°C	16-Lead Lead Frame Chip Scale Package [LFCSP_VQ]	CP-16-16	1,500
ADL5571-EVALZ[1]		Evaluation Board		

[1] Z = RoHS Compliant Part.

NOTES

©2008 Analog Devices, Inc. All rights reserved. Trademarks and registered trademarks are the property of their respective owners.
D06956-0-1/08(0)