50 MHz to 6 GHz RF/IF Gain Block

ADL5541

FEATURES

- **Fixed gain of 15 dB**
- **Operation up to 6 GHz**
- **Input/output internally matched to 50 Ω**
- **Integrated bias control circuit**
- **Output IP3**
  - **44 dBm at 500 MHz**
  - **40 dBm at 900 MHz**
- **Output 1 dB compression: 19.7 dBm at 900 MHz**
- **Noise figure of 3.5 dB at 900 MHz**
- **Single 5 V power supply**
- **Small footprint 8-lead LFCSP**
- **Pin compatible with 20 dB gain ADL5542**
- **1 kV ESD (Class 1C)**

FUNCTIONAL BLOCK DIAGRAM

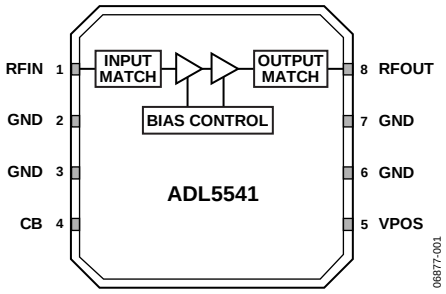

Figure 1.

GENERAL DESCRIPTION

The ADL5541 is a broadband 15 dB linear amplifier that operates at frequencies up to 6 GHz. The device can be used in a wide variety of CATV, cellular, and instrumentation equipment.

The ADL5541 provides a gain of 15 dB, which is stable over frequency, temperature, power supply, and from device to device. The device is internally matched to 50 Ω with an input return loss of 10 dB or better up to 6 GHz. Only input/output ac coupling capacitors, power supply decoupling capacitors, and an external inductor are required for operation.

The ADL5541 is fabricated on an InGaP HBT process and has an ESD rating of 1 kV (Class 1C). The device is packaged in a 3 mm × 3 mm LFCSP that uses an exposed paddle for excellent thermal impedance.

The ADL5541 consumes 90 mA on a single 5 V supply and is fully specified for operation from −40°C to +85°C.

A fully populated RoHS-compliant evaluation board is available.

The ADL5542 is a companion part that offers a gain of 20 dB in a pin-compatible package.

Rev. 0
Information furnished by Analog Devices is believed to be accurate and reliable. However, no responsibility is assumed by Analog Devices for its use, nor for any infringements of patents or other rights of third parties that may result from its use. Specifications subject to change without notice. No license is granted by implication or otherwise under any patent or patent rights of Analog Devices. Trademarks and registered trademarks are the property of their respective owners.

One Technology Way, P.O. Box 9106, Norwood, MA 02062-9106, U.S.A.
Tel: 781.329.4700 **www.analog.com**
Fax: 781.461.3113 **©2007 Analog Devices, Inc. All rights reserved.**

TABLE OF CONTENTS

Features 1
Functional Block Diagram 1
General Description 1
Revision History 2
Specifications 3
Typical Scattering Parameters 5
Absolute Maximum Ratings 6
ESD Caution 6
Pin Configuration and Function Descriptions 7
Typical Performance Characteristics 8
Basic Connections 10
Soldering Information and Recommended PCB Land Pattern 10
Evaluation Board 11
Outline Dimensions 12
Ordering Guide 12

REVISION HISTORY

7/07—Revision 0: Initial Version

SPECIFICATIONS

VPOS = 5 V and T_A = 25°C, unless otherwise noted.

Table 1.

Parameter	Conditions	Min	Typ	Max	Unit
OVERALL FUNCTION					
Frequency Range		50		6000	MHz
Gain (S21)	900 MHz		15.2		dB
Input Return Loss (S11)	Frequency 500 MHz to 5 GHz		−12		dB
Output Return Loss (S22)	Frequency 500 MHz to 5 GHz		−10		dB
Reverse Isolation (S12)			−19		dB
FREQUENCY = 100 MHz					
Gain			15.7		dB
Output 1 dB Compression Point			19		dBm
Output Third-Order Intercept	Δf = 1 MHz, output power (P_{OUT}) = 0 dBm per tone		38		dBm
Noise Figure			3.5		dB
FREQUENCY = 500 MHz					
Gain		14.7	15.1	15.5	dB
vs. Frequency	±50 MHz		±0.15		dB
vs. Temperature	−40°C ≤ T_A ≤ +85°C		±0.1		dB
vs. Supply	4.75 V to 5.25 V		±0.01		dB
Output 1 dB Compression Point			19.9		dBm
Output Third-Order Intercept	Δf = 1 MHz, output power (P_{OUT}) = 3 dBm per tone		44		dBm
Noise Figure			3.5	3.7	dB
FREQUENCY = 900 MHz					
Gain		14.9	15.2	15.4	dB
vs. Frequency	±50 MHz		±0.03		dB
vs. Temperature	−40°C ≤ T_A ≤ +85°C		±0.15		dB
vs. Supply	4.75 V to 5.25 V		±0.01		dB
Output 1 dB Compression Point			19.7		dBm
Output Third-Order Intercept	Δf = 1 MHz, output power (P_{OUT}) = 0 dBm per tone		40.8		dBm
Noise Figure			3.5	3.7	dB
FREQUENCY = 2000 MHz					
Gain		13.9	14.7	15.4	dB
vs. Frequency	±50 MHz		±0.03		dB
vs. Temperature	−40°C ≤ T_A ≤ +85°C		±0.17		dB
vs. Supply	4.75 V to 5.25 V		±0.01		dB
Output 1 dB Compression Point			16.3		dBm
Output Third-Order Intercept	Δf = 1 MHz, output power (P_{OUT}) = 0 dBm per tone		39.2		dBm
Noise Figure			3.8	4.0	dB
FREQUENCY = 2400 MHz					
Gain		13.9	14.5	15.1	dB
vs. Frequency	±50 MHz		±0.03		dB
vs. Temperature	−40°C ≤ T_A ≤ +85°C		±0.19		dB
vs. Supply	4.75 V to 5.25 V		±0.02		dB
Output 1 dB Compression Point			14.9		dBm
Output Third-Order Intercept	Δf = 1 MHz, output power (P_{OUT}) = 0 dBm per tone		38.6		dBm
Noise Figure			4.0	4.2	dB

Parameter	Conditions	Min	Typ	Max	Unit
FREQUENCY = 3500 MHz					
Gain		13.6	14.3	14.9	dB
vs. Frequency	±50 MHz		±0.03		dB
vs. Temperature	−40°C ≤ T_A ≤ +85°C		±0.19		dB
vs. Supply	4.75 V to 5.25 V		±0.02		dB
Output 1 dB Compression Point			12.1		dBm
Output Third-Order Intercept	Δf = 1 MHz, output power (P_{OUT}) = 0 dBm per tone		30.7		dBm
Noise Figure			4.2	4.5	dB
FREQUENCY = 5800 MHz					
Gain		9.1	11.2	13.5	dB
vs. Frequency	±50 MHz		±0.15		dB
vs. Temperature	−40°C ≤ T_A ≤ +85°C		±0.9		dB
vs. Supply	4.75 V to 5.25 V		±0.02		dB
Output 1 dB Compression Point			5.8		dBm
Output Third-Order Intercept	Δf = 1 MHz, output power (P_{OUT}) = 0 dBm per tone		21.9		dBm
Noise Figure			6.0	7.0	dB
POWER INTERFACE	Pin VPOS				
Supply Voltage (VPOS)		4.5	5	5.5	V
Supply Current			90	100	mA
vs. Temperature	−40°C ≤ T_A ≤ +85°C		±12		mA
Power Dissipation	VPOS = 5 V		0.5		W

TYPICAL SCATTERING PARAMETERS

VPOS = 5 V and T_A = 25°C, the effects of the test fixture have been de-embedded up to the pins of the device.

Table 2.

	S11		S21		S12		S22	
Freq. (MHz)	**Magnitude (dB)**	**Angle (°)**	**Magnitude (dB)**	**Angle (°)**	**Magnitude (dB)**	**Angle (°)**	**Magnitude (dB)**	**Angle (°)**
50	−18.11	−134.53	16.29	+166.36	−19.15	+3.84	−17.89	−134.08
100	−20.84	−161.29	15.93	+168.53	−18.82	+2.26	−22.24	−155.22
500	−27.69	+115.36	15.58	+154.53	−18.70	−13.59	−24.96	+176.64
900	−27.48	+101.79	15.52	+136.22	−18.70	−26.33	−22.38	+173.92
1000	−26.87	+91.91	15.56	+131.64	−18.64	−29.43	−23.15	+174.28
1500	−29.18	−107.74	15.50	+108.03	−18.64	−44.69	−19.35	+167.80
2000	−17.88	−153.68	15.51	+84.72	−18.43	−60.42	−14.13	+176.19
2500	−9.87	+169.30	15.57	+59.74	−18.32	−75.48	−9.89	+161.55
3000	−7.92	+142.75	15.49	+35.05	−17.93	−92.29	−8.69	+138.18
3500	−7.74	+117.57	15.21	+9.15	−18.14	−110.62	−11.02	+100.39
4000	−10.85	+116.84	14.82	−16.13	−18.11	−125.08	−15.70	+6.37
4500	−13.25	+136.93	15.23	−41.75	−17.54	−142.99	−7.83	−80.59
5000	−13.97	+143.02	14.56	−68.15	−17.64	−161.24	−6.87	−112.39
5500	−13.68	−121.08	13.89	−96.10	−17.47	+178.77	−11.66	−102.32
6000	−4.52	−138.62	12.07	−123.56	−18.61	+157.35	−7.66	−54.40

ABSOLUTE MAXIMUM RATINGS

Table 3.

Parameter	Rating
Supply Voltage, VPOS	6.5 V
Input Power (re: 50 Ω)	10 dBm
Internal Power Dissipation (Paddle Soldered)	650 mW
θ_{JC} (Junction to Paddle)	28.5°C/W
Maximum Junction Temperature	150°C
Operating Temperature Range	−40°C to +85°C
Storage Temperature Range	−65°C to +150°C

Stresses above those listed under Absolute Maximum Ratings may cause permanent damage to the device. This is a stress rating only; functional operation of the device at these or any other conditions above those indicated in the operational section of this specification is not implied. Exposure to absolute maximum rating conditions for extended periods may affect device reliability.

ESD CAUTION



ESD (electrostatic discharge) sensitive device. Charged devices and circuit boards can discharge without detection. Although this product features patented or proprietary protection circuitry, damage may occur on devices subjected to high energy ESD. Therefore, proper ESD precautions should be taken to avoid performance degradation or loss of functionality.

PIN CONFIGURATION AND FUNCTION DESCRIPTIONS

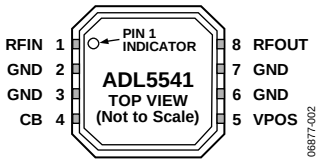

Figure 2. Pin Configuration

Table 4. Pin Function Descriptions

Pin No.	Mnemonic	Description
1	RFIN	RF Input. Requires a dc blocking capacitor.
2, 3, 6, 7	GND	Ground. Connect these pins to a low impedance ground plane.
4	CB	Low Frequency Bypass. A 1 µF capacitor should be connected between this pin and ground.
5	VPOS	Power Supply for Bias Controller. Connect directly to external power supply.
8	RFOUT	RF Output and Supply Voltage. DC bias is provided to this pin through an inductor that is tied to the external power supply. RF path requires a dc blocking capacitor.
Exposed Paddle		Exposed Paddle. Internally connected to GND. Solder to a low impedance ground plane.

TYPICAL PERFORMANCE CHARACTERISTICS

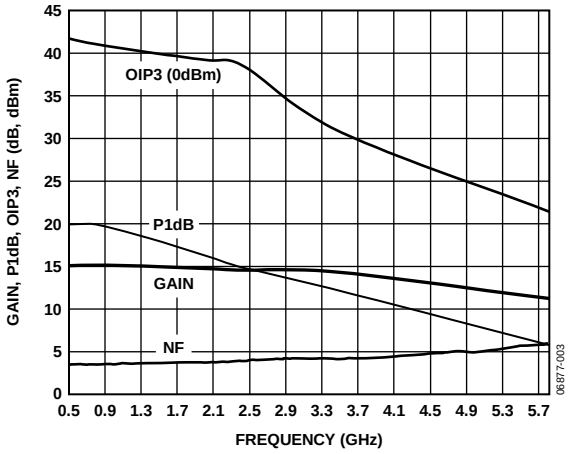

Figure 3. Gain, P1dB, OIP3, and Noise Figure vs. Frequency

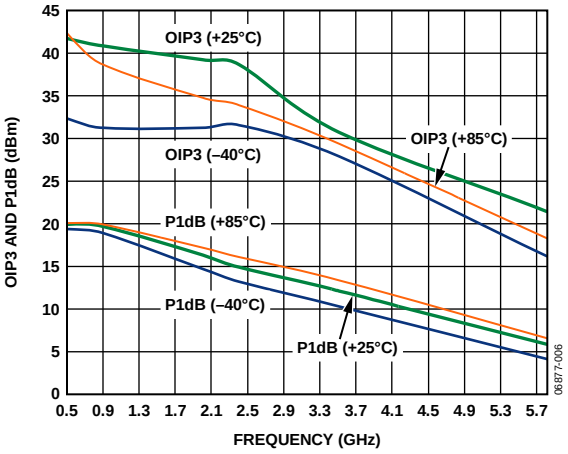

Figure 6. OIP3 and P1dB vs. Frequency and Temperature

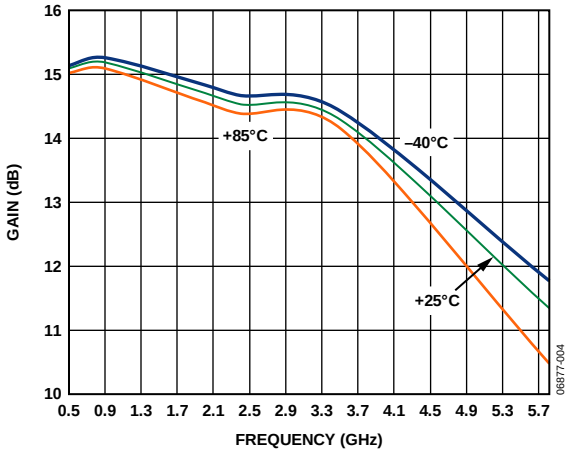

Figure 4. Gain vs. Frequency and Temperature

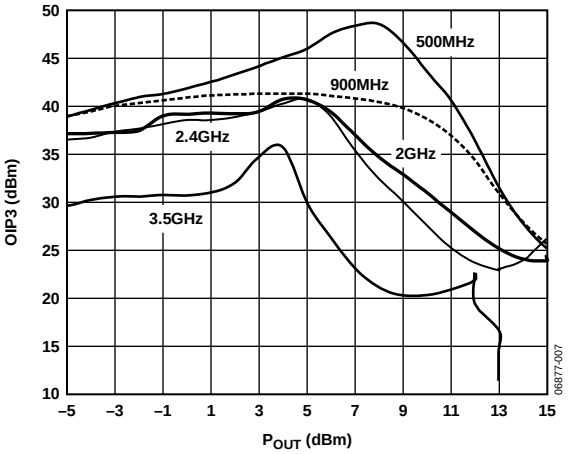

Figure 7. OIP3 vs. Output Power (P_{OUT}) and Frequency

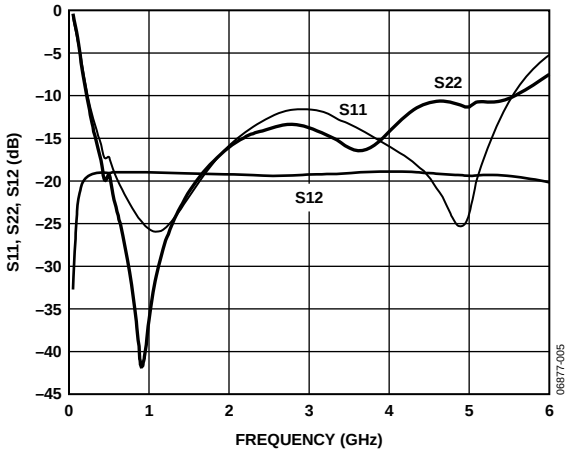

Figure 5. Input Return Loss (S11), Output Return Loss (S22), and Reverse Isolation (S12) vs. Frequency

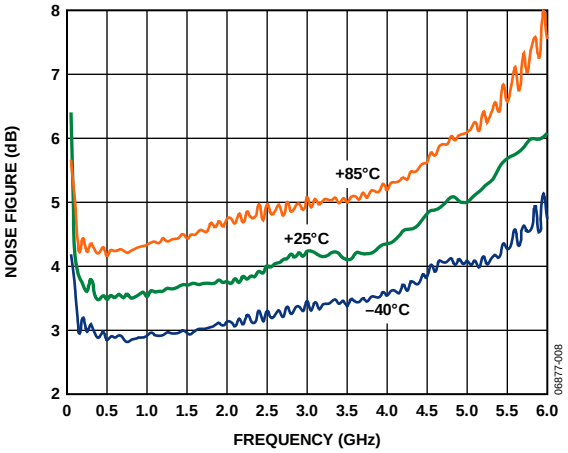

Figure 8. Noise Figure vs. Frequency and Temperature

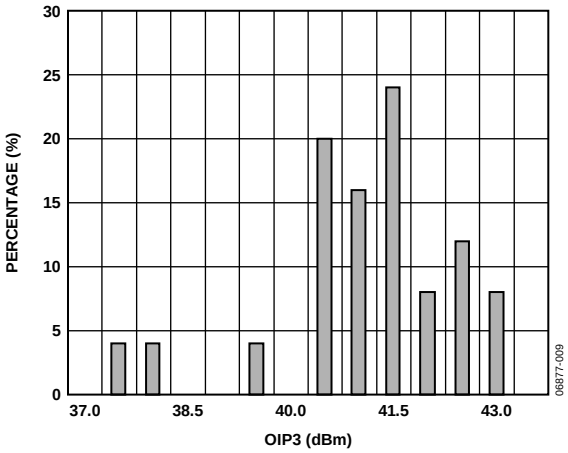

Figure 9. OIP3 Distribution at 900 MHz

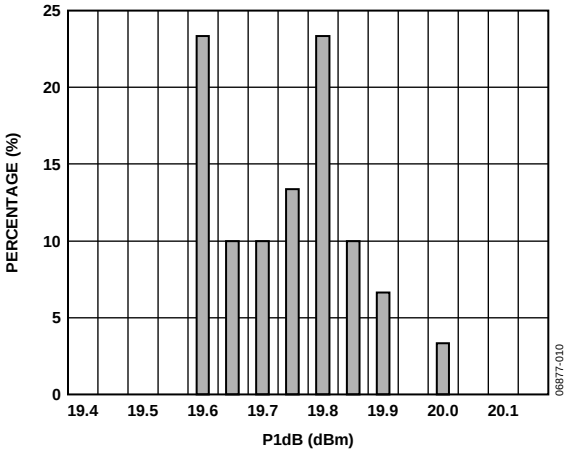

Figure 10. P1dB Distribution at 900 MHz

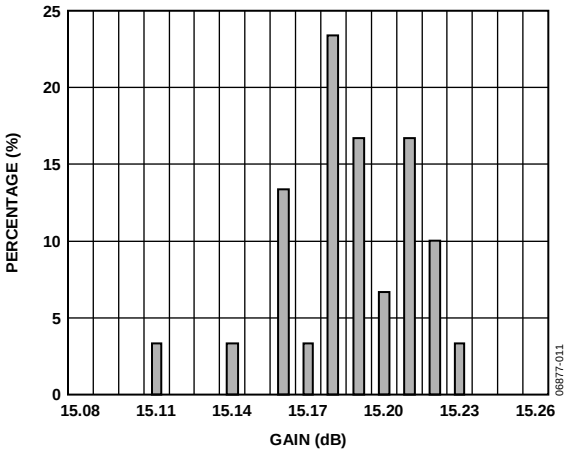

Figure 11. Gain Distribution at 900 MHz

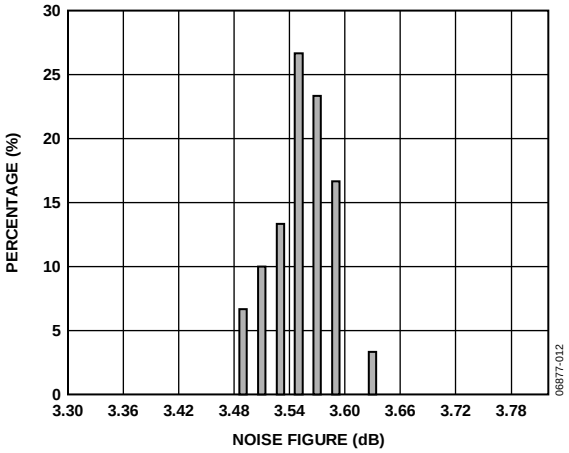

Figure 12. Noise Figure Distribution at 900 MHz

BASIC CONNECTIONS

The basic connections for operating the ADL5541 are shown in Figure 13. Recommended components are listed in Table 5. The input and output should be ac-coupled with appropriately sized capacitors (device characterization was performed with 33 pF capacitors). A 5 V dc bias is supplied to the amplifier via GND (Pin 6) and through a biasing inductor connected to RFOUT (Pin 8). The bias voltage should be decoupled using a 1 µF capacitor, a 1.2 nF capacitor, and two 68 pF capacitors.

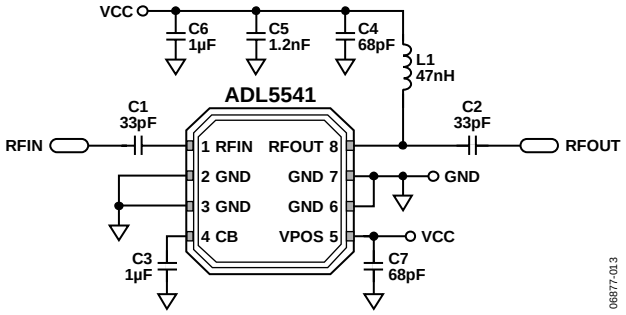

Figure 13. Basic Connections

For operation between 50 MHz and 500 MHz, a larger biasing choke and ac coupling capacitors are necessary (see Table 5). Figure 14 shows a plot of the input return loss, the output return loss and the gain with these components. At 100 MHz, the ADL5541 achieves an OIP3 of 38 dBm (P_{OUT} = 0 dBm per tone). The noise figure performance for operation from 50 MHz to 500 MHz is shown in Figure 15. When operating below 50 MHz, the ADL5541 exhibits gain peaking, and the input and output match degrade significantly.

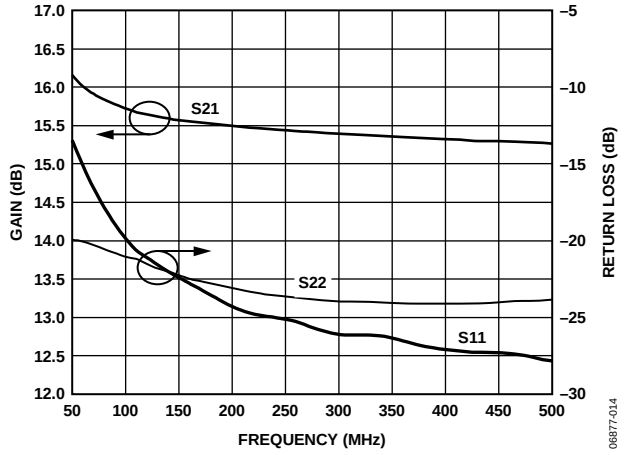

Figure 14. Input Return Loss (S11), Output Return Loss (S22), and Gain (S21) vs. Frequency

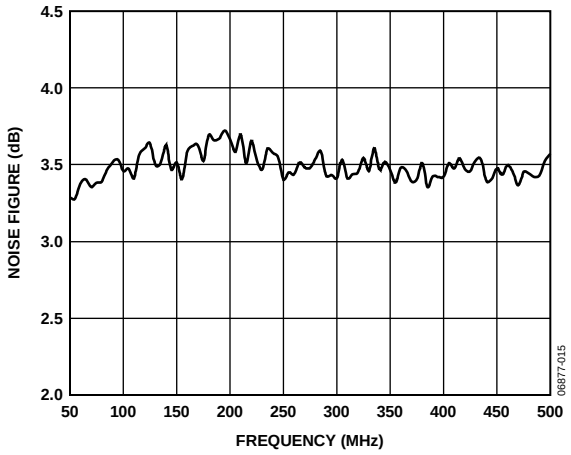

Figure 15. Noise Figure vs. Frequency from 50 MHz to 500 MHz

SOLDERING INFORMATION AND RECOMMENDED PCB LAND PATTERN

Figure 16 shows the recommended land pattern for the ADL5541. To minimize thermal impedance, the exposed paddle on the package underside should be soldered down to a ground plane along with Pin 2, Pin 3, Pin 6, and Pin 7. If multiple ground layers exist, they should be stitched together using vias (a minimum of five vias is recommended). For more information on land pattern design and layout, refer to Application Note AN-772, *A Design and Manufacturing Guide for the Lead Frame Chip Scale Package (LFCSP)*.

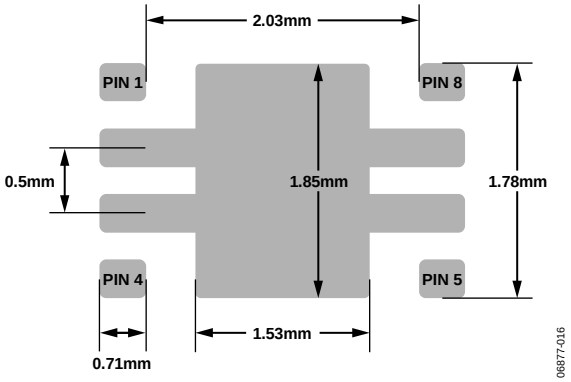

Figure 16. Recommended Land Pattern

Table 5. Recommended Components for Basic Connections

Frequency	C1	C2	C3	L1	C4	C5	C6	C7
50 MHz to 500 MHz	0.1 µF	0.1 µF	1 µF	470 nH (Coilcraft 0603LS-471-NX or equivalent)	68 pF	1.2 nF	1 µF	68 pF
500 MHz to 6000 MHz	33 pF	33 pF	1 µF	47 nH (Coilcraft 0603CS-47-NX or equivalent)	68 pF	1.2 nF	1 µF	68 pF

EVALUATION BOARD

Figure 19 shows the schematic for the ADL5541 evaluation board. The board is powered by a single 5 V supply.

The components used on the board are listed in Table 6. Power can be applied to the board through clip-on leads (VCC and GND) or through a 2-pin header (W1).

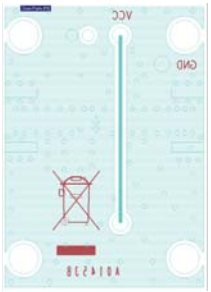

Figure 17. Evaluation Board Layout (Bottom)

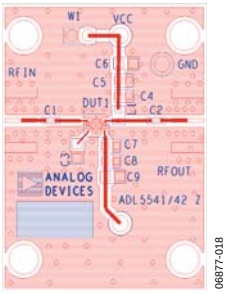

Figure 18. Evaluation Board Layout (Top)

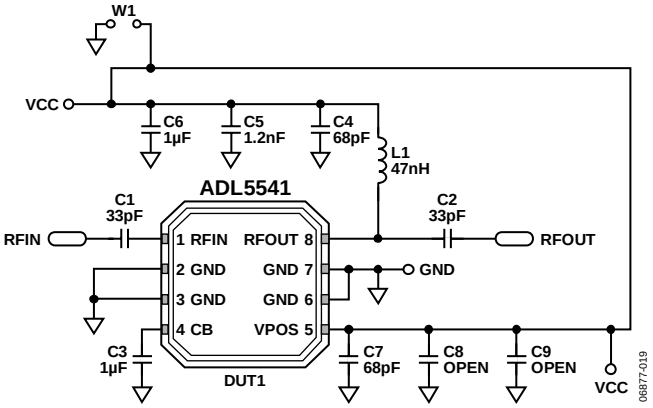

Figure 19. Evaluation Board Schematic

Table 6. Evaluation Board Configuration

Component	Function	Default Value
DUT1	Gain block	ADL5541
C1, C2	AC coupling capacitors	33 pF, 0402
C3	Low frequency bypass capacitor	1 µF, 0805
C4, C5, C6, C7, C8, C9	Power supply decoupling capacitors	C4 and C7 = 68 pF, 0603 C5 = 1.2 nF, 0603 C6 = 1 µF, 0805 C8 and C9 = open
L1	DC bias inductor	47 nH, 0603 (Coilcraft 0603CS-47-NX or equivalent)
VCC and GND	Clip-on terminals for power supply	
W1	2-pin header for connection of ground and supply via cable	

OUTLINE DIMENSIONS

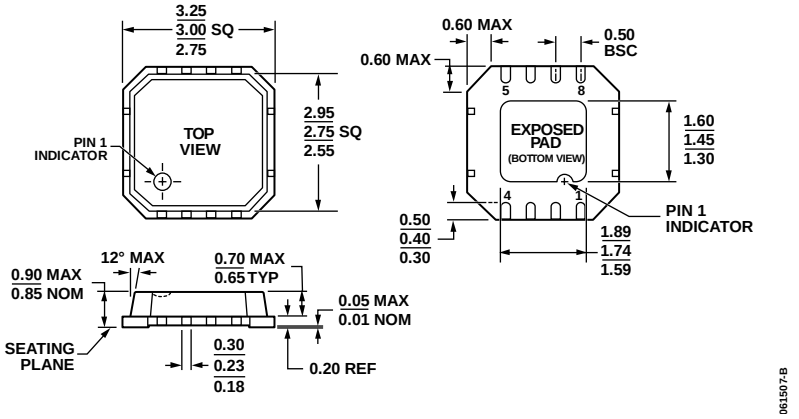

Figure 20. 8-Lead Lead Frame Chip Scale Package [LFCSP_VD]
3 mm × 3 mm Body, Very Thin, Dual Lead
(CP-8-2)
Dimensions shown in millimeters

ORDERING GUIDE

Model	Temperature Range	Package Description	Package Option	Branding
ADL5541ACPZ-R7[1]	−40°C to +85°C	8-Lead LFCSP_VD, Tape and Reel	CP-8-2	Q13
ADL5541-EVALZ[1]		Evaluation Board		

[1] Z = RoHS Compliant Part.

Visit www.analog.com/rfamps for the latest information on the Analog Devices, Inc., entire RF amplifier portfolio.

Visit www.analog.com/rf for the latest information on the Analog Devices entire RF portfolio.

©2007 Analog Devices, Inc. All rights reserved. Trademarks and registered trademarks are the property of their respective owners.
D06877-0-7/07(0)