2300 MHz to 3000 MHz Quadrature Modulator

ADL5373

FEATURES

Output frequency range: 2300 MHz to 3000 MHz
Modulation bandwidth: >500 MHz (3 dB)
Output third-order intercept: 26 dBm @ 2500 MHz
1 dB output compression: 13.8 dBm @ 2500 MHz
Noise floor: −157.1 dBm/Hz @ 2500 MHz
Sideband suppression: −57 dBc @ 2500 MHz
Carrier feedthrough: −32 dBm @ 2500 MHz
Single supply: 4.75 V to 5.25 V
24-lead LFCSP

APPLICATIONS

WiMAX/broadband wireless access systems
Satellite modems

FUNCTIONAL BLOCK DIAGRAM

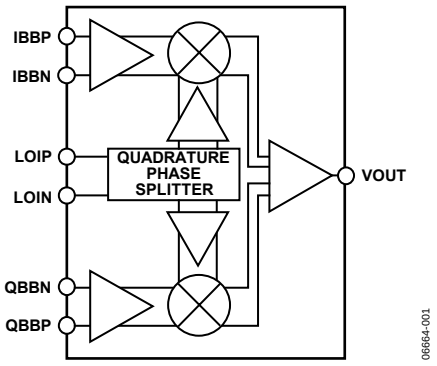

Figure 1.

GENERAL DESCRIPTION

The ADL5373 supports a frequency of operation from 2300 MHz to 3000 MHz and is a pin-compatible member of the fixed gain quadrature modulator (F-MOD) family designed for use from 300 MHz to 4000 MHz. The ADL5373 provides excellent phase accuracy and amplitude balance enabling high performance intermediate frequency or direct radio frequency modulation for communications systems.

The ADL5373 provides a >500 MHz, 3 dB baseband bandwidth, making it ideally suited for use in broadband zero IF or low IF-to-RF applications and in broadband digital predistortion transmitters.

The ADL5373 accepts two differential baseband inputs that are mixed with a local oscillator (LO) to generate a single-ended output.

The ADL5373 is fabricated using the Analog Devices, Inc. advanced silicon-germanium bipolar process. It is available in a 24-lead, exposed paddle, Pb-free LFCSP. Performance is specified over a −40°C to +85°C temperature range. A Pb-free evaluation board is available.

Rev. A
Information furnished by Analog Devices is believed to be accurate and reliable. However, no responsibility is assumed by Analog Devices for its use, nor for any infringements of patents or other rights of third parties that may result from its use. Specifications subject to change without notice. No license is granted by implication or otherwise under any patent or patent rights of Analog Devices. Trademarks and registered trademarks are the property of their respective owners.

One Technology Way, P.O. Box 9106, Norwood, MA 02062-9106, U.S.A.
Tel: 781.329.4700 **www.analog.com**
Fax: 781.461.3113 **©2007–2008 Analog Devices, Inc. All rights reserved.**

TABLE OF CONTENTS

Features ... 1
Applications ... 1
Functional Block Diagram ... 1
General Description ... 1
Revision History ... 2
Specifications ... 3
Absolute Maximum Ratings ... 5
ESD Caution ... 5
Pin Configuration and Function Descriptions ... 6
Typical Performance Characteristics ... 7
Theory of Operation ... 11
Circuit Description ... 11
Basic Connections ... 12
Power Supply and Grounding ... 12
Baseband Inputs ... 12
LO Input ... 12
RF Output ... 12
Optimization ... 13
Applications Information ... 14
DAC Modulator Interfacing ... 14
Limiting the AC Swing ... 14
Filtering ... 14
Using the AD9779 Auxiliary DAC for Carrier Feedthrough Nulling ... 15
WiMAX Operation ... 15
LO Generation Using PLLs ... 16
Transmit DAC Options ... 16
Modulator/Demodulator Options ... 16
Evaluation Board ... 17
Characterization Setup ... 18
Outline Dimensions ... 20
Ordering Guide ... 20

REVISION HISTORY

2/08—Rev. 0 to Rev. A

Changes to Features and General Description ... 1
Changes to Table 1 ... 3
Changes to Table 2 ... 5
Changes to Figure 3, Figure 4, and Figure 6 to Figure 8 ... 7
Changes to Figure 9 to Figure 14 ... 8
Changes to Figure 15 to Figure 20 ... 9
Changes to Figure 21 to Figure 23 ... 10
Changes to Optimization Section and Figure 27 ... 13
Changes to Figure 35 ... 15
Changes to WiMAX Operation Section and Figure 36 ... 16
Changes to Evaluation Board Section ... 17
Changes to Characterization Setup Section ... 18

6/07—Revision 0: Initial Version

SPECIFICATIONS

V_S = 5 V, T_A = 25°C, LO = 0 dBm[1], baseband I/Q amplitude = 1.4 V p-p differential sine waves in quadrature with a 500 mV dc bias, baseband I/Q frequency (f_{BB}) = 1 MHz, unless otherwise noted.

Table 1.

Parameter	Conditions	Min	Typ	Max	Unit
OPERATING FREQUENCY RANGE	Low frequency		2300		MHz
	High frequency		3000		MHz
LO = 2300 MHz					
Output Power	V_{IQ} = 1.4 V p-p differential		4.2		dBm
Output P1dB			11.0		dBm
Carrier Feedthrough			−35		dBm
Sideband Suppression			−57		dBc
Quadrature Error			<0.2		Degrees
I/Q Amplitude Balance			0.06		dB
Second Harmonic	$P_{OUT} - P(f_{LO} \pm (2 \times f_{BB}))$, P_{OUT} = 4.6 dBm		−58		dBc
Third Harmonic	$P_{OUT} - P(f_{LO} \pm (3 \times f_{BB}))$, P_{OUT} = 4.6 dBm		−49		dBc
Output IP2	$f1_{BB}$ = 3.5 MHz, $f2_{BB}$ = 4.5 MHz, P_{OUT} = −1.5 dBm per tone		56		dBm
Output IP3	$f1_{BB}$ = 3.5 MHz, $f2_{BB}$ = 4.5 MHz, P_{OUT} = −1.5 dBm per tone		25		dBm
WiMAX 802.16e	10 MHz carrier bandwidth (1024 subcarriers), 64 QAM signal, 30 MHz carrier offset, P_{OUT} = −10 dBm, P_{LO} = 0 dBm		−158.6		dBm/Hz
LO = 2500 MHz					
Output Power	V_{IQ} = 1.4 V p-p differential		7.1		dBm
Output P1dB			13.8		dBm
Carrier Feedthrough			−32		dBm
Sideband Suppression			−57		dBc
Quadrature Error			0.3		Degrees
I/Q Amplitude Balance			0.06		dB
Second Harmonic	$P_{OUT} - P(f_{LO} \pm (2 \times f_{BB}))$, P_{OUT} = 7.1 dBm		−57		dBc
Third Harmonic	$P_{OUT} - P(f_{LO} \pm (3 \times f_{BB}))$, P_{OUT} = 7.1 dBm		−47		dBc
Output IP2	$f1_{BB}$ = 3.5 MHz, $f2_{BB}$ = 4.5 MHz, P_{OUT} = 1.1 dBm per tone		58		dBm
Output IP3	$f1_{BB}$ = 3.5 MHz, $f2_{BB}$ = 4.5 MHz, P_{OUT} = 1.1 dBm per tone		26		dBm
Noise Floor	I/Q inputs = 0 V differential with a 500 mV common-mode bias, 20 MHz carrier offset		−157.1		dBm/Hz
WiMAX 802.16e	10 MHz carrier bandwidth (1024 subcarriers), 64 QAM signal, 30 MHz carrier offset, P_{OUT} = −10 dBm, P_{LO} = 0 dBm		−157.4		dBm/Hz
LO = 2700 MHz					
Output Power	V_{IQ} = 1.4 V p-p differential		7.7		dBm
Output P1dB			13.8		dBm
Carrier Feedthrough			−33		dBm
Sideband Suppression			−54		dBc
Quadrature Error			<0.2		Degrees
I/Q Amplitude Balance			0.07		dB
Second Harmonic	$P_{OUT} - P(f_{LO} \pm (2 \times f_{BB}))$, P_{OUT} = 7.7 dBm		−55		dBc
Third Harmonic	$P_{OUT} - P(f_{LO} \pm (3 \times f_{BB}))$, P_{OUT} = 7.7 dBm		−47		dBc
Output IP2	$f1_{BB}$ = 3.5 MHz, $f2_{BB}$ = 4.5 MHz, P_{OUT} = 1.6 dBm per tone		57		dBm
Output IP3	$f1_{BB}$ = 3.5 MHz, $f2_{BB}$ = 4.5 MHz, P_{OUT} = 1.6 dBm per tone		25		dBm
WiMAX 802.16e	10 MHz carrier bandwidth (1024 subcarriers), 64 QAM signal, 30 MHz carrier offset, P_{OUT} = −10 dBm, P_{LO} = 0 dBm		−155.3		dBm/Hz
LO INPUTS					
LO Drive Level[1]	Characterization performed at typical level	−6	0	+6	dBm
Input Return Loss	See Figure 9 for a plot of return loss vs. frequency		−6		dB

Parameter	Conditions	Min	Typ	Max	Unit
BASEBAND INPUTS	Pin IBBP, Pin IBBN, Pin QBBP, Pin QBBN				
I and Q Input Bias Level			500		mV
Input Bias Current	Current sourcing from each baseband input with a bias of 500 mV dc[2]		45		µA
Input Offset Current			0.1		µA
Differential Input Impedance	f_{BB} = 1 MHz		40||1.5		kΩ||pF
Bandwidth	LO = 2500 MHz, baseband input = 700 mV p-p sine wave on 500 mV dc				
0.1 dB			70		MHz
1 dB			350		MHz
POWER SUPPLIES	Pin VPS1 and Pin VPS2				
Voltage		4.75		5.25	V
Supply Current			174		mA

[1] Driven through Johanson Technology balun (Model 2450BL15B050)
[2] See V-to-I Converter section for architecture information.

ABSOLUTE MAXIMUM RATINGS

Table 2.

Parameter	Rating
Supply Voltage VPSx	5.5 V
IBBP, IBBN, QBBP, and QBBN	0 V to 2 V
LOIP and LOIN	13 dBm
Internal Power Dissipation	1119 mW
θ_{JA} (Exposed Paddle Soldered Down)	54°C/W
Maximum Junction Temperature	150°C
Operating Temperature Range	−40°C to +85°C
Storage Temperature Range	−65°C to +150°C

Stresses above those listed under Absolute Maximum Ratings may cause permanent damage to the device. This is a stress rating only; functional operation of the device at these or any other conditions above those indicated in the operational section of this specification is not implied. Exposure to absolute maximum rating conditions for extended periods may affect device reliability.

ESD CAUTION



ESD (electrostatic discharge) sensitive device. Charged devices and circuit boards can discharge without detection. Although this product features patented or proprietary protection circuitry, damage may occur on devices subjected to high energy ESD. Therefore, proper ESD precautions should be taken to avoid performance degradation or loss of functionality.

PIN CONFIGURATION AND FUNCTION DESCRIPTIONS

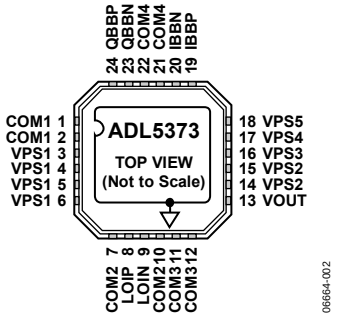

Figure 2. Pin Configuration

Table 3. Pin Function Descriptions

Pin No.	Mnemonic	Description
1, 2, 7, 10 to 12, 21, 22	COM1 to COM4	Input Common Pins. Connect to ground plane via a low impedance path.
3 to 6, 14 to 18	VPS1 to VPS5	Positive Supply Voltage Pins. All pins should be connected to the same supply (V_S). To ensure adequate external bypassing, connect 0.1 µF capacitors between each pin and ground. Adjacent power supply pins of the same name can share one capacitor (see Figure 25).
8, 9	LOIP, LOIN	50 Ω Differential Local Oscillator Input. Internally dc-biased. Pins must be ac-coupled. See Figure 8 for LO input impedance.
13	VOUT	Device Output. Single-ended RF output. Pin should be ac-coupled to the load. The output is ground referenced.
19, 20, 23, 24	IBBP, IBBN, QBBN, QBBP	Differential In-Phase and Quadrature Baseband Inputs. These high impedance inputs must be dc-biased to 500 mV dc and must be driven from a low impedance source. Nominal characterized ac signal swing is 700 mV p-p on each pin. This results in a differential drive of 1.4 V p-p with a 500 mV dc bias. These inputs are not self-biased and must be externally biased.
	Exposed Paddle	Connect to the ground plane via a low impedance path.

TYPICAL PERFORMANCE CHARACTERISTICS

V_S = 5 V, T_A = 25°C, LO = 0 dBm, baseband I/Q amplitude = 1.4 V p-p differential sine waves in quadrature with a 500 mV dc bias, baseband I/Q frequency (f_{BB}) = 1 MHz, unless otherwise noted.

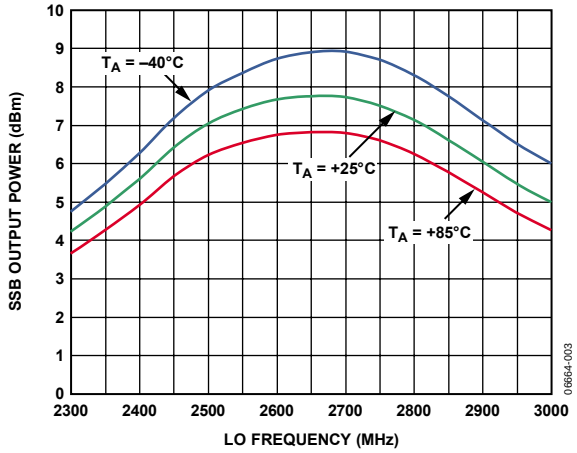

Figure 3. Single Sideband (SSB) Output Power (P_{OUT}) vs. LO Frequency (f_{LO}) and Temperature

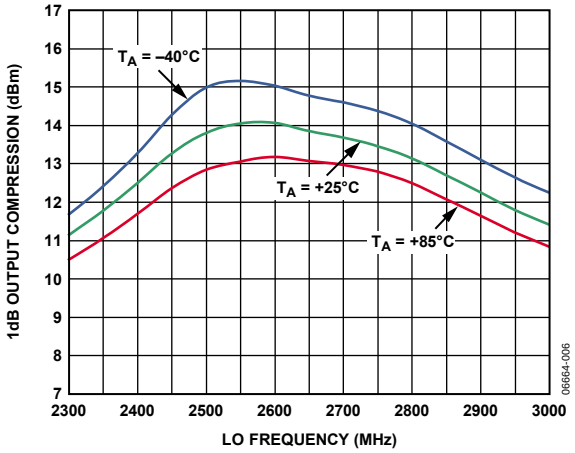

Figure 6. SSB Output P1dB Compression Point (OP1dB) vs. f_{LO} and Temperature

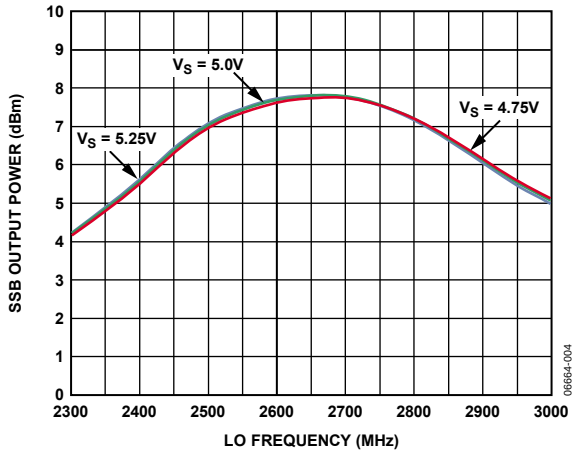

Figure 4. Single Sideband (SSB) Output Power (P_{OUT}) vs. f_{LO} and Supply

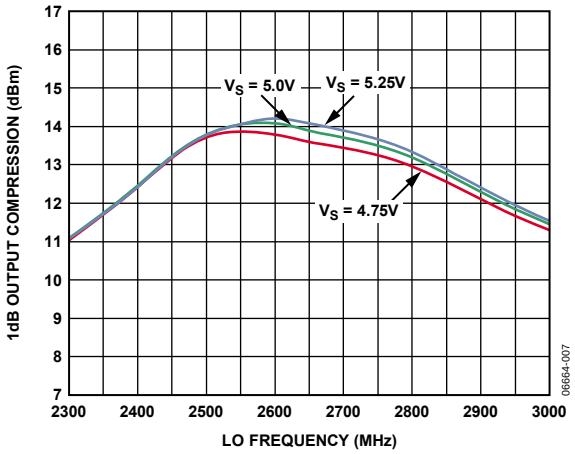

Figure 7. SSB Output P1dB Compression Point (OP1dB) vs. f_{LO} and Supply

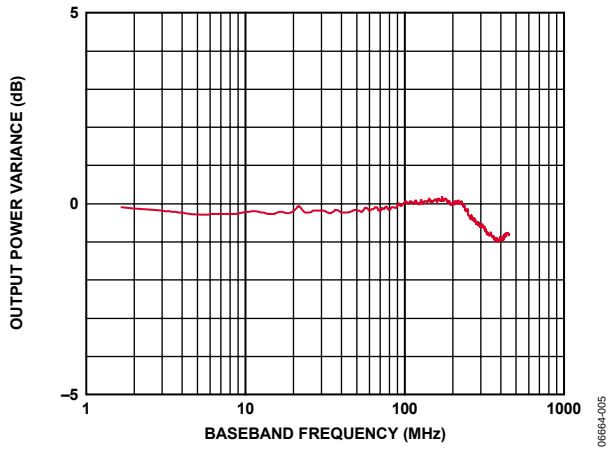

Figure 5. I and Q Input Bandwidth Normalized to Gain @ 1 MHz (f_{LO} = 2500 MHz)

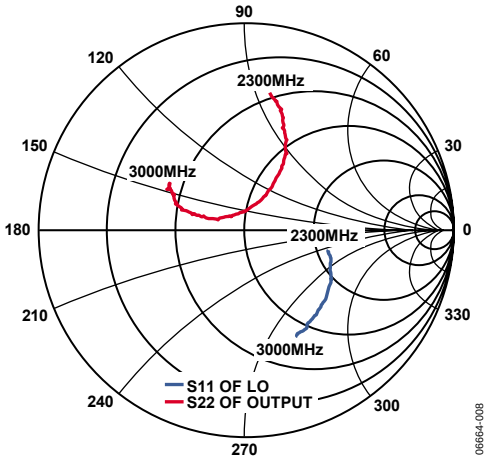

Figure 8. Smith Chart of LOIP (LOIN AC-Coupled to Ground) S11 and VOUT S22 (f_{LO} from 2300 MHz to 3000 MHz)

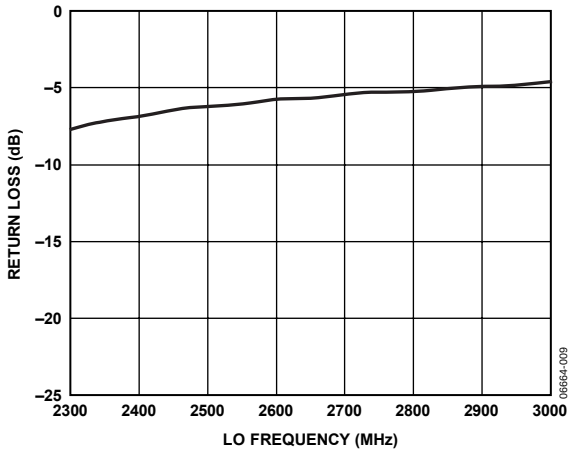

Figure 9. Return Loss (S11) of LOIP with LOIN AC-Coupled to Ground vs. f_{LO}

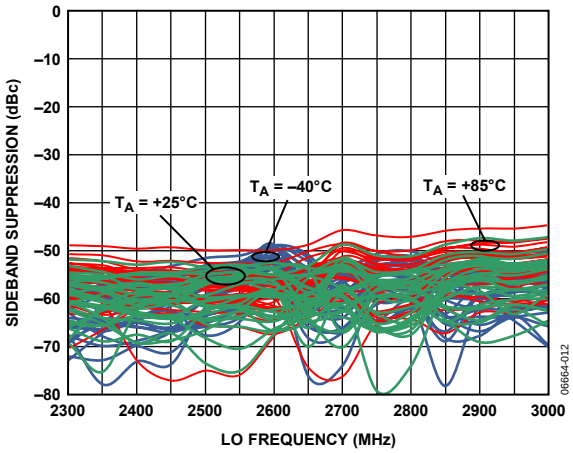

Figure 12. Sideband Suppression vs. f_{LO} and Temperature; Multiple Devices Shown

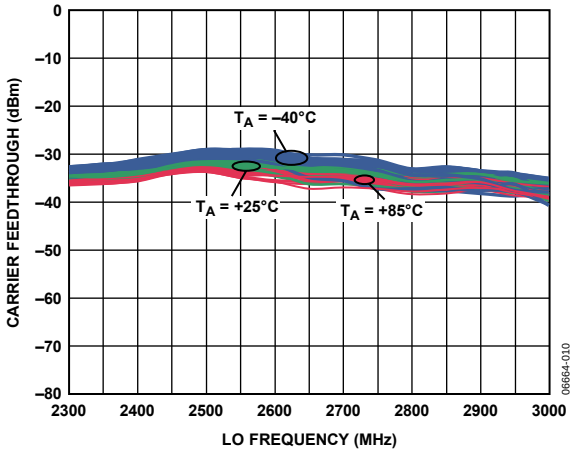

Figure 10. Carrier Feedthrough vs. f_{LO} and Temperature; Multiple Devices Shown

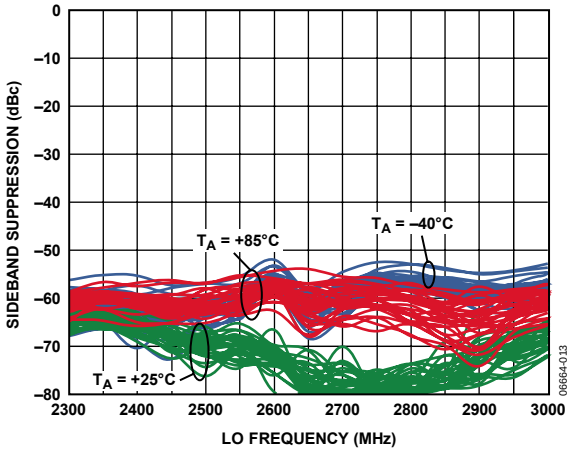

Figure 13. Sideband Suppression vs. f_{LO} and Temperature after Nulling at 25°C; Multiple Devices Shown

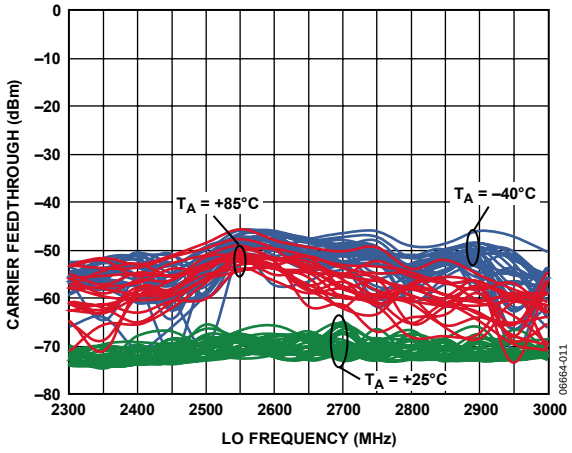

Figure 11. Carrier Feedthrough vs. f_{LO} and Temperature after Nulling at 25°C; Multiple Devices Shown

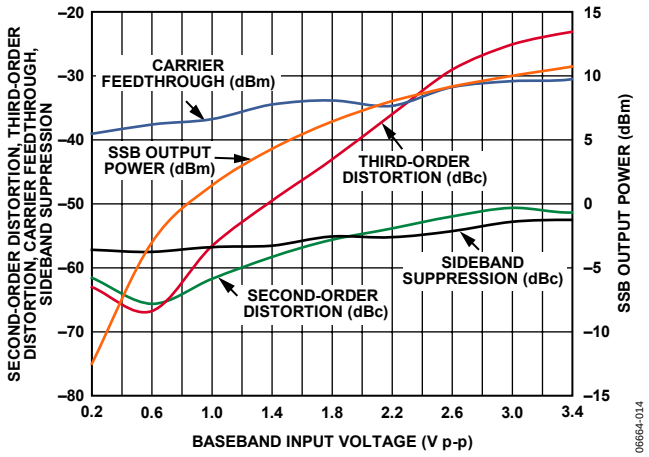

Figure 14. Second- and Third-Order Distortion, Carrier Feedthrough, Sideband Suppression, and SSB P_{OUT} vs. Baseband Differential Input Level (f_{LO} = 2300 MHz)

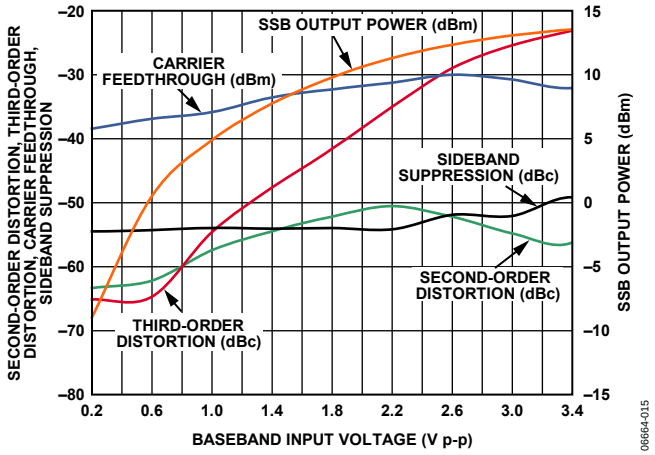

Figure 15. Second- and Third-Order Distortion, Carrier Feedthrough, Sideband Suppression, and SSB P_{OUT} vs. Baseband Differential Input Level (f_{LO} = 2700 MHz)

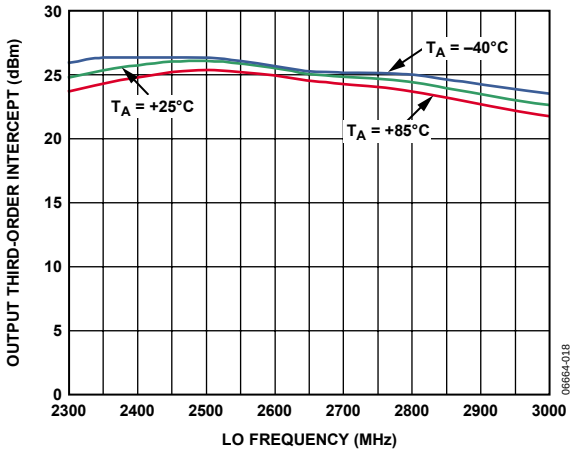

Figure 18. OIP3 vs. f_{LO} and Temperature

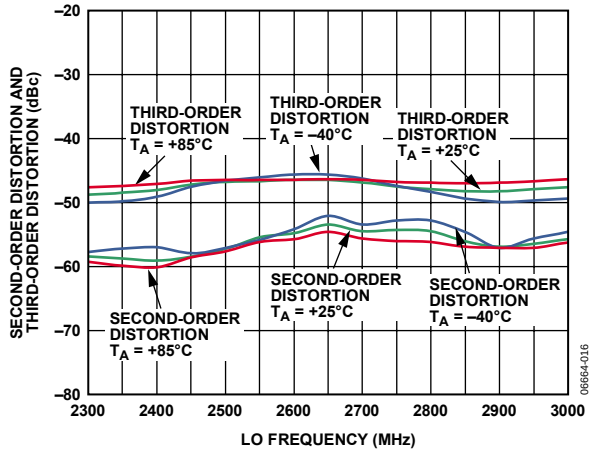

Figure 16. Second- and Third-Order Distortion vs. f_{LO} and Temperature (Baseband I/Q Amplitude = 1.4 V p-p Differential)

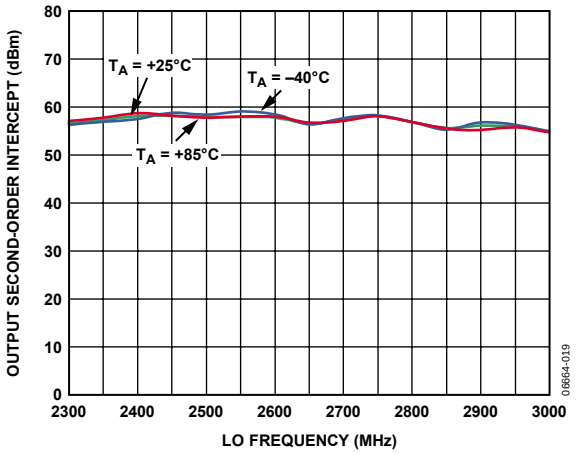

Figure 19. OIP2 vs. f_{LO} and Temperature

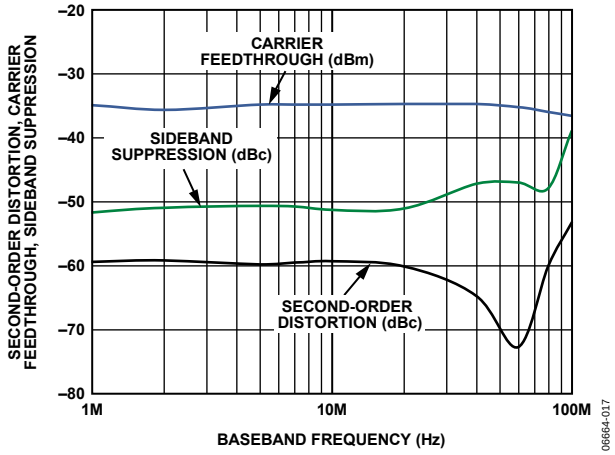

Figure 17. Second-Order Distortion, Carrier Feedthrough, and Sideband Suppression vs. f_{BB} (f_{LO} = 2500 MHz)

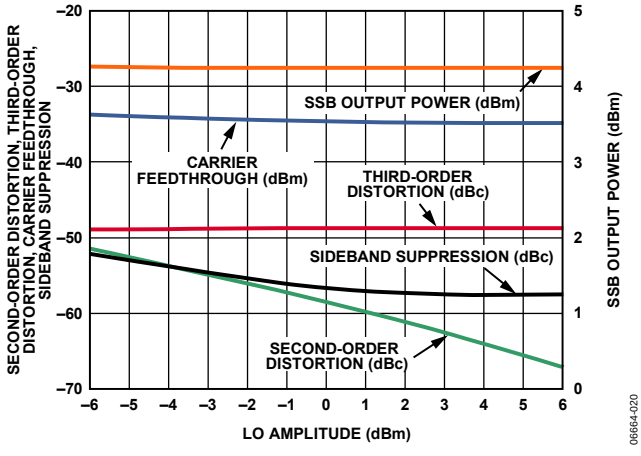

Figure 20. Second- and Third-Order Distortion, Carrier Feedthrough, Sideband Suppression, and SSB P_{OUT} vs. LO Amplitude (f_{LO} = 2300 MHz)

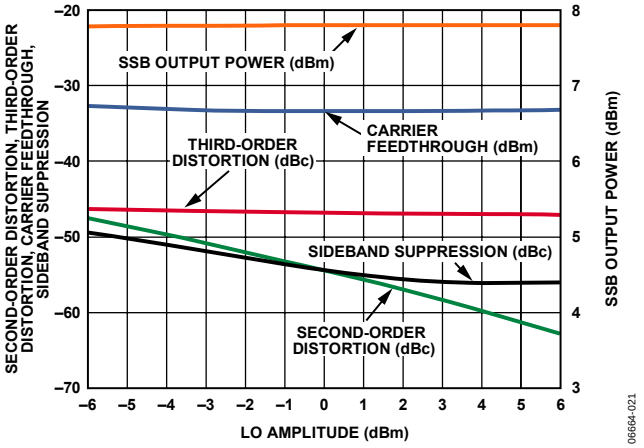

Figure 21. Second- and Third-Order Distortion, Carrier Feedthrough, Sideband Suppression, and SSB P_{OUT} vs. LO Amplitude (f_{LO} = 2700 MHz)

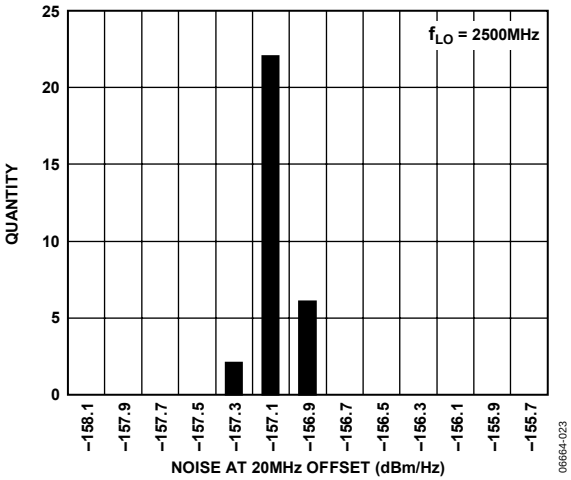

Figure 23. 20 MHz Offset Noise Floor Distribution at f_{LO} = 2500 MHz (I/Q Amplitude = 0 mV p-p with 500 mV dc Bias)

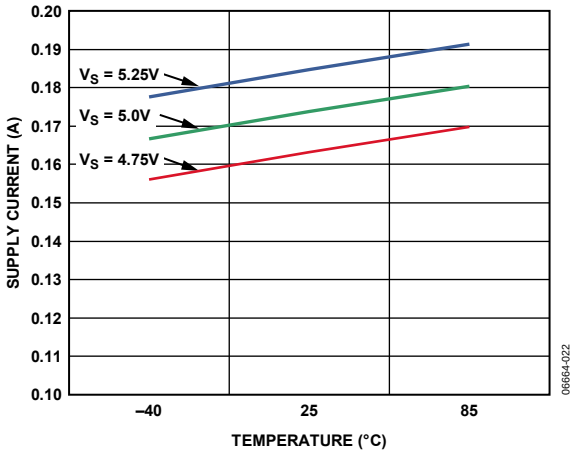

Figure 22. Power Supply Current vs. Temperature

THEORY OF OPERATION

CIRCUIT DESCRIPTION

Overview

The ADL5373 can be divided into five circuit blocks: the LO interface, the baseband voltage-to-current (V-to-I) converter, the mixers, the differential-to-single-ended (D-to-S) stage, and the bias circuit. A detailed block diagram of the device is shown in Figure 24.

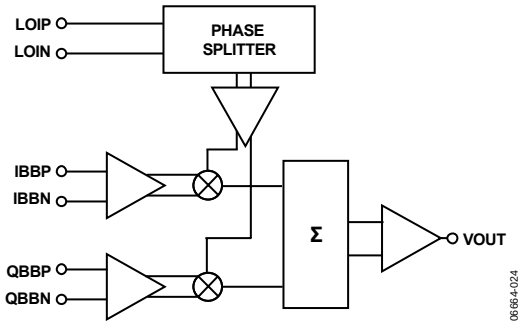

Figure 24. Block Diagram

The LO interface generates two LO signals in quadrature. These signals are used to drive the mixers. The I and Q baseband input signals are converted to currents by the V-to-I stages, which then drive the two mixers. The outputs of these mixers combine to feed the output balun, which provides a single-ended output. The bias cell generates reference currents for the V-to-I stage.

LO Interface

The LO interface consists of a polyphase quadrature splitter followed by a limiting amplifier. The LO input impedance is set by the polyphase. For optimal performance, the LO should be driven differentially. Each quadrature LO signal then passes through a limiting amplifier that provides the mixer with a limited drive signal.

V-to-I Converter

The differential baseband inputs (QBBP, QBBN, IBBN, and IBBP) consist of the bases of the PNP transistors, which present a high impedance. The voltages applied to these pins drive the V-to-I stage that converts baseband voltages into currents. The differential output currents of the V-to-I stages feed each of their respective Gilbert cell mixers. The dc common-mode voltage at the baseband inputs sets the currents in the two mixer cores. Varying the baseband common-mode voltage influences the current in the mixer and affects overall modulator performance. The recommended dc voltage for the baseband common-mode voltage is 500 mV dc.

Mixers

The ADL5373 has two double balanced mixers: one for the in-phase channel (I-channel) and one for the quadrature channel (Q-channel). Both mixers are based on the Gilbert cell design of four cross-connected transistors. The output currents from the two mixers sum together into a load. The signal developed across this load is used to drive the D-to-S stage.

D-to-S Stage

The output D-to-S stage consists of an on-chip balun that converts the differential signal to a single-ended signal. The balun presents high impedance to the output (VOUT); therefore, a matching network may be needed at the output for optimal power transfer.

Bias Circuit

An on-chip band gap reference circuit is used to generate a proportional-to-absolute temperature (PTAT) reference current for the V-to-I stage.

BASIC CONNECTIONS

Figure 25 shows the basic connections for the ADL5373.

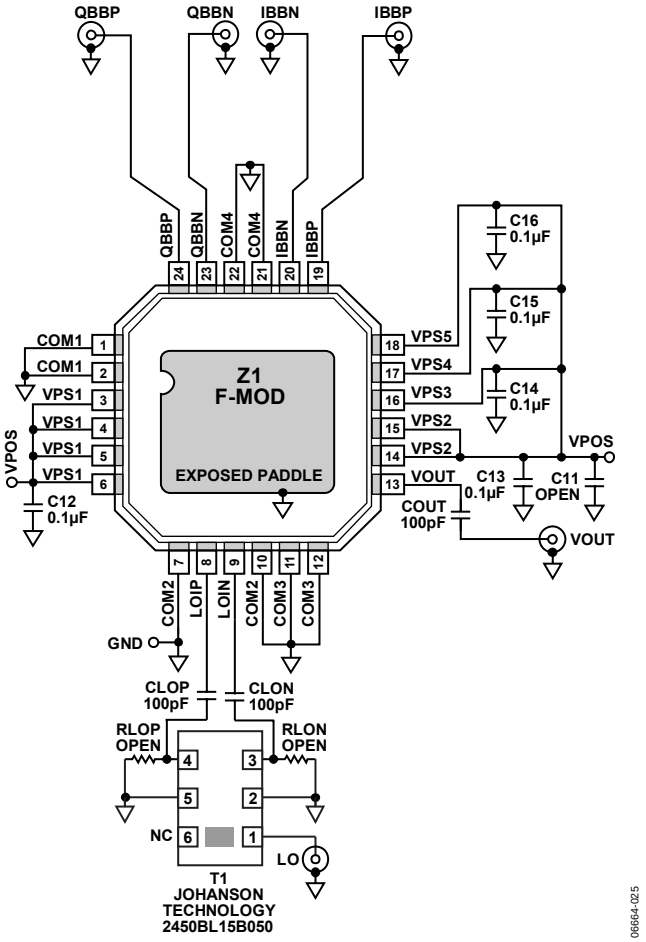

Figure 25. Basic Connections for the ADL5373

POWER SUPPLY AND GROUNDING

All the VPS pins must be connected to the same 5 V source. Adjacent pins of the same name can be tied together and decoupled with a 0.1 µF capacitor. Locate these capacitors as close as possible to the device. The power supply can range between 4.75 V and 5.25 V.

The COM1, COM2, COM3, and COM4 pins should be tied to the same ground plane through low impedance paths. Solder the exposed paddle on the underside of the package to a low thermal and electrical impedance ground plane. If the ground plane spans multiple layers on the circuit board, they should be stitched together with nine vias under the exposed paddle. Application Note AN-772 describes the thermal and electrical grounding of the LFCSP in detail.

BASEBAND INPUTS

The baseband inputs QBBP, QBBN, IBBP, and IBBN must be driven from a differential source. Bias the nominal drive level of 1.4 V p-p differential (700 mV p-p on each pin) to a common-mode level of 500 mV dc.

The dc common-mode bias level for the baseband inputs can range from 400 mV to 600 mV. This results in a reduction in the usable input ac swing range. The nominal dc bias of 500 mV allows for the largest ac swing, limited on the bottom end by the ADL5373 input range and on the top end by the output compliance range on most DACs from Analog Devices.

LO INPUT

The LO input should be driven differentially. The recommended balun for the ADL5373 is the Johanson Technology model 2450BL15B050. The LO pins should be ac-coupled to the balun.

The nominal LO drive of 0 dBm can be increased to up to 6 dBm to realize an improvement in the noise performance of the modulator. If the LO source cannot provide the 0 dBm level, operation at a reduced power below 0 dBm is acceptable. Reduced LO drive results in slightly increased modulator noise. The effect of LO power on sideband suppression and carrier feedthrough is shown in Figure 20 and Figure 21.

RF OUTPUT

The RF output is available at the VOUT pin (Pin 13). The VOUT pin connects to an internal balun, which is capable of driving a 50 Ω load. For applications requiring 50 Ω output impedance, external matching is needed (see Figure 8 for S22 performance). The internal balun provides a low dc path to ground. In most situations, the VOUT pin should be ac-coupled to the load.

OPTIMIZATION

The carrier feedthrough and sideband suppression performance of the ADL5373 can be improved by using optimization techniques.

Carrier Feedthrough Nulling

Carrier feedthrough results from minute dc offsets that occur between each of the differential baseband inputs. In an ideal modulator, the quantities ($V_{IOPP} - V_{IOPN}$) and ($V_{QOPP} - V_{QOPN}$) are equal to zero, which results in no carrier feedthrough. In a real modulator, those two quantities are nonzero and, when mixed with the LO, they result in a finite amount of carrier feedthrough. The ADL5373 is designed to provide a minimal amount of carrier feedthrough. Should even lower carrier feedthrough levels be required, minor adjustments can be made to the ($V_{IOPP} - V_{IOPN}$) and ($V_{QOPP} - V_{QOPN}$) offsets. The I-channel offset is held constant while the Q-channel offset is varied until a minimum carrier feedthrough level is obtained. The Q-channel offset required to achieve this minimum is held constant, while the offset on the I-channel is adjusted until a new minimum is reached. Through two iterations of this process, the carrier feedthrough can be reduced to as low as the output noise. The ability to null is sometimes limited by the resolution of the offset adjustment. Figure 26 shows the relationship of carrier feedthrough vs. dc offset as null.

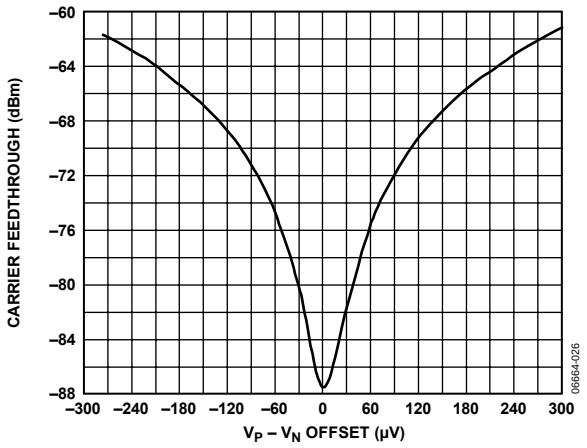

Figure 26. Carrier Feedthrough vs. DC Offset Voltage at 2500 MHz

Note that throughout the nulling process, the dc bias for the baseband inputs remains at 500 mV. When no offset is applied,

$V_{IOPP} = V_{IOPN}$ = 500 mV, or
$V_{IOPP} - V_{IOPN} = V_{IOS}$ = 0 V

When an offset of $+V_{IOS}$ is applied to the I-channel inputs,

V_{IOPP} = 500 mV + V_{IOS}/2, and
V_{IOPN} = 500 mV − V_{IOS}/2, such that
$V_{IOPP} - V_{IOPN} = V_{IOS}$

The same applies to the Q channel.

It is often desirable to perform a one-time carrier null calibration. This is usually performed at a single frequency. Figure 27 shows how carrier feedthrough varies with LO frequency over a range of ±100 MHz on either side of a null at 2600 MHz.

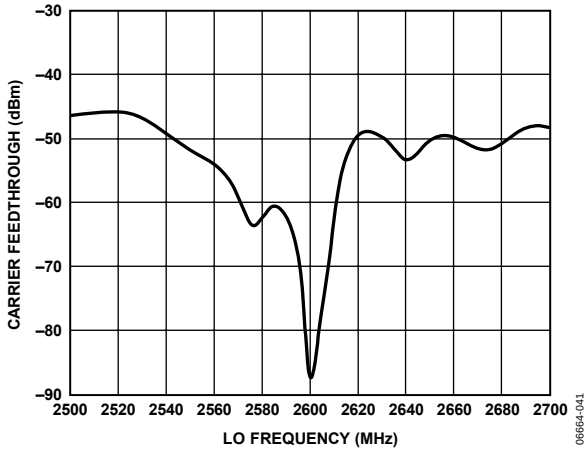

Figure 27. Carrier Feedthrough vs. Frequency After Nulling at 2600 MHz

Sideband Suppression Optimization

Sideband suppression results from relative gain and relative phase offsets between the I channel and Q channel and can be suppressed through adjustments to those two parameters. Figure 28 illustrates how sideband suppression is affected by the gain and phase imbalances.

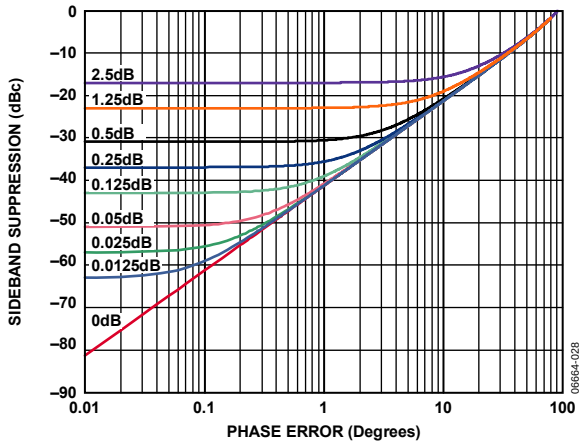

Figure 28. Sideband Suppression vs. Quadrature Phase Error for Various Quadrature Amplitude Offsets

Figure 28 underlines the fact that adjusting only one parameter improves the sideband suppression only to a point, unless the other parameter is also adjusted. For example, if the amplitude offset is 0.25 dB, improving the phase imbalance better than 1° does not yield any improvement in the sideband suppression. For optimum sideband suppression, an iterative adjustment between phase and amplitude is required.

The sideband suppression nulling can be performed either through adjusting the gain for each channel or through the modification of the phase and gain of the digital data coming from the digital signal processor.

APPLICATIONS INFORMATION

DAC MODULATOR INTERFACING

The ADL5373 is designed to interface with minimal components to members of the Analog Devices family of DACs. These DACs feature an output current swing from 0 mA to 20 mA, and the interface described in this section can be used with any DAC that has a similar output.

Driving the ADL5373 with a TxDAC®

An example of the interface using the AD9779 TxDAC is shown in Figure 29. The baseband inputs of the ADL5373 require a dc bias of 500 mV. The average output current on each of the outputs of the AD9779 is 10 mA. Therefore, a single 50 Ω resistor to ground from each of the DAC outputs results in an average current of 10 mA flowing through each of the resistors, thus producing the desired 500 mV dc bias for the inputs to the ADL5373.

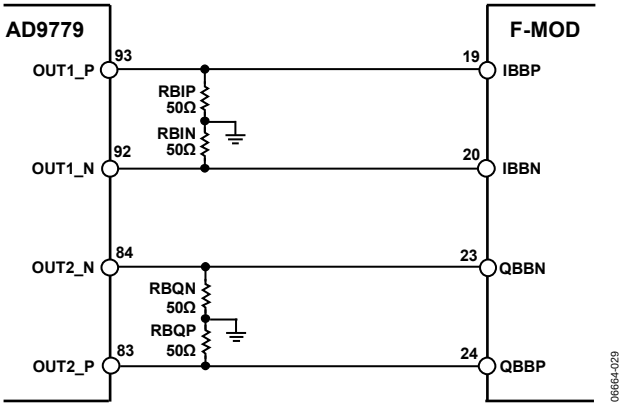

Figure 29. Interface Between the AD9779 and ADL5373 with 50 Ω Resistors to Ground to Establish the 500 mV DC Bias for the ADL5373 Baseband Inputs

The AD9779 output currents have a swing that ranges from 0 mA to 20 mA. With the 50 Ω resistors in place, the ac voltage swing going into the ADL5373 baseband inputs ranges from 0 V to 1 V. A full-scale sine wave out of the AD9779 can be described as a 1 V p-p single-ended (or 2 V p-p differential) sine wave with a 500 mV dc bias.

LIMITING THE AC SWING

There are situations in which it is desirable to reduce the ac voltage swing for a given DAC output current. This can be achieved through the addition of another resistor to the interface. This resistor is placed in the shunt between each side of the differential pair, as shown in Figure 30. It has the effect of reducing the ac swing without changing the dc bias already established by the 50 Ω resistors.

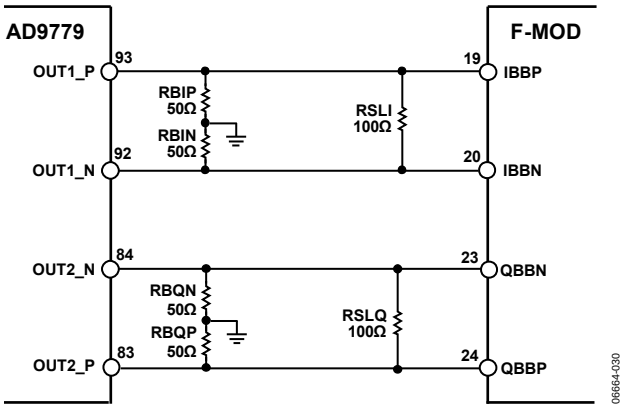

Figure 30. AC Voltage Swing Reduction Through the Introduction of a Shunt Resistor Between a Differential Pair

The value of this ac voltage swing limiting resistor is chosen based on the desired ac voltage swing. Figure 31 shows the relationship between the swing limiting resistor and the peak-to-peak ac swing that it produces when 50 Ω bias setting resistors are used.

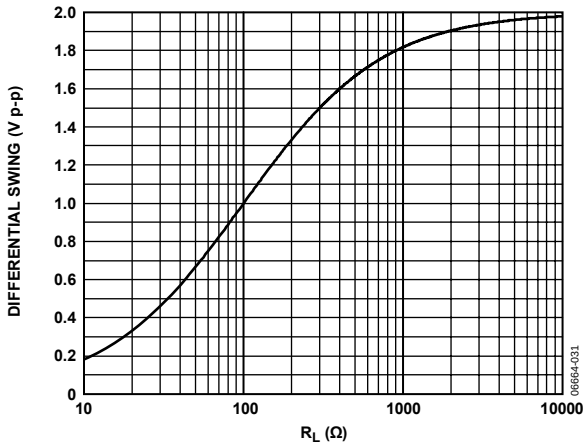

Figure 31. Relationship Between the AC Swing Limiting Resistor and the Peak-to-Peak Voltage Swing with 50 Ω Bias Setting Resistors

FILTERING

It is necessary to low-pass filter the DAC outputs to remove images when driving a modulator. The interface for setting up the biasing and ac swing that was described in the Limiting the AC Swing section lends itself well to the introduction of such a filter. The filter can be inserted between the dc bias setting resistors and the ac swing limiting resistor, which establishes the input and output impedances for the filter.

An example is shown in Figure 32 with a third-order, Bessel low-pass filter with a 3 dB frequency of 10 MHz. Matching input and output impedances makes the filter design easier, so the shunt resistor chosen is 100 Ω, producing an ac swing of 1 V p-p differential. The frequency response of this filter is shown in Figure 33.

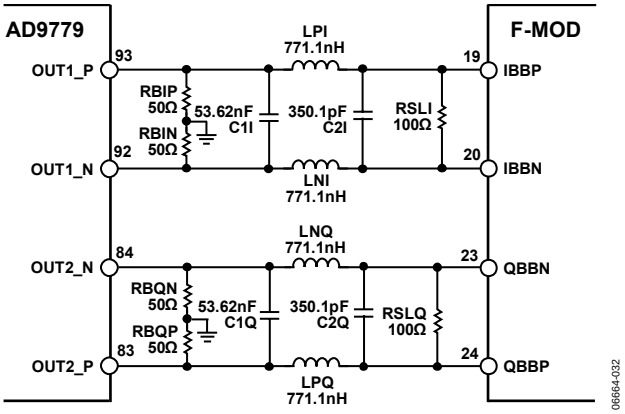

Figure 32. DAC Modulator Interface with 10 MHz Third-Order Bessel Filter

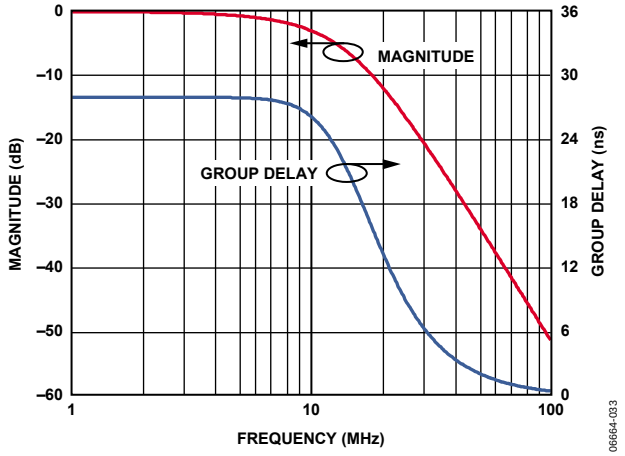

Figure 33. Frequency Response for DAC Modulator Interface with 10 MHz Third-Order Bessel Filter

USING THE AD9779 AUXILIARY DAC FOR CARRIER FEEDTHROUGH NULLING

The AD9779 features an auxiliary DAC that can be used to inject small currents into the differential outputs for each main DAC channel. This feature can be used to produce the small offset voltages necessary to null out the carrier feedthrough from the modulator. Figure 34 shows the interface required to use the auxiliary DACs, which adds four resistors to the interface.

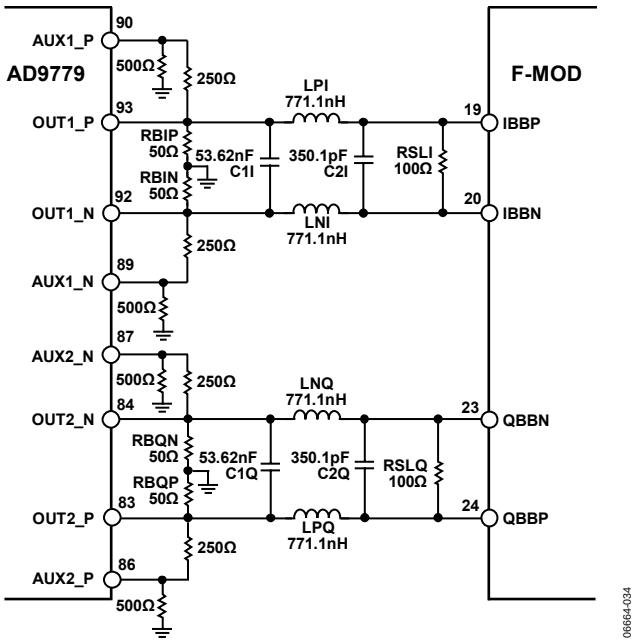

Figure 34. DAC Modulator Interface with Auxiliary DAC Resistors

WiMAX OPERATION

Figure 35 shows the first and second adjacent channel power ratios (10 MHz offset and 20 MHz offset), and the 30 MHz offset noise floor vs. output power for a 10 MHz 1024-OFDMA waveform at 2600 MHz.

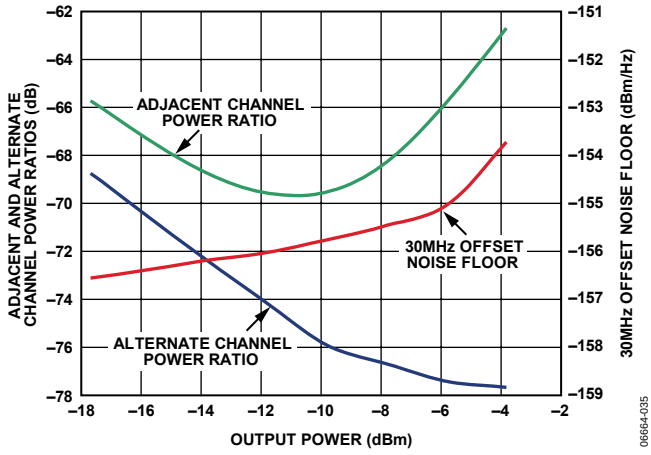

Figure 35. Adjacent and Alternate Channel Power Ratios and 30 MHz Offset Noise Floor vs. Channel Power for a 10 MHz 1024-OFDMA Waveform at 2600 MHz; LO Power = 0 dBm

Figure 35 illustrates that optimal performance is achieved when the output power from the modulator is −10 dBm or greater. The noise floor rises with increasing output power, but at less than half the rate at which ACPR degrades. Therefore, operating at powers greater than −10 dBm can improve the signal-to-noise ratio.

Figure 36 shows the error-vector magnitude (EVM) vs. output power for a 10 MHz, 1024-OFDMA waveform at 2600 MHz.

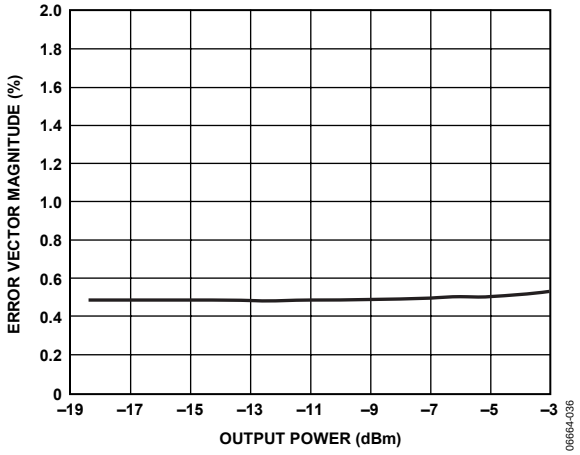

Figure 36. Error Vector Magnitude (EVM) vs. Output Power for 10 MHz, 1024-OFDMA Waveform at 2600 MHz; LO Power = 0 dBm

LO GENERATION USING PLLs

Analog Devices has a line of PLLs that can be used for generating the LO signal. Table 4 lists the PLLs together with their maximum frequency and phase noise performance.

Table 4. Analog Devices PLL Selection Table

Part	Frequency f_{IN} (MHz)	Phase Noise @ 1 kHz Offset and 200 kHz PFD (dBc/Hz)
ADF4110	550	−91 @ 540 MHz
ADF4111	1200	−87 @ 900 MHz
ADF4112	3000	−90 @ 900 MHz
ADF4113	4000	−91 @ 900 MHz
ADF4116	550	−89 @ 540 MHz
ADF4117	1200	−87 @ 900 MHz
ADF4118	3000	−90 @ 900 MHz

The ADF4360 comes as a family of chips, with nine operating frequency ranges. A device is chosen depending on the local oscillator frequency required. Although the use of the integrated synthesizer may come at the expense of slightly degraded noise performance from the ADL5373, it can be a cheaper alternative to a separate PLL and VCO solution. Table 5 shows the options available.

Table 5. ADF4360 Family Operating Frequencies

Part	Output Frequency Range (MHz)
ADF4360-0	2400 to 2725
ADF4360-1	2050 to 2450
ADF4360-2	1850 to 2150
ADF4360-3	1600 to 1950
ADF4360-4	1450 to 1750
ADF4360-5	1200 to 1400
ADF4360-6	1050 to 1250
ADF4360-7	350 to 1800
ADF4360-8	65 to 400

TRANSMIT DAC OPTIONS

The AD9779 recommended in the previous sections of this data sheet is not the only DAC that can be used to drive the ADL5373. There are other appropriate DACs, depending on the level of performance required. Table 6 lists the dual TxDACs offered by Analog Devices.

Table 6. Dual TxDAC Selection Table

Part	Resolution (Bits)	Update Rate (MSPS Minimum)
AD9709	8	125
AD9761	10	40
AD9763	10	125
AD9765	12	125
AD9767	14	125
AD9773	12	160
AD9775	14	160
AD9777	16	160
AD9776	12	1000
AD9778	14	1000
AD9779	16	1000

All DACs listed have nominal bias levels of 0.5 V and use the same simple DAC modulator interface that is shown in Figure 32.

MODULATOR/DEMODULATOR OPTIONS

Table 7 lists other Analog Devices modulators and demodulators.

Table 7. Modulator/Demodulator Options

Part No.	Modulator/ Demodulator	Frequency Range (MHz)	Comments
AD8345	Modulator	140 to 1000	
AD8346	Modulator	800 to 2500	
AD8349	Modulator	700 to 2700	
ADL5390	Modulator	20 to 2400	External quadrature
ADL5385	Modulator	50 to 2200	
ADL5370	Modulator	300 to 1000	
ADL5371	Modulator	500 to 1500	
ADL5372	Modulator	1500 to 2500	
ADL5374	Modulator	3000 to 4000	
AD8347	Demodulator	800 to 2700	
AD8348	Demodulator	50 to 1000	
AD8340	Vector modulator	700 to 1000	
AD8341	Vector modulator	1500 to 2400	

EVALUATION BOARD

A populated RoHS-compliant evaluation board is available for evaluation of the ADL5373. The ADL5373 package has an exposed paddle on the underside. This exposed paddle must be soldered to the board (see the Power Supply and Grounding section). The evaluation board has no components on the underside so heat can be applied to the underside for easy removal and replacement of the ADL5373.

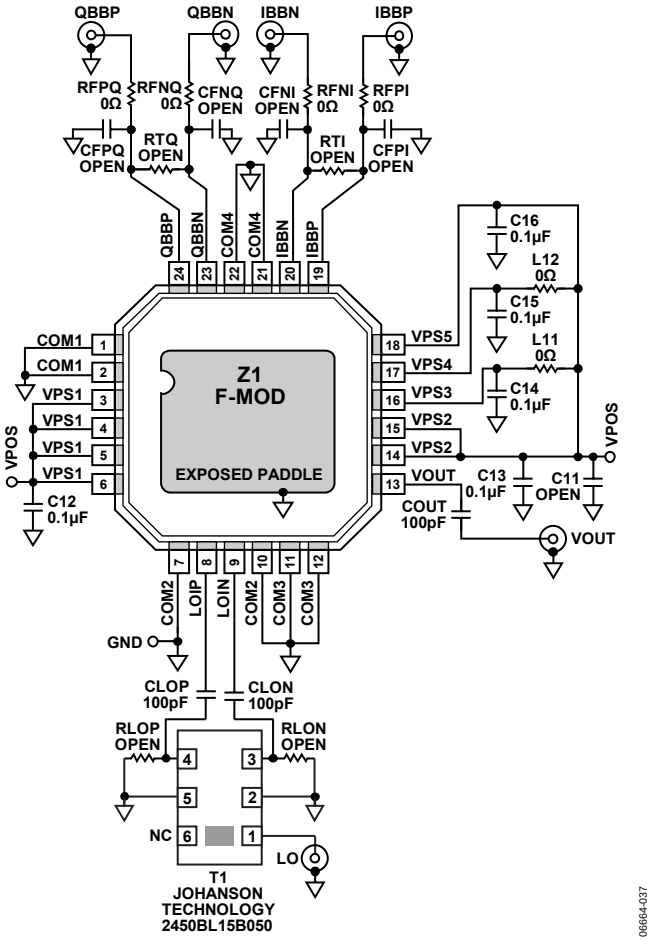

Figure 37. ADL5373 Evaluation Board Schematic

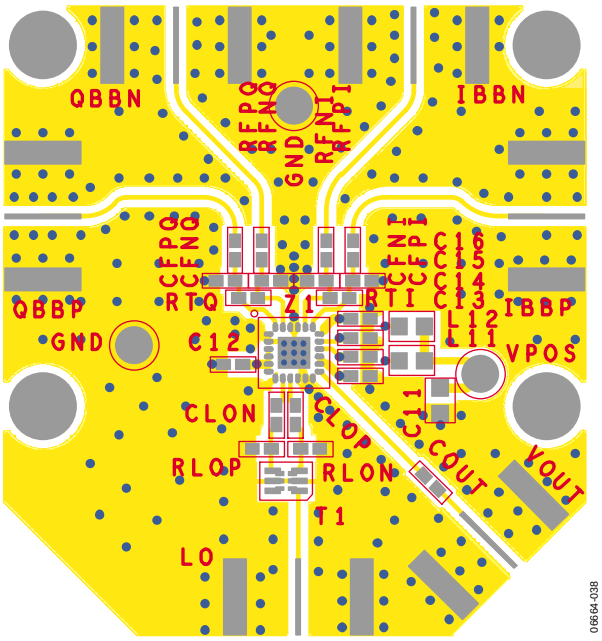

Figure 38. Evaluation Board Layout, Top Layer

Table 8. Evaluation Board Configuration Options

Component	Description	Default Condition
VPOS, GND	Power Supply and Ground Clip Leads.	Not applicable
RFPI, RFNI, RFPQ, RFNQ, CFPI, CFNI, CFPQ, CFNQ, RTQ, RTI	Baseband Input Filters. These components can be used to implement a low-pass filter for the baseband signals. See the Filtering section.	RFNQ, RFPQ, RFNI, RFPI = 0 Ω (0402) CFNQ, CFPQ, CFNI, CFPI = open (0402) RTQ, RTI = open (0402)

CHARACTERIZATION SETUP

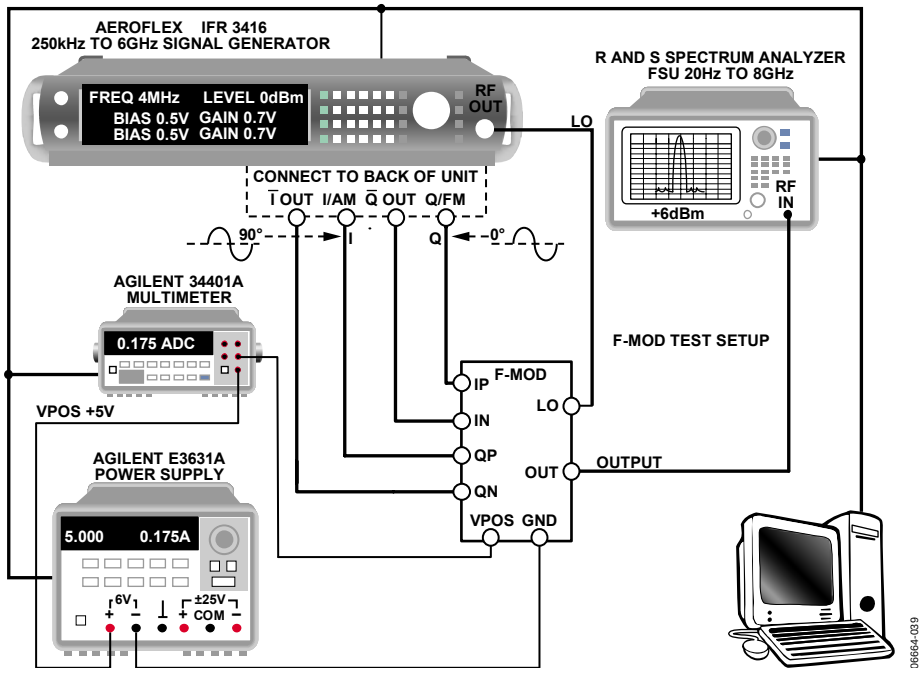

Figure 39. Characterization Bench Setup

The primary setup used to characterize the ADL5373 is shown in Figure 39. This setup was used to evaluate the product as a single-sideband modulator. The Aeroflex signal generator supplied the LO and differential I and Q baseband signals to the device under test, DUT. The typical LO drive was 0 dBm. The I-channel is driven by a sine wave, and the Q-channel is driven by a cosine wave. The lower sideband is the single-sideband (SSB) output.

The majority of characterization for the ADL5373 was performed using a 1 MHz sine wave signal with a 500 mV common-mode voltage applied to the baseband signals of the DUT. The baseband signal path was calibrated to ensure that the V_{IOS} and V_{QOS} offsets on the baseband inputs were minimized, as close as possible, to 0 V before connecting to the DUT.

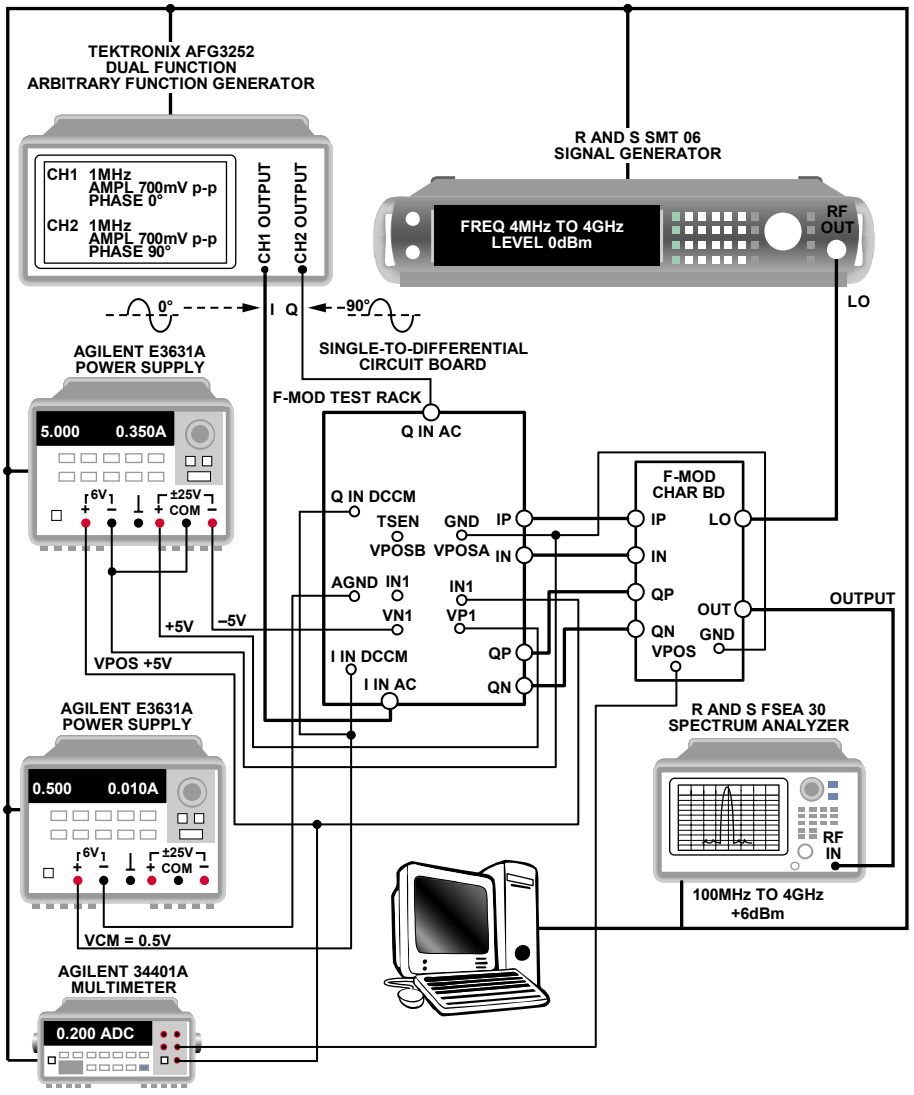

Figure 40. Setup for Baseband Frequency Sweep and Undesired Sideband Nulling

The setup used to evaluate baseband frequency sweep and undesired sideband nulling of the ADL5373 is shown in Figure 40. The interface board has circuitry that converts the single-ended I input and Q input from the arbitrary function generator to differential I and Q baseband signals with a dc bias of 500 mV.

Undesired sideband nulling was achieved through an iterative process of adjusting amplitude and phase on the Q-channel. See the Sideband Suppression Optimization section for detailed information on sideband nulling.

OUTLINE DIMENSIONS

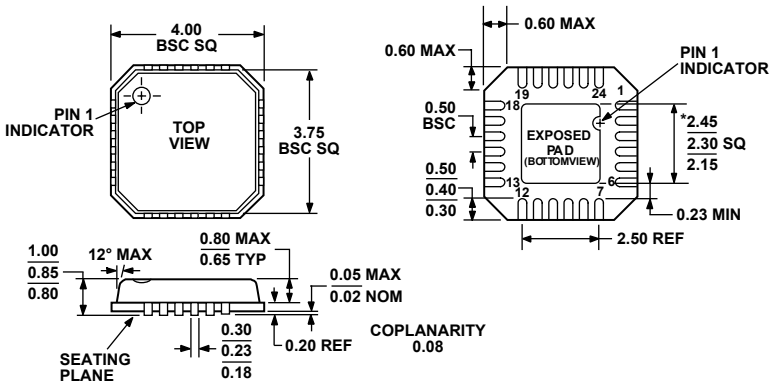

*COMPLIANT TO JEDEC STANDARDS MO-220-VGGD-2
EXCEPT FOR EXPOSED PAD DIMENSION

Figure 41. 24-Lead Lead Frame Chip Scale Package [LFCSP_VQ]
4 mm × 4 mm Body, Very Thin Quad
(CP-24-2)
Dimensions shown in millimeters

ORDERING GUIDE

Model	Temperature Range	Package Description	Package Option	Ordering Quantity
ADL5373ACPZ-R7[1]	−40°C to +85°C	24-Lead LFCSP_VQ, 7" Tape and Reel	CP-24-2	1,500
ADL5373ACPZ-WP[1]	−40°C to +85°C	24-Lead LFCSP_VQ, Waffle Pack	CP-24-2	64
ADL5373-EVALZ[1]		Evaluation Board		

[1] Z = RoHS Compliant Part.

©2007–2008 Analog Devices, Inc. All rights reserved. Trademarks and registered trademarks are the property of their respective owners.
D06664-0-2/08(A)