High Voltage Latch-Up Proof, 4-/8-Channel Multiplexers

Data Sheet

ADG5408/ADG5409

FEATURES

Latch-up proof
8 kV human body model (HBM) ESD rating
Low on resistance (13.5 Ω)
±9 V to ±22 V dual-supply operation
9 V to 40 V single-supply operation
48 V supply maximum ratings
Fully specified at ±15 V, ±20 V, +12 V, and +36 V
V_{SS} to V_{DD} analog signal range

APPLICATIONS

Relay replacement
Automatic test equipment
Data acquisition
Instrumentation
Avionics
Audio and video switching
Communication systems

FUNCTIONAL BLOCK DIAGRAMS

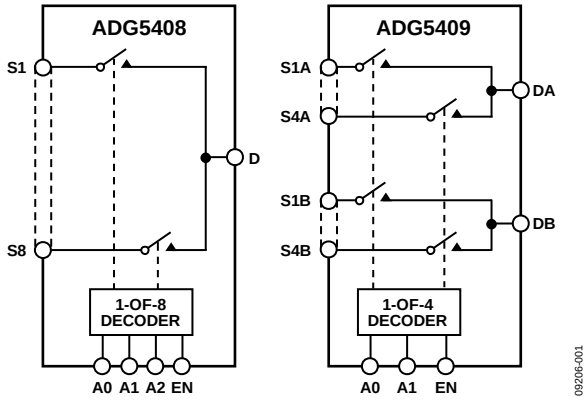

Figure 1.

GENERAL DESCRIPTION

The ADG5408/ADG5409 are monolithic CMOS analog multiplexers comprising eight single channels and four differential channels, respectively. The ADG5408 switches one of eight inputs to a common output, as determined by the 3-bit binary address lines, A0, A1, and A2. The ADG5409 switches one of four differential inputs to a common differential output, as determined by the 2-bit binary address lines, A0 and A1.

An EN input on both devices enables or disables the device. When EN is disabled, all channels switch off. The on-resistance profile is very flat over the full analog input range, which ensures good linearity and low distortion when switching audio signals. High switching speed also makes the parts suitable for video signal switching.

Each switch conducts equally well in both directions when on, and each switch has an input signal range that extends to the power supplies. In the off condition, signal levels up to the supplies are blocked.

The ADG5408/ADG5409 do not have V_L pins; rather, the logic power supply is generated internally by an on-chip voltage generator.

PRODUCT HIGHLIGHTS

1. Trench isolation guards against latch-up. A dielectric trench separates the P and N channel transistors thereby preventing latch-up even under severe overvoltage conditions.
2. Low R_{ON}.
3. Dual-supply operation. For applications where the analog signal is bipolar, the ADG5408/ADG5409 can be operated from dual supplies up to ±22 V.
4. Single-supply operation. For applications where the analog signal is unipolar, the ADG5408/ADG5409 can be operated from a single rail power supply up to 40 V.
5. 3 V logic compatible digital inputs: V_{INH} = 2.0 V, V_{INL} = 0.8 V.
6. No V_L logic power supply required.

Rev. B
Information furnished by Analog Devices is believed to be accurate and reliable. However, no responsibility is assumed by Analog Devices for its use, nor for any infringements of patents or other rights of third parties that may result from its use. Specifications subject to change without notice. No license is granted by implication or otherwise under any patent or patent rights of Analog Devices. Trademarks and registered trademarks are the property of their respective owners.

One Technology Way, P.O. Box 9106, Norwood, MA 02062-9106, U.S.A.
Tel: 781.329.4700 **www.analog.com**
Fax: 781.461.3113 **©2010–2012 Analog Devices, Inc. All rights reserved.**

TABLE OF CONTENTS

Features ... 1
Applications ... 1
Functional Block Diagrams ... 1
General Description ... 1
Product Highlights ... 1
Revision History ... 2
Specifications ... 3
±15 V Dual Supply ... 3
±20 V Dual Supply ... 4
12 V Single Supply ... 5
36 V Single Supply ... 6
Continuous Current per Channel, Sx or D ... 8
Absolute Maximum Ratings ... 9
ESD Caution ... 9
Pin Configurations and Function Descriptions ... 10
Typical Performance Characteristics ... 12
Test Circuits ... 16
Terminology ... 18
Trench Isolation ... 19
Applications Information ... 20
Outline Dimensions ... 21
Ordering Guide ... 22

REVISION HISTORY

5/12—Rev. A to Rev. B

Removed Automotive Information (Throughout) ... 1
Changes to Ordering Guide ... 22
Deleted Automotive Products Section ... 22

6/11—Rev. 0 to Rev. A

Change to Features Section ... 1
Change to I_{SS} Parameter, Table 2 ... 5
Changes to Figure 3 ... 10
Changes to Figure 5 ... 11
Updated Outline Dimensions ... 21
Changes to Ordering Guide ... 21
Added Automotive Products Section ... 21

7/10—Revision 0: Initial Version

SPECIFICATIONS

±15 V DUAL SUPPLY

V_{DD} = +15 V ± 10%, V_{SS} = −15 V ± 10%, GND = 0 V, unless otherwise noted.

Table 1.

Parameter	25°C	−40°C to +85°C	−40°C to +125°C	Unit	Test Conditions/Comments
ANALOG SWITCH					
Analog Signal Range			V_{DD} to V_{SS}	V	
On Resistance, R_{ON}	13.5			Ω typ	V_S = ±10 V, I_S = −10 mA; see Figure 26
	15	18	22	Ω max	V_{DD} = +13.5 V, V_{SS} = −13.5 V
On-Resistance Match Between Channels, ΔR_{ON}	0.3			Ω typ	V_S = ±10 V, I_S = −10 mA
	0.8	1.3	1.4	Ω max	
On-Resistance Flatness, $R_{FLAT\ (ON)}$	1.8			Ω typ	V_S = ±10 V, I_S = −10 mA
	2.2	2.6	3	Ω max	
LEAKAGE CURRENTS					V_{DD} = +16.5 V, V_{SS} = −16.5 V
Source Off Leakage, I_S (Off)	±0.05			nA typ	V_S = ±10 V, V_D = ∓10 V; see Figure 29
	±0.25	±1	±7	nA max	
Drain Off Leakage, I_D (Off)	±0.1			nA typ	V_S = ±10 V, V_D = ∓10 V; see Figure 29
	±0.4	±4	±30	nA max	
Channel On Leakage, I_D (On), I_S (On)	±0.1			nA typ	V_S = V_D = ±10 V; see Figure 25
	±0.4	±4	±30	nA max	
DIGITAL INPUTS					
Input High Voltage, V_{INH}			2.0	V min	
Input Low Voltage, V_{INL}			0.8	V max	
Input Current, I_{INL} or I_{INH}	0.002			µA typ	V_{IN} = V_{GND} or V_{DD}
			±0.1	µA max	
Digital Input Capacitance, C_{IN}	3			pF typ	
DYNAMIC CHARACTERISTICS[1]					
Transition Time, $t_{TRANSITION}$	170			ns typ	R_L = 300 Ω, C_L = 35 pF
	217	258	292	ns max	V_S = 10 V; see Figure 32
t_{ON} (EN)	140			ns typ	R_L = 300 Ω, C_L = 35 pF
	175	213	242	ns max	V_S = 10 V; see Figure 34
t_{OFF} (EN)	130			ns typ	R_L = 300 Ω, C_L = 35 pF
	161	183	198	ns max	V_S = 10 V; see Figure 34
Break-Before-Make Time Delay, t_D	50			ns typ	R_L = 300 Ω, C_L = 35 pF
			16	ns min	V_{S1} = V_{S2} = 10 V; see Figure 33
Charge Injection, Q_{INJ}	115			pC typ	V_S = 0 V, R_S = 0 Ω, C_L = 1 nF; see Figure 35
Off Isolation	−60			dB typ	R_L = 50 Ω, C_L = 5 pF, f = 1 MHz; see Figure 28
Channel-to-Channel Crosstalk	−60			dB typ	R_L = 50 Ω, C_L = 5 pF, f = 1 MHz; see Figure 27
Total Harmonic Distortion + Noise	0.01			% typ	R_L = 1 kΩ, 15 V p-p, f = 20 Hz to 20 kHz; see Figure 30
−3 dB Bandwidth					R_L = 50 Ω, C_L = 5 pF; see Figure 31
ADG5408	50			MHz typ	
ADG5409	87			MHz typ	
Insertion Loss	0.9			dB typ	R_L = 50 Ω, C_L = 5 pF, f = 1 MHz; Figure 31
C_S (Off)	15			pF typ	V_S = 0 V, f = 1 MHz
C_D (Off)					
ADG5408	102			pF typ	V_S = 0 V, f = 1 MHz
ADG5409	50			pF typ	V_S = 0 V, f = 1 MHz

Parameter	25°C	−40°C to +85°C	−40°C to +125°C	Unit	Test Conditions/Comments
C_D (On), C_S (On)					
ADG5408	133			pF typ	V_S = 0 V, f = 1 MHz
ADG5409	81			pF typ	V_S = 0 V, f = 1 MHz
POWER REQUIREMENTS					V_{DD} = +16.5 V, V_{SS} = −16.5 V
I_{DD}	45			µA typ	Digital inputs = 0 V or V_{DD}
	55		70	µA max	
I_{SS}	0.001			µA typ	Digital inputs = 0 V or V_{DD}
			1	µA max	
V_{DD}/V_{SS}			±9/±22	V min/V max	GND = 0 V

[1] Guaranteed by design; not subject to production test.

±20 V DUAL SUPPLY

V_{DD} = +20 V ± 10%, V_{SS} = −20 V ± 10%, GND = 0 V, unless otherwise noted.

Table 2.

Parameter	25°C	−40°C to +85°C	−40°C to +125°C	Unit	Test Conditions/Comments
ANALOG SWITCH					
Analog Signal Range			V_{DD} to V_{SS}	V	
On Resistance, R_{ON}	12.5			Ω typ	V_S = ±15 V, I_S = −10 mA; see Figure 26
	14	17	21	Ω max	V_{DD} = +18 V, V_{SS} = −18 V
On-Resistance Match Between Channels, ΔR_{ON}	0.3			Ω typ	V_S = ±15 V, I_S = −10 mA
	0.8	1.3	1.4	Ω max	
On-Resistance Flatness, $R_{FLAT\ (ON)}$	2.3			Ω typ	V_S = ±15 V, I_S = −10 mA
	2.7	3.1	3.5	Ω max	
LEAKAGE CURRENTS					V_{DD} = +22 V, V_{SS} = −22 V
Source Off Leakage, I_S (Off)	±0.1			nA typ	V_S = ±15 V, V_D = ∓15 V; see Figure 29
	±0.25	±1	±7	nA max	
Drain Off Leakage, I_D (Off)	±0.15			nA typ	V_S = ±15 V, V_D = ∓15 V; see Figure 29
	±0.4	±4	±30	nA max	
Channel On Leakage, I_D (On), I_S (On)	±0.15			nA typ	V_S = V_D = ±15 V; see Figure 25
	±0.4	±4	±30	nA max	
DIGITAL INPUTS					
Input High Voltage, V_{INH}			2.0	V min	
Input Low Voltage, V_{INL}			0.8	V max	
Input Current, I_{INL} or I_{INH}	0.002			µA typ	V_{IN} = V_{GND} or V_{DD}
			±0.1	µA max	
Digital Input Capacitance, C_{IN}	3			pF typ	
DYNAMIC CHARACTERISTICS[1]					
Transition Time, $t_{TRANSITION}$	160			ns typ	R_L = 300 Ω, C_L = 35 pF
	207	237	262	ns max	V_S = 10 V; see Figure 32
t_{ON} (EN)	140			ns typ	R_L = 300 Ω, C_L = 35 pF
	165	194	218	ns max	V_S = 10 V; see Figure 34
t_{OFF} (EN)	133			ns typ	R_L = 300 Ω, C_L = 35 pF
	153	174	189	ns max	V_S = 10 V; see Figure 34
Break-Before-Make Time Delay, t_D	38			ns typ	R_L = 300 Ω, C_L = 35 pF
			11	ns min	V_{S1} = V_{S2} = 10 V; see Figure 33
Charge Injection, Q_{INJ}	155			pC typ	V_S = 0 V, R_S = 0 Ω, C_L = 1 nF; see Figure 35
Off Isolation	−60			dB typ	R_L = 50 Ω, C_L = 5 pF, f = 1 MHz; see Figure 28
Channel-to-Channel Crosstalk	−60			dB typ	R_L = 50 Ω, C_L = 5 pF, f = 1 MHz; see Figure 27

Parameter	25°C	−40°C to +85°C	−40°C to +125°C	Unit	Test Conditions/Comments
Total Harmonic Distortion + Noise	0.012			% typ	R_L = 1 kΩ, 20 V p-p, f = 20 Hz to 20 kHz; see Figure 30
−3 dB Bandwidth					R_L = 50 Ω, C_L = 5 pF; see Figure 31
ADG5408	50			MHz typ	
ADG5409	88			MHz typ	
Insertion Loss	0.8			dB typ	R_L = 50 Ω, C_L = 5 pF, f = 1 MHz; see Figure 31
C_S (Off)	17			pF typ	V_S = 0 V, f = 1 MHz
C_D (Off)					
ADG5408	98			pF typ	V_S = 0 V, f = 1 MHz
ADG5409	48			pF typ	V_S = 0 V, f = 1 MHz
C_D (On), C_S (On)					
ADG5408	128			pF typ	V_S = 0 V, f = 1 MHz
ADG5409	80			pF typ	V_S = 0 V, f = 1 MHz
POWER REQUIREMENTS					V_{DD} = +22 V, V_{SS} = −22 V
I_{DD}	50			µA typ	Digital inputs = 0 V or V_{DD}
	70		110	µA max	
I_{SS}	0.001			µA typ	Digital inputs = 0 V or V_{DD}
			1	µA max	
V_{DD}/V_{SS}			±9/±22	V min/V max	GND = 0 V

[1] Guaranteed by design; not subject to production test.

12 V SINGLE SUPPLY

V_{DD} = 12 V ± 10%, V_{SS} = 0 V, GND = 0 V, unless otherwise noted.

Table 3.

Parameter	25°C	−40°C to +85°C	−40°C to +125°C	Unit	Test Conditions/Comments
ANALOG SWITCH					
Analog Signal Range			0 V to V_{DD}	V	
On Resistance, R_{ON}	26			Ω typ	V_S = 0 V to 10 V, I_S = −10 mA; see Figure 26
	30	36	42	Ω max	V_{DD} = 10.8 V, V_{SS} = 0 V
On-Resistance Match Between Channels, ΔR_{ON}	0.3			Ω typ	V_S = 0 V to 10 V, I_S = −10 mA
	1	1.5	1.6	Ω max	
On-Resistance Flatness, $R_{FLAT\ (ON)}$	5.5			Ω typ	V_S = 0 V to 10 V, I_S = −10 mA
	6.5	8	12	Ω max	
LEAKAGE CURRENTS					V_{DD} = 13.2 V, V_{SS} = 0 V
Source Off Leakage, I_S (Off)	±0.02			nA typ	V_S = 1 V/10 V, V_D = 10 V/1 V; see Figure 29
	±0.25	±1	±7	nA max	
Drain Off Leakage, I_D (Off)	±0.05			nA typ	V_S = 1 V/10 V, V_D = 10 V/1 V; see Figure 29
	±0.4	±4	±30	nA max	
Channel On Leakage, I_D (On), I_S (On)	±0.05			nA typ	V_S = V_D = 1 V/10 V; see Figure 25
	±0.4	±4	±30	nA max	
DIGITAL INPUTS					
Input High Voltage, V_{INH}			2.0	V min	
Input Low Voltage, V_{INL}			0.8	V max	
Input Current, I_{INL} or I_{INH}	0.002			µA typ	V_{IN} = V_{GND} or V_{DD}
			±0.1	µA max	
Digital Input Capacitance, C_{IN}	3			pF typ	

Parameter	25°C	−40°C to +85°C	−40°C to +125°C	Unit	Test Conditions/Comments
DYNAMIC CHARACTERISTICS[1]					
Transition Time, $t_{TRANSITION}$	230			ns typ	R_L = 300 Ω, C_L = 35 pF
	321	388	430	ns max	V_S = 8 V; see Figure 32
t_{ON} (EN)	215			ns typ	R_L = 300 Ω, C_L = 35 pF
	276	345	397	ns max	V_S = 8 V; see Figure 34
t_{OFF} (EN)	134			ns typ	R_L = 300 Ω, C_L = 35 pF
	161	187	209	ns max	V_S = 8 V; see Figure 34
Break-Before-Make Time Delay, t_D	118			ns typ	R_L = 300 Ω, C_L = 35 pF
			55	ns min	V_{S1} = V_{S2} = 8 V; see Figure 33
Charge Injection, Q_{INJ}	45			pC typ	V_S = 6 V, R_S = 0 Ω, C_L = 1 nF; see Figure 35
Off Isolation	−60			dB typ	R_L = 50 Ω, C_L = 5 pF, f = 1 MHz; see Figure 28
Channel-to-Channel Crosstalk	−60			dB typ	R_L = 50 Ω, C_L = 5 pF, f = 1 MHz; see Figure 27
Total Harmonic Distortion + Noise	0.1			% typ	R_L = 1 kΩ, 6 V p-p, f = 20 Hz to 20 kHz; see Figure 30
−3 dB Bandwidth					R_L = 50 Ω, C_L = 5 pF; see Figure 31
ADG5408	35			MHz typ	
ADG5409	74			MHz typ	
Insertion Loss	−1.8			dB typ	R_L = 50 Ω, C_L = 5 pF, f = 1 MHz; see Figure 31
C_S (Off)	22			pF typ	V_S = 6 V, f = 1 MHz
C_D (Off)					
ADG5408	119			pF typ	V_S = 6 V, f = 1 MHz
ADG5409	59			pF typ	V_S = 6 V, f = 1 MHz
C_D (On), C_S (On)					
ADG5408	146			pF typ	V_S = 6 V, f = 1 MHz
ADG5409	86			pF typ	V_S = 6 V, f = 1 MHz
POWER REQUIREMENTS					V_{DD} = 13.2 V
I_{DD}	40			µA typ	Digital inputs = 0 V or V_{DD}
	50		65	µA max	
V_{DD}			9/40	V min/V max	GND = 0 V, V_{SS} = 0 V

[1] Guaranteed by design; not subject to production test.

36 V SINGLE SUPPLY

V_{DD} = 36 V ± 10%, V_{SS} = 0 V, GND = 0 V, unless otherwise noted.

Table 4.

Parameter	25°C	−40°C to +85°C	−40°C to +125°C	Unit	Test Conditions/Comments
ANALOG SWITCH					
Analog Signal Range			0 V to V_{DD}	V	
On Resistance, R_{ON}	14.5			Ω typ	V_S = 0 V to 30 V, I_S = −10 mA; see Figure 26
	16	19	23	Ω max	V_{DD} = 32.4 V, V_{SS} = 0 V
On-Resistance Match Between Channels, ΔR_{ON}	0.3			Ω typ	V_S = 0 V to 30 V, I_S = −10 mA
	0.8	1.3	1.4	Ω max	
On-Resistance Flatness, $R_{FLAT\ (ON)}$	3.5			Ω typ	V_S = 0 V to 30 V, I_S = −10 mA
	4.3	5.5	6.5	Ω max	
LEAKAGE CURRENTS					V_{DD} =39.6 V, V_{SS} = 0 V
Source Off Leakage, I_S (Off)	±0.1			nA typ	V_S = 1 V/30 V, V_D = 30 V/1 V; see Figure 29
	±0.25	±1	±7	nA max	

Parameter	25°C	−40°C to +85°C	−40°C to +125°C	Unit	Test Conditions/Comments
Drain Off Leakage, I_D (Off)	±0.15			nA typ	V_S = 1 V/30 V, V_D = 30 V/1 V; see Figure 29
	±0.4	±4	±30	nA max	
Channel On Leakage, I_D (On), I_S (On)	±0.15			nA typ	V_S = V_D = 1 V/30 V; see Figure 25
	±0.4	±4	±30	nA max	
DIGITAL INPUTS					
Input High Voltage, V_{INH}			2.0	V min	
Input Low Voltage, V_{INL}			0.8	V max	
Input Current, I_{INL} or I_{INH}	0.002			µA typ	V_{IN} = V_{GND} or V_{DD}
			±0.1	µA max	
Digital Input Capacitance, C_{IN}	3			pF typ	
DYNAMIC CHARACTERISTICS[1]					
Transition Time, $t_{TRANSITION}$	187			ns typ	R_L = 300 Ω, C_L = 35 pF
	242	257	281	ns max	V_S = 18 V; see Figure 32
t_{ON} (EN)	160			ns typ	R_L = 300 Ω, C_L = 35 pF
	195	219	237	ns max	V_S = 18 V; see Figure 34
t_{OFF} (EN)	147			ns typ	R_L = 300 Ω, C_L = 35 pF
	184	184	190	ns max	V_S = 18 V; see Figure 34
Break-Before-Make Time Delay, t_D	53			ns typ	R_L = 300 Ω, C_L = 35 pF
			17	ns min	V_{S1} = V_{S2} = 18 V; see Figure 33
Charge Injection, Q_{INJ}	150			pC typ	V_S = 18 V, R_S = 0 Ω, C_L = 1 nF; see Figure 35
Off Isolation	−60			dB typ	R_L = 50 Ω, C_L = 5 pF, f = 1 MHz; see Figure 28
Channel-to-Channel Crosstalk	−60			dB typ	R_L = 50 Ω, C_L = 5 pF, f = 1 MHz; see Figure 27
Total Harmonic Distortion + Noise	0.4			% typ	R_L = 1 kΩ, 18 V p-p, f = 20 Hz to 20 kHz; see Figure 30
−3 dB Bandwidth					R_L = 50 Ω, C_L = 5 pF; see Figure 31
ADG5408	45			MHz typ	
ADG5409	76			MHz typ	
Insertion Loss	−1			dB typ	R_L = 50 Ω, C_L = 5 pF, f = 1 MHz; see Figure 31
C_S (Off)	18			pF typ	V_S = 18 V, f = 1 MHz
C_D (Off)					
ADG5408	120			pF typ	V_S = 18 V, f = 1 MHz
ADG5409	60			pF typ	V_S = 18 V, f = 1 MHz
C_D (On), C_S (On)					
ADG5408	137			pF typ	V_S = 18 V, f = 1 MHz
ADG5409	80			pF typ	V_S = 18 V, f = 1 MHz
POWER REQUIREMENTS					V_{DD} = 39.6 V
I_{DD}	80			µA typ	Digital inputs = 0 V or V_{DD}
	100		130	µA max	
V_{DD}			9/40	V min/V max	GND = 0 V, V_{SS} = 0 V

[1] Guaranteed by design; not subject to production test.

CONTINUOUS CURRENT PER CHANNEL, Sx OR D

Table 5. ADG5408

Parameter	25°C	85°C	125°C	Unit
CONTINUOUS CURRENT, Sx OR D				
V_{DD} = +15 V, V_{SS} = −15 V				
TSSOP (θ_{JA} = 112.6°C/W)	100	44	16	mA maximum
LFCSP (θ_{JA} = 30.4°C/W)	170	54	16	mA maximum
V_{DD} = +20 V, V_{SS} = −20 V				
TSSOP (θ_{JA} = 112.6°C/W)	106	45	16	mA maximum
LFCSP (θ_{JA} = 30.4°C/W)	178	55	16	mA maximum
V_{DD} = 12 V, V_{SS} = 0 V				
TSSOP (θ_{JA} = 112.6°C/W)	81	39	15	mA maximum
LFCSP (θ_{JA} = 30.4°C/W)	140	51	16	mA maximum
V_{DD} = 36 V, V_{SS} = 0 V				
TSSOP (θ_{JA} = 112.6°C/W)	104	44	16	mA maximum
LFCSP (θ_{JA} = 30.4°C/W)	175	55	16	mA maximum

Table 6. ADG5409

Parameter	25°C	85°C	125°C	Unit
CONTINUOUS CURRENT, Sx OR D				
V_{DD} = +15 V, V_{SS} = −15 V				
TSSOP (θ_{JA} = 112.6°C/W)	75	37	15	mA maximum
LFCSP (θ_{JA} = 30.4°C/W)	130	49	16	mA maximum
V_{DD} = +20 V, V_{SS} = −20 V				
TSSOP (θ_{JA} = 112.6°C/W)	79	38	15	mA maximum
LFCSP (θ_{JA} = 30.4°C/W)	136	50	16	mA maximum
V_{DD} = 12 V, V_{SS} = 0 V				
TSSOP (θ_{JA} = 112.6°C/W)	60	32	14	mA maximum
LFCSP (θ_{JA} = 30.4°C/W)	105	44	16	mA maximum
V_{DD} = 36 V, V_{SS} = 0 V				
TSSOP (θ_{JA} = 112.6°C/W)	78	38	15	mA maximum
LFCSP (θ_{JA} = 30.4°C/W)	133	50	16	mA maximum

ABSOLUTE MAXIMUM RATINGS

T_A = 25°C, unless otherwise noted.

Table 7.

Parameter	Rating
V_{DD} to V_{SS}	48 V
V_{DD} to GND	−0.3 V to +48 V
V_{SS} to GND	+0.3 V to −48 V
Analog Inputs[1]	V_{SS} − 0.3 V to V_{DD} + 0.3 V or 30 mA, whichever occurs first
Digital Inputs[1]	V_{SS} − 0.3 V to V_{DD} + 0.3 V or 30 mA, whichever occurs first
Peak Current, Sx or D Pins	
ADG5408	370 mA (pulsed at 1 ms, 10% duty cycle maximum)
ADG5409	275 mA (pulsed at 1 ms, 10% duty cycle maximum)
Continuous Current, Sx or D[2]	Data + 15%
Temperature Range	
Operating	−40°C to +125°C
Storage	−65°C to +150°C
Junction Temperature	150°C
Thermal Impedance, θ_{JA}	
16-Lead TSSOP (4-Layer Board)	112.6°C/W
16-Lead LFCSP (4-Layer Board)	30.4°C/W
Reflow Soldering Peak Temperature, Pb Free	260(+0/−5)°C

[1] Overvoltages at the Ax, EN, Sx, and D pins are clamped by internal diodes. Limit current to the maximum ratings given.
[2] See Table 5.

Stresses above those listed under Absolute Maximum Ratings may cause permanent damage to the device. This is a stress rating only; functional operation of the device at these or any other conditions above those indicated in the operational section of this specification is not implied. Exposure to absolute maximum rating conditions for extended periods may affect device reliability.

Only one absolute maximum rating can be applied at any one time.

ESD CAUTION

ESD (electrostatic discharge) sensitive device. Charged devices and circuit boards can discharge without detection. Although this product features patented or proprietary protection circuitry, damage may occur on devices subjected to high energy ESD. Therefore, proper ESD precautions should be taken to avoid performance degradation or loss of functionality.

PIN CONFIGURATIONS AND FUNCTION DESCRIPTIONS

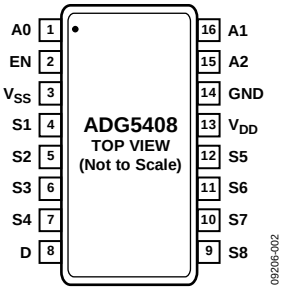

Figure 2. ADG5408 Pin Configuration (TSSOP)

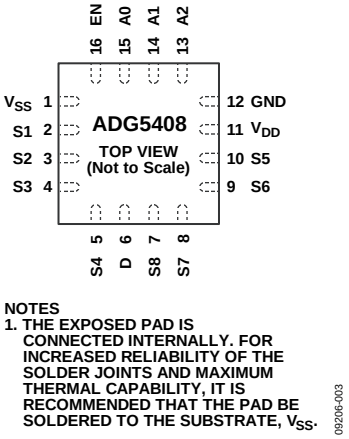

Figure 3. ADG5408 Pin Configuration (LFCSP)

Table 8. ADG5408 Pin Function Descriptions

Pin No.			
TSSOP	**LFCSP**	**Mnemonic**	**Description**
1	15	A0	Logic Control Input.
2	16	EN	Active High Digital Input. When low, the device is disabled and all switches are off. When high, Ax logic inputs determine on switches.
3	1	V_{SS}	Most Negative Power Supply Potential. In single-supply applications, this pin can be connected to ground.
4	2	S1	Source Terminal 1. This pin can be an input or an output.
5	3	S2	Source Terminal 2. This pin can be an input or an output.
6	4	S3	Source Terminal 3. This pin can be an input or an output.
7	5	S4	Source Terminal 4. This pin can be an input or an output.
8	6	D	Drain Terminal. This pin can be an input or an output.
9	7	S8	Source Terminal 8. This pin can be an input or an output.
10	8	S7	Source Terminal 7. This pin can be an input or an output.
11	9	S6	Source Terminal 6. This pin can be an input or an output.
12	10	S5	Source Terminal 5. This pin can be an input or an output.
13	11	V_{DD}	Most Positive Power Supply Potential.
14	12	GND	Ground (0 V) Reference.
15	13	A2	Logic Control Input.
16	14	A1	Logic Control Input.
	EP	Exposed Pad	The exposed pad is connected internally. For increased reliability of the solder joints and maximum thermal capability, it is recommended that the pad be soldered to the substrate, V_{SS}.

Table 9. ADG5408 Truth Table

A2	A1	A0	EN	On Switch
X	X	X	0	None
0	0	0	1	1
0	0	1	1	2
0	1	0	1	3
0	1	1	1	4
1	0	0	1	5
1	0	1	1	6
1	1	0	1	7
1	1	1	1	8

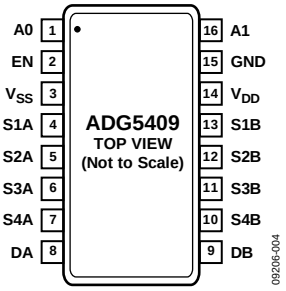

Figure 4. ADG5409 Pin Configuration (TSSOP)

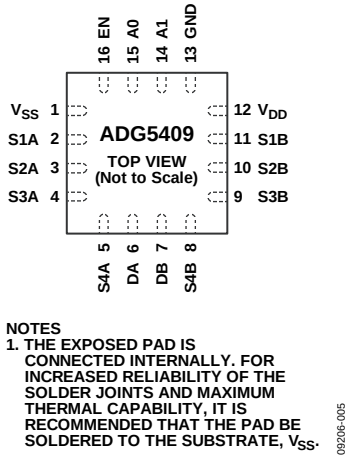

Figure 5. ADG5409 Pin Configuration (LFCSP)

Table 10. ADG5409 Pin Function Descriptions

Pin No.			
TSSOP	**LFCSP**	**Mnemonic**	**Description**
1	15	A0	Logic Control Input.
2	16	EN	Active High Digital Input. When low, the device is disabled and all switches are off. When high, Ax logic inputs determine on switches.
3	1	V_{SS}	Most Negative Power Supply Potential. In single-supply applications, this pin can be connected to ground.
4	2	S1A	Source Terminal 1A. This pin can be an input or an output.
5	3	S2A	Source Terminal 2A. This pin can be an input or an output.
6	4	S3A	Source Terminal 3A. This pin can be an input or an output.
7	5	S4A	Source Terminal 4A. This pin can be an input or an output.
8	6	DA	Drain Terminal A. This pin can be an input or an output.
9	7	DB	Drain Terminal B. This pin can be an input or an output.
10	8	S4B	Source Terminal 4B. This pin can be an input or an output.
11	9	S3B	Source Terminal 3B. This pin can be an input or an output.
12	10	S2B	Source Terminal 2B. This pin can be an input or an output.
13	11	S1B	Source Terminal 1B. This pin can be an input or an output.
14	12	V_{DD}	Most Positive Power Supply Potential.
15	13	GND	Ground (0 V) Reference.
16	14	A1	Logic Control Input.
	EP	Exposed Pad	The exposed pad is connected internally. For increased reliability of the solder joints and maximum thermal capability, it is recommended that the pad be soldered to the substrate, V_{SS}.

Table 11. ADG5409 Truth Table

A1	A0	EN	On Switch Pair
X	X	0	None
0	0	1	1
0	1	1	2
1	0	1	3
1	1	1	4

TYPICAL PERFORMANCE CHARACTERISTICS

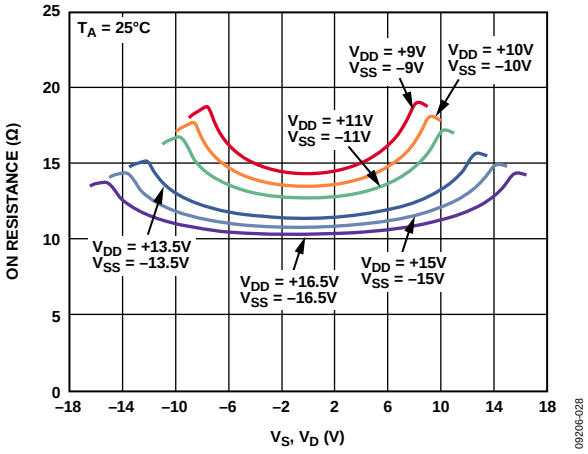

Figure 6. R_{ON} as a Function of V_S, V_D (Dual Supply)

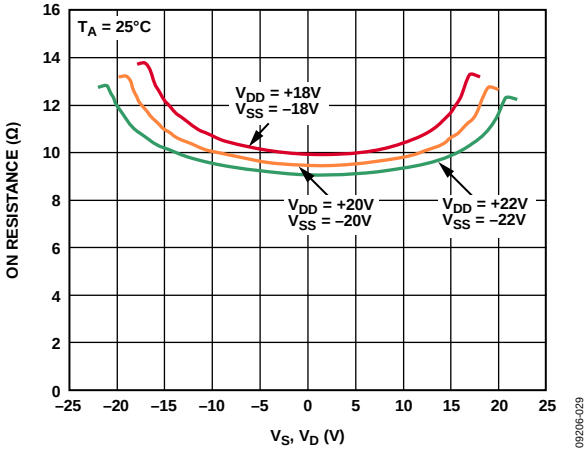

Figure 7. R_{ON} as a Function of V_S, V_D (Dual Supply)

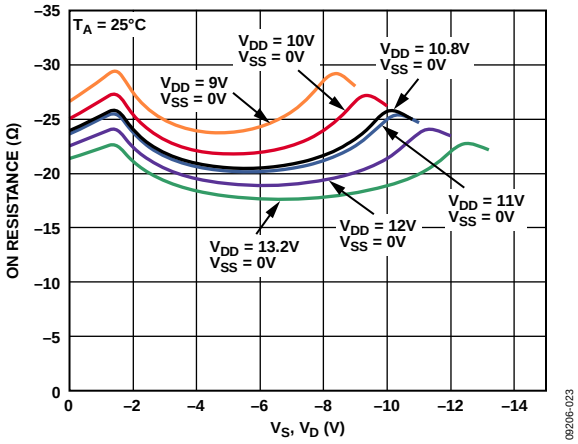

Figure 8. R_{ON} as a Function of V_S, V_D (Single Supply)

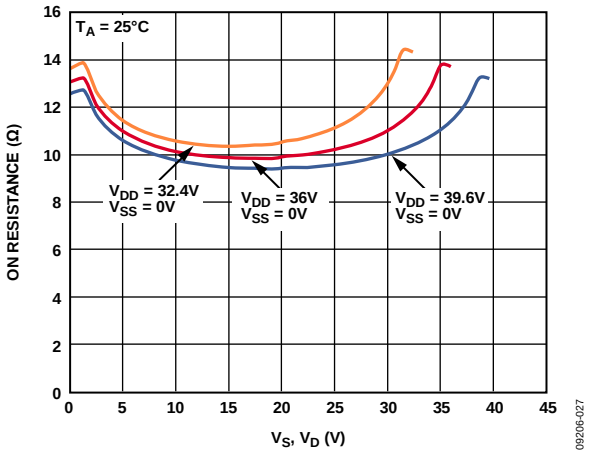

Figure 9. R_{ON} as a Function of V_S, V_D (Single Supply)

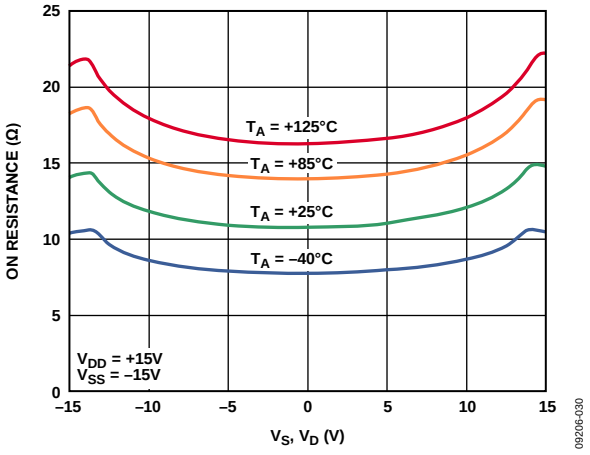

Figure 10. R_{ON} as a Function of V_S (V_D) for Different Temperatures, ±15 V Dual Supply

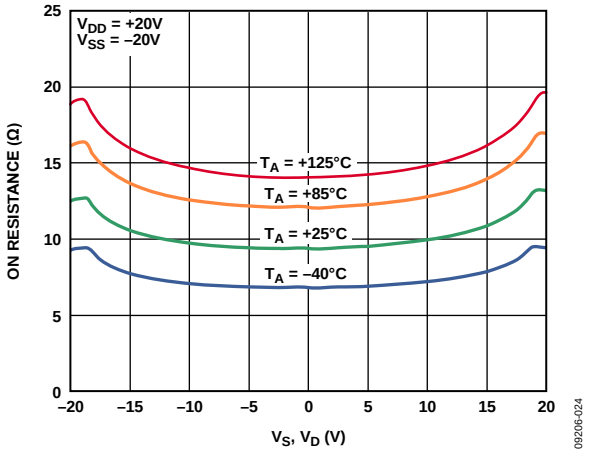

Figure 11. R_{ON} as a Function of V_S (V_D) for Different Temperatures, ±20 V Dual Supply

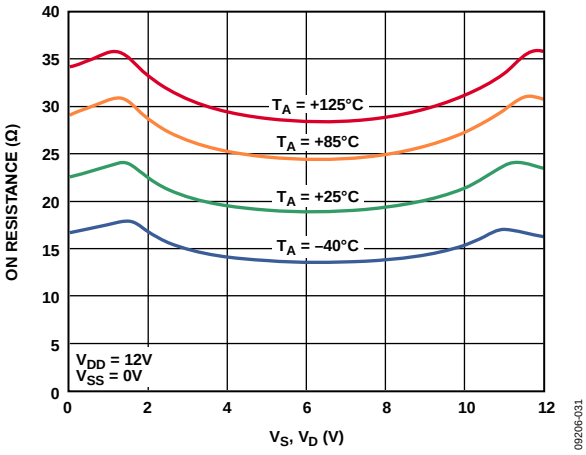

Figure 12. R_{ON} as a Function of V_S (V_D) for Different Temperatures, 12 V Single Supply

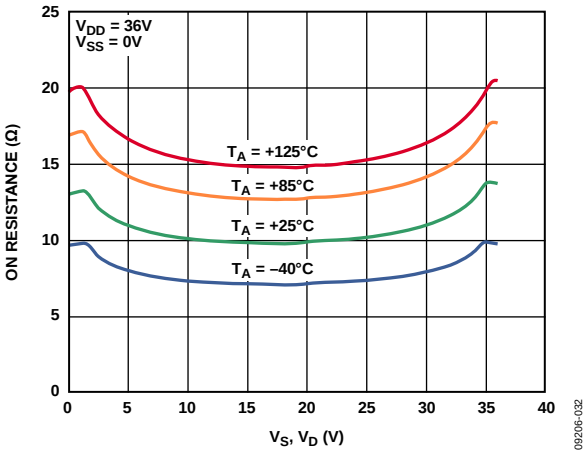

Figure 13. R_{ON} as a Function of V_D (V_S) for Different Temperatures, 36 V Single Supply

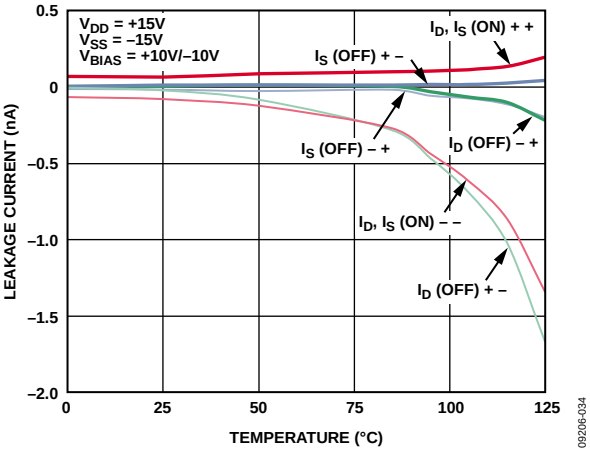

Figure 14. Leakage Currents vs. Temperature, ±15 V Dual Supply

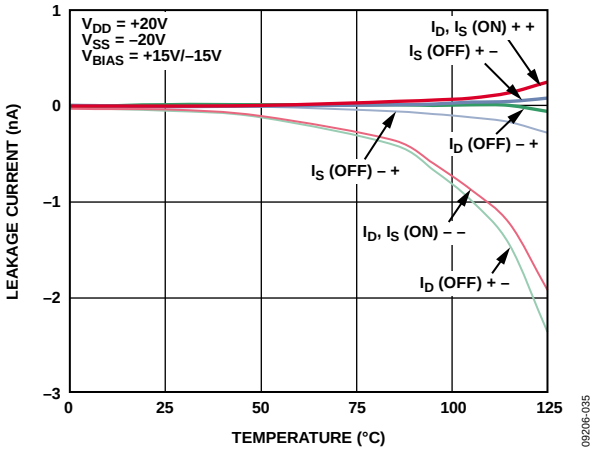

Figure 15. Leakage Currents vs. Temperature, ±20 V Dual Supply

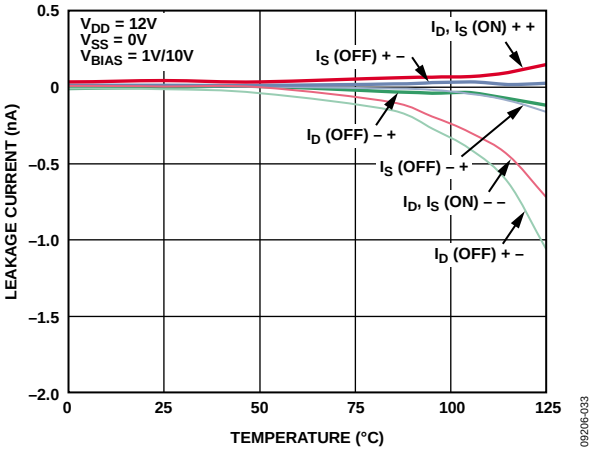

Figure 16. Leakage Currents vs. Temperature, 12 V Single Supply

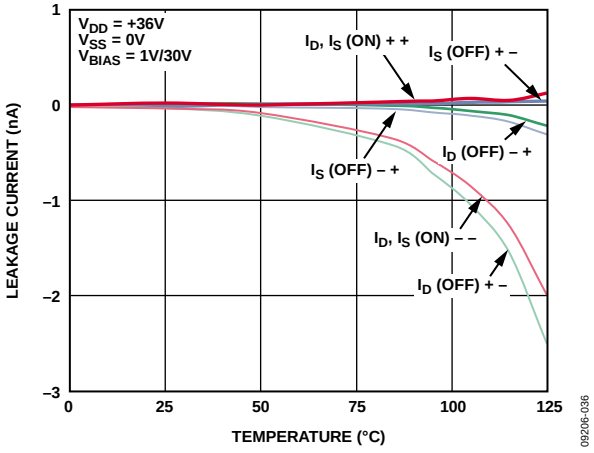

Figure 17. Leakage Currents vs. Temperature, 36 V Single Supply

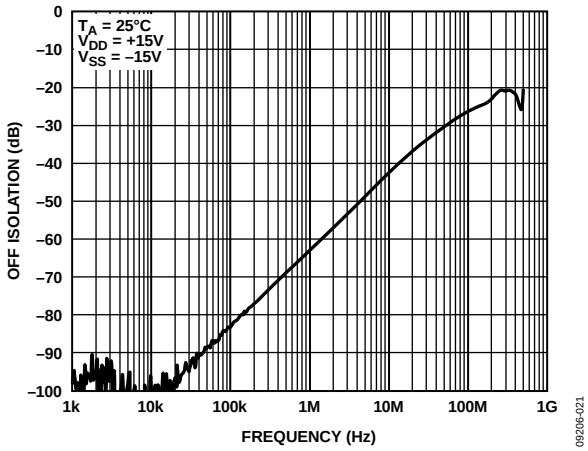

Figure 18. Off Isolation vs. Frequency, ±15 V Dual Supply

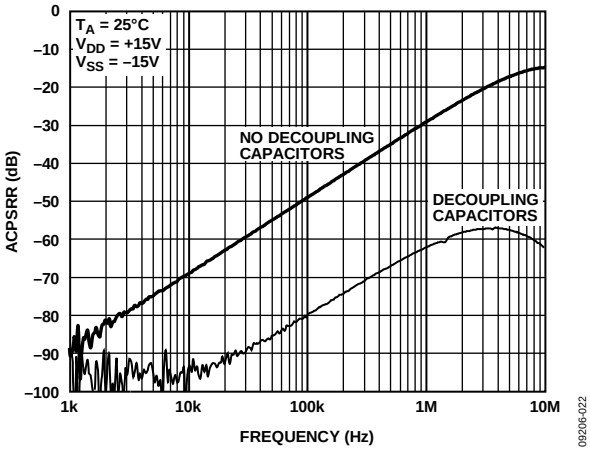

Figure 21. ACPSRR vs. Frequency, ±15 V Dual Supply

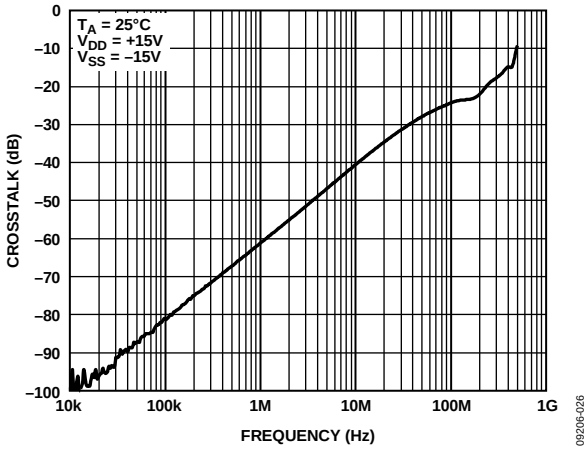

Figure 19. Crosstalk vs. Frequency, ±15 V Dual Supply

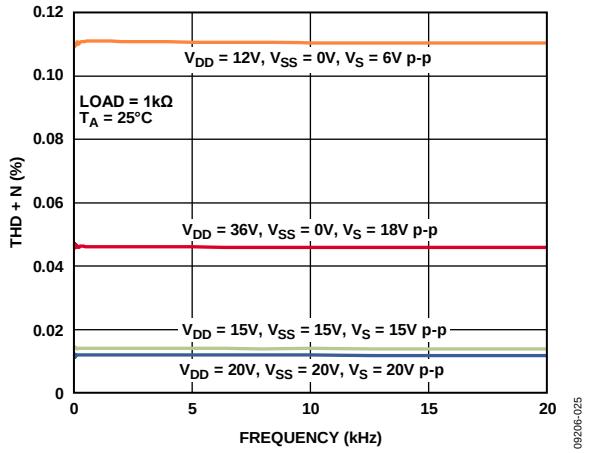

Figure 22. THD + N vs. Frequency

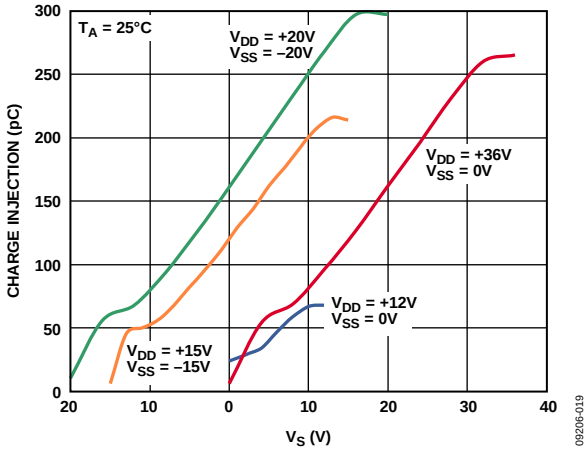

Figure 20. Charge Injection vs. Source Voltage

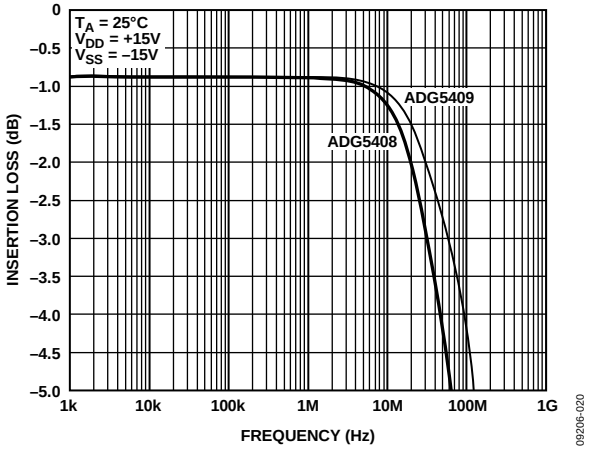

Figure 23. Bandwidth

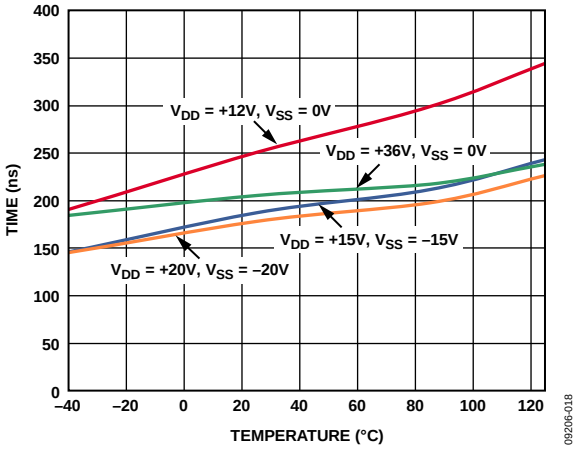

Figure 24. $t_{TRANSITION}$ Times vs. Temperature

TEST CIRCUITS

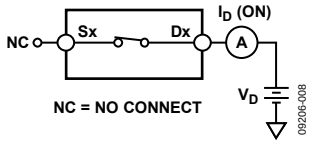

Figure 25. On Leakage

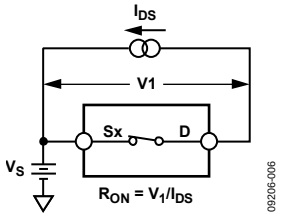

Figure 26. On Resistance

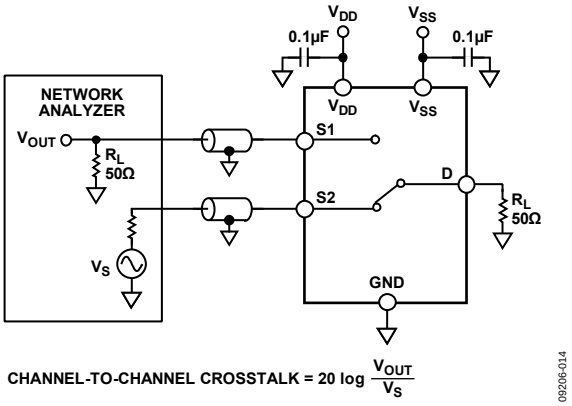

Figure 27. Channel-to-Channel Crosstalk

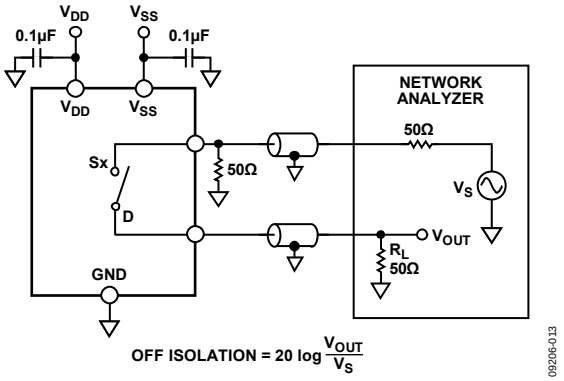

Figure 28. Off Isolation

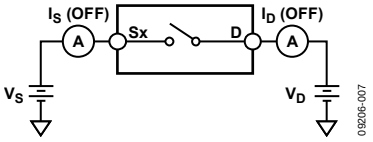

Figure 29. Off Leakage

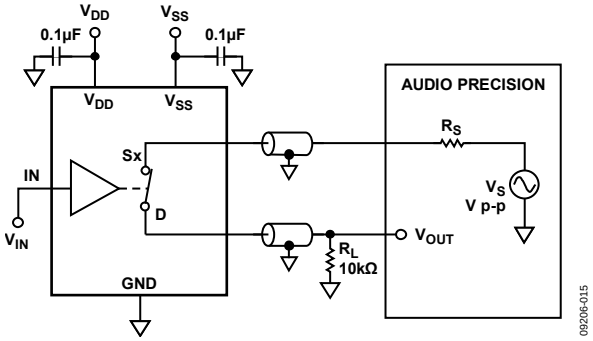

Figure 30. THD + Noise Figure

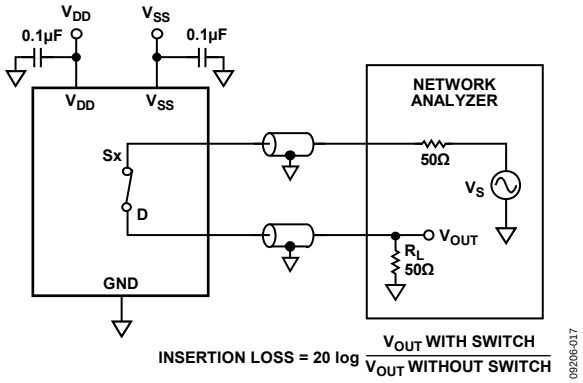

Figure 31. Bandwidth

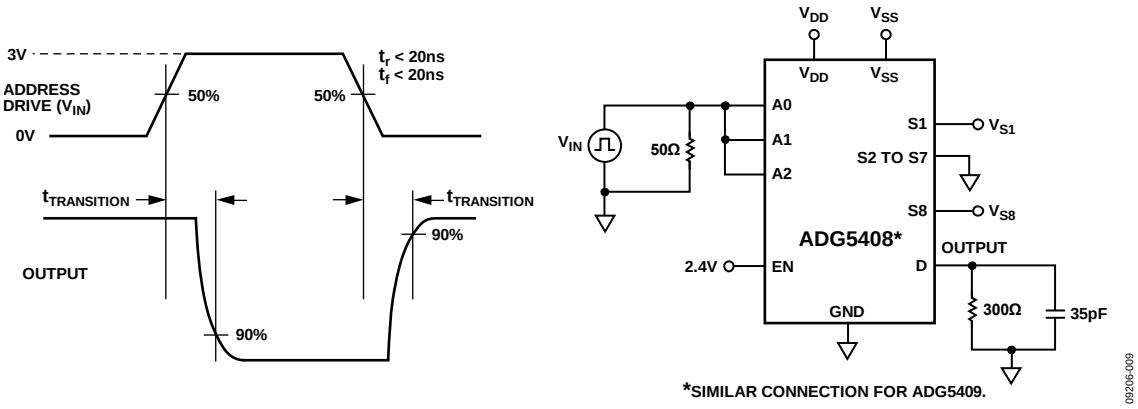

Figure 32. Address to Output Switching Times, $t_{TRANSITION}$

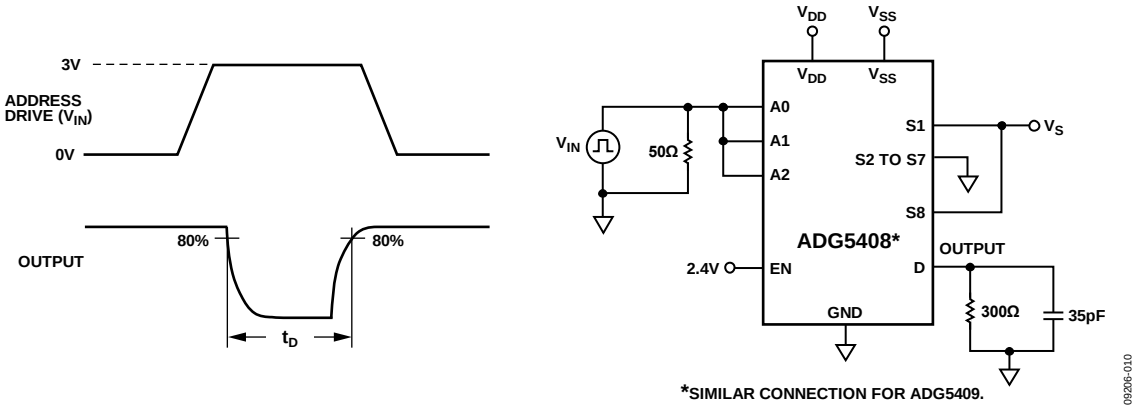

Figure 33. Break-Before-Make Delay, t_D

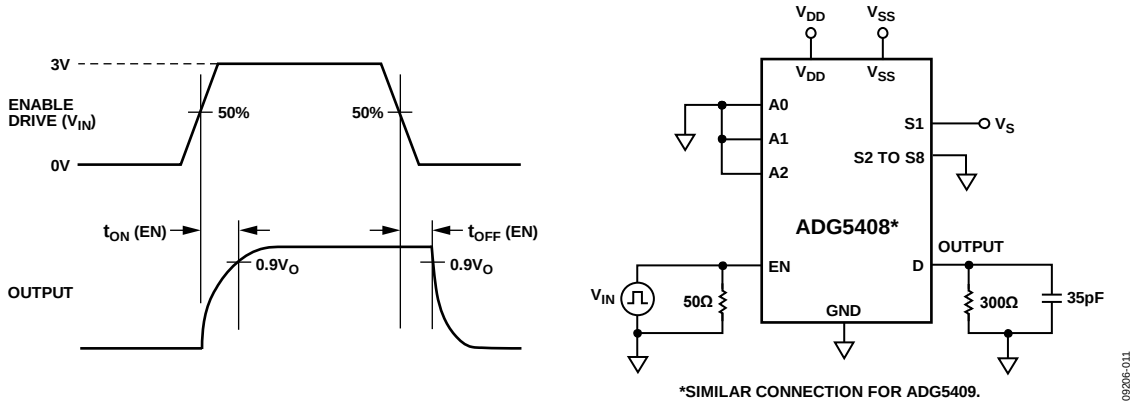

Figure 34. Enable Delay, t_{ON} (EN), t_{OFF} (EN)

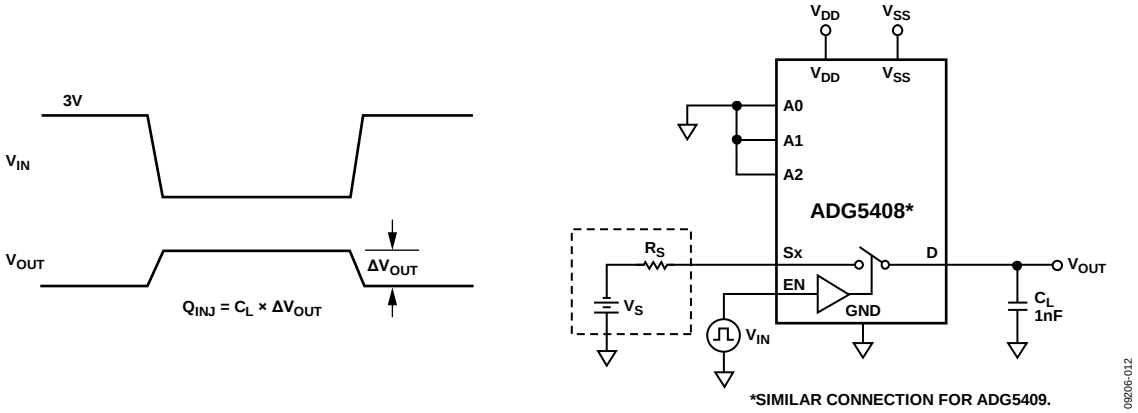

Figure 35. Charge Injection

TERMINOLOGY

I_{DD}
I_{DD} represents the positive supply current.

I_{SS}
I_{SS} represents the negative supply current.

V_D, V_S
V_D and V_S represent the analog voltage on Terminal D and Terminal S, respectively.

R_{ON}
R_{ON} is the ohmic resistance between Terminal D and Terminal S.

ΔR_{ON}
ΔR_{ON} represents the difference between the R_{ON} of any two channels.

$R_{FLAT\ (ON)}$
The difference between the maximum and minimum value of on resistance as measured over the specified analog signal range is represented by $R_{FLAT\ (ON)}$.

I_S (Off)
I_S (Off) is the source leakage current with the switch off.

I_D (Off)
I_D (Off) is the drain leakage current with the switch off.

I_D (On), I_S (On)
I_D (On) and I_S (On) represent the channel leakage currents with the switch on.

V_{INL}
V_{INL} is the maximum input voltage for Logic 0.

V_{INH}
V_{INH} is the minimum input voltage for Logic 1.

I_{INL}, I_{INH}
I_{INL} and I_{INH} represent the low and high input currents of the digital inputs.

C_D (Off)
C_D (Off) represents the off switch drain capacitance, which is measured with reference to ground.

C_S (Off)
C_S (Off) represents the off switch source capacitance, which is measured with reference to ground.

C_D (On), C_S (On)
C_D (On) and C_S (On) represent on switch capacitances, which are measured with reference to ground.

C_{IN}
C_{IN} represents digital input capacitance.

t_{ON} (EN)
t_{ON} (EN) represents the delay time between the 50% and 90% points of the digital input and switch on condition.

t_{OFF} (EN)
t_{OFF} (EN) represents the delay time between the 50% and 90% points of the digital input and switch off condition.

$t_{TRANSITION}$
Delay time between the 50% and 90% points of the digital inputs and the switch on condition when switching from one address state to another.

t_D

t_D represents the off time measured between the 80% point of both switches when switching from one address state to another.

Off Isolation
Off isolation is a measure of unwanted signal coupling through an off channel.

Charge Injection
Charge injection is a measure of the glitch impulse transferred from the digital input to the analog output during switching.

Crosstalk
Crosstalk is a measure of unwanted signal that is coupled through from one channel to another as a result of parasitic capacitance.

Bandwidth
Bandwidth is the frequency at which the output is attenuated by 3 dB.

On Response
On response is the frequency response of the on switch.

Total Harmonic Distortion + Noise (THD + N)
The ratio of the harmonic amplitude plus noise of the signal to the fundamental is represented by THD + N.

AC Power Supply Rejection Ratio (ACPSRR)
ACPSRR is a measure of the ability of a part to avoid coupling noise and spurious signals that appear on the supply voltage pin to the output of the switch. The dc voltage on the device is modulated by a sine wave of 0.62 V p-p. The ratio of the amplitude of signal on the output to the amplitude of the modulation is the ACPSRR.

TRENCH ISOLATION

In the ADG5408/ADG5409, an insulating oxide layer (trench) is placed between the NMOS and the PMOS transistors of each CMOS switch. Parasitic junctions, which occur between the transistors in junction isolated switches, are eliminated, and the result is a completely latch-up proof switch.

In junction isolation, the N and P wells of the PMOS and NMOS transistors form a diode that is reverse-biased under normal operation. However, during overvoltage conditions, this diode can become forward-biased. A silicon controlled rectifier (SCR) type circuit is formed by the two transistors causing a significant amplification of the current that, in turn, leads to latch-up. With trench isolation, this diode is removed, and the result is a latch-up proof switch.

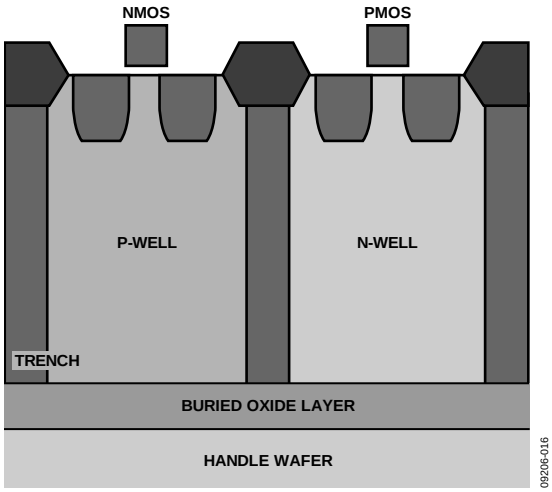

Figure 36. Trench Isolation

APPLICATIONS INFORMATION

The ADG54xx family switches and multiplexers provide a robust solution for instrumentation, industrial, aerospace, and other harsh environments that are prone to latch-up, which is an undesirable high current state that can lead to device failure and persist until the power supply is turned off. The ADG5408/ADG5409 high voltage switches allow single-supply operation from 9 V to 40 V and dual-supply operation from ±9 V to ±22 V. The ADG5408/ADG5409 (as well as select devices within the same family) achieve an 8 kV human body model ESD rating that provides a robust solution eliminating the need for separate protect circuitry designs in some applications.

OUTLINE DIMENSIONS

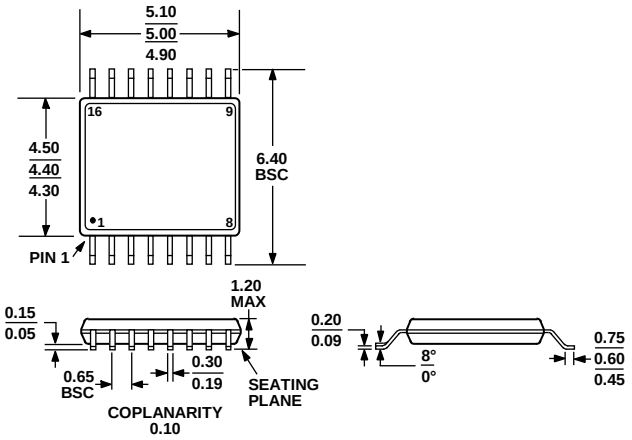

COMPLIANT TO JEDEC STANDARDS MO-153-AB

Figure 37. 16-Lead Thin Shrink Small Outline Package [TSSOP] (RU-16)
Dimensions shown in millimeters

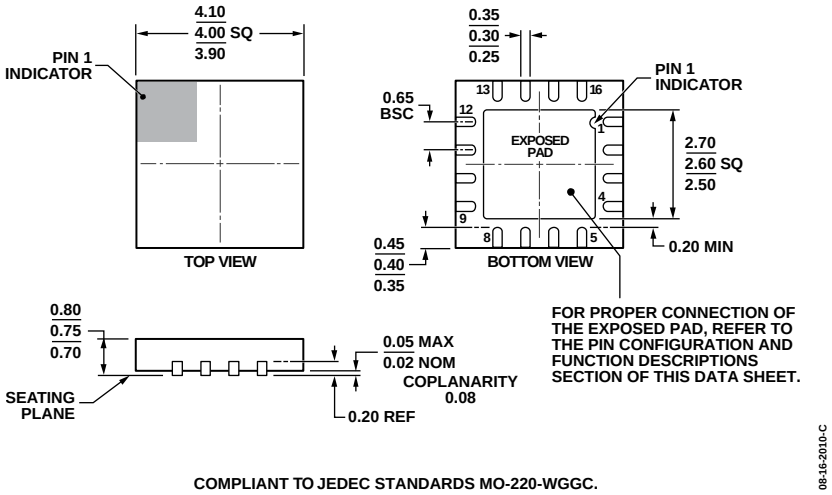

COMPLIANT TO JEDEC STANDARDS MO-220-WGGC.

Figure 38. 16-Lead Lead Frame Chip Scale Package [LFCSP_WQ] 4 mm × 4 mm Body, Very Very Thin Quad (CP-16-17)
Dimensions shown in millimeters

ORDERING GUIDE

Model[1]	Temperature Range	Package Description	Package Option
ADG5408BRUZ	−40°C to +125°C	16-Lead Thin Shrink Small Outline Package [TSSOP]	RU-16
ADG5408BRUZ-REEL7	−40°C to +125°C	16-Lead Thin Shrink Small Outline Package [TSSOP]	RU-16
ADG5408BCPZ-REEL7	−40°C to +125°C	16-Lead Lead Frame Chip Scale Package [LFCSP_WQ]	CP-16-17
ADG5409BRUZ	−40°C to +125°C	16-Lead Thin Shrink Small Outline Package [TSSOP]	RU-16
ADG5409BRUZ-REEL7	−40°C to +125°C	16-Lead Thin Shrink Small Outline Package [TSSOP]	RU-16
ADG5409BCPZ-REEL7	−40°C to +125°C	16-Lead Lead Frame Chip Scale Package [LFCSP_WQ]	CP-16-17

[1] Z = RoHS Compliant Part.

NOTES

NOTES

©2010–2012 Analog Devices, Inc. All rights reserved. Trademarks and registered trademarks are the property of their respective owners.
D09206-0-5/12(B)