One Technology Way • P.O. Box 9106 • Norwood, MA 02062-9106, U.S.A. • Tel: 781.329.4700 • Fax: 781.461.3113 • www.analog.com

Evaluation Board for ADF4360-5 Integrated PLL and VCO Frequency Synthesizer

FEATURES

Self-contained board for generating RF frequencies
Flexibility for reference input, PFD frequency, and loop bandwidth
Accompanying software allows complete control of synthesizer functions from a PC
USB/battery-operated 9 V supplies
Typical phase noise performance of −141 dBc/Hz at 3 MHz offset
Typical spurious performance of −65 dBc at 200 kHz offset (1.3 GHz output)

GENERAL DESCRIPTION

The ADF4360-5EBZ1 evaluation board is designed to allow the user to evaluate the performance of the ADF4360-5 frequency synthesizer consisting of an integrated PLL and VCO (see Figure 1). It contains the ADF4360-5BCPZ, a USB connector, and SMA connectors for the RF outputs. Unpopulated SMA footprints are available for the power supplies, the chip enable (CE), and the external reference input. The evaluation board also contains the loop filter to complete the PLL. It can be modified as necessary for the PLL requirements of the user. A USB cable is included with the board to allow software programmability from a PC.

The package also contains a CD with Windows® software to allow quick, user-friendly programming of the synthesizer. The CD contains additional PLL data sheets, technical notes, articles, and ADIsimPLL™ V3.4 (Analog Devices, Inc., PLL simulation software). More information is available at www.analog.com/pll.

EVALUATION BOARD PHOTOGRAPH



08884-001

Figure 1.

TABLE OF CONTENTS

Features 1
General Description 1
Evaluation Board Photograph 1
Revision History 2
Evaluation Board Hardware 3
RF Output Stages 3
Evaluation Board Software Quick Start Procedures 4
Windows XP OS 4
Windows Vista OS and Windows 7 (32-Bit) OS 5
Windows 7 64-Bit OS 5
Using the Evaluation Board Software 6
Evaluation Board Schematics 8
Ordering Information 11
Bill of Materials 11

REVISION HISTORY

12/11—Rev. 0 to Rev. A

Changes to Features Section, General Description Section, and Figure 1 1
Changes to Evaluation Board Hardware Section 3
Added Evaluation Board Software Quick Start Procedures Section 4
Changes to Using the Evaluation Board Software Section 6
Changes to Evaluation Board Schematics Section 8
Changes to Bill of Materials Section 11

7/10—Revision 0: Initial Version

EVALUATION BOARD HARDWARE

The evaluation board comes with a cable to connect it to the USB port of a PC. The silkscreen and cable diagram for the evaluation board are shown in Figure 2. The board schematics are shown in Figure 9 through Figure 11.

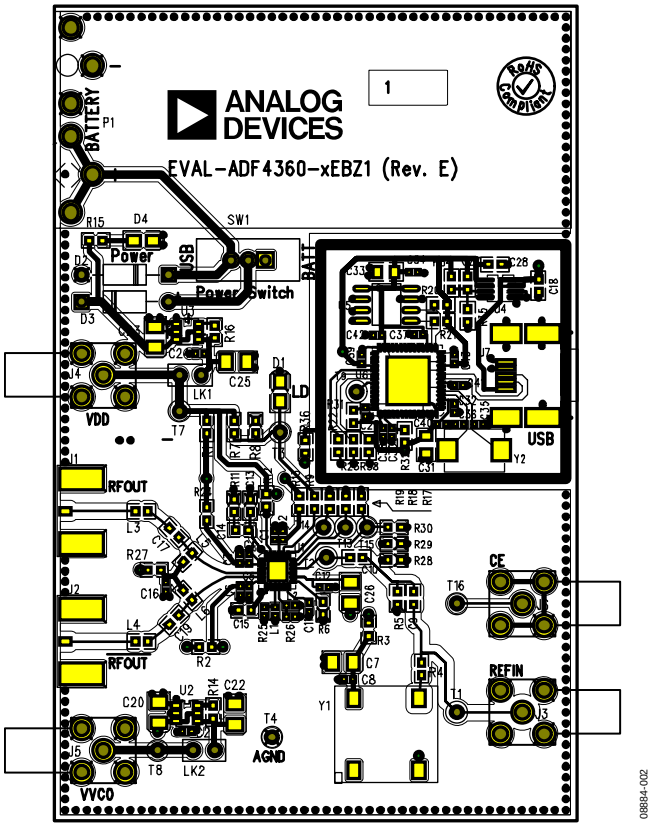

Figure 2. Evaluation Board Silkscreen—Top View

The board is powered from a single 9 V battery, or from the USB supply, by changing the position of Switch SW1. All components necessary for LO generation are catered for on-board. A 10 MHz TCXO from Fox Electronics provides the necessary reference input. Otherwise, an external reference signal can be connected via J3. The TCXO can be disabled by removing the R3 and R4 resistors. The PLL comprises the ADF4360-5BCPZ and a passive loop filter. The VCO output from $RF_{OUT}A$ is available through the standard SMA Connector J1 and the complementary $RF_{OUT}B$ VCO output is available from J2.

Users may provide their own power supplies using the J4 and J5 connectors, as shown in Figure 2. Hardware power-down using the CE pin can be controlled by inserting an SMA connector into J6 and removing R12.

The on-board filter is a third-order, passive, low-pass filter. The filter contains three capacitors (C13, C14, and C15) plus two resistors (R10 and R11). The footprint for R10 is located on the underside of the board. The design parameters for the loop filter are for a center frequency of 1300 MHz, a PFD frequency of 200 kHz, and a low-pass filter bandwidth of 10 kHz. To design a filter for different frequency setups, use the ADIsimPLL simulation software.

RF OUTPUT STAGES

The output stage of the board contains a tuned load for the particular frequency of operation. The particular network inserted in the board is optimized for 1300 MHz operation. This consists of a 5.1 nH shunt inductor, a 10 pF series capacitor, and a 5.1 nH series inductor. If in doubt, use a 50 Ω resistor instead of the shunt inductor, a 100 pF bypass capacitor, and a series 0 Ω resistor. It is important that the same components be placed on the $RF_{OUT}A$ and $RF_{OUT}B$ lines. In addition, it is essential that both outputs be terminated with 50 Ω loads. Otherwise, the output power is not optimum, and in some cases, the part may malfunction.

EVALUATION BOARD SOFTWARE QUICK START PROCEDURES

It is vital to install the software before connecting the board to the PC. The control software and USB drivers for EVAL-ADF4360-5EBZ1 accompany the EVAL-ADF4360-5EBZ1 on a CD. To install the software, use the following steps:

1. Open **ADF4360_setup.msi**.
2. The install wizard guides you through the installation process. The software is installed in a default directory called **C:/Program Files/Analog Devices/ADF4360**.

The software requires Microsoft's .NET Framework Version 3.5 or later to be installed on your machine. The installer automatically downloads the framework from the Microsoft website if you do not have this installed. If you do not have an Internet connection or have a slow connection on the PC, you can install the .NET Framework directly from the CD. Do this by double-clicking **dotnetfx.exe**. Once installed, run **ADF4360_Setup.msi** again.

WINDOWS XP OS

After you have installed the software, install the USB drivers. To do so, use the following steps:

1. Plug a USB cable into the USB connector on the evaluation board. The **Found New Hardware** box opens. See Figure 3.
2. Choose **Install from a list or specified location (Advanced)**.



Figure 3. New Hardware Wizard

3. Click **Continue Anyway** when asked about Windows Logo testing.

If the installation is successful, the message in Figure 4 appears.



Figure 4. Successful Installation

WINDOWS VISTA OS AND WINDOWS 7 (32-BIT) OS

For Windows Vista or Windows 7 (32-bit), if the device drivers do not install automatically, you will have to manually install the drivers. To do so, use the following steps:

1. Find the new unknown device (the evaluation board) in **Device Manager** and double-click it to open the properties. The device should be **Unknown device**, under **Other devices** (see Figure 5).

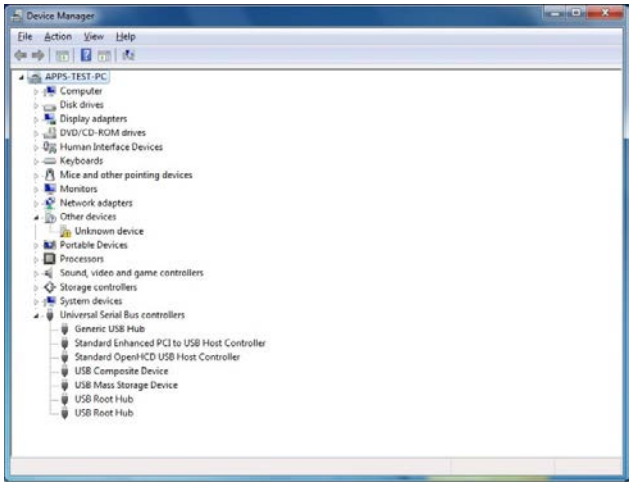

Figure 5. Device Manager

2. Click **Update Driver** in the properties window (see Figure 6).

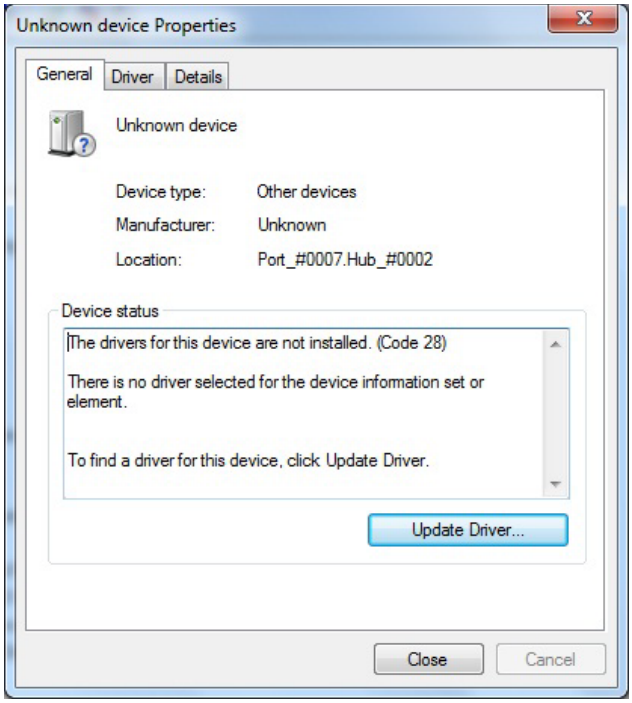

Figure 6. Unknown Device Properties

3. On the **Update Driver Software** dialog box, choose **Browse my computer for driver software**.
4. Browse to **C:\Program Files\Analog Devices\ADF4360**.
5. Click **OK** or **Next**.
6. If prompted by Windows security, choose **Install this driver software anyway.**
7. If the installation is successful, the message in Figure 7 appears.

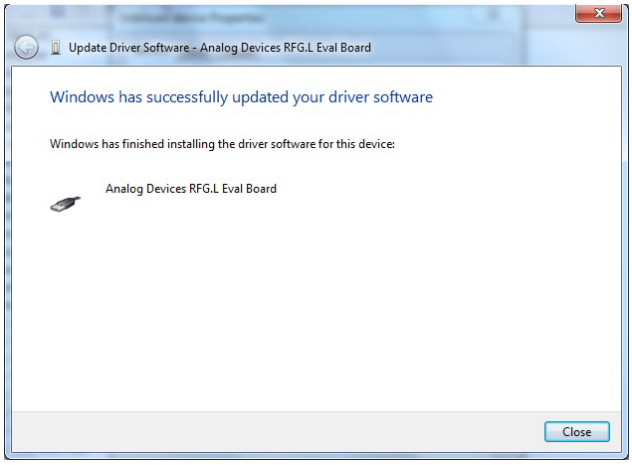

Figure 7. Successful Installation

WINDOWS 7 64-BIT OS

The Windows 7 64-bit system uses a different driver than 32-bit system. To install this driver:

1. Disconnect the USB evaluation board.
2. Open **ADF4360_setup.msi**.
3. The install wizard guides you through the installation process. The software is installed in a default directory called **C:/Program Files/Analog Devices/ADF4360**.
4. Connect your USB evaluation board. The driver should be found automatically.

Note that installing this driver package disables older versions of Analog Devices PLL software; therefore, only install if needed.

USING THE EVALUATION BOARD SOFTWARE

The control software for the EVAL-ADF4360-xEBZ1 accompanies the EVAL-ADF4360-xEBZ1 on a CD. To install the software, see the Evaluation Board Software Quick Start Procedures section.

To run the software, click the **ADF4360.exe** file on the desktop or in the **Start** menu.

The main interface window appears (see Figure 8). Confirm that **Analog Devices RFG.L Eval Board connected** is displayed at the top of the window. Otherwise, the software has no connection to the evaluation board.

The evaluation board can be connected and disconnected while the software is running. Note that when connecting the board, it takes about 5 seconds for the status label to change.

Under the **File** menu, the current settings can be saved to, and loaded from, a text file.

Use the **REF IN Frequency** text box to set the correct reference frequency and the reference frequency divider. The reference TCXO on the evaluation board runs at 10 MHz.

The **Settings** section controls the charge pump current setting, the output power setting, and the multiplexer output setting.

Use the **Frequency Settings** section to control the output frequency. The user can input the desired output frequency to the **RF Output Frequency** text box (in megahertz).

In the **Registers** tab, the user can manually input the desired value to be written to the registers.

In the **Sweep and hop** tab, the user can make the device sweep a range of frequencies, or hop between two set frequencies.

In the **Latches to write** section, at the bottom of the window, the values to be written to each register are displayed. If the background on the text box is green, then the value displayed is different to the value actually on the device. Click **Write x Latch** to write that value to the device.

The **F2**, **F3**, and **F4** keys switch between the three tabs. **F12** increases the output frequency by one channel spacing and writes it to the device. **F11** decreases the output frequency by one channel spacing.

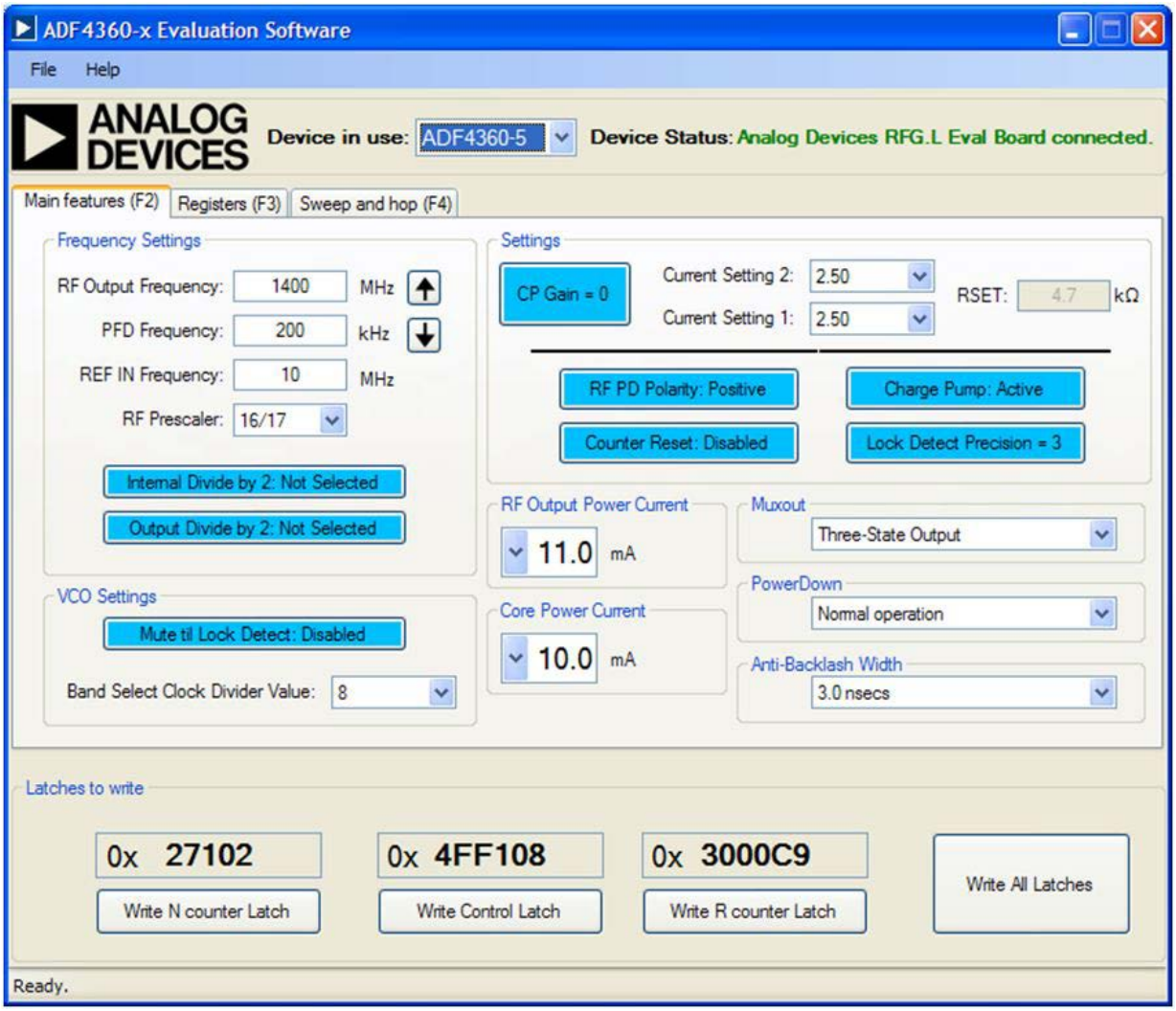

Figure 8. Software Front Panel Display

EVALUATION BOARD SCHEMATICS

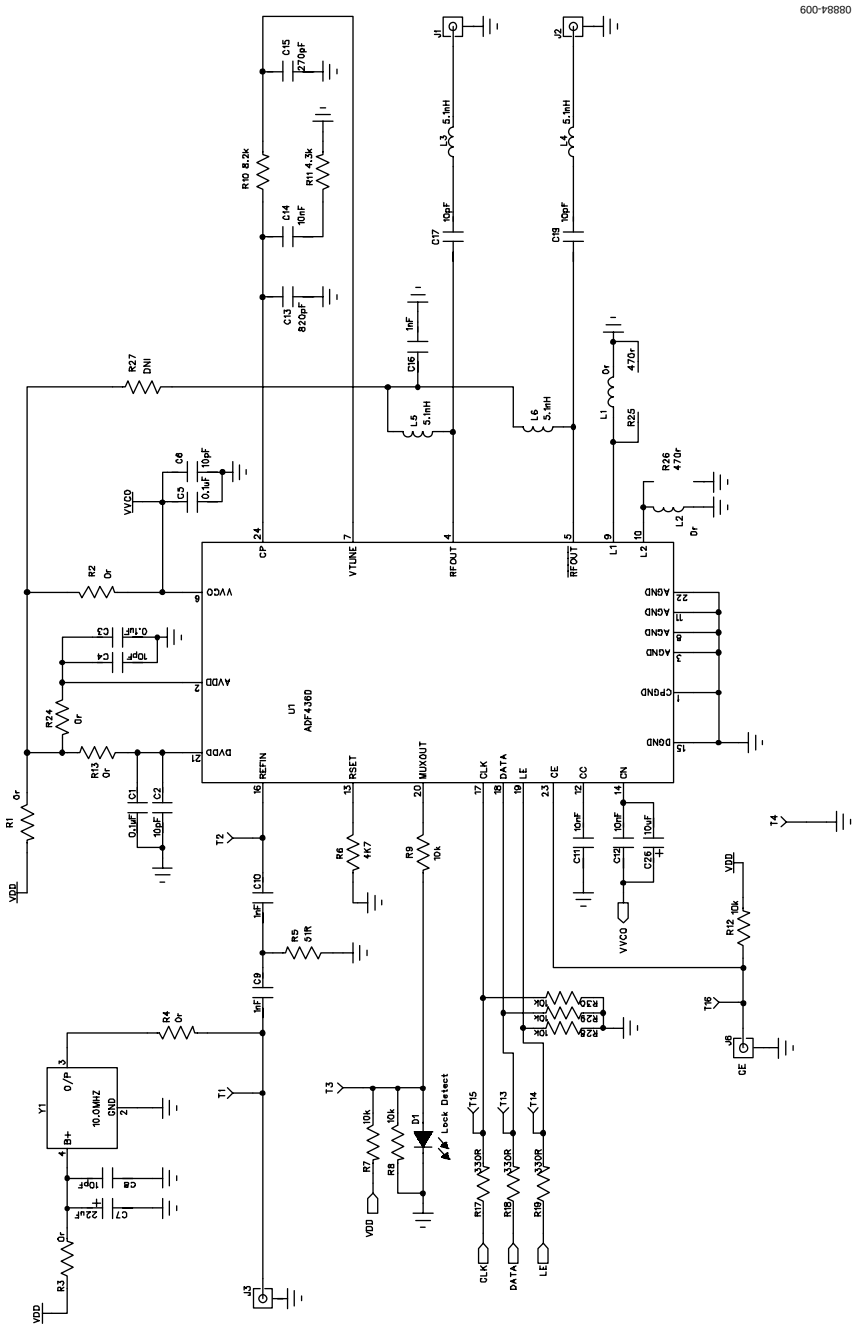

Figure 9. EVAL-ADF4360-5EBZ1 Schematic

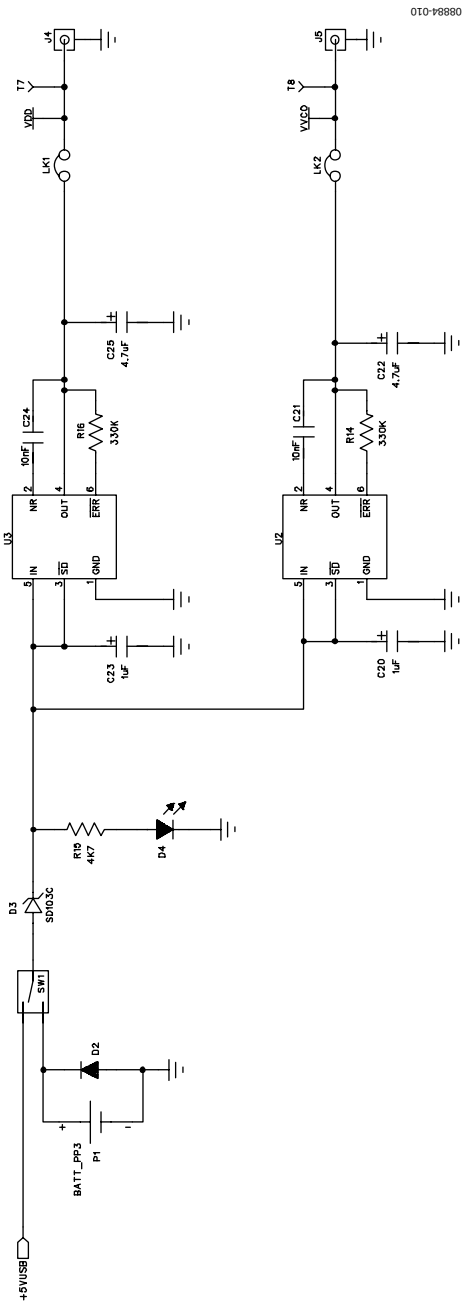

Figure 10. EVAL-ADF4360-5EBZ1 Schematic (Continued)

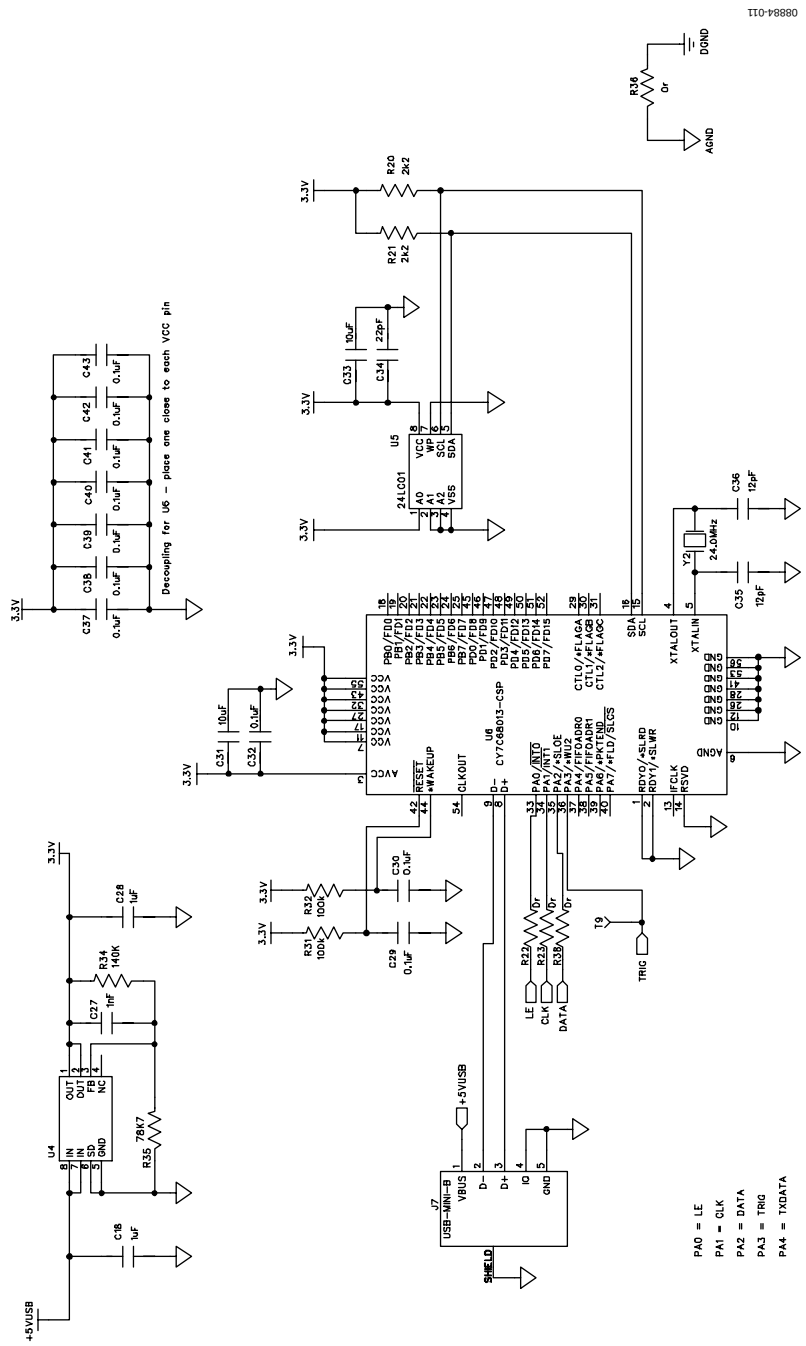

Figure 11. EVAL-ADF4360-5EBZ1 Schematic (Continued)

ORDERING INFORMATION

BILL OF MATERIALS

Table 1.

Reference Designator	Part Description	Manufacturer/Part No.
C1, C3, C5, C29, C30, C32, C37, C38, C39, C40, C41, C42, C43	Capacitor, 0402, 0.1 µF, 16 V	Kemet C0402C104K4RAC
C2, C4, C6, C8	Capacitor, 0402, 10 pF, 50 V	Kemet C0402C100J5GACTU
C7	Capacitor, Case A, 22 µF, 6.3 V	AVX TAJA226K006R
C9, C10, C27	Capacitor, 0603, 1 nF, 50 V	AVX 06035A102JAT2A
C11, C12, C21, C24	Capacitor, 0402, 10 nF, 16 V	Yageo (Phycomp) CC0402ZRY5V7BB103
C13	Capacitor, loop filter, 0603, 820 pF, 50 V	Phycomp 2238 861 15821
C14	Capacitor, loop filter, 0603, 10 nF, 50 V	AVX 08055C103KAT2A
C15	Capacitor, loop filter, 0603, 270 pF, 50 V	Phycomp 2238 861 15271
C16	Multilayer ceramic capacitor, 50 V, X7R, 1 nF, ±10%, 0402	Murata GRM155R71H102KA01D
C17, C19	Capacitor, 0603, 10 pF, 50 V	AVX 06035A100JAT2A
C18, C28	Capacitor, 0603, 1 µF, 25 V	Taiyo Yuden TMK107BJ105KA-T
C20, C23	Capacitor, Case A, 1 µF, 16 V	AVX TAJA105K016R
C22, C25	Capacitor, Case A, 4.7 µF, 10 V	AVX TPSA475K010R1400
C26	Capacitor, Case A, 10 µF, 6.3 V	Kemet T491A106M016AT
C31, C33	Capacitor, 0805, 10 µF, 6.3 V	Murata GRM21BR71A106KE51L
C34	Capacitor, 0402, 22 pF, 50 V NPO	Kemet C0402C220J5GACTU
C35, C36	Capacitor, 0402, 12 pF, 50 V	Kemet C0402C120J5GACTU
D1	LED, SMD red	Avago HSMS-C170
D2	Diode, 1 A, 50 V	Multicomp 1N4001
D3	Schottky diode, 20 V	Micro Commercial Components, Inc., SD103C-TP
D4	LED, SMD red	Avago HSMS-C170
J1, J2	Jack SMA end launch tab	Johnson Components 142-0701-851
J3 to J6	Jack SMA end launch tab	Not inserted
J7	USB mini-B	Molex 56579-0576
L1, L2	Ceramic chip inductor	Not inserted
L3, L4, L5, L6	Ceramic chip inductor, 5.1 nH, 5%, 0603	Coilcraft 0603CS-5N1X_LU
LK1, LK2	Header, 1-row, 2-way and jumper socket black	Harwin Plc M20-9990245 and Harwin Plc M7567-05
P1	Battery clip, PCB mounting	Keystone Electronics Corp. 593+594
R1 to R4, R13, R22 to R24, R27, R36, R38	Resistor, 0603, 0 Ω	Multicomp MC 0.063W 0603 0R
R5	Resistor, 0603, 51 Ω	Multicomp MC 0.063W 0603 1% 51R
R6, R15	Resistor, 0603, 4.7 kΩ	Multicomp MC 0.063W 0603 1% 4K7
R7, R8, R12, R28, R29, R30	Resistor, 0603, 10 kΩ	Multicomp MC 0.063W 0603 1% 10K
R9	Resistor, 0603, 100 Ω	Multicomp MC 0.063W 0603 1% 100R
R10	Resistor, loop filter, 0805, 8.2 kΩ	Multicomp MC 0.1W 0805 1% 8K2
R11	Resistor, loop filter, 0805, 4.3 kΩ	Multicomp MC 0.1W 0805 1% 4K3
R14, R16	Resistor, 0603, 330 kΩ	Multicomp MC 0.063W 0603 1% 330K
R17 to R19	Resistor, 0603, 330 Ω	Multicomp MC 0.063W 0603 1% 330R
R20, R21	Resistor, 0603, 2.2 kΩ	Multicomp MC 0.063W 0603 1% 2K2
R25, R26	Resistor, 0603, 470 Ω	Multicomp MC 0.063W 0603 1% 470R
R31, R32	Resistor, 0603, 100 kΩ	Multicomp MC 0.063W 0603 1% 100K
R34	Resistor, 0603, 140 kΩ	Multicomp MC 0.063W 0603 1% 140K
R35	Resistor, 0603, 78.7 kΩ	Multicomp MC 0.063W 0603 1% 78K7
SW1	Switch, PCB SPDT	APEM TL36P0050
T1 to T8, T13 to T16	Terminal, PCB, red, PK100	Vero Technologies, Ltd. 20-313137
T9 to T12	Test point	Not inserted

Reference Designator	Part Description	Manufacturer/Part No.
U1	Integrated integer-N synthesizer	Analog Devices, ADF4360-5BCPZ
U2	High accuracy low dropout linear 5 V regulator	Analog Devices, ADP3300ARTZ-3
U3	High accuracy low dropout linear 3 V regulator	Analog Devices, ADP3300ARTZ-3
U4	ADP3334 adjustable LDO regulator	Analog Devices, ADP3334ARMZ
U5	IC Serial EEPROM 8-SOIC	Microchip 24LC64-ISN
U6	USB Microcontroller	Cypress CY7C68013A-56LFXC
Y1	10 MHz TCXO (FOX801)	Fox Electronics FOX801-BELF



ESD Caution

ESD (electrostatic discharge) sensitive device. Charged devices and circuit boards can discharge without detection. Although this product features patented or proprietary protection circuitry, damage may occur on devices subjected to high energy ESD. Therefore, proper ESD precautions should be taken to avoid performance degradation or loss of functionality.

Legal Terms and Conditions

By using the evaluation board discussed herein (together with any tools, components documentation or support materials, the "Evaluation Board"), you are agreeing to be bound by the terms and conditions set forth below ("Agreement") unless you have purchased the Evaluation Board, in which case the Analog Devices Standard Terms and Conditions of Sale shall govern. Do not use the Evaluation Board until you have read and agreed to the Agreement. Your use of the Evaluation Board shall signify your acceptance of the Agreement. This Agreement is made by and between you ("Customer") and Analog Devices, Inc. ("ADI"), with its principal place of business at One Technology Way, Norwood, MA 02062, USA. Subject to the terms and conditions of the Agreement, ADI hereby grants to Customer a free, limited, personal, temporary, non-exclusive, non-sublicensable, non-transferable license to use the Evaluation Board FOR EVALUATION PURPOSES ONLY. Customer understands and agrees that the Evaluation Board is provided for the sole and exclusive purpose referenced above, and agrees not to use the Evaluation Board for any other purpose. Furthermore, the license granted is expressly made subject to the following additional limitations: Customer shall not (i) rent, lease, display, sell, transfer, assign, sublicense, or distribute the Evaluation Board; and (ii) permit any Third Party to access the Evaluation Board. As used herein, the term "Third Party" includes any entity other than ADI, Customer, their employees, affiliates and in-house consultants. The Evaluation Board is NOT sold to Customer; all rights not expressly granted herein, including ownership of the Evaluation Board, are reserved by ADI. CONFIDENTIALITY. This Agreement and the Evaluation Board shall all be considered the confidential and proprietary information of ADI. Customer may not disclose or transfer any portion of the Evaluation Board to any other party for any reason. Upon discontinuation of use of the Evaluation Board or termination of this Agreement, Customer agrees to promptly return the Evaluation Board to ADI. ADDITIONAL RESTRICTIONS. Customer may not disassemble, decompile or reverse engineer chips on the Evaluation Board. Customer shall inform ADI of any occurred damages or any modifications or alterations it makes to the Evaluation Board, including but not limited to soldering or any other activity that affects the material content of the Evaluation Board. Modifications to the Evaluation Board must comply with applicable law, including but not limited to the RoHS Directive. TERMINATION. ADI may terminate this Agreement at any time upon giving written notice to Customer. Customer agrees to return to ADI the Evaluation Board at that time. LIMITATION OF LIABILITY. THE EVALUATION BOARD PROVIDED HEREUNDER IS PROVIDED "AS IS" AND ADI MAKES NO WARRANTIES OR REPRESENTATIONS OF ANY KIND WITH RESPECT TO IT. ADI SPECIFICALLY DISCLAIMS ANY REPRESENTATIONS, ENDORSEMENTS, GUARANTEES, OR WARRANTIES, EXPRESS OR IMPLIED, RELATED TO THE EVALUATION BOARD INCLUDING, BUT NOT LIMITED TO, THE IMPLIED WARRANTY OF MERCHANTABILITY, TITLE, FITNESS FOR A PARTICULAR PURPOSE OR NONINFRINGEMENT OF INTELLECTUAL PROPERTY RIGHTS. IN NO EVENT WILL ADI AND ITS LICENSORS BE LIABLE FOR ANY INCIDENTAL, SPECIAL, INDIRECT, OR CONSEQUENTIAL DAMAGES RESULTING FROM CUSTOMER'S POSSESSION OR USE OF THE EVALUATION BOARD, INCLUDING BUT NOT LIMITED TO LOST PROFITS, DELAY COSTS, LABOR COSTS OR LOSS OF GOODWILL. ADI'S TOTAL LIABILITY FROM ANY AND ALL CAUSES SHALL BE LIMITED TO THE AMOUNT OF ONE HUNDRED US DOLLARS ($100.00). EXPORT. Customer agrees that it will not directly or indirectly export the Evaluation Board to another country, and that it will comply with all applicable United States federal laws and regulations relating to exports. GOVERNING LAW. This Agreement shall be governed by and construed in accordance with the substantive laws of the Commonwealth of Massachusetts (excluding conflict of law rules). Any legal action regarding this Agreement will be heard in the state or federal courts having jurisdiction in Suffolk County, Massachusetts, and Customer hereby submits to the personal jurisdiction and venue of such courts. The United Nations Convention on Contracts for the International Sale of Goods shall not apply to this Agreement and is expressly disclaimed.

©2010–2011 Analog Devices, Inc. All rights reserved. Trademarks and registered trademarks are the property of their respective owners.

UG08884-0-12/11(A)



www.analog.com