Direct Modulation/Fast Waveform Generating, 13.5 GHz, Fractional-N Frequency Synthesizer

Data Sheet **ADF4169**

FEATURES

- RF bandwidth to 13.5 GHz
- High and low speed FMCW ramp generation
- 25-bit fixed modulus allows subhertz frequency resolution
- PFD frequencies up to 130 MHz
- Normalized phase noise floor of −224 dBc/Hz
- FSK and PSK functions
- Sawtooth and triangular waveform generation
- Ramp superimposed with FSK
- Ramp with 2 different sweep rates
- Ramp delay, frequency readback, and interrupt functions
- Programmable phase control
- 2.7 V to 3.45 V analog power supply
- 1.8 V to 2 V digital power supply
- Programmable charge pump currents
- 3-wire serial interface
- Digital lock detect
- ESD performance: 3000 V HBM, 1000 V CDM
- Qualified for automotive applications

APPLICATIONS

- FMCW radars
- Communications test equipment
- Communications infrastructure

GENERAL DESCRIPTION

The ADF4169 is a 13.5 GHz, fractional-N frequency synthesizer with modulation and both fast and slow waveform generation capability. The device uses a 25-bit fixed modulus, allowing subhertz frequency resolution.

The ADF4169 consists of a low noise digital phase frequency detector (PFD), a precision charge pump, and a programmable reference divider. The Σ-Δ-based fractional interpolator allows programmable fractional-N division. The INT and FRAC registers define an overall N divider as N = INT + (FRAC/2^{25}).

The ADF4169 can be used to implement frequency shift keying (FSK) and phase shift keying (PSK) modulation. Frequency sweep modes are also available to generate various waveforms in the frequency domain, for example, sawtooth waveforms and triangular waveforms. Sweeps can be set to run automatically or with each step manually triggered by an external pulse. The ADF4169 features cycle slip reduction (CSR) circuitry, which enables faster lock times without the need for modifications to the loop filter.

Control of all on-chip registers is via a simple 3-wire interface. The ADF4169 operates with an analog power supply in the range of 2.7 V to 3.45 V and a digital power supply in the range of 1.8 V to 2 V. The device can be powered down when not in use.

FUNCTIONAL BLOCK DIAGRAM

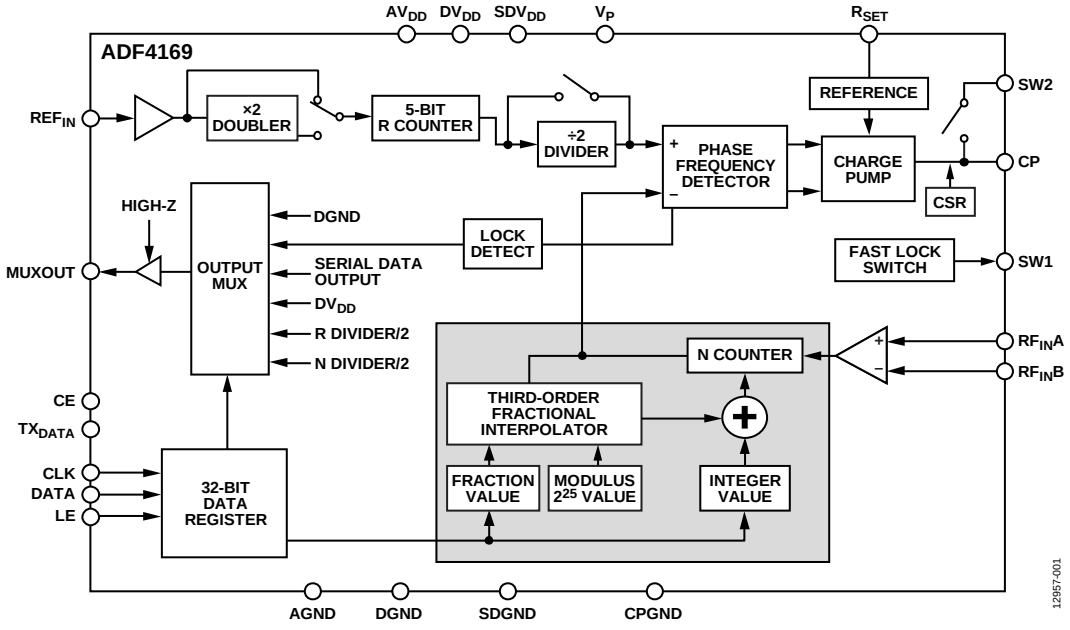

Figure 1.

Rev. 0 Document Feedback

Information furnished by Analog Devices is believed to be accurate and reliable. However, no responsibility is assumed by Analog Devices for its use, nor for any infringements of patents or other rights of third parties that may result from its use. Specifications subject to change without notice. No license is granted by implication or otherwise under any patent or patent rights of Analog Devices. Trademarks and registered trademarks are the property of their respective owners.

One Technology Way, P.O. Box 9106, Norwood, MA 02062-9106, U.S.A.
Tel: 781.329.4700 ©2015 Analog Devices, Inc. All rights reserved.
Technical Support www.analog.com

TABLE OF CONTENTS

Features ... 1
Applications ... 1
General Description ... 1
Functional Block Diagram ... 1
Revision History ... 2
Specifications ... 3
  Timing Specifications ... 4
Absolute Maximum Ratings ... 6
  Thermal Resistance ... 6
  ESD Caution ... 6
Pin Configuration and Function Descriptions ... 7
Typical Performance Characteristics ... 8
Theory of Operation ... 10
  Reference Input Section ... 10
  RF Input Stage ... 10
  RF INT Divider ... 10
  25-Bit Fixed Modulus ... 10
  INT, FRAC, and R Counter Relationship ... 10
  R Counter ... 10
  Phase Frequency Detector and Charge Pump ... 11
  MUXOUT and Lock Detect ... 11
  Input Shift Register ... 11
  Program Modes ... 11
Register Maps ... 12
  FRAC/INT Register (R0) Map ... 14
  LSB FRAC Register (R1) Map ... 15
  R Divider Register (R2) Map ... 16
  Function Register (R3) Map ... 18
  Clock Register (R4) Map ... 20
  Deviation Register (R5) Map ... 22
  Step Register (R6) Map ... 23
  Delay Register (R7) Map ... 24
Applications Information ... 25
  Initialization Sequence ... 25
  RF Synthesizer Worked Example ... 25
  Reference Doubler ... 25
  Cycle Slip Reduction for Faster Lock Times ... 25
  Modulation ... 26
  Waveform Generation ... 26
  Waveform Deviations and Timing ... 27
  Single Ramp Burst ... 27
  Single Triangular Burst ... 27
  Single Sawtooth Burst ... 27
  Continuous Sawtooth Ramp ... 27
  Continuous Triangular Ramp ... 27
  FMCW Radar Ramp Settings Worked Example ... 27
  Activating the Ramp ... 28
  Other Waveforms ... 28
  Ramp Complete Signal to MUXOUT ... 31
  External Control of Ramp Steps ... 31
  Interrupt Modes and Frequency Readback ... 31
  Fast Lock Mode ... 33
  Spur Mechanisms ... 33
  Filter Design Using ADIsimPLL ... 34
  PCB Design Guidelines for the Chip Scale Package ... 34
  Application of the ADF4169 in FMCW Radar ... 35
Outline Dimensions ... 36
  Ordering Guide ... 36
  Automotive Products ... 36

REVISION HISTORY

7/15—Revision 0: Initial Version

SPECIFICATIONS

AV_{DD} = V_P = 2.7 V to 3.45 V, DV_{DD} = SDV_{DD} = 1.9 V, AGND = DGND = SDGND = CPGND = 0 V, f_{PFD} = 130 MHz, T_A = T_{MIN} to T_{MAX}, dBm referred to 50 Ω, unless otherwise noted.

Table 1.

Parameter[1]	Min	Typ	Max	Unit	Test Conditions/Comments
RF CHARACTERISTICS					
RF Input Frequency, RF_{IN}	0.5		13.5	GHz	−10 dBm minimum to 0 dBm maximum; for lower frequencies, ensure a slew rate ≥ 400 V/µs
Prescaler Output Frequency			2	GHz	For higher frequencies, use 8/9 prescaler
REFERENCE CHARACTERISTICS					
REF_{IN} Input Frequency	10		260	MHz	−5 dBm minimum to +9 dBm maximum biased at 1.9/2 (ac coupling ensures 1.9/2 bias); for frequencies < 10 MHz, use a dc-coupled, CMOS-compatible square wave with a slew rate > 25 V/µs
Reference Doubler Enabled	10		50	MHz	Bit DB20 in Register R2 set to 1
REF_{IN} Input Capacitance			1.2	pF	
REF_{IN} Input Current			±100	µA	
PHASE FREQUENCY DETECTOR, PFD					
Phase Detector Frequency, f_{PFD}[2]			130	MHz	
CHARGE PUMP (CP)					
I_{CP} Sink/Source Current					Programmable
High Value		4.8		mA	R_{SET} = 5.1 kΩ
Low Value		300		µA	
Absolute Accuracy		2.5		%	R_{SET} = 5.1 kΩ
R_{SET} Range	4.59	5.1	5.61	kΩ	
I_{CP} Three-State Leakage Current		1		nA	Sink and source current
Sink and Source Matching		2		%	0.5 V < V_{CP} < V_P − 0.5 V
I_{CP} vs. V_{CP}		2		%	0.5 V < V_{CP} < V_P − 0.5 V
I_{CP} vs. Temperature		2		%	V_{CP} = V_P/2
LOGIC INPUTS					
Input Voltage High, V_{INH}	1.17			V	
Input Voltage Low, V_{INL}			0.4	V	
Input Current, I_{INH}/I_{INL}			±1	µA	
Input Capacitance, C_{IN}			10	pF	
LOGIC OUTPUTS					
Output Voltage High, V_{OH}	DV_{DD} − 0.4			V	CMOS output selected
Output Voltage Low, V_{OL}			0.3	V	I_{OL} = 500 µA
Output High Current, I_{OH}			100	µA	
POWER SUPPLIES					
AV_{DD}	2.7		3.45	V	
DV_{DD}, SDV_{DD}	1.8		2	V	
V_P	2.7		3.45	V	
AI_{DD}		26	40	mA	Supply current drawn by AV_{DD}; f_{PFD} = 130 MHz
DI_{DD}		7.5	12	mA	Supply current drawn by DV_{DD}; f_{PFD} = 130 MHz
I_P		5.5	7	mA	Supply current drawn by V_P; f_{PFD} = 130 MHz
Power-Down Mode		2		µA	

Parameter[1]	Min	Typ	Max	Unit	Test Conditions/Comments
NOISE CHARACTERISTICS					
Normalized Phase Noise Floor[3]					Phase-locked loop (PLL) bandwidth (BW) = 1 MHz
Integer-N Mode		−224		dBc/Hz	FRAC = 0; see Σ-Δ Modulator Mode section
Fractional-N Mode		−217		dBc/Hz	
Normalized 1/f Noise (PN_{1_f})[4]		−120		dBc/Hz	Measured at 10 kHz offset, normalized to 1 GHz
Phase Noise Performance[5]					At the voltage controlled oscillator (VCO) output
12,002 MHz Output[6]		−96		dBc/Hz	At 50 kHz offset, 100 MHz PFD frequency

[1] Operating temperature: −40°C to +125°C.
[2] Guaranteed by design. Sample tested to ensure compliance.
[3] This specification can be used to calculate phase noise for any application. Use the formula ((Normalized Phase Noise Floor) + 10 log(f_{PFD}) + 20 logN) to calculate in-band phase noise performance as seen at the VCO output.
[4] The PLL phase noise is composed of flicker (1/f) noise plus the normalized PLL noise floor. The formula for calculating the 1/f noise contribution at an RF frequency (f_{RF}) and at an offset frequency (f) is given by PN = PN_{1_f} + 10 log(10 kHz/f) + 20 log(f_{RF}/1 GHz). Both the normalized phase noise floor and flicker noise are modeled in ADIsimPLL™.
[5] The phase noise performance is measured with a modified EV-ADF4159EB3Z evaluation board and the Rohde & Schwarz® FSUP signal source analyzer.
[6] f_{REFIN} = 100 MHz, f_{PFD} = 100 MHz, offset frequency = 50 kHz, RF_{OUT} = 12,002 MHz, N = 120.02, and loop bandwidth = 250 kHz.

TIMING SPECIFICATIONS

AV_{DD} = V_P = 2.7 V to 3.45 V, DV_{DD} = SDV_{DD} = 1.9 V, AGND = DGND = SDGND = CPGND = 0 V, T_A = T_{MIN} to T_{MAX}, dBm referred to 50 Ω, unless otherwise noted.

Table 2. Write Timing

Parameter	Limit at T_{MIN} to T_{MAX}	Unit	Description
t_1	20	ns min	LE setup time
t_2	10	ns min	DATA to CLK setup time
t_3	10	ns min	DATA to CLK hold time
t_4	25	ns min	CLK high duration
t_5	25	ns min	CLK low duration
t_6	10	ns min	CLK to LE setup time
t_7	20	ns min	LE pulse width

Write Timing Diagram

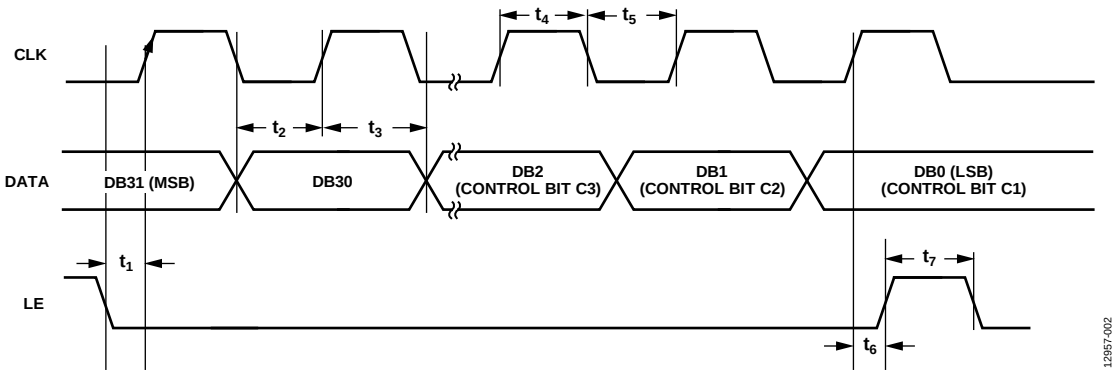

Figure 2. Write Timing Diagram

Table 3. Read Timing

Parameter	Limit at T_{MIN} to T_{MAX}	Unit	Description
t_1 [1]	t_{PFD} + 20	ns min	TX_{DATA} setup time
t_2	20	ns min	CLK setup time to data (on MUXOUT)
t_3	25	ns min	CLK high duration
t_4	25	ns min	CLK low duration
t_5	10	ns min	CLK to LE setup time

[1] t_{PFD} is the period of the PFD frequency; for example, if the PFD frequency is 50 MHz, t_{PFD} = 20 ns.

Read Timing Diagram

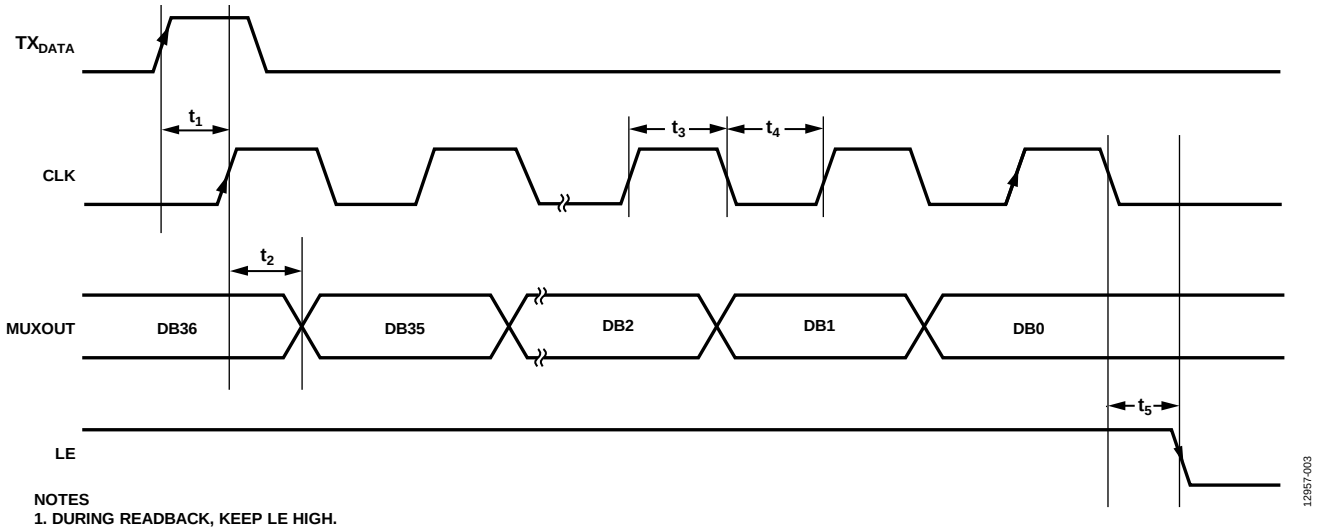

Figure 3. Read Timing Diagram

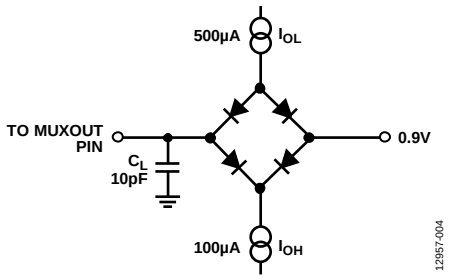

Figure 4. Load Circuit for MUXOUT Timing, C_L = 10 pF

ABSOLUTE MAXIMUM RATINGS

T_A = 25°C, GND = AGND = DGND = SDGND = CPGND = 0 V, unless otherwise noted.

Table 4.

Parameter	Rating
AV_{DD} to GND	−0.3 V to +3.9 V
DV_{DD} to GND	−0.3 V to +2.4 V
V_P to GND	−0.3 V to +3.9 V
V_P to AV_{DD}	−0.3 V to +0.3 V
Digital Input/Output Voltage to GND	−0.3 V to DV_{DD} + 0.3 V
Analog Input/Output Voltage to GND	−0.3 V to AV_{DD} + 0.3 V
REF_{IN} to GND	−0.3 V to DV_{DD} + 0.3 V
RF_{IN} to GND	−0.3 V to AV_{DD} + 0.3 V
Operating Temperature Range, Industrial	−40°C to +125°C
Storage Temperature Range	−65°C to +125°C
Maximum Junction Temperature	150°C
Reflow Soldering	
Peak Temperature	260°C
Time at Peak Temperature	40 sec
ESD	
Charged Device Model (CDM)	1000 V
Human Body Model (HBM)	3000 V

Stresses at or above those listed under Absolute Maximum Ratings may cause permanent damage to the product. This is a stress rating only; functional operation of the product at these or any other conditions above those indicated in the operational section of this specification is not implied. Operation beyond the maximum operating conditions for extended periods may affect product reliability.

THERMAL RESISTANCE

Thermal impedance (θ_{JA}) is specified for a device with the exposed pad soldered to AGND.

Table 5. Thermal Resistance

Package Type	θ_{JA}	Unit
24-Lead LFCSP_WQ	30.4	°C/W

ESD CAUTION



ESD (electrostatic discharge) sensitive device. Charged devices and circuit boards can discharge without detection. Although this product features patented or proprietary protection circuitry, damage may occur on devices subjected to high energy ESD. Therefore, proper ESD precautions should be taken to avoid performance degradation or loss of functionality.

PIN CONFIGURATION AND FUNCTION DESCRIPTIONS

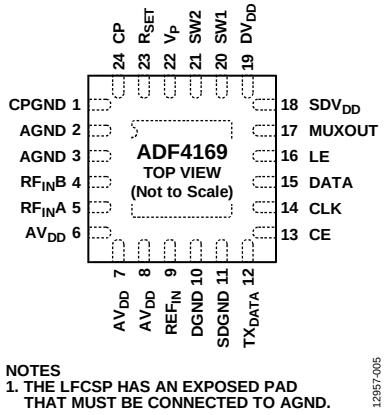

Figure 5. Pin Configuration

Table 6. Pin Function Descriptions

Pin No.	Mnemonic	Description
1	CPGND	Charge Pump Ground. This pin is the ground return path for the charge pump.
2, 3	AGND	Analog Ground.
4	$RF_{IN}B$	Complementary Input to the RF Prescaler. Decouple this pin to the ground plane with a small bypass capacitor, typically 100 pF.
5	$RF_{IN}A$	Input to the RF Prescaler. This small signal input is normally ac-coupled from the VCO.
6, 7, 8	AV_{DD}	Positive Power Supplies for the RF Section. Place decoupling capacitors to the ground plane as close as possible to these pins.
9	REF_{IN}	Reference Input. This CMOS input has a nominal threshold of $DV_{DD}/2$ and an equivalent input resistance of 100 kΩ. It can be driven from a TTL or CMOS crystal oscillator, or it can be ac-coupled.
10	DGND	Digital Ground.
11	SDGND	Digital Σ-Δ Modulator Ground. This pin is the ground return path for the Σ-Δ modulator.
12	TX_{DATA}	Transmit Data Pin. This pin provides the transmitted data in FSK or PSK mode and also controls some ramping functionality.
13	CE	Chip Enable (1.9 V Logic). A logic low on this pin powers down the device and places the charge pump output into three-state mode.
14	CLK	Serial Clock Input. This input is used to clock in the serial data to the registers. The data is latched into the input shift register on the CLK rising edge. This input is a high impedance CMOS input.
15	DATA	Serial Data Input. The serial data is loaded most significant bit (MSB) first; the three least significant bits (LSBs) are the control bits. This input is a high impedance CMOS input.
16	LE	Load Enable Input. When LE is high, the data stored in the input shift register is loaded into one of the eight latches; the latch is selected using the control bits. This input is a high impedance CMOS input.
17	MUXOUT	Multiplexer Output. This pin allows various internal signals to be accessed externally.
18	SDV_{DD}	Power Supply for the Digital Σ-Δ Modulator. Place decoupling capacitors to the ground plane as close as possible to this pin.
19	DV_{DD}	Positive Power Supply for the Digital Section. Place decoupling capacitors to the digital ground plane as close as possible to this pin.
20, 21	SW1, SW2	Fast Lock Switches.
22	V_P	Charge Pump Power Supply. The voltage on this pin must be greater than or equal to AV_{DD}.
23	R_{SET}	Reset. Connecting a resistor between this pin and ground sets the maximum charge pump output current. The relationship between I_{CP} and R_{SET} is as follows: $I_{CP_MAX} = 24.48/R_{SET}$ where: $I_{CP_MAX} = 4.8$ mA. $R_{SET} = 5.1$ kΩ.
24	CP	Charge Pump Output. When the charge pump is enabled, this output provides $\pm I_{CP}$ to the external loop filter, which, in turn, drives the external VCO.
25	EPAD	Exposed Pad. The LFCSP has an exposed pad that must be connected to AGND.

TYPICAL PERFORMANCE CHARACTERISTICS

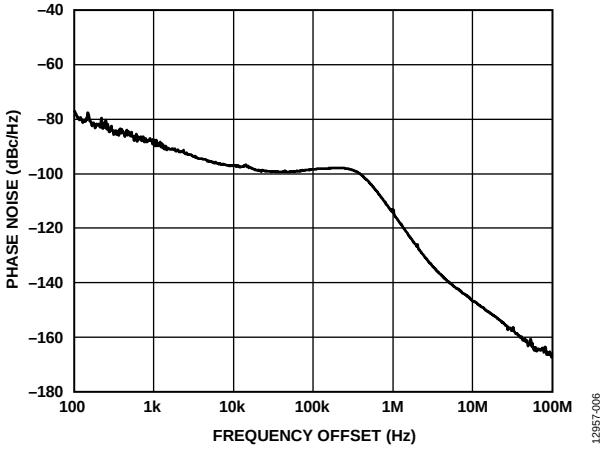

Figure 6. Phase Noise at 12.002 GHz, f_{PFD} = 100 MHz, I_{CP} = 2.5 mA, Loop Bandwidth = 250 kHz, Bleed Current = 11.03 µA

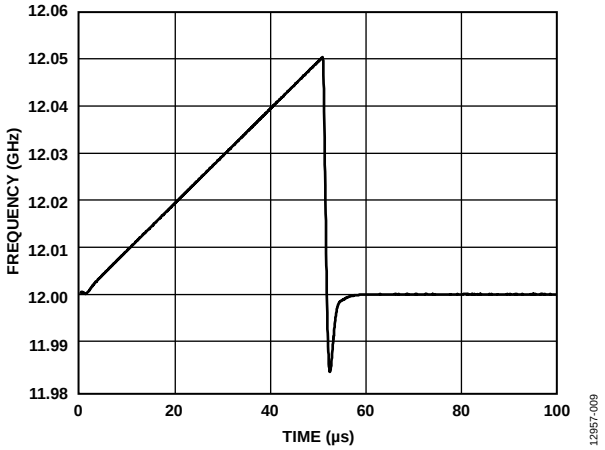

Figure 9. Sawtooth Burst, f_{PFD} = 100 MHz, I_{CP} = 2.5 mA, Loop Bandwidth = 250 kHz, CLK_1 = 3, CLK_2 = 26, DEV = 1024, DEV_OFFSET = 8, Number of Steps = 64

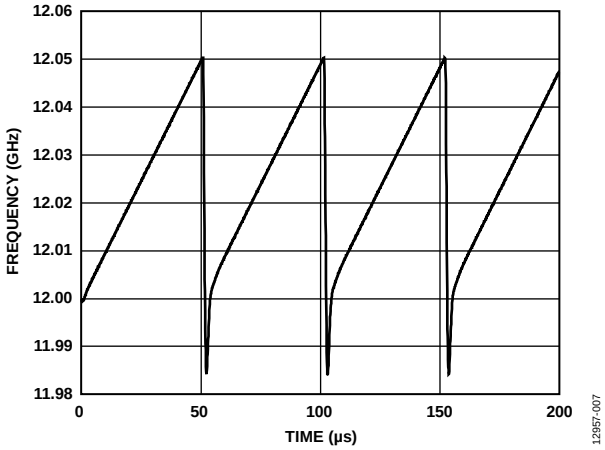

Figure 7. Sawtooth Ramp, f_{PFD} = 100 MHz, I_{CP} = 2.5 mA, Loop Bandwidth = 250 kHz, CLK_1 = 3, CLK_2 = 26, DEV = 1024, DEV_OFFSET = 8, Number of Steps = 64

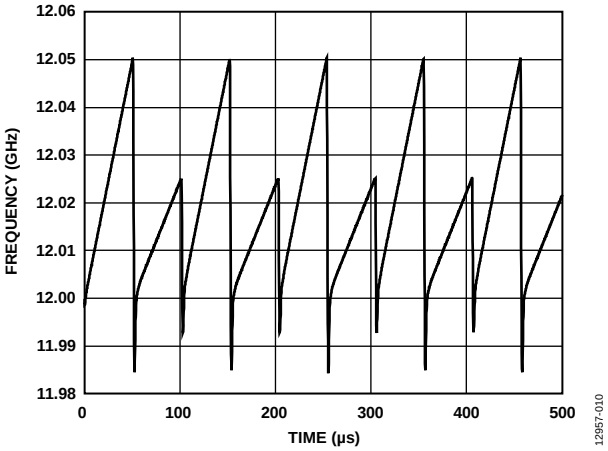

Figure 10. Dual Sawtooth Ramp, f_{PFD} = 100 MHz, I_{CP} = 2.5 mA, Loop Bandwidth = 250 kHz, CLK_1 = 3; First Ramp: CLK_2 = 26, DEV = 1024, DEV_OFFSET = 8, Number of Steps = 64; Second Ramp: CLK_2 = 52, DEV = 1024, DEV_OFFSET = 7, Number of Steps = 64

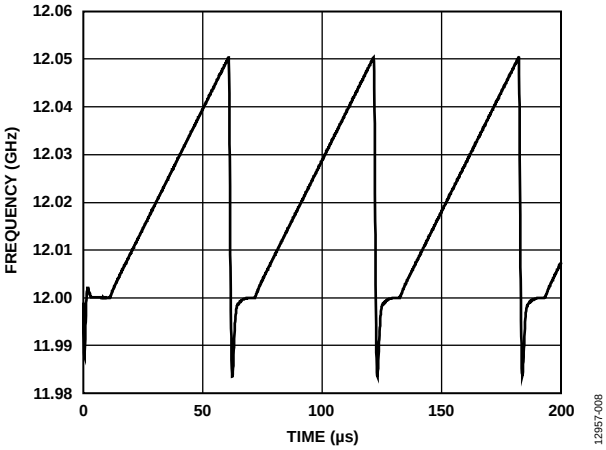

Figure 8. Sawtooth Ramp with Delay, f_{PFD} = 100 MHz, I_{CP} = 2.5 mA, Loop Bandwidth = 250 kHz, CLK_1 = 3, CLK_2 = 26, DEV = 1024, DEV_OFFSET = 8, Number of Steps = 64, Delay Word = 1000

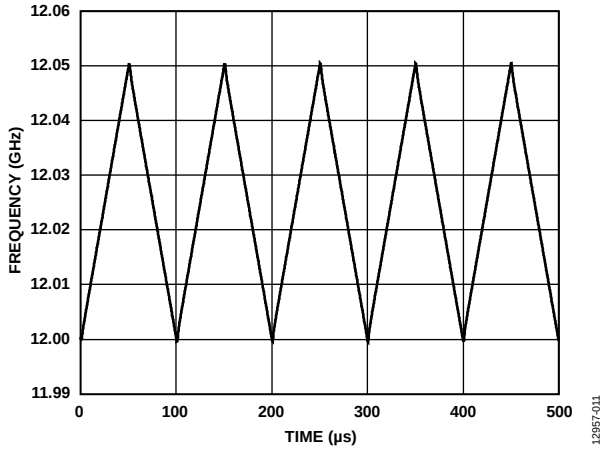

Figure 11. Triangle Ramp, f_{PFD} = 100 MHz, I_{CP} = 2.5 mA, Loop Bandwidth = 250 kHz, CLK_1 = 3, CLK_2 = 26, DEV = 1024, DEV_OFFSET = 8, Number of Steps = 64

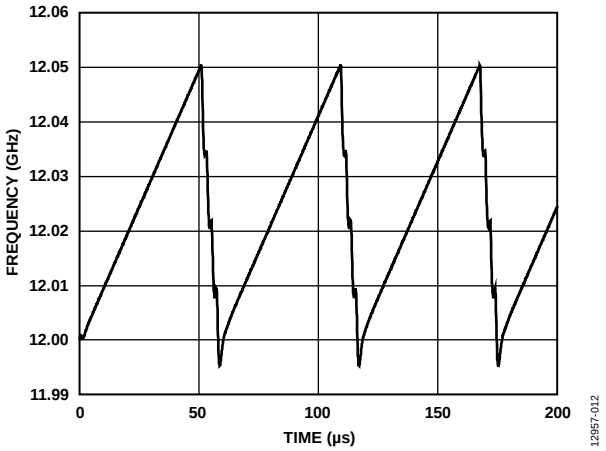

Figure 12. Fast Ramp (Triangle Ramp with Different Slopes), f_{PFD} = 100 MHz, I_{CP} = 2.5 mA, Loop Bandwidth = 250 kHz, CLK_1 = 3; Up Ramp: CLK_2 = 26, DEV = 1024, DEV_OFFSET = 8, Number of Steps = 64; Down Ramp: CLK_2 = 70, DEV = 16,384, DEV_OFFSET = 8, Number of Steps = 4

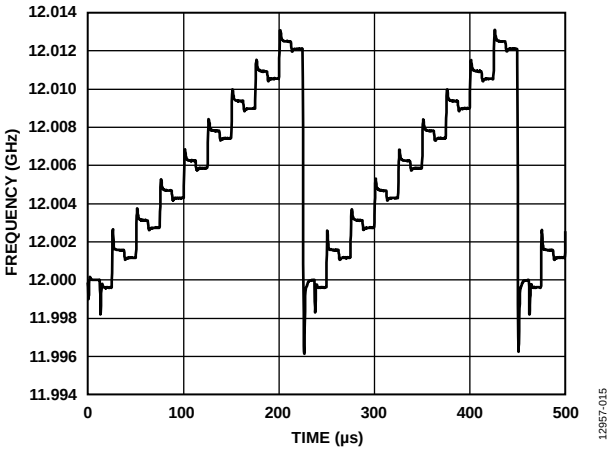

Figure 15. FSK Ramp, f_{PFD} = 100 MHz, I_{CP} = 2.5 mA, Loop Bandwidth = 250 kHz, CLK_1 = 3, CLK_2 = 26, DEV = 1024, DEV_OFFSET = 8, Number of Steps = 64; FSK: DEV = −512, DEV_OFFSET = 8

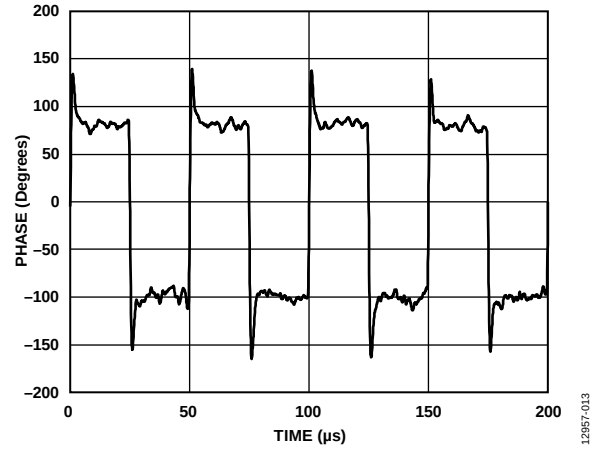

Figure 13. Phase Shift Keying (PSK), Loop Bandwidth = 250 kHz, Phase Value = 1024, Data Rate = 20 kHz

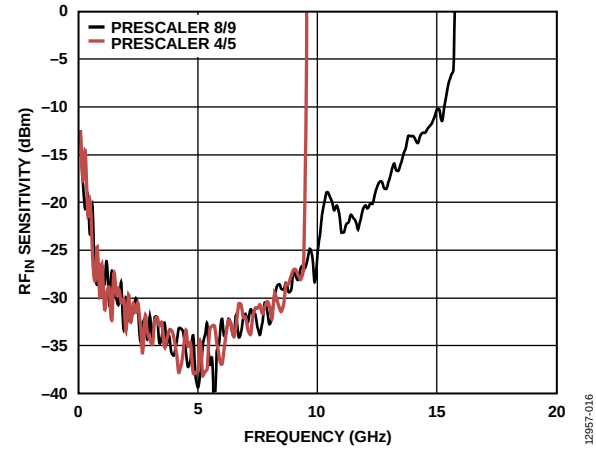

Figure 16. RF_{IN} Sensitivity at Nominal Temperature

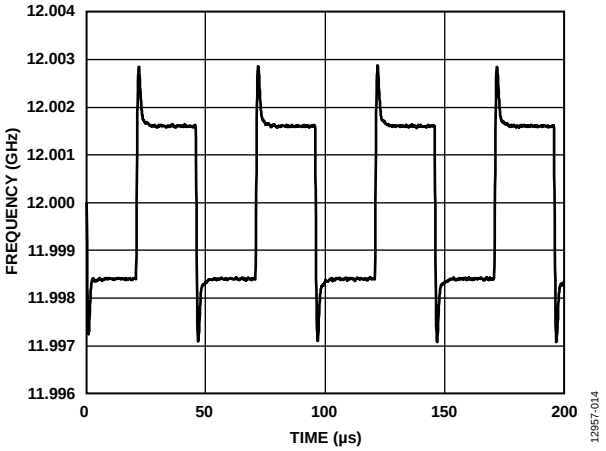

Figure 14. Frequency Shift Keying (FSK), Loop Bandwidth = 250 kHz, DEV = 1049, DEV_OFFSET = 9, Data Rate = 20 kHz

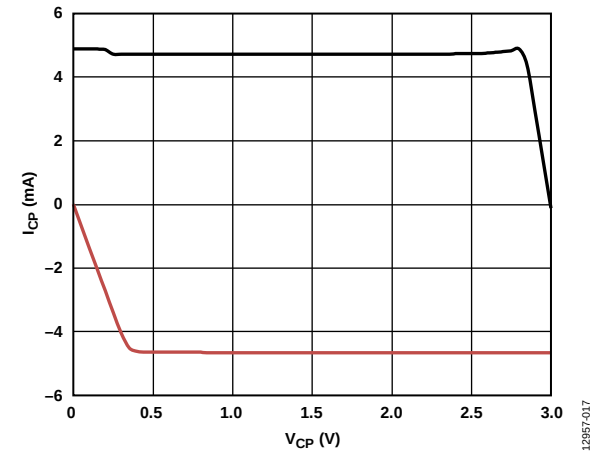

Figure 17. Charge Pump Output Characteristics

THEORY OF OPERATION

REFERENCE INPUT SECTION

Figure 18 shows the reference input stage. The SW1 and SW2 switches are normally closed (NC in Figure 18). The SW3 internal switch is normally open (NO in Figure 18). When power-down is initiated, SW3 is closed, and SW1 and SW2 are opened. In this way, no loading of the REF_{IN} pin occurs during power-down.

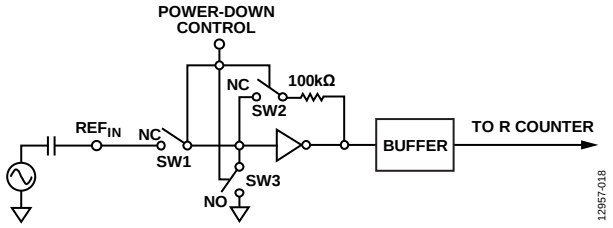

Figure 18. Reference Input Stage

RF INPUT STAGE

Figure 19 shows the RF input stage. The input stage is followed by a two-stage limiting amplifier to generate the current-mode logic (CML) clock levels required for the prescaler.

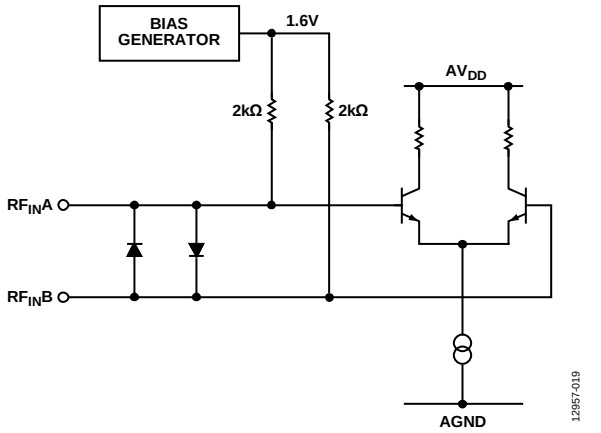

Figure 19. RF Input Stage

RF INT DIVIDER

The RF INT CMOS divider allows a division ratio in the PLL feedback counter (see Figure 20). Division ratios from 23 to 4095 are allowed.

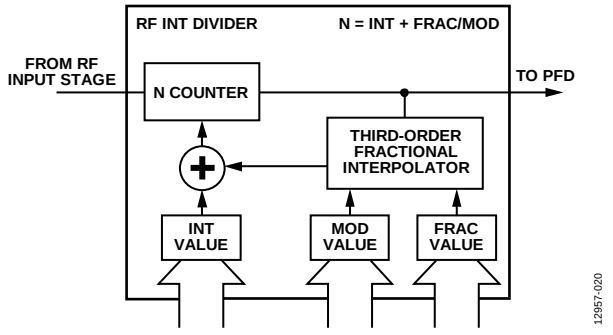

Figure 20. RF INT Divider

25-BIT FIXED MODULUS

The ADF4169 has a 25-bit fixed modulus. This modulus allows output frequencies to be spaced with a resolution of

$$f_{RES} = f_{PFD}/2^{25} \quad (1)$$

where f_{PFD} is the frequency of the phase frequency detector (PFD).

For example, with a PFD frequency of 100 MHz, frequency steps of 2.98 Hz are possible. Due to the architecture of the Σ-Δ modulator, there is a fixed $+(f_{PFD}/2^{26})$ offset on the VCO output. To remove this offset, see the Σ-Δ Modulator Mode section.

INT, FRAC, AND R COUNTER RELATIONSHIP

The INT and FRAC values, in conjunction with the R counter, make it possible to generate output frequencies that are spaced by fractions of the PFD frequency.

The RF VCO frequency (RF_{OUT}) equation is

$$RF_{OUT} = (INT + (FRAC/2^{25})) \times f_{PFD} \quad (2)$$

where:
RF_{OUT} is the output frequency of the external VCO.
INT is the preset divide ratio of the binary 12-bit counter (23 to 4095).
FRAC is the numerator of the fractional division (0 to $(2^{25} - 1)$).

The PFD frequency (f_{PFD}) equation is

$$f_{PFD} = REF_{IN} \times ((1 + D)/(R \times (1 + T))) \quad (3)$$

where:
REF_{IN} is the reference input frequency.
D is the REF_{IN} doubler bit (0 or 1).
R is the preset divide ratio of the binary 5-bit programmable reference (R) counter (1 to 32).
T is the REF_{IN} divide by 2 bit (0 or 1).

R COUNTER

The 5-bit R counter allows the reference input (REF_{IN}) frequency to be divided down to supply the reference clock to the PFD. Division ratios from 1 to 32 are allowed.

PHASE FREQUENCY DETECTOR AND CHARGE PUMP

The PFD takes inputs from the R counter and N counter and produces an output proportional to the phase and frequency difference between them. Figure 21 shows a simplified schematic of the PFD.

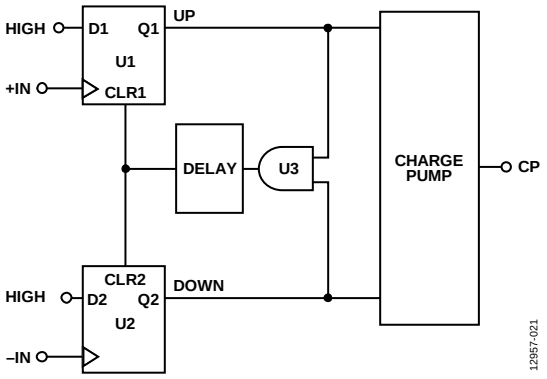

Figure 21. PFD Simplified Schematic

The PFD includes a fixed delay element that sets the width of the antibacklash pulse, which is typically 1 ns. This pulse ensures that there is no dead zone in the PFD transfer function and gives a consistent reference spur level.

MUXOUT AND LOCK DETECT

The multiplexer output on the ADF4169 allows the user to access various internal points on the chip. The state of MUXOUT is controlled by the M4, M3, M2, and M1 bits in Register R0 (see Figure 25). Figure 22 shows the MUXOUT section in block diagram form.

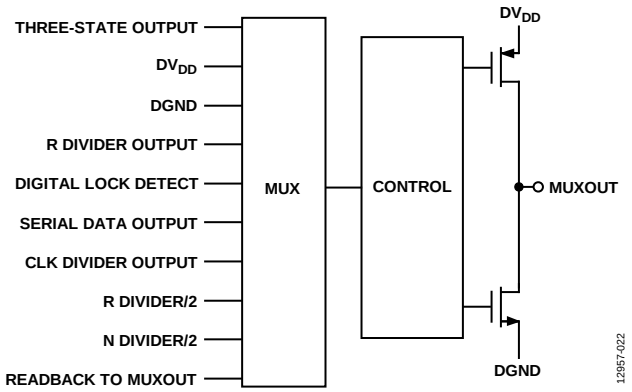

Figure 22. MUXOUT Schematic

INPUT SHIFT REGISTER

The ADF4169 digital section includes a 5-bit R counter, a 12-bit INT counter, and a 25-bit FRAC counter. Data is clocked into the 32-bit input shift register on each rising edge of CLK. The data is clocked in MSB first. Data is transferred from the input shift register to one of eight latches on the rising edge of LE.

The destination latch is determined by the state of the three control bits (C3, C2, and C1) in the input shift register. As shown in Figure 2, the control bits are the three LSBs (DB2, DB1, and DB0, respectively). Table 7 shows the truth table for these bits. Figure 23 and Figure 24 provide a summary of how the latches are programmed.

Table 7. Truth Table for the C3, C2, and C1 Control Bits

Control Bits			
C3	**C2**	**C1**	**Register**
0	0	0	R0
0	0	1	R1
0	1	0	R2
0	1	1	R3
1	0	0	R4
1	0	1	R5
1	1	0	R6
1	1	1	R7

PROGRAM MODES

Table 7 and Figure 25 through Figure 32 show how the program modes are set up in the ADF4169.

The following settings in the ADF4169 are double buffered: LSB fractional value, phase value, charge pump current setting, reference divide by 2, reference doubler, R counter value, and CLK_1 divider value. Before the device uses a new value for any double-buffered setting, the following two events must occur:

1. The new value is latched into the device by writing to the appropriate register.
2. A new write is performed to Register 0 (R0).

For example, updating the fractional value involves a write to the 13 LSB bits in Register R1 and the 12 MSB bits in Register R0. Register R1 must be written to first, followed by the write to R0. The frequency change begins after the write to Register R0. Double buffering ensures that the bits written to Register R1 do not take effect until after the write to Register R0.

REGISTER MAPS

FRAC/INT REGISTER (R0)

RAMP ON	MUXOUT CONTROL				12-BIT INTEGER VALUE (INT)												12-BIT MSB FRACTIONAL VALUE (FRAC)												CONTROL BITS		
DB31	DB30	DB29	DB28	DB27	DB26	DB25	DB24	DB23	DB22	DB21	DB20	DB19	DB18	DB17	DB16	DB15	DB14	DB13	DB12	DB11	DB10	DB9	DB8	DB7	DB6	DB5	DB4	DB3	DB2	DB1	DB0
R1	M4	M3	M2	M1	N12	N11	N10	N9	N8	N7	N6	N5	N4	N3	N2	N1	F25	F24	F23	F22	F21	F20	F19	F18	F17	F16	F15	F14	C3(0)	C2(0)	C1(0)

LSB FRAC REGISTER (R1)

RESERVED			PHASE ADJUST	DBB 13-BIT LSB FRACTIONAL VALUE (FRAC)													DBB 12-BIT PHASE VALUE												CONTROL BITS		
DB31	DB30	DB29	DB28	DB27	DB26	DB25	DB24	DB23	DB22	DB21	DB20	DB19	DB18	DB17	DB16	DB15	DB14	DB13	DB12	DB11	DB10	DB9	DB8	DB7	DB6	DB5	DB4	DB3	DB2	DB1	DB0
0	0	0	P1	F13	F12	F11	F10	F9	F8	F7	F6	F5	F4	F3	F2	F1	P12	P11	P10	P9	P8	P7	P6	P5	P4	P3	P2	P1	C3(0)	C2(0)	C1(1)

R DIVIDER REGISTER (R2)

RESERVED			CSR	DBB CP CURRENT SETTING				RESERVED	PRESCALER	RDIV2 DBB	REFERENCE DOUBLER DBB	DBB 5-BIT R COUNTER					DBB 12-BIT CLK_1 DIVIDER VALUE												CONTROL BITS		
DB31	DB30	DB29	DB28	DB27	DB26	DB25	DB24	DB23	DB22	DB21	DB20	DB19	DB18	DB17	DB16	DB15	DB14	DB13	DB12	DB11	DB10	DB9	DB8	DB7	DB6	DB5	DB4	DB3	DB2	DB1	DB0
0	0	0	CR1	CPI4	CPI3	CPI2	CPI1	0	P1	U2	U1	R5	R4	R3	R2	R1	D12	D11	D10	D9	D8	D7	D6	D5	D4	D3	D2	D1	C3(0)	C2(1)	C1(0)

FUNCTION REGISTER (R3)

RESERVED							NEG BLEED CURRENT			NEG BLEED CURRENT ENABLE	RESERVED			RESERVED	LOL	N SEL	Σ-Δ RESET	RESERVED		RAMP MODE		PSK	FSK	LDP	PD POLARITY	POWER-DOWN	CP THREE-STATE	COUNTER RESET	CONTROL BITS		
DB31	DB30	DB29	DB28	DB27	DB26	DB25	DB24	DB23	DB22	DB21	DB20	DB19	DB18	DB17	DB16	DB15	DB14	DB13	DB12	DB11	DB10	DB9	DB8	DB7	DB6	DB5	DB4	DB3	DB2	DB1	DB0
0	0	0	0	0	0	0	NB3	NB2	NB1	0	0	0	0	1	L1	NS1	U12	0	0	RM2	RM1	0	0	U11	U10	U9	U8	U7	C3(0)	C2(1)	C1(1)

NOTES
1. DBB = DOUBLE-BUFFERED BITS.

12957-023

Figure 23. Register Summary 1

CLOCK REGISTER (R4)

LE SEL	Σ-Δ MODULATOR MODE					RAMP STATUS					CLK DIV MODE		12-BIT CLK_2 DIVIDER VALUE												CLK DIV SEL	RESERVED			CONTROL BITS		
DB31	DB30	DB29	DB28	DB27	DB26	DB25	DB24	DB23	DB22	DB21	DB20	DB19	DB18	DB17	DB16	DB15	DB14	DB13	DB12	DB11	DB10	DB9	DB8	DB7	DB6	DB5	DB4	DB3	DB2	DB1	DB0
LS1	S5	S4	S3	S2	S1	R5	R4	R3	R2	R1	C2	C1	D12	D11	D10	D9	D8	D7	D6	D5	D4	D3	D2	D1	CS1	0	0	0	C3(1)	C2(0)	C1(0)

DEVIATION REGISTER (R5)

RESERVED	TX_{DATA} INVERT	TX_{DATA} RAMP CLK	RESERVED	INTERRUPT		FSK RAMP ENABLE	DUAL RAMP	DEV SEL	4-BIT DEVIATION OFFSET WORD				16-BIT DEVIATION WORD																CONTROL BITS		
DB31	DB30	DB29	DB28	DB27	DB26	DB25	DB24	DB23	DB22	DB21	DB20	DB19	DB18	DB17	DB16	DB15	DB14	DB13	DB12	DB11	DB10	DB9	DB8	DB7	DB6	DB5	DB4	DB3	DB2	DB1	DB0
0	0	TR1	0	I2	I1	0	0	DS1	DO4	DO3	DO2	DO1	D16	D15	D14	D13	D12	D11	D10	D9	D8	D7	D6	D5	D4	D3	D2	D1	C3(1)	C2(0)	C1(1)

STEP REGISTER (R6)

RESERVED								STEP SEL	20-BIT STEP WORD																				CONTROL BITS		
DB31	DB30	DB29	DB28	DB27	DB26	DB25	DB24	DB23	DB22	DB21	DB20	DB19	DB18	DB17	DB16	DB15	DB14	DB13	DB12	DB11	DB10	DB9	DB8	DB7	DB6	DB5	DB4	DB3	DB2	DB1	DB0
0	0	0	0	0	0	0	0	SSE1	S20	S19	S18	S17	S16	S15	S14	S13	S12	S11	S10	S9	S8	S7	S6	S5	S4	S3	S2	S1	C3(1)	C2(1)	C1(0)

DELAY REGISTER (R7)

RESERVED								TX_{DATA} TRIGGER DELAY	TRI DELAY	SINGULAR FULL TRIANGLE	TX_{DATA} TRIGGER	FAST RAMP	RESERVED	RAMP DELAY	DEL CLK SEL	DEL START EN	12-BIT DELAY START WORD													CONTROL BITS		
DB31	DB30	DB29	DB28	DB27	DB26	DB25	DB24	DB23	DB22	DB21	DB20	DB19	DB18	DB17	DB16	DB15	DB14	DB13	DB12	DB11	DB10	DB9	DB8	DB7	DB6	DB5	DB4	DB3	DB2	DB1	DB0
0	0	0	0	0	0	0	0	0	TD1	ST1	TR1	FR1	0	RD1	DC1	DSE1	DS12	DS11	DS10	DS9	DS8	DS7	DS6	DS5	DS4	DS3	DS2	DS1	C3(1)	C2(1)	C1(1)

12957-024

NOTES
1. DBB = DOUBLE-BUFFERED BITS.

Figure 24. Register Summary 2

FRAC/INT REGISTER (R0) MAP

When Bits DB[2:0] are set to 000, the on-chip FRAC/INT register (Register R0) is programmed (see Figure 25).

Ramp On

When Bit DB31 is set to 1, the ramp function is enabled. When Bit DB31 is set to 0, the ramp function is disabled.

MUXOUT Control

The on-chip multiplexer of the ADF4169 is controlled by Bits DB[30:27]. See Figure 25 for the truth table.

12-Bit Integer Value (INT)

Bits DB[26:15] set the INT value, which forms part of the overall feedback division factor. For more information, see the INT, FRAC, and R Counter Relationship section.

12-Bit MSB Fractional Value (FRAC)

Bits DB[14:3], along with Bits DB[27:15] in the LSB FRAC register (Register R1), set the FRAC value that is loaded into the fractional interpolator. The FRAC value forms part of the overall feedback division factor. These 12 bits are the MSBs of the 25-bit FRAC value; Bits DB[27:15] in the LSB FRAC register (Register R1) are the LSBs. For more information, see the RF Synthesizer Worked Example section.

RAMP ON	MUXOUT CONTROL				12-BIT INTEGER VALUE (INT)												12-BIT MSB FRACTIONAL VALUE (FRAC)												CONTROL BITS		
DB31	DB30	DB29	DB28	DB27	DB26	DB25	DB24	DB23	DB22	DB21	DB20	DB19	DB18	DB17	DB16	DB15	DB14	DB13	DB12	DB11	DB10	DB9	DB8	DB7	DB6	DB5	DB4	DB3	DB2	DB1	DB0
R1	M4	M3	M2	M1	N12	N11	N10	N9	N8	N7	N6	N5	N4	N3	N2	N1	F25	F24	F23	F22	F21	F20	F19	F18	F17	F16	F15	F14	C3(0)	C2(0)	C1(0)

R1	RAMP ON
0	RAMP DISABLED
1	RAMP ENABLED

M4	M3	M2	M1	OUTPUT
0	0	0	0	THREE-STATE OUTPUT
0	0	0	1	DV_{DD}
0	0	1	0	DGND
0	0	1	1	R DIVIDER OUTPUT
0	1	0	0	RESERVED
0	1	0	1	RESERVED
0	1	1	0	DIGITAL LOCK DETECT
0	1	1	1	SERIAL DATA OUTPUT
1	0	0	0	RESERVED
1	0	0	1	RESERVED
1	0	1	0	CLK DIVIDER OUTPUT
1	0	1	1	RESERVED
1	1	0	0	RESERVED
1	1	0	1	R DIVIDER/2
1	1	1	0	N DIVIDER/2
1	1	1	1	READBACK TO MUXOUT

F25	F24	...	F15	F14	MSB FRACTIONAL VALUE (FRAC)*
0	0	...	0	0	0
0	0	...	0	1	1
0	0	...	1	0	2
0	0	...	1	1	3
.	.	...	.	.	.
.	.	...	.	.	.
.	.	...	.	.	.
1	1	...	0	0	4092
1	1	...	0	1	4093
1	1	...	1	0	4094
1	1	...	1	1	4095

*THE FRAC VALUE IS MADE UP OF THE 12-BIT MSB STORED IN REGISTER R0 AND THE 13-BIT LSB STORED IN REGISTER R1. FRAC VALUE = 13-BIT LSB + 12-BIT MSB × 2^{13}.

N12	N11	N10	N9	N8	N7	N6	N5	N4	N3	N2	N1	INTEGER VALUE (INT)
0	0	0	0	0	0	0	1	0	1	1	1	23
0	0	0	0	0	0	0	1	1	0	0	0	24
0	0	0	0	0	0	0	1	1	0	0	1	25
0	0	0	0	0	0	0	1	1	0	1	0	26
.	.	.	.	.	.	.	.	.	.	.	.	.
.	.	.	.	.	.	.	.	.	.	.	.	.
.	.	.	.	.	.	.	.	.	.	.	.	.
1	1	1	1	1	1	1	1	1	1	0	1	4093
1	1	1	1	1	1	1	1	1	1	1	0	4094
1	1	1	1	1	1	1	1	1	1	1	1	4095

12957-025

Figure 25. FRAC/INT Register (R0) Map

LSB FRAC REGISTER (R1) MAP

When Bits DB[2:0] are set to 001, the on-chip LSB FRAC register (Register R1) is programmed (see Figure 26).

Reserved Bits

All reserved bits must be set to 0 for normal operation.

Phase Adjustment

Bit DB28 enables and disables phase adjustment. The phase shift is generated by the value programmed in Bits DB[14:3].

13-Bit LSB Fractional Value (FRAC)

Bits DB[27:15], along with Bits DB[14:3] in the FRAC/INT register (Register R0), set the FRAC value that is loaded into the fractional interpolator. The FRAC value forms part of the overall feedback division factor.

These 13 bits are the LSBs of the 25-bit FRAC value; Bits DB[14:3] in the FRAC/INT register (Register R0) are the MSBs. For more information, see the RF Synthesizer Worked Example section.

12-Bit Phase Value

Bits DB[14:3] control the phase word. The phase word is used to increase the RF output phase relative to the current phase. The phase change occurs after a write to Register R0.

$$Phase\ Shift = (Phase\ Value \times 360°)/2^{12}$$

For example, Phase Value = 512 increases the phase by 45°.

To use phase adjustment, Bit DB28 must be set to 1. When phase adjustment is not used, set the phase value to 0.

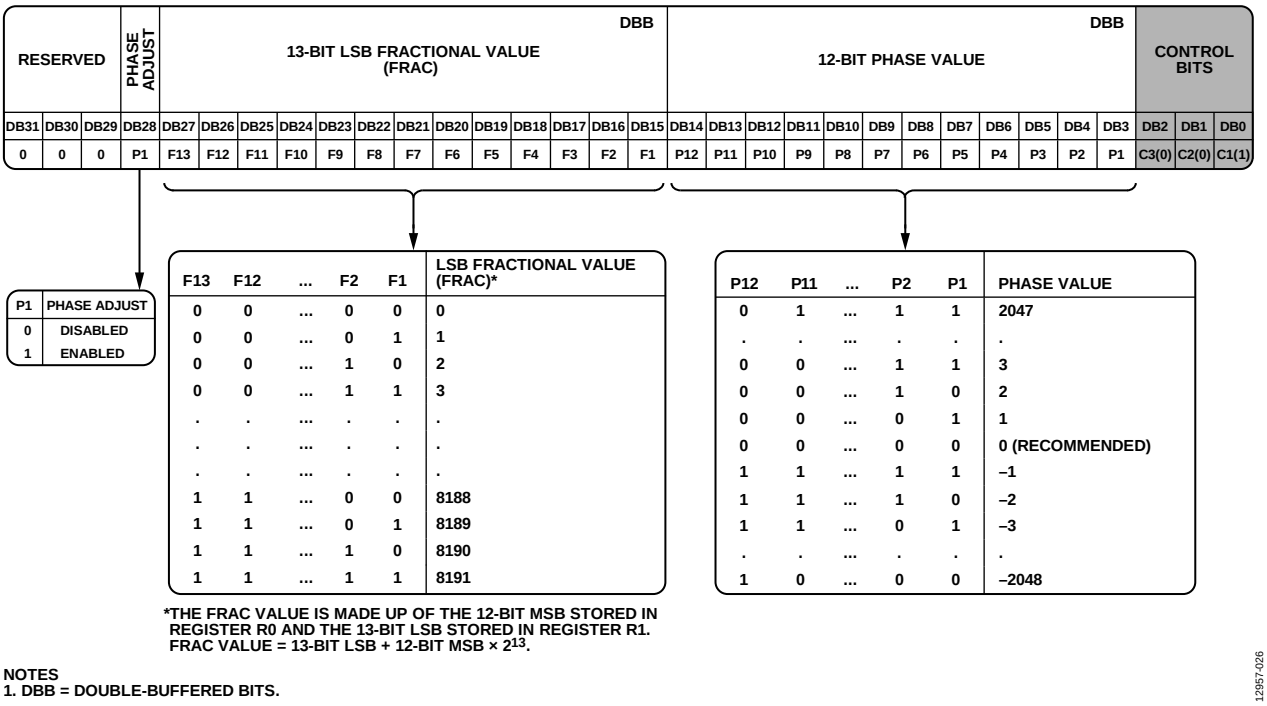

Figure 26. LSB FRAC Register (R1) Map

R DIVIDER REGISTER (R2) MAP

When Bits DB[2:0] are set to 010, the on-chip R divider register (Register R2) is programmed (see Figure 27).

Reserved Bits

All reserved bits must be set to 0 for normal operation.

CSR Enable

When Bit DB28 is set to 1, cycle slip reduction (CSR) is enabled. CSR is a method for improving lock times. Note that the signal at the PFD must have a 50% duty cycle for CSR to work. In addition, the charge pump current setting must be set to its minimum value. For more information, see the Cycle Slip Reduction for Faster Lock Times section.

The CSR feature can be used only when the phase detector polarity setting is positive (Bit DB6 = 1 in Register R3). CSR cannot be used if the phase detector polarity setting is negative (Bit DB6 = 0 in Register R3).

Charge Pump (CP) Current Setting

Bits DB[27:24] set the charge pump current (see Figure 27). Set these bits to the charge pump current that the loop filter is designed with. Best practice is to design the loop filter for a charge pump current of 2.5 mA or 2.81 mA and then use the programmable charge pump current to tweak the frequency response. See the Reference Doubler section for information on setting the charge pump current when the doubler is enabled.

Prescaler

The dual-modulus prescaler (P/P + 1), along with the INT, FRAC, and fixed modulus values, determines the overall division ratio from RF_{IN} to the PFD input. Bit DB22 sets the prescaler value.

Operating at CML levels, the prescaler takes the clock from the RF input stage and divides it down for the counters. The prescaler is based on a synchronous 4/5 core. When the prescaler is set to 4/5, the maximum RF frequency allowed is 8 GHz. Therefore, when operating the ADF4169 at frequencies greater than 8 GHz, the prescaler must be set to 8/9. The prescaler limits the INT value as follows:

- Prescaler = 4/5: N_{MIN} = 23
- Prescaler = 8/9: N_{MIN} = 75

RDIV2

When Bit DB21 is set to 1, the R divider is enabled and a divide by 2 toggle flip-flop is inserted between the R counter and the PFD. This feature provide a 50% duty cycle signal at the PFD.

Reference Doubler

When Bit DB20 is set to 0, the reference doubler is disabled, and the REF_{IN} signal is fed directly to the 5-bit R counter. When Bit DB20 is set to 1, the reference doubler is enabled, and the REF_{IN} frequency is multiplied by a factor of 2 before the signal is fed into the 5-bit R counter. When the doubler is disabled, the REF_{IN} falling edge is the active edge at the PFD input to the fractional synthesizer. When the doubler is enabled, both the rising and falling edges of REF_{IN} become active edges at the PFD input.

When the reference doubler is enabled, for optimum phase noise performance, it is recommended to only use charge pump current settings 0b0000 to 0b0111, that is, 0.31 mA to 2.5 mA. In this case, best practice is to design the loop filter for a charge pump current of 1.25 mA or 1.57 mA and then use the programmable charge pump current to tweak the frequency response.

For more information on using the reference doubler, see the Clock Register (R4) Map section.

5-Bit R Counter

The 5-bit R counter (Bits DB[19:15]) allows the input reference frequency (REF_{IN}) to be divided down to supply the reference clock to the PFD. Division ratios from 1 to 32 are allowed.

12-Bit CLK_1 Divider Value

Bits DB[14:3] program the CLK_1 divider value, which determines the duration of the time step in ramp mode.

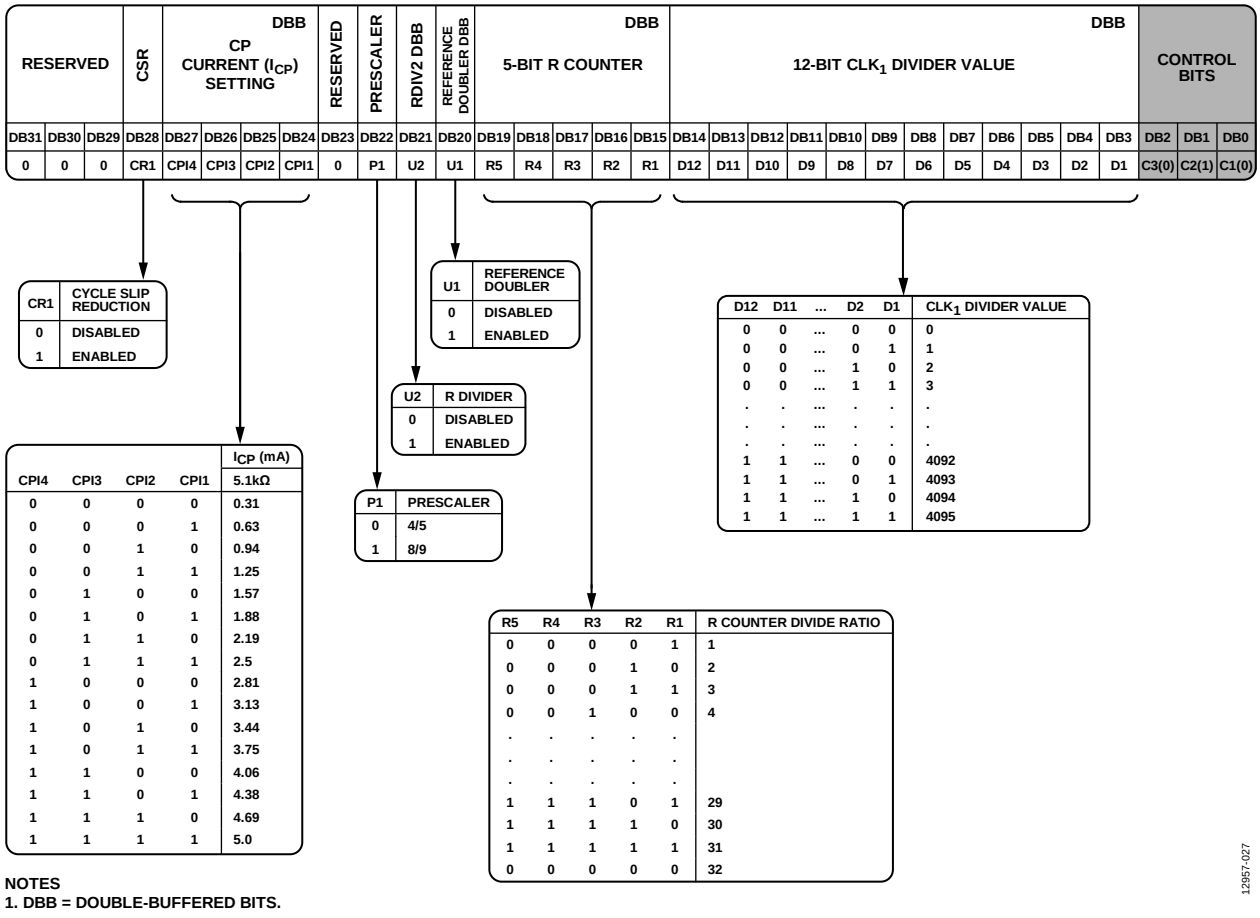

NOTES
1. DBB = DOUBLE-BUFFERED BITS.

Figure 27. R Divider Register (R2) Map

FUNCTION REGISTER (R3) MAP

When Bits DB[2:0] are set to 011, the on-chip function register (Register R3) is programmed (see Figure 28).

Reserved Bits

All reserved bits except Bit DB17 must be set to 0 for normal operation. Bit DB17 must be set to 1 for normal operation.

Negative Bleed Current

Bits DB[24:22] set the negative bleed current value (I_{BLEED}). Calculate I_{BLEED} using the following formula, and then select the value of Bits DB[24:22] that is closest to the calculated value.

$$I_{BLEED} = (4 \times I_{CP})/N$$

where:
I_{CP} is the charge pump current.
N is the N counter value.

Negative Bleed Current Enable

DB21 enables a negative bleed current in the charge pump. When the charge pump is operating in a nonlinear region, phase noise and spurious performance can degrade. Negative bleed current operates by pushing the charge pump operation region away from this nonlinear region. The programmability feature controls how far the region of operation is moved. If the current is too little, the charge pump remains in the nonlinear region; if the current is too high, the charge pump becomes unstable or degrades the maximum PFD frequency. It is necessary to experiment with various charge pump currents to find the optimum performance.

The formula for calculating the optimum negative bleed current is shown in the Negative Bleed Current section; however, experimentation may show a different current gives the optimum result.

Loss of Lock (LOL)

Bit DB16 enables or disables the loss of lock indication. When this bit is set to 0, the device indicates loss of lock even when the reference is removed. This feature provides an advantage over the standard implementation of lock detect. For more robust operation, set this bit to 1. The loss of lock does not operate as expected when negative bleed current is enabled.

N SEL

Bit DB15 can be used to circumvent the issue of pipeline delay between updates of the integer and fractional values in the N counter. Typically, the INT value is loaded first, followed by the FRAC value. This order can cause the N counter value to be incorrect for a brief period of time equal to the pipeline delay (about four PFD cycles). This delay has no effect if the INT value was not updated. However, if the INT value has changed, this incorrect N counter value can cause the PLL to overshoot in frequency while it tries to lock to the temporarily incorrect N counter value. After the correct fractional value is loaded, the PLL quickly locks to the correct frequency. Introducing an additional delay to the loading of the INT value using the N SEL bit causes the INT and FRAC values to be loaded at the same time, preventing frequency overshoot. The delay is turned on by setting Bit DB15 to 1.

Σ-Δ Reset

For most applications, Bit DB14 is set to 0. When this bit is set to 0, the Σ-Δ modulator is reset on each write to Register R0. If it is not required that the Σ-Δ modulator be reset on each write to Register R0, set this bit to 1.

Ramp Mode

Bits DB[11:10] determine the type of generated waveform (see Figure 28 and the Waveform Generation section).

PSK Enable

When Bit DB9 is set to 1, PSK modulation is enabled. When this bit is set to 0, PSK modulation is disabled. For more information, see the Phase Shift Keying section.

FSK Enable

When Bit DB8 is set to 1, FSK modulation is enabled. When this bit is set to 0, FSK modulation is disabled. For more information, see the Frequency Shift Keying section.

Lock Detect Precision (LDP)

The digital lock detect circuit monitors the PFD up and down pulses (logical OR of the up and down pulses; see Figure 21). Every 32nd pulse is measured. The LDP bit (Bit DB7) specifies the length of each lock detect reference cycle.

- LDP = 0: if five consecutive pulses of less than 14 ns are measured, digital lock detect is asserted.
- LDP = 1: if five consecutive pulses of less than 6 ns are measured, digital lock detect is asserted.

Digital lock detect remains asserted until the pulse width exceeds 22 ns, a write to Register R0 occurs, or the device is powered down. For more robust operation, set LDP = 1.

Phase Detector (PD) Polarity

Bit DB6 sets the phase detector polarity. When the VCO characteristics are positive, set this bit to 1. When the VCO characteristics are negative, set this bit to 0.

Power-Down

Bit DB5 provides the programmable power-down mode. Setting this bit to 1 performs a power-down. Setting this bit to 0 returns the synthesizer to normal operation. When the device is in software power-down mode, it retains all information in its registers. The register contents are lost only when the supplies are removed.

When power-down is activated, the following events occur:

- All active dc current paths are removed.
- The RF synthesizer counters are forced to their load state conditions.
- The charge pump is forced into three-state mode.
- The digital lock detect circuitry is reset.
- The RF_{IN} input is debiased.
- The input shift register remains active and capable of loading and latching data.

Charge Pump Three-State

When Bit DB4 is set to 1, the charge pump is placed into three-state mode. For normal charge pump operation, set this bit to 0.

RF Counter Reset

Bit DB3 is the RF counter reset bit. When this bit is set to 1, the RF synthesizer counters are held in reset. For normal operation, set this bit to 0.

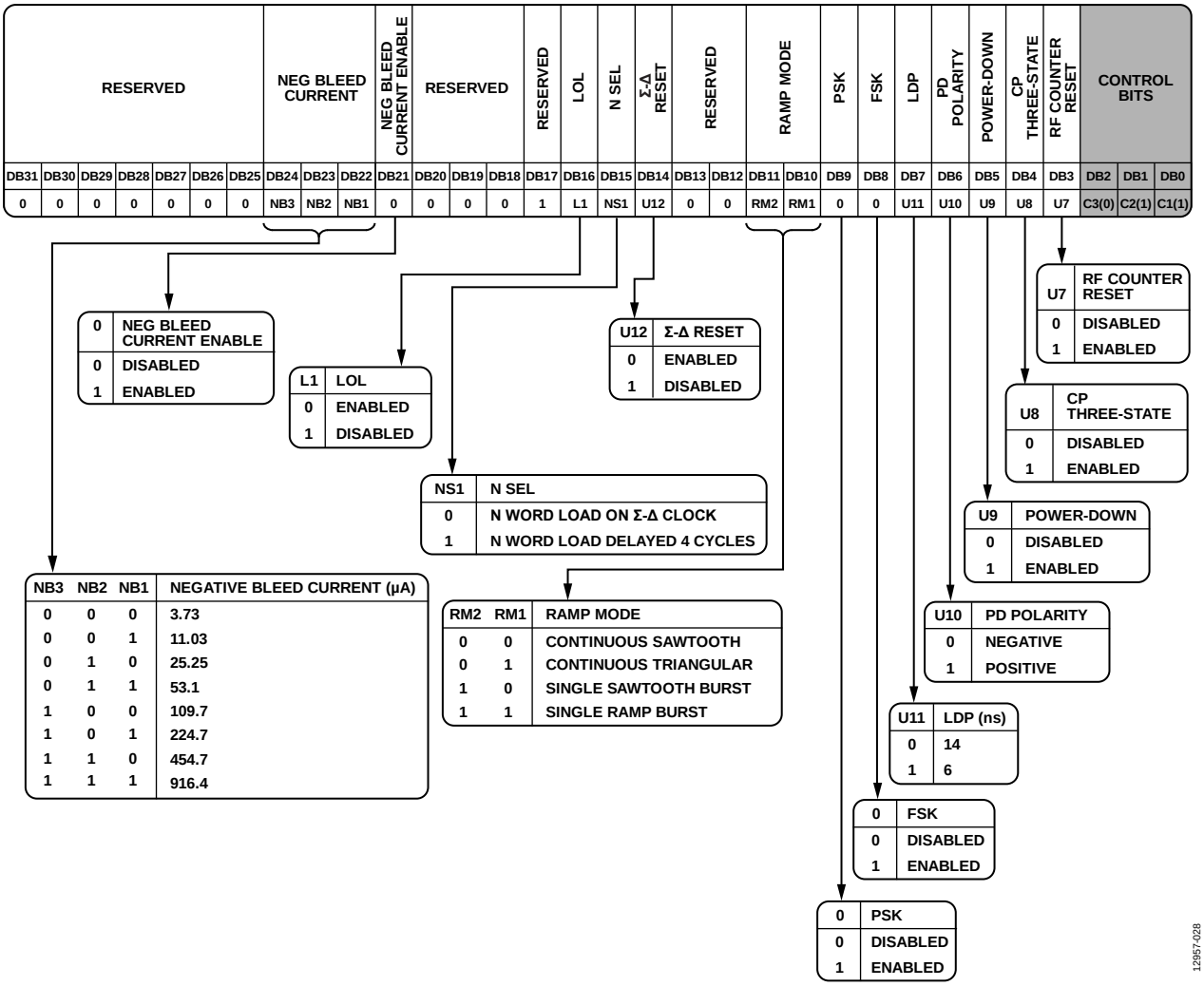

Figure 28. Function Register (R3) Map

CLOCK REGISTER (R4) MAP

When Bits DB[2:0] are set to 100, the on-chip clock register (Register R4) is programmed (see Figure 29).

If the reference doubler (R2, DB20) is enabled, the last write to R4 must have the ramp status (DB[25:21]) set to 0b11000.

To use the ramp complete to MUXOUT ramp status with the reference doubler enabled, two writes to R4 are required:

1. Program Register R4 with the ramp status = 0b00011, followed by Step 2
2. Program Register R4 with the ramp status = 0b11000.

LE SEL

In some applications, it is necessary to synchronize the LE pin with the reference signal. To do this, Bit DB31 must be set to 1. Synchronization is performed internally on the device.

Σ-Δ Modulator Mode

To completely disable the Σ-Δ modulator, set Bits DB[30:26] to 0b01110, which disables the Σ-Δ modulator and puts the ADF4169 into integer-N mode, and the channel spacing becomes equal to the PFD frequency. Both the 12-bit MSB fractional value (Register R0, DB[14:3]) and the 13-bit LSB fractional value (Register R1, DB[27:15]) must be set to 0. After writing to Register R4, Register R3 must be written to twice, to trigger an RF counter reset. (That is, write Register R3 with Bit DB3 = 1, then write Register R3 with Bit DB3 = 0.)

All features driven by the Σ-Δ modulator are disabled, such as ramping, PSK, FSK, and phase adjust.

Disabling the Σ-Δ modulator also removes the fixed $+(f_{PFD}/2^{26})$ offset on the VCO output.

For normal operation, set these bits to 0b00000.

Ramp Status

Bits DB[25:21] provide access to the following advanced features (see Figure 29):

- Readback to MUXOUT option: the synthesizer frequency at the moment of interruption can be read back (see the Interrupt Modes and Frequency Readback section).
- Ramp complete to MUXOUT option: a logic high pulse is output on the MUXOUT pin at the end of each ramp.
- Charge pump up and charge pump down options: the charge pump is forced to constantly output up or down pulses, respectively.

When using the readback to MUXOUT or ramp complete to MUXOUT option, the MUXOUT control bits in Register R0 (Bits DB[30:27]) must be set to 1111.

Clock Divider Mode

Bits DB[20:19] enable ramp divider mode or fast lock divider mode. If neither is being used, set these bits to 0b00.

12-Bit CLK_2 Divider Value

Bits DB[18:7] program the clock divider (the CLK_2 timer) when the device operates in ramp mode (see the Timeout Interval section). The CLK_2 timer also determines how long the loop remains in wideband mode when fast lock mode is used (see the Fast Lock Mode section).

Clock Divider Select

When Bit DB6 is set to 0, CLK_2 is used as the CLK_2 value for a standard ramp, such as sawtooth or triangular. When Bit DB6 is set to 1, CLK_2 is used as the CLK_2 value for the second ramp of the fast ramp or dual ramp functions. For more information, see the Waveform Deviations and Timing section.

Reserved Bits

All reserved bits (DB[5:3]) must be set to 0 for normal operation.

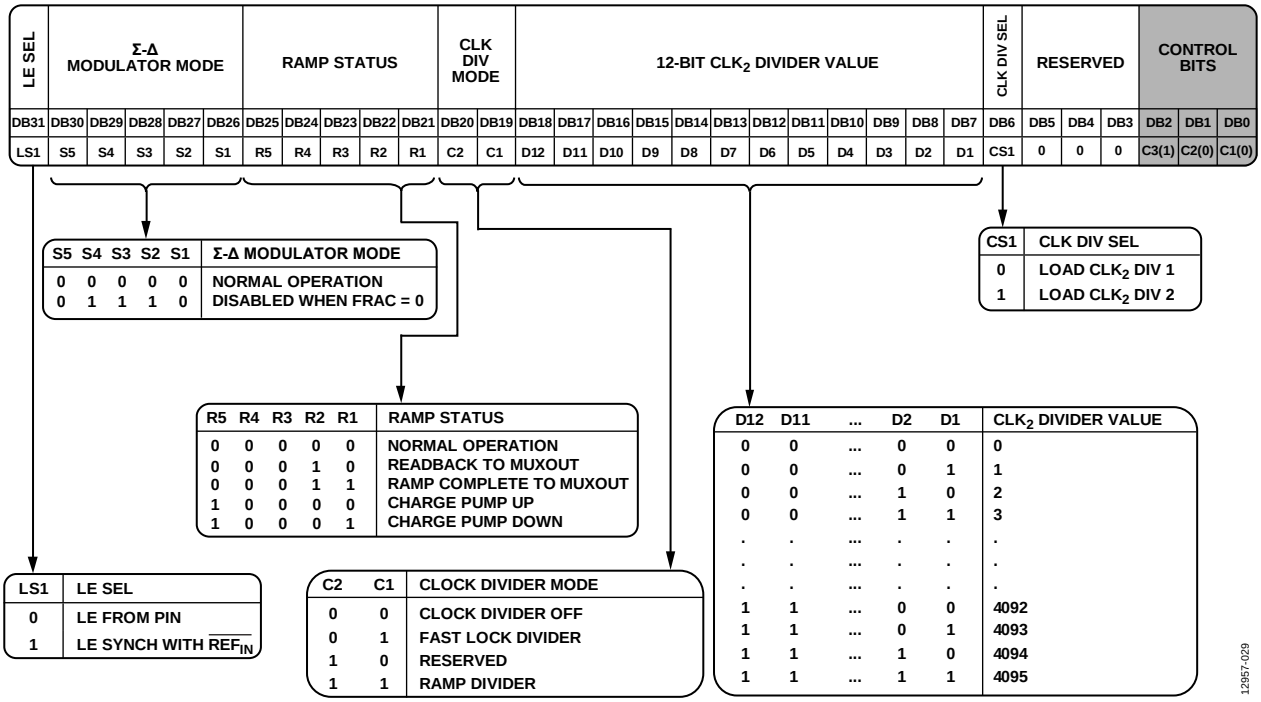

Figure 29. Clock Register (R4) Map

DEVIATION REGISTER (R5) MAP

When Bits DB[2:0] are set to 101, the on-chip deviation register (Register R5) is programmed (see Figure 30).

Reserved Bit

The reserved bit must be set to 0 for normal operation.

TX_{DATA} Invert

When Bit DB30 is set to 0, events triggered by TX_{DATA} occur on the rising edge of the TX_{DATA} pulse. When Bit DB30 is set to 1, events triggered by TX_{DATA} occur on the falling edge of the TX_{DATA} pulse.

TX_{DATA} Ramp Clock (CLK)

When Bit DB29 is set to 0, the clock divider clock is used to clock the ramp. When Bit DB29 is set to 1, the TX_{DATA} clock is used to clock the ramp.

Interrupt

Bits DB[27:26] determine which type of interrupt is used. This feature is used for reading back the INT and FRAC value of a ramp at a given moment in time (a rising edge on the TX_{DATA} pin triggers the interrupt). From the INT and FRAC bits, the frequency can be obtained. After readback, the sweep can continue or stop at the readback frequency. For more information, see the Interrupt Modes and Frequency Readback section.

FSK Ramp Enable

When Bit DB25 is set to 1, the FSK ramp is enabled. When Bit DB25 is set to 0, the FSK ramp is disabled.

Dual Ramp Enable

When Bit DB24 is set to 1, the second ramp is enabled. When Bit DB24 is set to 0, the second ramp is disabled.

Deviation Select (DEV SEL)

When Bit DB23 is set to 0, the first deviation word is selected. When Bit DB23 is set to 1, the second deviation word is selected.

4-Bit Deviation Offset Word

Bits DB[22:19] determine the deviation offset word (DEV_OFFSET). The deviation offset word affects the deviation resolution.

16-Bit Deviation Word

Bits DB[18:3] determine the signed deviation word. The deviation word defines the deviation step.

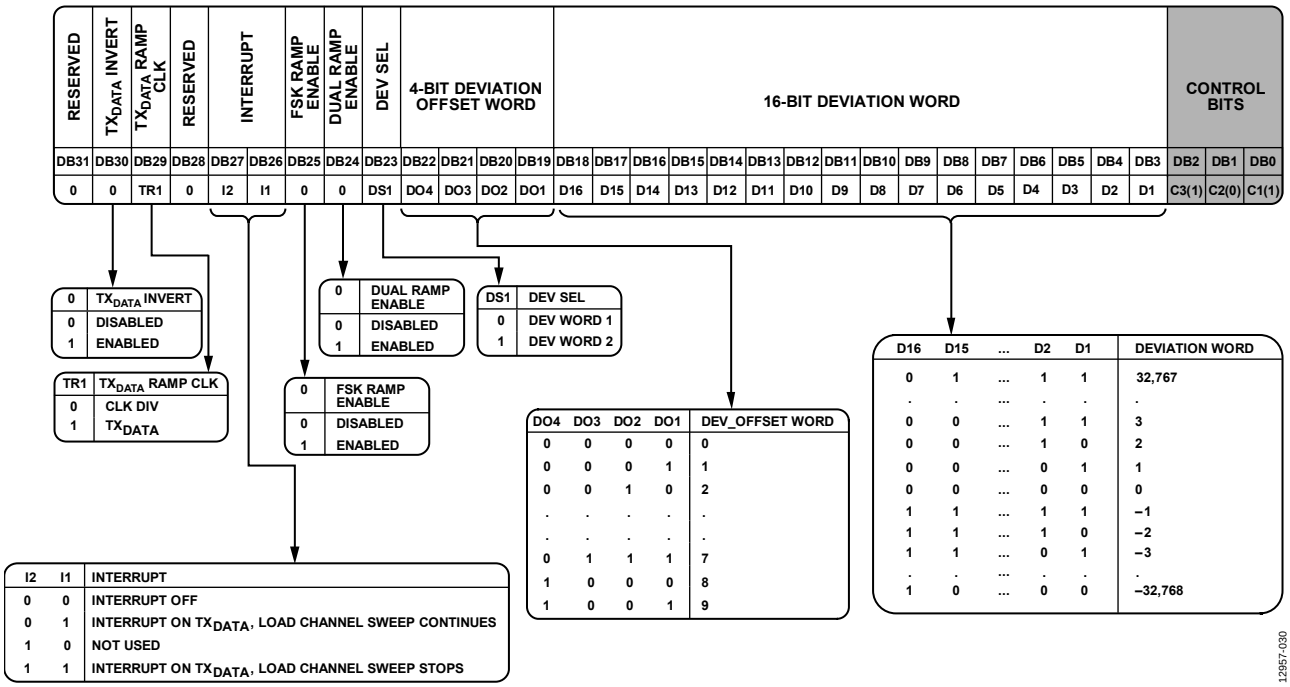

Figure 30. Deviation Register (R5) Map

STEP REGISTER (R6) MAP

When Bits DB[2:0] are set to 110, the on-chip step register (Register R6) is programmed (see Figure 31).

Reserved Bits

All reserved bits must be set to 0 for normal operation.

Step Select

When Bit DB23 is set to 0, Step Word 1 is selected. When Bit DB23 is set to 1, Step Word 2 is selected.

20-Bit Step Word

Bits DB[22:3] determine the step word. The step word is the number of steps in the ramp.

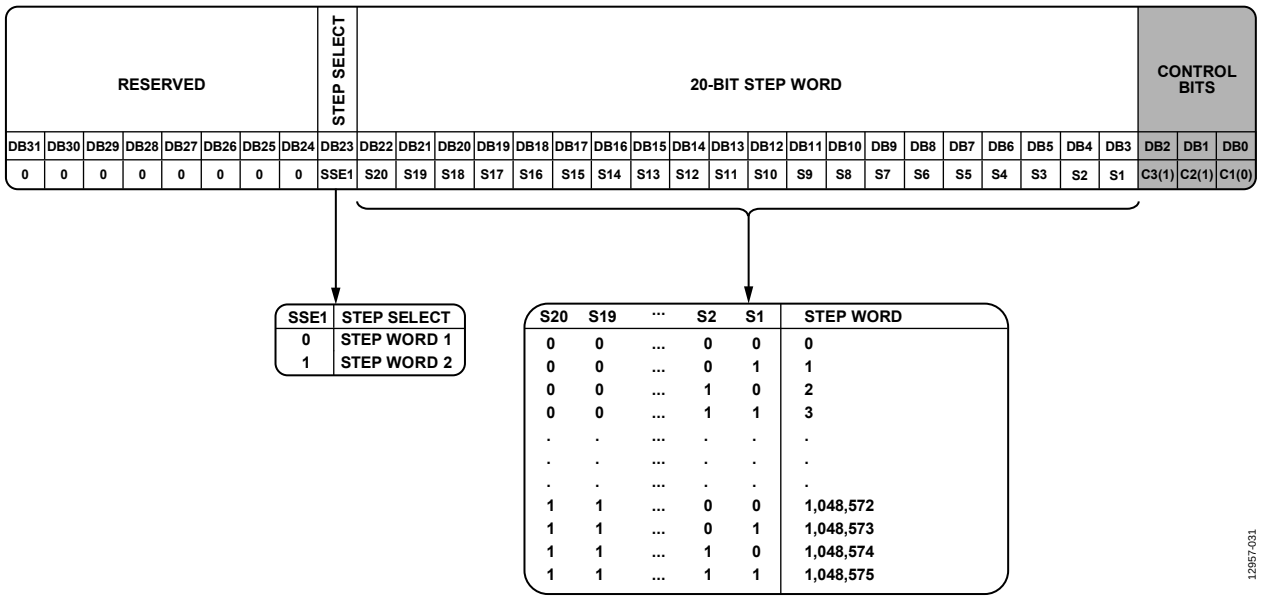

Figure 31. Step Register (R6) Map

DELAY REGISTER (R7) MAP

When Bits DB[2:0] are set to 111, the on-chip delay register (Register R7) is programmed (see Figure 32).

Reserved Bits

All reserved bits must be set to 0 for normal operation.

TX_{DATA} Trigger Delay

When Bit DB23 is set to 0, there is no delay before the start of the ramp when using TX_{DATA} to trigger a ramp. When Bit DB23 is set to 1, a delay is enabled before the start of the ramp if the delayed start is enabled via Bit DB15.

Triangular (TRI) Delay

When Bit DB22 is set to 1, a delay is enabled between each section of a triangular ramp, resulting in a clipped ramp. This setting works only for triangular ramps and when the ramp delay is activated. When Bit DB22 is set to 0, the delay between triangular ramps is disabled.

Single Full Triangle

When Bit DB21 is set to 1, the single full triangle function is enabled. When Bit DB21 is set to 0, the single full triangle function is disabled. For more information, see the Waveform Generation section.

TX_{DATA} Trigger

When Bit DB20 is set to 1, a logic high on TX_{DATA} activates the ramp. When Bit DB20 is set to 0, this function is disabled.

Fast Ramp

When Bit DB19 is set to 1, the triangular waveform is activated with two different slopes. This waveform can be used as an alternative to the sawtooth ramp because it mitigates the overshoot at the end of the ramp in a waveform. Fast ramp is achieved by changing the top frequency to the bottom frequency in a series of small steps instead of one big step. When Bit DB19 is set to 0, the fast ramp function is disabled (see the Fast Ramp Mode section).

Ramp Delay

When Bit DB17 is set to 1, the delay between ramps function is enabled. When Bit DB17 is set to 0, this function is disabled.

Delay Clock Select (DEL CLK SEL)

When Bit DB16 is set to 0, the PFD CLK is selected as the delay clock. When Bit DB16 is set to 1, PFD CLK × CLK_1 is selected as the delay clock. (CLK_1 is set by Bits DB[14:3] in Register R2.)

Delayed Start Enable (DEL START EN)

When Bit DB15 is set to 1, the delayed start is enabled. When Bit DB15 is set to 0, the delayed start is disabled.

12-Bit Delay Start Word

Bits DB[14:3] determine the delay start word. The delay start word affects the duration of the ramp start delay.

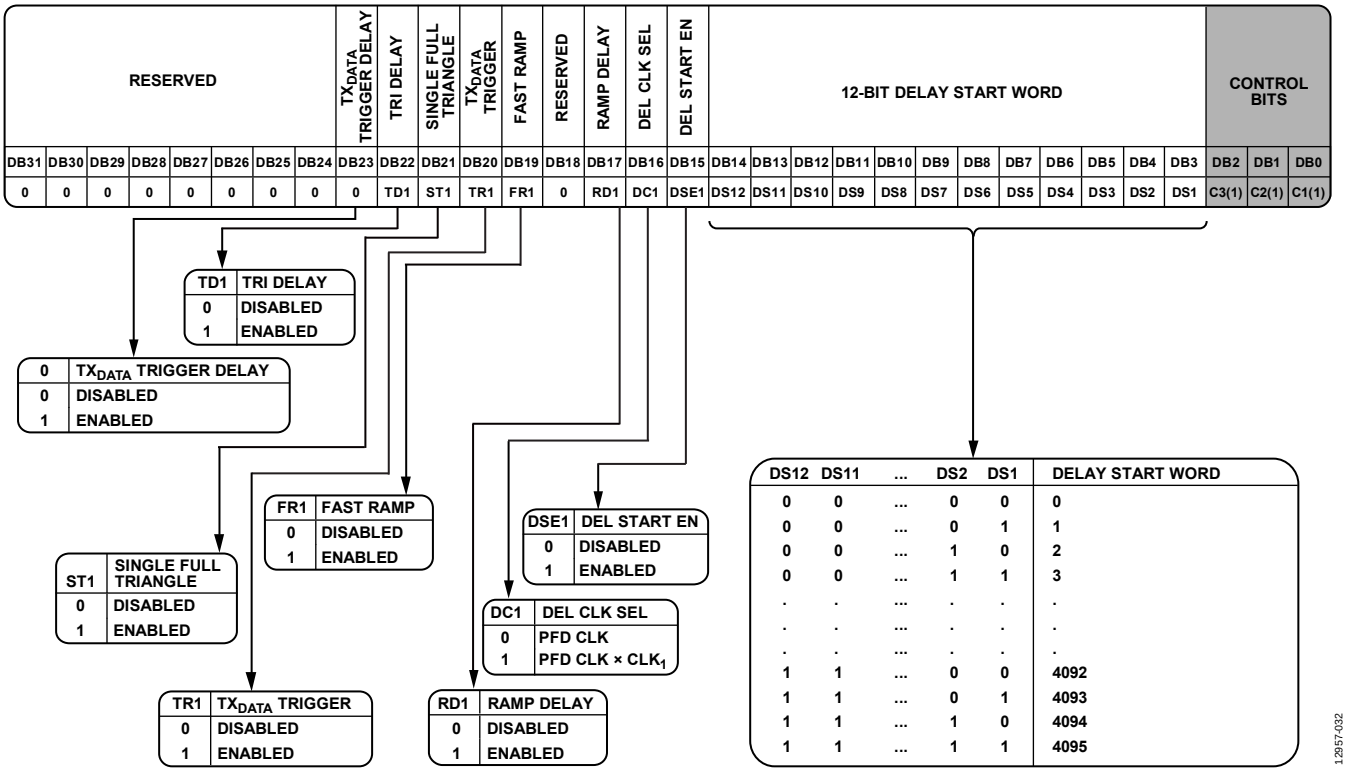

Figure 32. Delay Register (R7) Map

APPLICATIONS INFORMATION

INITIALIZATION SEQUENCE

After powering up the ADF4169, initialize the device by programming the registers in the following sequence:

1. Delay register (R7).
2. Step register (R6). Load the step register twice, first with STEP SEL = 0 and then with STEP SEL = 1.
3. Deviation register (R5). Load the deviation register twice, first with DEV SEL = 0 and then with DEV SEL = 1.
4. Clock register (R4). Load the clock register twice, first with CLK DIV SEL = 0 and then with CLK DIV SEL = 1.
5. Function register (R3).
6. R divider register (R2).
7. LSB FRAC register (R1).
8. FRAC/INT register (R0).

RF SYNTHESIZER WORKED EXAMPLE

The following equation governs how the synthesizer must be programmed.

$$RF_{OUT} = (INT + (FRAC/2^{25})) \times f_{PFD} \quad (4)$$

where:
RF_{OUT} is the RF frequency output.
INT is the integer division factor.
$FRAC$ is the fractionality.

The PFD frequency (f_{PFD}) equation is

$$f_{PFD} = REF_{IN} \times ((1 + D)/(R \times (1 + T))) \quad (5)$$

where:
REF_{IN} is the reference frequency input.
D is the RF REF_{IN} doubler bit, Bit DB20 in Register R2 (0 or 1).
R is the RF reference division factor (1 to 32).
T is the reference divide by 2 bit, Bit DB21 in Register R2 (0 or 1).

For example, in a system where a 12.102 GHz RF frequency output (RF_{OUT}) is required and a 100 MHz reference frequency input (REF_{IN}) is available, the frequency resolution is

$$f_{RES} = REF_{IN}/2^{25} \quad (6)$$

$$f_{RES} = 100\ MHz/2^{25} = 2.98\ Hz$$

From Equation 5,

$$f_{PFD} = (100\ MHz \times (1 + 0)/1) = 100\ MHz$$
$$12.102\ GHz = 100\ MHz \times (N + FRAC/2^{25})$$

Calculating the N and FRAC values,

$$N = \text{int}(RF_{OUT}/f_{PFD}) = 121$$
$$FRAC = F_{MSB} \times 2^{13} + F_{LSB}$$
$$F_{MSB} = \text{int}(((RF_{OUT}/f_{PFD}) - N) \times 2^{12}) = 81$$
$$F_{LSB} = \text{int}(((((RF_{OUT}/f_{PFD}) - N) \times 2^{12}) - F_{MSB}) \times 2^{13}) = 7536$$

where:
F_{MSB} is the 12-bit MSB FRAC value in Register R0.
F_{LSB} is the 13-bit LSB FRAC value in Register R1.
int() makes an integer of the argument in parentheses.

REFERENCE DOUBLER

The on-chip reference doubler allows the input reference signal to be doubled. This doubling is useful for increasing the PFD comparison frequency. Doubling the PFD frequency usually improves the noise performance of the system by 3 dB. It is important to note that the PFD cannot be operated above 130 MHz due to a limitation in the speed of the Σ-Δ circuit of the N divider.

CYCLE SLIP REDUCTION FOR FASTER LOCK TIMES

In fast locking applications, a wide loop filter bandwidth is required for fast frequency acquisition, resulting in increased integrated phase noise and reduced spur attenuation. Using CSR, the loop bandwidth can be kept narrow to reduce integrated phase noise and to attenuate spurs, while still realizing fast lock times.

Cycle Slips

Cycle slips occur in integer-N/fractional-N synthesizers when the loop bandwidth is narrow compared with the PFD frequency. The phase error at the PFD inputs accumulates too fast for the PLL to correct, and the charge pump temporarily pumps in the wrong direction, slowing down the lock time dramatically. The ADF4169 contains a CSR circuit to extend the linear range of the PFD, allowing faster lock times without loop filter changes.

When the ADF4169 detects that a cycle slip is about to occur, it turns on an extra charge pump current cell. The extra charge pump current cell outputs a constant current to the loop filter or removes a constant current from the loop filter, depending on whether the VCO tuning voltage must increase or decrease to acquire the new frequency. The effect is that the linear range of the PFD is increased. Stability is maintained because the current is constant and is not a pulsed current.

If the phase error increases again to a point where another cycle slip is likely, the ADF4169 turns on another charge pump cell. This continues until the ADF4169 detects that the VCO frequency has exceeded the desired frequency. It then begins to turn off the extra charge pump cells one by one until they are all turned off and the frequency is settled.

Up to seven extra charge pump cells can be turned on. In most applications, seven cells is enough to eliminate cycle slips altogether, giving much faster lock times.

When Bit DB28 in the R divider register (Register R2) is set to 1, CSR is enabled. Note that a 45% to 55% duty cycle is needed on the signal at the PFD in order for CSR to operate correctly. The reference divide by 2 flip-flop can help provide a 50% duty cycle at the PFD. For example, if a 100 MHz reference frequency is available and the user wants to run the PFD at 10 MHz, setting the R divide factor to 10 results in a 10 MHz PFD signal that is not 50% duty cycle. By setting the R divide factor to 5 and enabling the reference divide by 2 bit, a 50% duty cycle 10 MHz signal can be achieved.

Note that the CSR feature can be operated only when the phase detector polarity setting is positive (Bit DB6 in Register R3 is set to 1). It cannot be used if the phase detector polarity is negative.

MODULATION

The ADF4169 can operate in frequency shift keying (FSK) or phase shift keying (PSK) mode.

Frequency Shift Keying

FSK is implemented by configuring the ADF4169 N divider for the center frequency and then toggling the TX_{DATA} pin. The deviation from the center frequency is set by

$$f_{DEV} = (f_{PFD}/2^{25}) \times (DEV \times 2^{DEV_OFFSET}) \quad (7)$$

where:
f_{PFD} is the PFD frequency.
DEV is a 16-bit word (Bits DB[18:3] in Register R5).
DEV_OFFSET is a 4-bit word (Bits DB[22:19] in Register R5).

The ADF4169 implements f_{DEV} by incrementing or decrementing the configured N divider value by $DEV \times 2^{DEV_OFFSET}$.

FSK Settings Worked Example

In this example, an FSK system operates at 5.8 GHz with a 25 MHz f_{PFD}, requiring 250 kHz deviation (f_{DEV}).

Rearrange Equation 7 as follows:

$$(DEV \times 2^{DEV_OFFSET}) = f_{DEV}/(f_{PFD}/2^{25})$$

$$(DEV \times 2^{DEV_OFFSET}) = 250\ kHz/(25\ MHz/2^{25})$$

$$(DEV \times 2^{DEV_OFFSET}) = 335{,}544.32$$

If DEV_OFFSET is set to 6,

$$DEV = 335{,}544.32/(2^6) = 5242.88 \approx 5243$$

Due to the rounding of DEV, f_{DEV} = 250.005722 kHz.

Toggling the TX_{DATA} pin causes the frequency to hop between ±250 kHz from the programmed center frequency.

Phase Shift Keying

When the ADF4169 is configured for PSK mode, the output phase of the ADF4169 is equal to

$$(Phase\ Value \times 360°)/2^{12}$$

The phase value is set in Register 1, Bits DB[14:3]. The PSK modulation is controlled by the TX_{DATA} pin.

For example, if the phase value is 1024, a logic high on the TX_{DATA} pin results in a 90° increase of the output phase. A logic low on the TX_{DATA} pin results in a 90° decrease of the output phase. The polarity can be inverted by negating the phase value.

WAVEFORM GENERATION

The ADF4169 is capable of generating five types of waveforms in the frequency domain: single ramp burst, single triangular burst, single sawtooth burst, continuous sawtooth ramp, and continuous triangular ramp. Figure 33 through Figure 37 show the types of waveforms available.

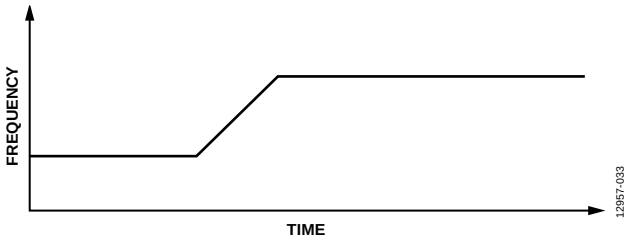

Figure 33. Single Ramp Burst

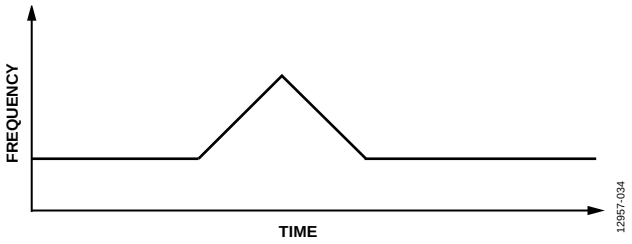

Figure 34. Single Triangular Burst

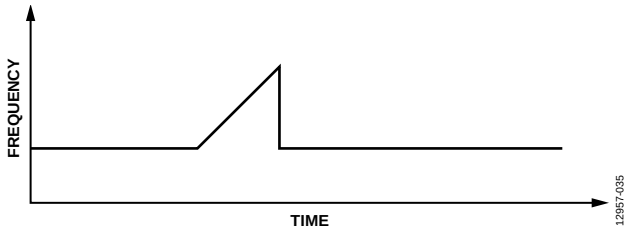

Figure 35. Single Sawtooth Burst

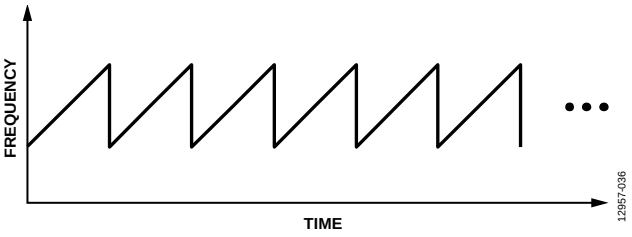

Figure 36. Continuous Sawtooth Ramp

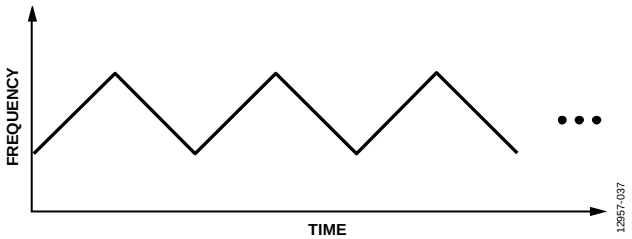

Figure 37. Continuous Triangular Ramp

WAVEFORM DEVIATIONS AND TIMING

Figure 38 shows a version of a ramp.

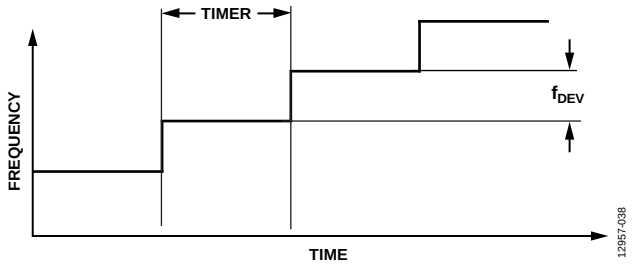

Figure 38. Waveform Timing

The key parameters that define a ramp are

- Frequency deviation
- Timeout interval
- Number of steps

Frequency Deviation

The frequency deviation for each frequency hop is set by

$$f_{DEV} = (f_{PFD}/2^{25}) \times (DEV \times 2^{DEV_OFFSET}) \quad (8)$$

where:
f_{PFD} is the PFD frequency.
DEV is a 16-bit word (Bits DB[18:3] in Register R5).
DEV_OFFSET is a 4-bit word (Bits DB[22:19] in Register R5).

Timeout Interval

The time between each frequency hop is set by

$$Time = CLK_1 \times CLK_2 \times (1/f_{PFD}) \quad (9)$$

where:
CLK_1 and CLK_2 are the 12-bit clock values (12-bit CLK_1 divider in Register R2 and 12-bit CLK_2 divider in Register R4). Bits DB[20:19] in Register R4 must be set to 11 for ramp divider mode.
f_{PFD} is the PFD frequency.

Number of Steps

A 20-bit step word value (Bits DB[22:3] in Register R6) defines the number of frequency hops that occur. The INT value cannot be incremented by more than $2^8 = 256$ from its starting value.

SINGLE RAMP BURST

The most basic waveform is the single ramp burst (see Figure 33). All other waveforms are variations of this waveform. In the single ramp burst, the ADF4169 is locked to the frequency defined in the FRAC/INT register (R0). When the ramp mode is enabled, the ADF4169 increments the N divider value by DEV × 2^{DEV_OFFSET}, causing a frequency shift, f_{DEV}, on each timer interval. This shift is repeated until the set number of steps has occured. The ADF4169 then retains the final N divider value.

SINGLE TRIANGULAR BURST

The single triangular burst is similar to the single ramp burst (see Figure 34). However, when the steps are complete, the ADF4169 begins to decrement the N divider value by DEV × 2^{DEV_OFFSET} on each timeout interval.

SINGLE SAWTOOTH BURST

In the single sawtooth burst, the N divider value is reset to its initial value on the next timeout interval after the number of steps occured (see Figure 35). The ADF4169 retains this N divider value.

CONTINUOUS SAWTOOTH RAMP

The sawtooth ramp is a repeated version of the single sawtooth burst (see Figure 36). The waveform is repeated until the ramp is disabled.

CONTINUOUS TRIANGULAR RAMP

The triangular ramp is a repeated version of the single triangular burst (see Figure 37). However, when the steps are complete, the ADF4169 begins to decrement the N divider value by DEV × 2^{DEV_OFFSET} on each timeout interval. When the number of steps has again been completed, the device reverts to incrementing the N divider value. Repeating this pattern creates a triangular waveform. The waveform is repeated until the ramp is disabled.

FMCW RADAR RAMP SETTINGS WORKED EXAMPLE

This example describes a frequency modulated continuous wave (FMCW) radar system that requires the RF local oscillator (LO) to use a sawtooth ramp over a 50 MHz range every 2 ms. The PFD frequency is 25 MHz, and the RF output range is 5800 MHz to 5850 MHz.

The frequency deviation for each hop in the ramp is set to ~250 kHz.

The frequency resolution of the ADF4169 is calculated as follows:

$$f_{RES} = f_{PFD}/2^{25} \quad (10)$$

Using Equation 10, f_{RES} is calculated as follows:

$$f_{RES} = 25\ MHz/2^{25} = 0.745\ Hz$$

DEV_OFFSET is calculated after rearranging Equation 7.

$$DEV_OFFSET = \log_2(f_{DEV}/(f_{RES} \times DEV_{MAX})) \quad (11)$$

Expressed in $\log_{10}(x)$, Equation 11 can be rearranged into the following equation:

$$DEV_OFFSET = \log_{10}(f_{DEV}/(f_{RES} \times DEV_{MAX}))/\log_{10}(2) \quad (12)$$

where:
DEV_OFFSET is a 4-bit word.
f_{DEV} is the frequency deviation.
$DEV_{MAX} = 2^{15}$ (maximum value of the deviation word).

Using Equation 12, DEV_OFFSET is calculated as follows:

$$DEV_OFFSET = \log_{10}(250\ kHz/(0.745\ Hz \times 2^{15}))/\log_{10}(2) = 3.356$$

After rounding, DEV_OFFSET = 4.

From DEV_OFFSET, the resolution of the frequency deviation can be calculated as follows:

$$f_{DEV_RES} = f_{RES} \times 2^{DEV_OFFSET} \quad (13)$$

$$f_{DEV_RES} = 0.745 \text{ Hz} \times 2^4 = 11.92 \text{ Hz}$$

To calculate the DEV word, use Equation 14.

$$DEV = f_{DEV}/(f_{RES} \times 2^{DEV_OFFSET}) \quad (14)$$

$$DEV = \frac{250 \text{ kHz}}{\frac{25 \text{ MHz}}{2^{25}} \times 2^4} = 20{,}971.52$$

Rounding this value to 20,972 and recalculating using Equation 7 to obtain the actual deviation frequency, f_{DEV}, thus produces the following:

$$f_{DEV} = (25 \text{ MHz}/2^{25}) \times (20{,}972 \times 2^4) = 250.006 \text{ kHz}$$

The number of f_{DEV} steps required to cover the 50 MHz range is 50 MHz/250.006 kHz = 200. To cover the 50 MHz range in 2 ms, the ADF4169 must hop every 2 ms/200 = 10 µs.

Rearrange Equation 9 to set the timer value (and set CLK_2 to 1):

$$CLK_1 = Timer \times f_{PFD}/CLK_2 = 10 \text{ µs} \times 25 \text{ MHz}/1 = 250$$

To summarize the settings,

- DEV = 20,972
- Number of steps = 200
- CLK_1 = 250
- CLK_2 = 1 (Bits DB[20:19] = 11, ramp divider, in Register R4)

Using these settings, program the ADF4169 to a center frequency of 5800 MHz and enable the sawtooth ramp to produce the required waveform. If a triangular ramp is used with the same settings, the ADF4169 sweeps from 5800 MHz to 5850 MHz and back down again, taking 4 ms for the entire sweep.

ACTIVATING THE RAMP

After setting all required parameters, the ramp must be activated by choosing the desired type of ramp (Bits DB[11:10] in Register R3) and starting the ramp (Bit DB31 = 1 in Register R0).

Ramp Programming Sequence

The setting of parameters described in the FMCW Radar Ramp Settings Worked Example section and the activation of the ramp described in the Activating the Ramp section must be completed in the following register write order:

1. Delay register (R7)
2. Step register (R6)
3. Deviation register (R5)
4. Clock register (R4)
5. Function register (R3)
6. R divider register (R2)
7. LSB FRAC register (R1)
8. FRAC/INT register (R0)

OTHER WAVEFORMS

Dual Ramps with Different Ramp Rates

The ADF4169 can be configured for two ramps with different step and deviation settings. It also allows the ramp rate to be reprogrammed while another ramp is running.

Example

In this example, the PLL is locked to 5790 MHz and f_{PFD} = 25 MHz. Two ramps are configured, as follows:

- Ramp 1 jumps 100 steps; each step lasts 10 µs and has a frequency deviation of 100 kHz.
- Ramp 2 jumps 80 steps; each step lasts 10 µs and has a frequency deviation of 125 kHz.

To enable the two ramp rates, follow these steps:

1. Activate the dual ramp rates mode by setting Bit DB24 in Register R5 to 1.
2. Program the ramp rate for Ramp 1 by setting the following values:
   - Register R5: set Bit DB23 = 0, Bits DB[18:3] = 16,777, and Bits DB[22:19] = 3
   - Register R6: set Bit DB23 = 0 and Bits DB[22:3] = 100
3. Program the ramp rate for Ramp 2 by setting the following values:
   - Register R5: set Bit DB23 = 1, Bits DB[18:3] = 20,972, and Bits DB[22:19] = 3
   - Register R6: set Bit DB23 = 1 and Bits DB[22:3] = 80

Figure 39 shows the resulting ramp with two ramp rates. To activate the ramp, see the Activating the Ramp section.

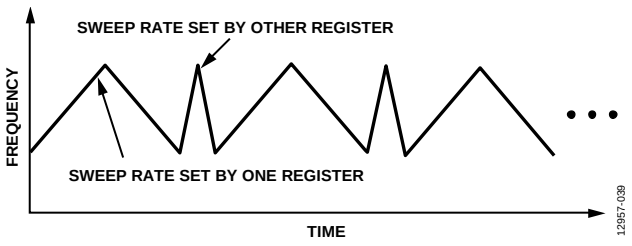

Figure 39. Dual Ramp with Two Ramp Rates

Ramp Mode with Superimposed FSK Signal

In traditional approaches, FMCW radars use either linear frequency modulation (LFM) or FSK modulation. Used separately, these modulations introduce ambiguity between measured distance and velocity, especially in multitarget situations. To overcome this issue and enable unambiguous (distance and velocity) multitarget detection, use a ramp with FSK superimposed on it.

Example

In this example, the PLL is locked to 5790 MHz and f_{PFD} = 25 MHz. The ramp with superimposed FSK is configured as follows:

- The number of steps is set to 100; each step lasts 10 µs and has a deviation of 100 kHz.
- The FSK signal is 25 kHz.

To enable ramp mode with FSK superimposed on it, follow these steps:

1. Set Bit DB23 in Register R5 and Bit DB23 in Register R6 to 0.
2. Program the ramp as described in the FMCW Radar Ramp Settings Worked Example section.
3. Program FSK on the ramp to 25 kHz by setting the bits in Register R5 as follows:
    - Bits DB[18:3] = 4194 (deviation word)
    - Bits DB[22:19] = 3 (deviation offset word)
    - Bits DB23 = 1 (deviation word for FSK on the ramp)
    - Bit DB25 = 1 (ramp with FSK enabled)

Figure 40 shows an example of a ramp with FSK superimposed on it. To activate the ramp, see the Activating the Ramp section.

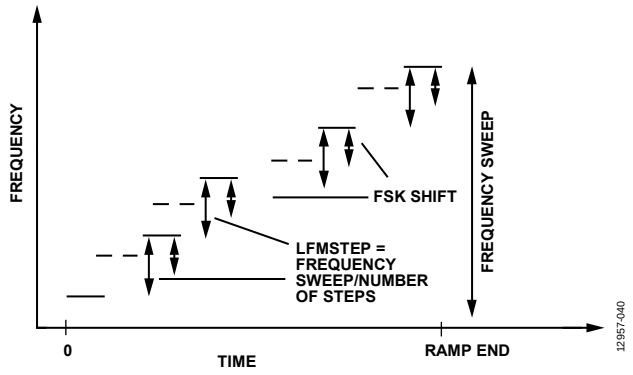

Figure 40. Combined FSK and LFM Waveform

Delayed Start

A delayed start can be used with two different devices to control the start time. Figure 41 shows the theory of delayed start.

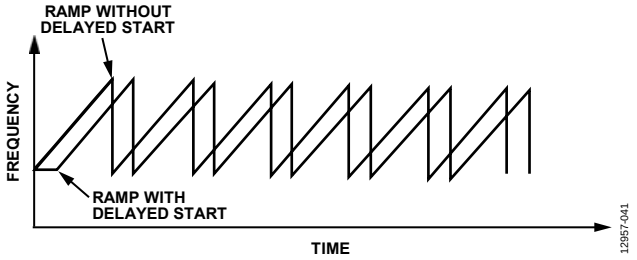

Figure 41. Delayed Start of Sawtooth Ramp

Example

For example, to program a delayed start with two different devices to control the start time, follow these steps:

1. Enable the delayed start of ramp option by setting Bit DB15 in Register R7 to 1.
2. Delay the ramp on the first part by 5 µs by setting Bit DB16 in Register R7 to 0 and setting the 12-bit delay start word (Bits DB[14:3] in Register R7) to 125 (f_{PFD} = 25 MHz). The delay is calculated as follows:

    $Delay = t_{PFD} \times Delay\ Start\ Word$
    $Delay$ = 40 ns × 125 = 5 µs
3. Delay the ramp on the second part by 125 µs by setting Bit DB16 in Register R7 to 1 and setting the 12-bit delay start word (Bits DB[14:3] in Register R7) to 125. The delay is calculated as follows:

    $Delay = t_{PFD} \times CLK_1 \times Delay\ Start\ Word$
    $Delay$ = 40 ns × 25 × 125 = 125 µs

To activate the ramp, see the Activating the Ramp section.

Delay Between Ramps

The ADF4169 can be configured to add a delay between bursts in ramps. Figure 42, Figure 43, and Figure 44 show a delay between ramps in sawtooth, triangular, and clipped triangular mode, respectively.

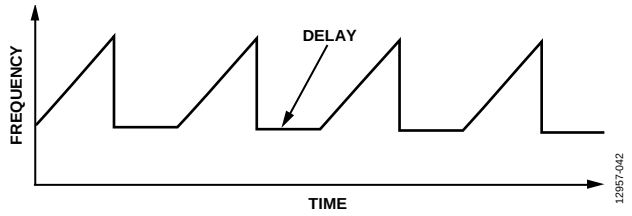

Figure 42. Delay Between Ramps for Sawtooth Mode

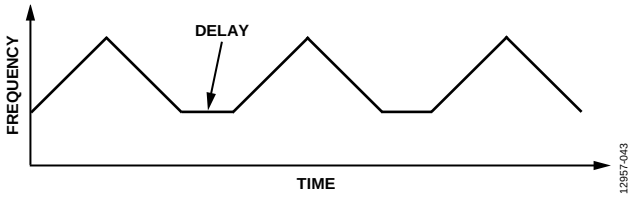

Figure 43. Delay Between Ramps for Triangular Mode

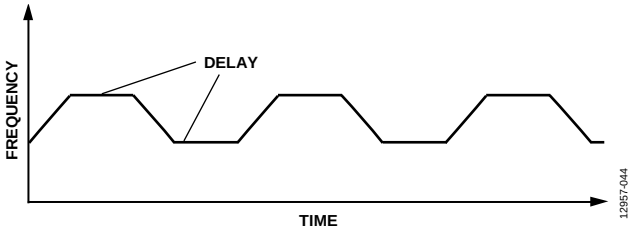

Figure 44. Delay Between Ramps for Clipped Triangular Mode

Example

For example, to add a delay between bursts in a ramp, follow these steps:

1. Enable the delay between ramps option by setting Bit DB17 in Register R7 to 1.
2. Delay the ramp by 5 µs by setting Bit DB16 in Register R7 to 0 and setting the 12-bit delay start word (Bits DB[14:3] in Register R7) to 125 (f_{PFD} = 25 MHz). The delay is calculated as follows:

$$Delay = t_{PFD} \times Delay\ Start\ Word$$
$$Delay = 40\ ns \times 125 = 5\ \mu s$$

If a longer delay is needed, for example, 125 µs, set Bit DB16 in Register R7 to 1, and set the 12-bit delay start word (Bits DB[14:3] in Register R7) to 125. The delay is calculated as follows:

$$Delay = t_{PFD} \times CLK_1 \times Delay\ Start\ Word$$

$$Delay = 40\ ns \times 25 \times 125 = 125\ \mu s$$

It is also possible to activate fast lock operation for the first period of delay by setting Bit DB18 in Register R7 to 1. This feature is useful for sawtooth ramps to mitigate the frequency overshoot on the transition from one sawtooth to the next.

To activate the ramp, see the Activating the Ramp section.

Dual Ramp Rates Mode with Delay

This mode combines the modes described in the Dual Ramps with Different Ramp Rates section and the Delay Between Ramps section (see Figure 45).

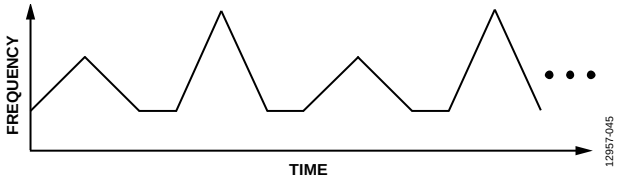

Figure 45. Dual Ramp Rates Mode with Delay

To enable this configuration,

1. Program the two ramp rates mode as described in the Dual Ramps with Different Ramp Rates section.
2. Program the delay as described in the Delay Between Ramps section.

Fast Ramp Mode

The ADF4169 is capable of generating a fast ramp. The fast ramp is a triangular ramp with two different slopes (see Figure 46). The number of steps, time per step, and deviation per step are programmable for both the up and down ramps.

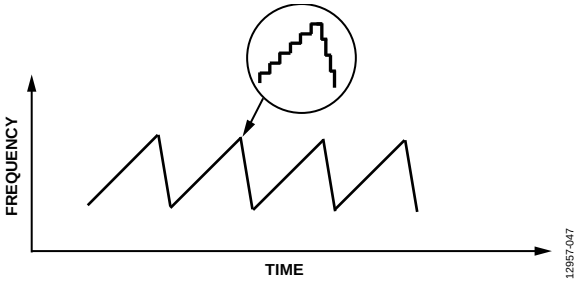

Figure 46. Fast Ramp Mode

To activate the fast ramp waveform, follow these steps:

1. Select the continuous triangular waveform by setting Bits DB[11:10] in Register R3 to 01.
2. Enable the fast ramp by setting Bit DB19 in Register R7 to 1.
3. Program the up ramp as follows:
   - Set Bit DB6 in Register R4 (CLK DIV SEL), Bit DB23 in Register R5 (DEV SEL), and Bit DB23 in Register R6 (STEP SEL) to 0 for Ramp 1.
   - Calculate and program the timer, DEV, DEV_OFFSET, and the step word as described in the FMCW Radar Ramp Settings Worked Example section.

4. Program the down ramp as follows.
    - Set Bit DB6 in Register R4 (CLK DIV SEL), Bit DB23 in Register R5 (DEV SEL), and Bit DB23 in Register R6 (STEP SEL) to 1 for Ramp 2.
    - Calculate and program the timer, DEV, DEV_OFFSET, and the step word as described in the FMCW Radar Ramp Settings Worked Example section.
5. Start the ramp by setting Bit DB31 = 1 in Register R0.

Note that the total frequency change of the up and down ramps must be equal for stability.

RAMP COMPLETE SIGNAL TO MUXOUT

Figure 47 shows the ramp complete signal on MUXOUT.

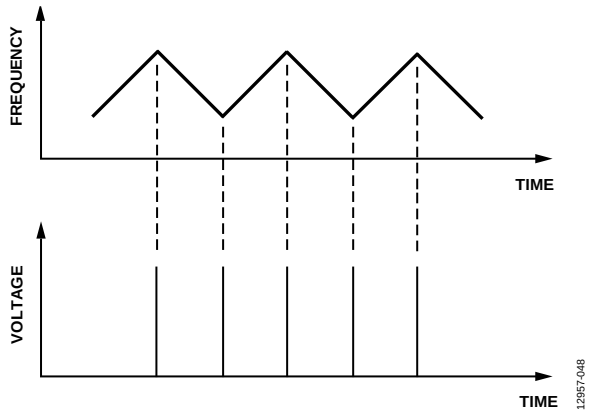

Figure 47. Ramp Complete Signal on MUXOUT

To activate the ramp complete signal on MUXOUT, set Bits DB[30:27] in Register R0 to 1111, and set Bits DB[25:21] in Register R4 to 00011.

EXTERNAL CONTROL OF RAMP STEPS

The internal ramp clock can be bypassed and a pulse on the TX_{DATA} pin can trigger each step, which allows more transparent control of each step. Enable this feature by setting Bit DB29 in Register R5 to 1 (see Figure 48).

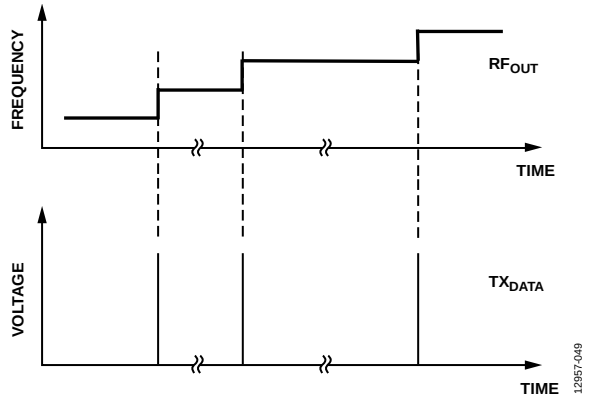

Figure 48. External Control of Ramp Steps

INTERRUPT MODES AND FREQUENCY READBACK

Interrupt modes are triggered from the rising edge of TX_{DATA}. To activate this function, set Bits DB[30:27] in Register R0 to 1111, and set Bits DB[25:21] in Register R4 to 00010 to enable readback to MUXOUT. To select and enable the interrupt mode, set Bits DB[27:26] in Register R5 as shown in Table 8. A ramp must be active for readback to work.

Table 8. Interrupt Modes (Register R5)

Bits DB[27:26]	Interrupt Mode
00	Interrupt is off
01	Interrupt on TX_{DATA}, load channel sweep continues
11	Interrupt on TX_{DATA}, load channel sweep stops

Figure 49 shows the theory of interrupt and frequency readback.

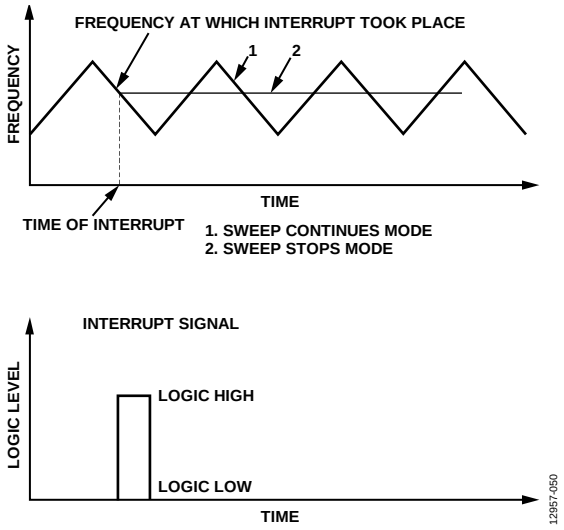

Figure 49. Interrupt and Frequency Readback

When an interrupt occurs, the data, consisting of the INT and FRAC values, can be read back via MUXOUT. The data comprises 37 bits: 12 bits represent the INT value and 25 bits represent the FRAC value. Figure 50 shows how single bits are read back.

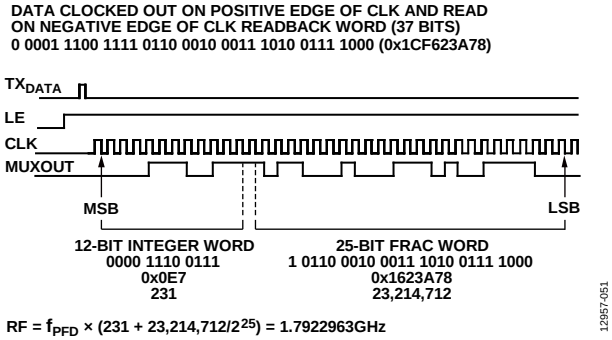

Figure 50. Reading Back Single Bits to Determine the Output Frequency at the Moment of Interrupt

For continuous frequency readback, the following sequence must be used (see Figure 51).

1. Register R0 write
2. LE high
3. Pulse on TX_{DATA}
4. Frequency readback
5. Pulse on TX_{DATA}
6. Register R4 write
7. Frequency readback
8. Pulse on TX_{DATA}

Figure 51 shows the continuous frequency readback sequence.

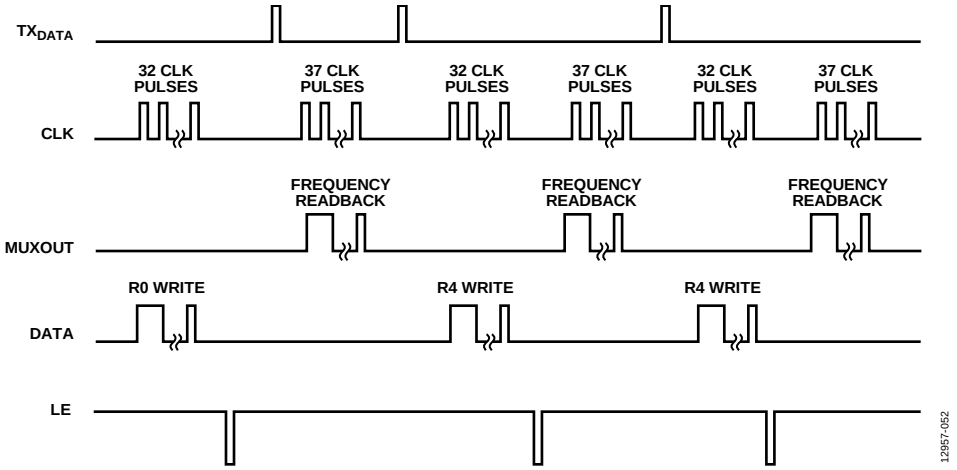

Figure 51. Continuous Frequency Readback

FAST LOCK MODE

The ADF4169 can operate in fast lock mode. In this mode, the charge pump current is boosted and additional resistors are connected to maintain the stability of the loop.

Fast Lock Timer and Register Sequences

When fast lock mode is enabled (Register R4, Bits DB[20:19]), after a write to Register R0, the PLL operates in a wide bandwidth mode for a selected amount of time. Before fast lock is enabled, the initialization sequence must be performed after the device is first powered up (see the Initialization Sequence section). The time in bandwidth mode is set by:

$$CLK_1 \times CLK_2/f_{PFD} = Time\ in\ Wide\ Bandwidth$$

where:

CLK_1 = Register R2, Bits DB[14:3].
CLK_2 = Register R4, Bits DB[18:7].
f_{PFD} = the PFD frequency.

Note that the fast lock feature does not work in ramp mode.

Fast Lock Example

In this example, the PLL has f_{PFD} of 100 MHz and requires being in wide bandwidth mode for 12 µs.

$$CLK_1 \times CLK_2/f_{PFD} = 12\ \mu s$$

$$CLK_1 \times CLK_2 = (12 \times 10^{-6}) \times (100 \times 10^{6}) = 1200$$

Therefore, CLK_1 = 12 and CLK_2 = 100, which results in 12 µs.

Fast Lock Loop Filter Topology

To use fast lock mode, an extra connection from the PLL to the loop filter is needed. The damping resistor in the loop filter must be reduced to ¼ of its value in wide bandwidth mode. This reduction is required because the charge pump current is increased by 16 in wide bandwidth mode, and stability must be ensured.

To further enhance stability and mitigate frequency overshoot during a frequency change in wide bandwidth mode, Resistor R3 is connected (see Figure 52). During fast lock, the SW1 pin is shorted to ground, and the SW2 pin is connected to CP (set Bits DB[20:19] in Register R4 to 01 for fast lock divider mode).

The following two topologies can be used:

- Divide the damping resistor (R1) into two values (R1 and R1A) that have a ratio of 1:3 (see Figure 52).
- Connect an extra resistor (R1A) directly from SW1 (see Figure 53). The extra resistor must be selected such that the parallel combination of an extra resistor and the damping resistor (R1) is reduced to ¼ of the original value of R1.

For both topologies, the ratio R3:R2 must equal 1:4.

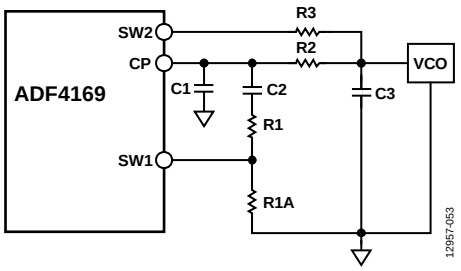

Figure 52. Fast Lock Loop Filter Topology 1

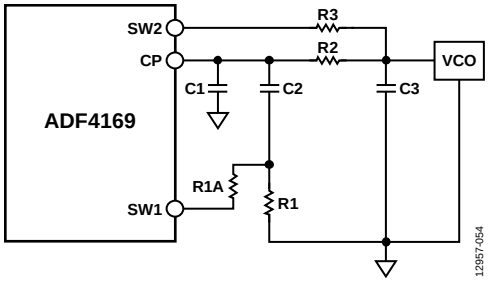

Figure 53. Fast Lock Loop Filter Topology 2

For more fast lock topologies, see the ADIsimPLL.

SPUR MECHANISMS

The fractional interpolator in the ADF4169 is a third-order Σ-Δ modulator with a 25-bit fixed modulus (MOD). The Σ-Δ modulator is clocked at the PFD frequency (f_{PFD}), which allows PLL output frequencies to be synthesized at a channel step resolution of f_{PFD}/CLK_1. This section describes the various spur mechanisms that are possible with fractional-N synthesizers and how they affect the ADF4169.

Fractional Spurs

In most fractional synthesizers, fractional spurs can appear at the set channel spacing of the synthesizer. In the ADF4169, these spurs do not appear. The high value of the fixed modulus in the ADF4169 makes the Σ-Δ modulator quantization error spectrum look like broadband noise, effectively spreading the fractional spurs into noise.

Integer Boundary Spurs

Interactions between the RF VCO frequency and the PFD frequency can lead to spurs known as integer boundary spurs. When these frequencies are not integer related (which is the purpose of a fractional-N synthesizer), spur sidebands appear on the VCO output spectrum at an offset frequency that corresponds to the beat note, or difference frequency, between an integer multiple of the PFD and the VCO frequency.

These spurs are called integer boundary spurs because they are more noticeable on channels close to integer multiples of the PFD, where the difference frequency can be inside the loop bandwidth. These spurs are attenuated by the loop filter on channels far from integer multiples of the PFD.

Reference Spurs

Reference spurs are generally not a problem in fractional-N synthesizers because the reference offset is far outside the loop bandwidth. However, any reference feedthrough mechanism that bypasses the loop can cause a problem. One such mechanism is the feedthrough of low levels of on-chip reference switching noise out through the $RF_{IN}x$ pins back to the VCO, resulting in reference spur levels as high as −90 dBc. Take care in the printed circuit board (PCB) layout to ensure that the VCO is well separated from the input reference to avoid a possible feedthrough path on the board.

Low Frequency Applications

The specification of the RF input is 0.5 GHz minimum; however, RF frequencies lower than 0.5 GHz can be used if the minimum slew rate specification of 400 V/µs is met. An appropriate driver, for example, the ADCMP553, can accelerate the edge transitions of the RF signal before it is fed back to the ADF4169 RF input.

FILTER DESIGN USING ADIsimPLL

A filter design and analysis program is available to help the user implement PLL design. Visit www.analog.com/ADIsimPLL to download the free ADIsimPLL software. This software designs, simulates, and analyzes the entire PLL frequency domain and time domain response. Various passive and active filter architectures are allowed.

PCB DESIGN GUIDELINES FOR THE CHIP SCALE PACKAGE

The lands on the chip scale package (CP-24-10) are rectangular. The PCB pad for these lands must be 0.1 mm longer than the package land length and 0.05 mm wider than the package land width. Center the land on the pad to ensure that the solder joint size is maximized.

The bottom of the chip scale package has a central exposed thermal pad. The thermal pad on the PCB must be at least as large as this exposed pad. On the PCB, there must be a clearance of at least 0.25 mm between the thermal pad and the inner edges of the pad pattern to ensure that shorting is avoided.

Thermal vias can be used on the PCB thermal pad to improve the thermal performance of the package. If vias are used, incorporate them into the thermal pad at the 1.2 mm pitch grid. The via diameter must be between 0.3 mm and 0.33 mm, and the via barrel must be plated with 1 ounce of copper to plug the via. Connect the PCB thermal pad to AGND.

APPLICATION OF THE ADF4169 IN FMCW RADAR

Figure 54 shows the application of the ADF4169 in a frequency modulated continuous wave (FMCW) radar system. In the FMCW radar system, the ADF4169 generates the sawtooth or triangle ramps that are necessary for this type of radar to operate.

Traditionally, the PLL is driven directly by a direct digital synthesizer (DDS) to generate the required type of waveform. Due to the waveform generating mechanism that is implemented on the ADF4169, a DDS is no longer needed, which reduces cost.

The PLL solution also has advantages over another method for generating FMCW ramps: a digital-to-analog converter (DAC) driving the VCO directly, this method suffers from nonlinearities of the VCO tuning characteristics, requiring compensation. The PLL method produces highly linear ramps without the need for calibration.

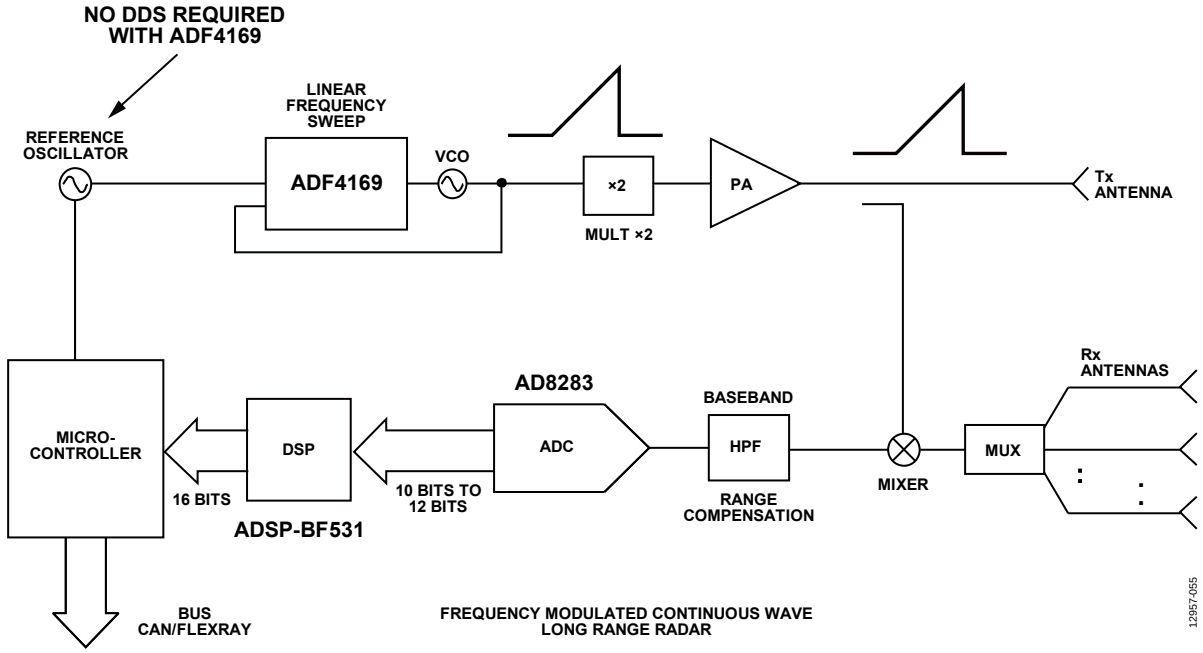

Figure 54. FMCW Radar with the ADF4169

OUTLINE DIMENSIONS

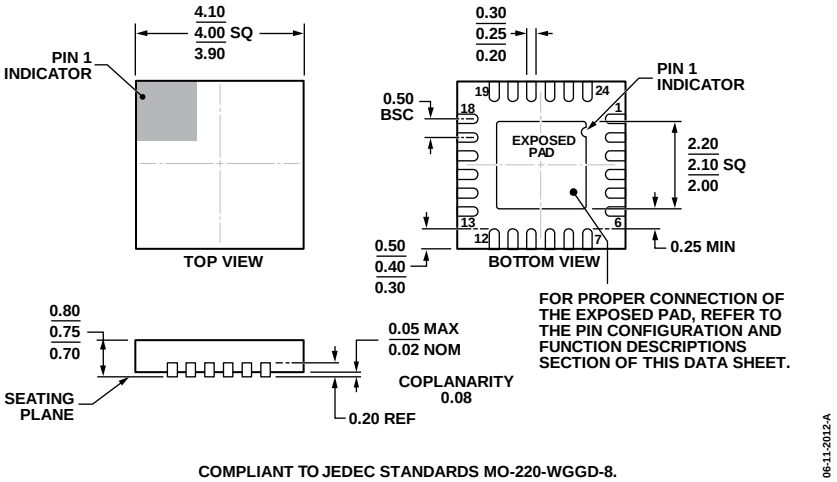

Figure 55. 24-Lead Lead Frame Chip Scale Package [LFCSP_WQ]
4 mm × 4 mm Body, Very Very Thin Quad
(CP-24-10)
Dimensions shown in millimeters

ORDERING GUIDE

Model[1, 2, 3]	Temperature Range	Package Description	Package Option
ADF4169CCPZ	−40°C to +125°C	24-Lead Lead Frame Chip Scale Package [LFCSP_WQ]	CP-24-10
ADF4169CCPZ-RL7	−40°C to +125°C	24-Lead Lead Frame Chip Scale Package [LFCSP_WQ]	CP-24-10
ADF4169WCCPZ	−40°C to +125°C	24-Lead Lead Frame Chip Scale Package [LFCSP_WQ]	CP-24-10
ADF4169WCCPZ-RL7	−40°C to +125°C	24-Lead Lead Frame Chip Scale Package [LFCSP_WQ]	CP-24-10
EV-ADF4159EB3Z		Evaluation Board (Set up for External, SMA Connected VCO Board; Filter Unpopulated)	

[1] Z = RoHS Compliant Part.
[2] W = Qualified for Automotive Applications.
[3] The EV-ADF4159EB3Z evaluation board works with the ADF4169 if modifications are made. See the UG-383 for additional information.

AUTOMOTIVE PRODUCTS

The ADF4169W models are available with controlled manufacturing to support the quality and reliability requirements of automotive applications. Note that these automotive models may have specifications that differ from the commercial models; therefore, designers should review the Specifications section of this data sheet carefully. Only the automotive grade products shown are available for use in automotive applications. Contact your local Analog Devices account representative for specific product ordering information and to obtain the specific Automotive Reliability reports for these models.

©2015 Analog Devices, Inc. All rights reserved. Trademarks and registered trademarks are the property of their respective owners.
D12957-0-7/15(0)