ADET-5000

RF Power Detector

Data Sheet

Lead (Pb) Free
RoHS 6 fully
compliant



Description

ADET-5000 is a wide bandwidth, wide dynamic range temperature-compensated diode power detector for operation from 700 MHz to 2.6 GHz. Its high sensitivity and wide bandwidth support fast inner-loop calibration and true envelope sampling of modulated signals for accurate power leveling of modulated waveforms for use in cellular handsets and data cards.

ADET-5000 features circuit technology that is aligned optimally to work with transceivers requiring external detection for inner-loop power control. Superb temperature and voltage compensation maintains inner-loop accuracy over extreme operating conditions. In power-down mode, ADET-5000 presents high output impedance to the transceiver, minimizing loading of any other detectors connected to the transceiver detector input line. This characteristic allows the customer to utilize ADET-5000 to daisy-chain numerous power amplifier couplers together with a single detector.

ADET-5000's nominal input impedance is 100 ohms, allowing the sensitivity and detection range to be trimmed externally with a shunt input resistor. This allows user-adjustability of effective coupling ratios to maximize dynamic range and to compensate variable output power targets and daisy-chain configurations. ADET-5000 is manufactured on an advanced InGaP HBT (hetero-junction Bipolar Transistor) MMIC (microwave monolithic integrated circuit) technology offering state-of-the-art reliability, temperature stability and ruggedness

Features

- Fully Temperature and Voltage Compensated Diode RF Detector
- -20 dBm to 11 dBm Power Detection Range
- Small, Thin Package (1.2 x 1.5 x 0.5 mm)
- Complete coverage of 3GPP bands from 700-2600 MHz
- Fast Response Time and Wide Bandwidth
- High Sensitivity and User-Adjustable Input Range
- High Output Impedance in Power Down Mode
- Low Harmonic Generation
- 6-pin surface mounting package
- Lead-free, RoHS compliant, Green (Halogen Free)

Applications

- CDMA/UMTS/LTE Handsets & Data Cards

Absolute Maximum Ratings

No damage assuming only one parameter is set at limit at a time with all other parameters set at or below nominal value

Operation of any single parameter outside these conditions with the remaining parameters set at or below nominal values may result in permanent damage

Description	Max.	Unit
RF Input Power (Pin)	13	dBm
DC Supply / Control Voltage (Ven)	3	V
Storage Temperature (Tstg)	-30 to +125	C

Recommended Operating Conditions

Description		Min.	Typ.	Max.	Unit
Enable Voltage (Ven	Low High	0 2.0	0.2 2.2	0.5 2.7	V
Enable Current (Ien @ Ven = 2.7 V)			800	1000	µA
Case Temperature		-30	25	85	C

Electrical Characteristics

– Conditions: Ven = 2.2 V, T = 25° C, Zload = 100 kohm in parallel with 12 pF

Characteristics	Condition	Min.	Typ.	Max.	Unit
Operating Frequency Range		700	–	2600	MHz
Power Detect Range (Pin)		-20	–	+11	dBm
Average Output Voltage	Pin = +9 dBm Pin = -11.5 dBm Pin = -12.5 dBm	0.93 0.45 0.45	1.10 0.48 0.47	1.30 0.50 0.49	V
Power Detect Slope	Pin = -12.5 dBm	4.3	5.3	9.3	mV/dB
Len (RF input = off)		150	350	1000	µA
DC Offset	Output Voltage with RF Off		450		mV
RF Input Resistance	Rext open (not connected)		100		ohms

ADET-5000 Characterization Data

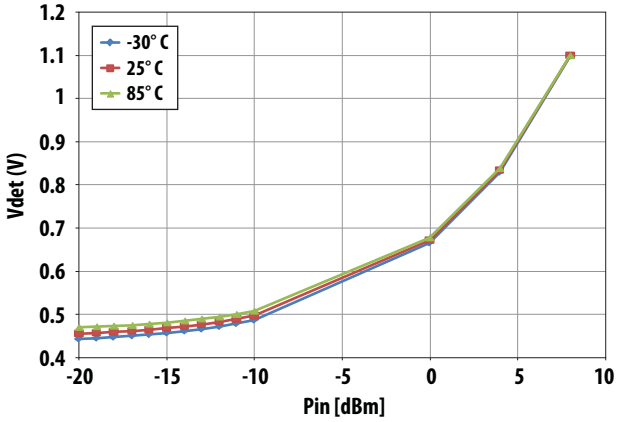

Figure 1. Detector Voltage vs. Input Power over temperature at 1900 MHz, Ven = 2.2 V

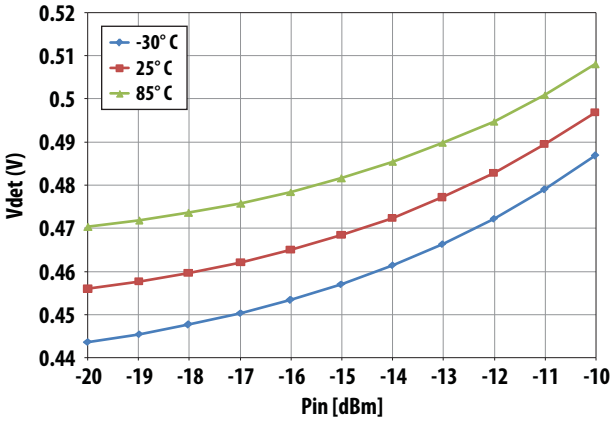

Figure 2. Detector Voltage vs. Input Power over temperature at 1900 MHz, Ven = 2.2 V

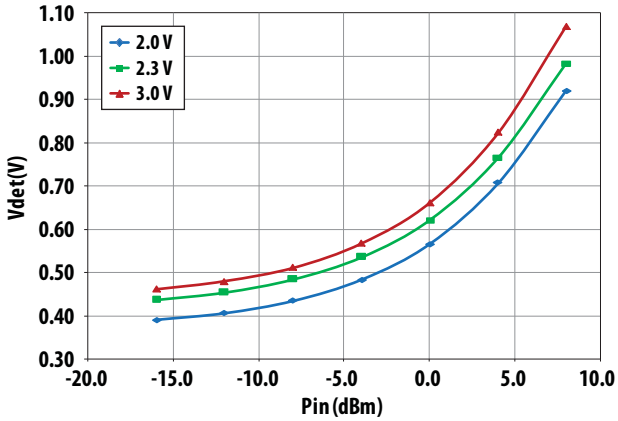

Figure 3. Detector Voltage vs. Input Power at 1900 MHz for Ven = 2.2 V – 3.0 V

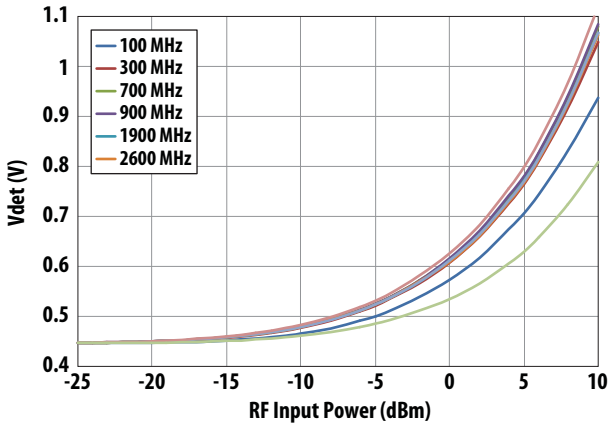

Figure 4. Detector Voltage vs. Frequency (with 100 Ohm input resistor) from -20 to -10 dBm input power.

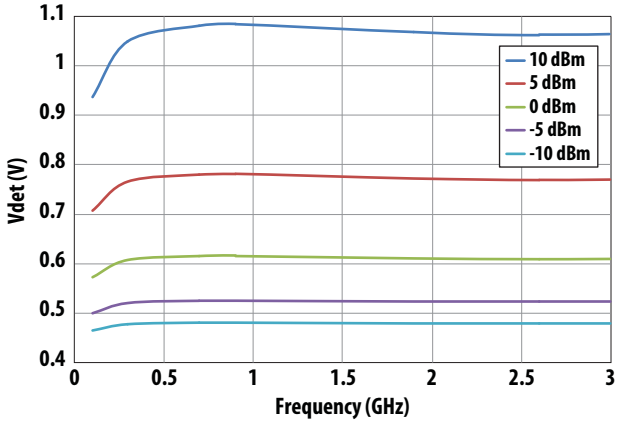

Figure 5. Detector Voltage vs. Frequency from 100-2600MHz over Input Powers, Ven = 2.2 V

Table 1. Typical RMS Error @ 25C for various modulation schemes. The reference modulation for the measurement was WCDMA Rel 99

		Typical RMS Error @ 25C (dB) vs. WCDMA Rel 99 Modulation	
Waveform	Measured CCDF (PAR) @ 0.1% Composite	Vrms for loop control voltage @ 0dBm	Vrms for loop control voltage @ 8dBm
WCDMA Rel 99	3.06	0	0
HSDPA1	3.41	0.14	0.12
HSDPA2	3.76	0.19	0.07
HSDPA3	3.86	0.2	-0.01
HSDPA3	3.96	0.11	-0.21
HSUPA Subtest 1	4.46	0	0.03
HSUPA Subtest 2	5.8	0.24	0.3
HSUPA Subtest 3	5.17	0.1	0.04
HSUPA Subtest 4	5.5	0.19	0.05
HSUPA Subtest 5	4.25	-0.02	0.3
HSUPA high PAR	6.4	0.4	0.36

Package Outline

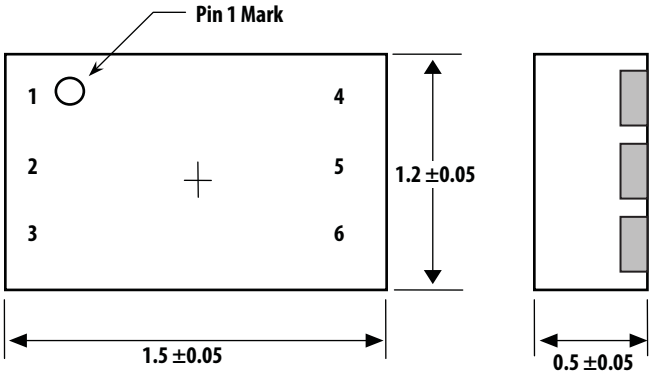

Footprint

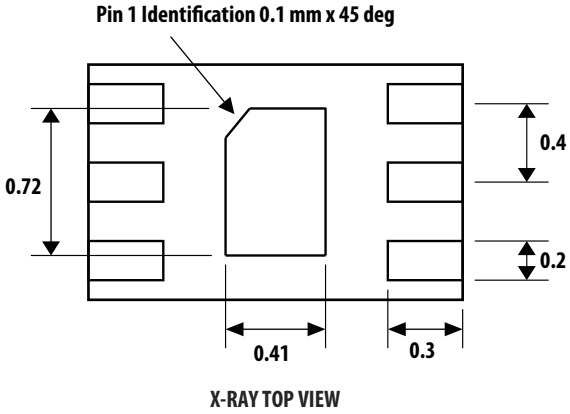

X-RAY TOP VIEW

(All dimensions are in millimeters)

PIN Description

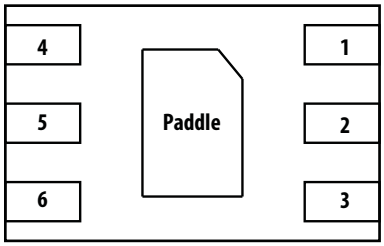

Pin	Name	Description
1	Ven	Detector Enable
2	Pin	RF Input
3	NC	Not connected
4	NC	Not connected
5	Vdet	Detected Output Voltage
6	NC	Not connected
Paddle	GND	Center Ground Paddle

Recommended PCB Layout

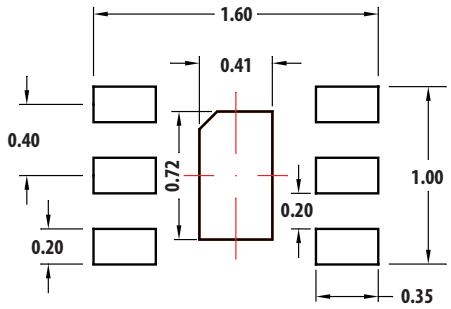

Land Pattern

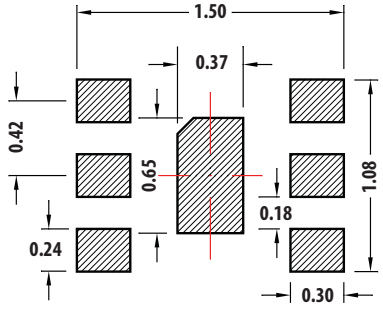

Stencil Opening

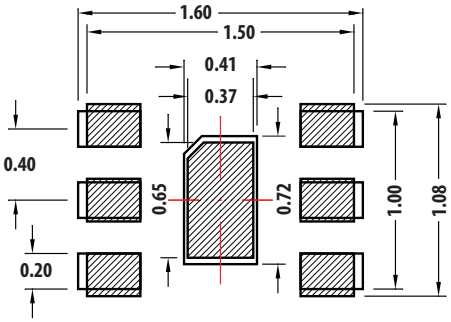

Combination of Land Pattern and Stencil Opening

Tape Dimensions

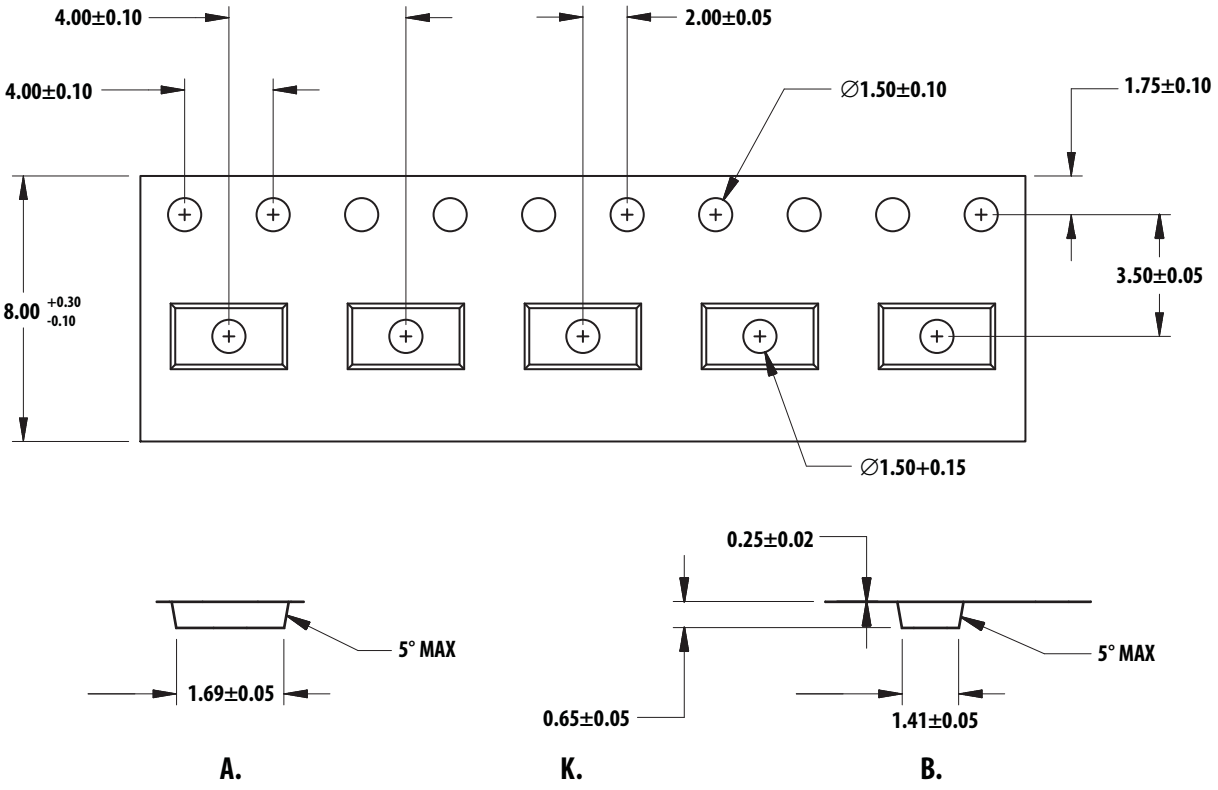

Notes:
1. Leader and Trailer – 200 empty pockets
2. Carrier tape dimension (unit in mm)

Carrier Height Information

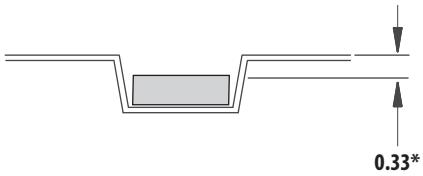

*** with assumption 0.4mm unit height and 0.73 carrier height**

Package, Reel & Tape Specifications

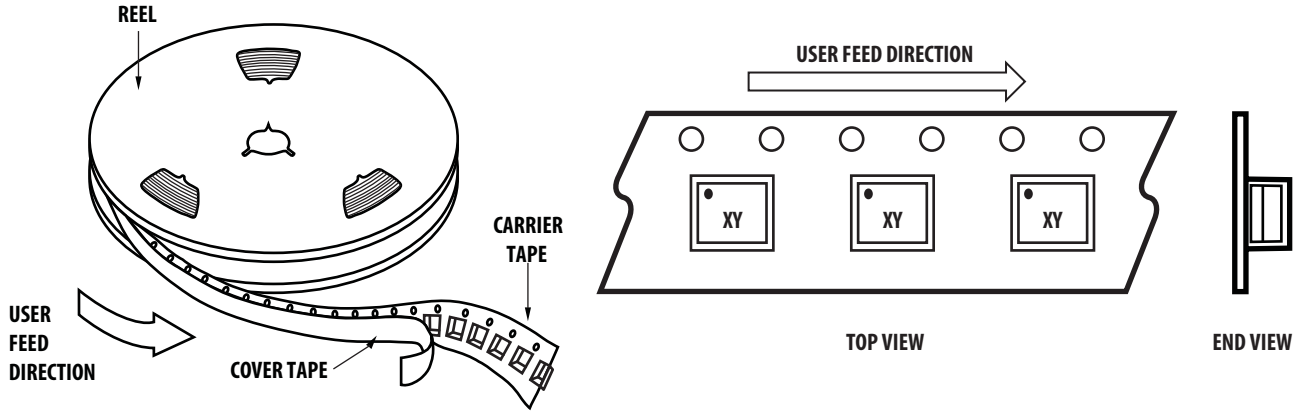

Reel Dimensions - 7 inch

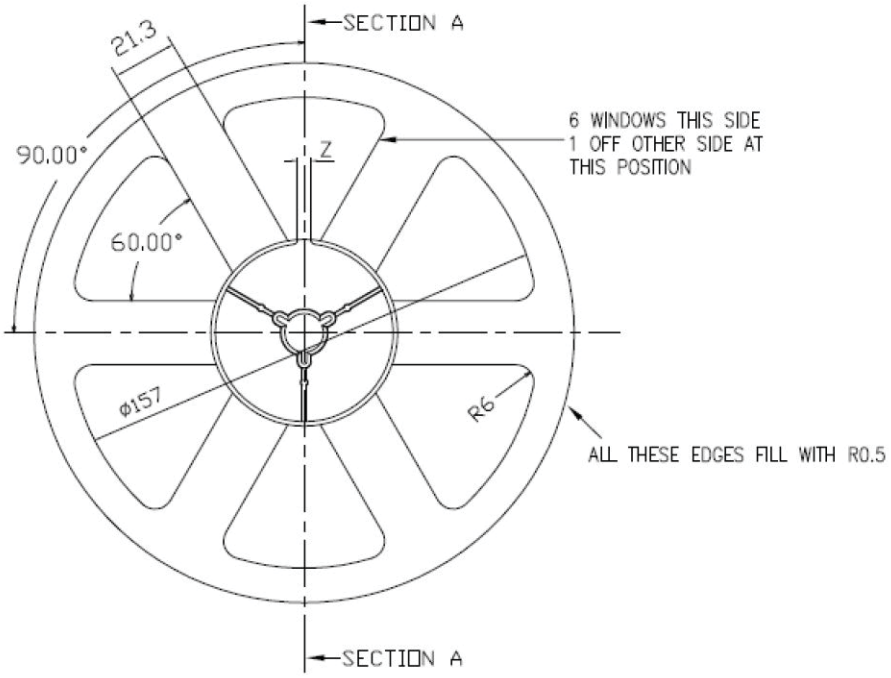

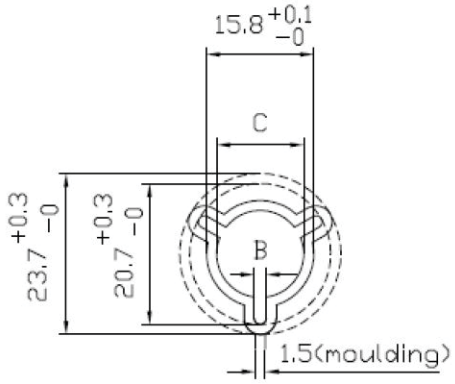

HUB DETAIL

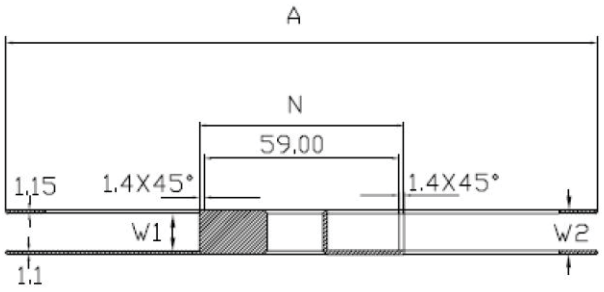

SECTION A

Ordering Information

Part Number	Number of Devices	Container
ADET-5000-TR1	3,000	178mm (7") Tape/Reel
ADET-5000-BLK	100	Antistatic Bag

For product information and a complete list of distributors, please go to our web site: **www.avagotech.com**

Avago, Avago Technologies, and the A logo are trademarks of Avago Technologies in the United States and other countries.
Data subject to change. Copyright © 2005-2012 Avago Technologies. All rights reserved.
AV02-3546EN - October 16, 2012