ADC364x 14-bit, 10-MSPS to 65-MSPS, Low-Noise, Low Power Dual Channel ADC

1 Features

- Dual channel
- 14-bit 10/25/65 MSPS ADC
- Noise floor: –155 dBFS/Hz
- Ultra-low power with optimized power scaling: 29 mW/ch (10 MSPS) to 72 mW/ch (65 MSPS)
- Latency: 1 clock cycle
- 14-Bit, no missing codes
- INL: ±0.6 LSB; DNL: ±0.2 LSB
- Reference: external or internal
- Industrial temperature range: –40°C to +105°C
- On-chip digital filter (optional)
  - Decimation by 2, 4, 8, 16, 32
  - 32-bit NCO
- DDR and Serial CMOS interface
- Small footprint: 40-VQFN (5 mm × 5 mm) package
- Single 1.8-V supply
- Spectral performance (f_{IN} = 5 MHz):
  - SNR: 79.0 dBFS
  - SFDR: 93-dBc HD2, HD3
  - SFDR: 101-dBFS worst spur
- Spectral performance (f_{IN} = 64 MHz):
  - SNR: 74.0 dBFS
  - SFDR: 84-dBc HD2, HD3
  - SFDR: 90-dBFS worst spur

2 Applications

- High-speed data acquisition
- Industrial monitoring
- Thermal imaging
- Imaging and sonar
- Software defined radio
- Power quality
- Communications infrastructure
- High-speed control loops
- Instrumentation
- Smart grids
- Spectroscopy
- Radar
- Source measurement unit (SMU)
- GPS receiver
- Sonar
- Substation automation

3 Description

The ADC364x family of devices are low-noise, ultra-low power, 14-bit, 10-MSPS to 65-MSPS dual-channel, high-speed analog-to-digital converters (ADCs). Designed for low power consumption, these devices deliver a noise spectral density of –155 dBFS/Hz, combined with excellent linearity and dynamic range. The ADC364x offers very good dc precision, together with IF sampling support, which make the device an excellent choice for a wide range of applications. High-speed control loops benefit from the short latency of only one clock cycle. The ADC consumes only 72 mW/ch at 65 MSPS, and power consumption scales well with lower sampling rates.

The ADC364x use a DDR or serial CMOS interface to output the data offering lowest power digital interface, together with flexibility to minimize the number of digital interconnects. These devices are a pin-to-pin compatible family with different speed grades. These devices support the extended industrial temperature range of –40 to +105ºC.

Device Information

PART NUMBER	PACKAGE(1)	BODY SIZE (NOM)
ADC364x	VQFN (40)	5.00 × 5.00 mm

(1) For all available packages, see the package option addendum at the end of the data sheet.

Device Comparison

PART NUMBER	RESOLUTION	SAMPLING RATE
ADC3643	14 BIT	65 MSPS
ADC3642(1)	14 BIT	25 MSPS
ADC3641(1)	14 BIT	10 MSPS

(1) Product Preview

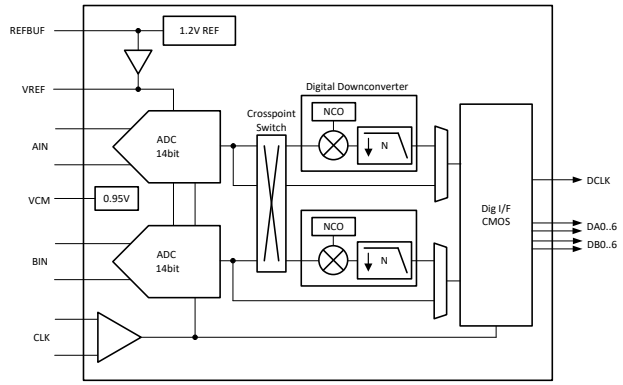

ADC364x Block Diagram

An IMPORTANT NOTICE at the end of this data sheet addresses availability, warranty, changes, use in safety-critical applications, intellectual property matters and other important disclaimers. UNLESS OTHERWISE NOTED, this document contains PRODUCTION DATA.

Table of Contents

1 Features....1
2 Applications....1
3 Description....1
4 Revision History....2
5 Pin Configuration and Functions....3
6 Specifications....5
6.1 Absolute Maximum Ratings....5
6.2 ESD Ratings....5
6.3 Recommended Operating Conditions....5
6.4 Thermal Information....5
6.5 Electrical Characteristics - Power Consumption....6
6.6 Electrical Characteristics - DC Specifications....7
6.7 Electrical Characteristics - AC Specifications ADC3641....9
6.8 Electrical Characteristics - AC Specifications ADC3642....10
6.9 Electrical Characteristics - AC Specifications ADC3643....11
6.10 Timing Requirements....12
6.11 Typical Characteristics - ADC3643....14
7 Parameter Measurement Information....19
8 Detailed Description....21
8.1 Overview....21
8.2 Functional Block Diagram....21
8.3 Feature Description....22
8.4 Device Functional Modes....42
8.5 Programming....43
8.6 Register Maps....45
9 Application and Implementation....61
9.1 Typical Application....61
10 Initialization Set Up....64
10.1 Register Initialization During Operation....64
11 Power Supply Recommendations....65
12 Layout....67
12.1 Layout Guidelines....67
12.2 Layout Example....67
13 Device and Documentation Support....68
13.1 Receiving Notification of Documentation Updates....68
13.2 Support Resources....68
13.3 Trademarks....68
13.4 Electrostatic Discharge Caution....68
13.5 Glossary....68
14 Mechanical, Packaging, and Orderable Information....68

4 Revision History

NOTE: Page numbers for previous revisions may differ from page numbers in the current version.

DATE	REVISION	NOTES
October 2020	*	Initial release.

Copyright © 2020 Texas Instruments Incorporated

5 Pin Configuration and Functions

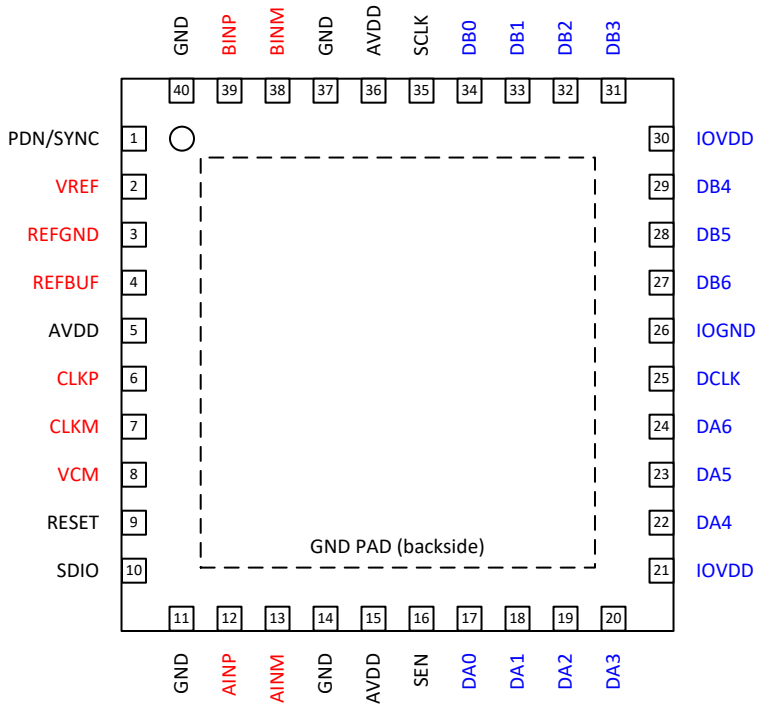

Figure 5-1. RSB Package, 40-Pin WQFN, Top View

Table 5-1. Pin Functions

PIN		I/O	DESCRIPTION
NAME	NO.		
INPUT/REFERENCE			
AINM	13	I	Negative analog input, channel A
AINP	12	I	Positive analog input, channel A
BINP	39	I	Positive analog input, channel B
BINM	38	I	Negative analog input, channel B
REFBUF	4	I	1.2V external voltage reference input for use with internal reference buffer. Internal 100 kΩ pull-up resistor to AVDD. This pin is also used to configure default operating conditions.
REFGND	3	I	Reference ground input
VCM	8	O	Common-mode voltage output for the analog inputs, 0.95V
VREF	2	I	External voltage reference input
CLOCK			
CLKM	7	I	Negative differential sampling clock input for the ADC
CLKP	6	I	Positive differential sampling clock input for the ADC
CONFIGURATION			
PDN/SYNC	1	I	Power down/Synchronization input. This pin can be configured via the SPI interface. Active high. This pin has an internal 21 kΩ pull-down resistor.
RESET	9	I	Hardware reset. Active high. This pin has an internal 21 kΩ pull-down resistor.

Copyright © 2020 Texas Instruments Incorporated

Table 5-1. Pin Functions (continued)

PIN		I/O	DESCRIPTION
NAME	NO.		
SCLK	35	I	Serial interface clock input. This pin has an internal 21 kΩ pull-down resistor.
SDIO	10	I	Serial interface data input and output. This pin has an internal 21 kΩ pull-down resistor.
SEN	16	I	Serial interface enable. Active low. This pin has an internal 21 kΩ pull-up resistor to AVDD.
DIGITAL INTERFACE			
DA0	17	O	CMOS digital data output.
DA1	18	I/O	CMOS digital data output. Used as FCLK frame clock output for serialized CMOS output modes. Configured using SPI.
DA2	19	O	CMOS digital data output.
DA3	20	O	CMOS digital data output.
DA4	22	O	CMOS digital data output.
DA5	23	O	CMOS digital data output.
DA6	24	O	CMOS digital data output.
DB0	34	O	CMOS digital data output.
DB1	33	I/O	CMOS digital data output. Used as DCLKIN bit clock input for serialized CMOS output modes. Configured using SPI.
DB2	32	O	CMOS digital data output.
DB3	31	O	CMOS digital data output.
DB4	29	O	CMOS digital data output.
DB5	28	O	CMOS digital data output.
DB6	27	O	CMOS digital data output.
DCLK	25	O	CMOS output for data bit clock.
POWER SUPPLY			
AVDD	5,15,36	I	Analog 1.8-V power supply
GND	11,14,37,40, PowerPAD	I	Ground, 0 V
IOGND	26	I	Ground, 0 V for digital interface
IOVDD	21,30	I	1.8-V power supply for digital interface

Copyright © 2020 Texas Instruments Incorporated

6 Specifications

6.1 Absolute Maximum Ratings

over operating free-air temperature range (unless otherwise noted)(1)

PARAMETER	TEST CONDITIONS	MIN	MAX	UNIT
Supply voltage range, AVDD, IOVDD		–0.3	2.1	V
Supply voltage range, GND, IOGND, REFGND		–0.3	0.3	V
Voltage applied to input pins	AINP/M, BINP/M, CLKP/M, DB1 (DCLKIN)	–0.3	2.1	V
	VREF, REFBUF	–0.3	2.1	
	PDN, RESET, SCLK, SEN, SDIO	–0.3	2.1	
Junction temperature, T_J			105	°C
Storage temperature, T_{stg}		–65	150	°C

(1) Stresses beyond those listed under *Absolute Maximum Ratings* may cause permanent damage to the device. These are stress ratings only, which do not imply functional operation of the device at these or any other conditions beyond those indicated under *Recommended Operating Conditions*. Exposure to absolute-maximum-rated conditions for extended periods may affect device reliability.

6.2 ESD Ratings

			VALUE	UNIT
$V_{(ESD)}$	Electrostatic discharge	Human body model (HBM), per ANSI/ESDA/JEDEC JS-001, all pins(1)	2500	V
		Charged device model (CDM), per JEDEC specification JESD22-C101, all pins(2)	1000	

(1) JEDEC document JEP155 states that 500-V HBM allows safe manufacturing with a standard ESD control process.
(2) JEDEC document JEP157 states that 250-V CDM allows safe manufacturing with a standard ESD control process.

6.3 Recommended Operating Conditions

over operating free-air temperature range (unless otherwise noted)

			MIN	NOM	MAX	UNIT
Supply voltage range		AVDD(1)	1.75	1.8	1.85	V
		IOVDD(1)	1.75	1.8	1.85	V
T_A	Operating free-air temperature		–40		105	°C
T_J	Operating junction temperature				105(2)	°C

(1) Measured to GND.
(2) Prolonged use above this junction temperature may increase the device failure-in-time (FIT) rate.

6.4 Thermal Information

THERMAL METRIC		ADC364x RSB (QFN) 40 Pins	UNIT
$R_{\Theta JA}$	Junction-to-ambient thermal resistance	30.7	°C/W
$R_{\Theta JC(top)}$	Junction-to-case (top) thermal resistance	16.4	°C/W
$R_{\Theta JB}$	Junction-to-board thermal resistance	10.5	°C/W
Ψ_{JT}	Junction-to-top characterization parameter	0.2	°C/W
Ψ_{JB}	Junction-to-board characterization parameter	10.5	°C/W
$R_{\Theta JC(bot)}$	Junction-to-case (bottom) thermal resistance	2.0	°C/W

Copyright © 2020 Texas Instruments Incorporated

6.5 Electrical Characteristics - Power Consumption

Typical values are over the operating free-air temperature range, at T_A = 25°C, full temperature range is T_{MIN} = –40°C to T_{MAX} = 105°C, ADC sampling rate = 65 MSPS, 50% clock duty cycle, AVDD, IOVDD = 1.8 V, external 1.6V reference, 5 pF output load, and –1-dBFS differential input, unless otherwise noted

PARAMETER		TEST CONDITIONS	MIN	TYP	MAX	UNIT
ADC3641 - 10 MSPS						
I_{AVDD}	Analog supply current	External reference		27		mA
I_{IOVDD}	I/O supply current(1)	DDR CMOS		5		mA
P_{DIS}	Power dissipation(1)	External reference, DDR CMOS		58		mW
I_{IOVDD}	I/O supply current(1)	Serial CMOS 2-wire		TBD		mA
		Serial CMOS 1-wire		TBD		
		4x complex decimation, Serial CMOS 2-wire		TBD		
ADC3642 - 25 MSPS						
I_{AVDD}	Analog supply current	External reference		31		mA
I_{IOVDD}	I/O supply current(1)	DDR CMOS		8		mA
P_{DIS}	Power dissipation(1)	External reference, DDR CMOS		70		mW
I_{IOVDD}	I/O supply current(1)	Serial CMOS 2-wire		TBD		mA
		4x complex decimation, Serial CMOS 2-wire		TBD		
ADC3643 - 65 MSPS						
I_{AVDD}	Analog supply current	External reference		64	78	mA
I_{IOVDD}	I/O supply current(1)	DDR CMOS		16	20	mA
P_{DIS}	Power dissipation(1)	External reference, DDR CMOS		144	176	mW
I_{IOVDD}	I/O supply current(1)	8x complex decimation, Serial CMOS 2-wire		19		mA
I_{IOVDD}		16x complex decimation, Serial CMOS 1-wire		17		
I_{IOVDD}		32x complex decimation, Serial CMOS 1-wire		15		
I_{IOVDD}		32x complex decimation, Serial CMOS 1/2-wire		16		
MISCELLANEOUS						
I_{AVDD}	Internal reference, additional analog supply current	F_S = 10 MSPS		1		mA
		F_S = 25 MSPS		1.5		
		F_S = 65 MSPS		3		
	External 1.2V reference (REFBUF), additional analog supply current	Enabled via SPI		0.3		
	Single ended clock input, reduces analog supply current by			0.7		
P_{DIS}	Power consumption in global power down mode	Default power down mask, internal reference		5		mW
		Default power down mask, external reference		9		

(1) Measured with a 2 MHz input frequency full-scale sine wave at specified sample rate, with ~ 5 pF loading on each CMOS output pin.

Copyright © 2020 Texas Instruments Incorporated

6.6 Electrical Characteristics - DC Specifications

Typical values are over the operating free-air temperature range, at T_A = 25°C, full temperature range is T_{MIN} = –40°C to T_{MAX} = 105°C, ADC sampling rate = 65 MSPS, 50% clock duty cycle, AVDD, IOVDD = 1.8 V, external 1.6V reference, 5 pF output load, and –1-dBFS differential input, unless otherwise noted

PARAMETER		TEST CONDITIONS	MIN	TYP	MAX	UNIT
DC ACCURACY						
No missing codes			14			bits
PSRR		F_{IN} = 1 MHz		50		dB
ADC3641 - 10 MSPS: DC ACCURACY						
DNL	Differential nonlinearity	F_{IN} = 5 MHz	TBD	± 0.1	± 0.25	LSB
INL	Integral nonlinearity	F_{IN} = 5 MHz	TBD	± 0.6	± 0.8	LSB
V_{OS_ERR}	Offset error		TBD	8	TBD	LSB
V_{OS_DRIFT}	Offset drift over temperature		TBD	TBD	0.1	LSB/ºC
$GAIN_{ERR}$	Gain error	External 1.6 V reference	TBD	0.05	TBD	%FSR
$GAIN_{DRIFT}$	Gain drift over temperature	External 1.6 V reference	TBD	TBD	10	ppm/ºC
$GAIN_{ERR}$	Gain error	Internal reference	TBD	TBD	TBD	%FSR
$GAIN_{DRIFT}$	Gain drift over temperature	Internal reference	TBD	TBD	TBD	dB
Transition Noise				0.6		LSB_{RMS}
ADC3642 - 25 MSPS: DC ACCURACY						
DNL	Differential nonlinearity	F_{IN} = 5 MHz	TBD	± 0.1	± 0.25	LSB
INL	Integral nonlinearity	F_{IN} = 5 MHz	TBD	± 0.6	± 0.8	LSB
V_{OS_ERR}	Offset error		TBD	8	TBD	LSB
V_{OS_DRIFT}	Offset drift over temperature		TBD	TBD	0.1	LSB/ºC
$GAIN_{ERR}$	Gain error	External 1.6 V reference	TBD	0.05	TBD	%FSR
$GAIN_{DRIFT}$	Gain drift over temperature	External 1.6 V reference	TBD	TBD	10	ppm/ºC
$GAIN_{ERR}$	Gain error	Internal reference	TBD	TBD	TBD	%FSR
$GAIN_{DRIFT}$	Gain drift over temperature	Internal reference	TBD	TBD	TBD	dB
Transition Noise				0.6		LSB_{RMS}
ADC3643 - 65 MSPS: DC ACCURACY						
DNL	Differential nonlinearity	F_{IN} = 5 MHz	-0.35	± 0.2	0.35	LSB
INL	Integral nonlinearity	F_{IN} = 5 MHz	-1.25	± 0.6	1.25	LSB
V_{OS_ERR}	Offset error		35	0	35	LSB
V_{OS_DRIFT}	Offset drift over temperature			-1		LSB/ºC
$GAIN_{ERR}$	Gain error	External 1.6 V reference		0.6		%FSR
$GAIN_{DRIFT}$	Gain drift over temperature	External 1.6 V reference		-5		ppm/ºC
$GAIN_{ERR}$	Gain error	Internal reference		0.8		%FSR
$GAIN_{DRIFT}$	Gain drift over temperature	Internal reference		131		ppm/ºC
Transition Noise				0.6		LSB_{RMS}
ADC ANALOG INPUT (AINP/M, BINP/M)						
FS	Input full scale	Default, differential		2.25		Vpp
V_{CM}	Input common mode voltage		0.9	0.95	1.0	V
R_{IN}	Differential input resistance	F_{IN} = 100 kHz		8		Ω
C_{IN}	Differential input capacitance	F_{IN} = 100 kHz		7		pF
V_{OCM}	Output common mode voltage			0.95		V
BW	Analog input bandwidth (-3dB)			900		MHz

Copyright © 2020 Texas Instruments Incorporated

6.6 Electrical Characteristics - DC Specifications (continued)

Typical values are over the operating free-air temperature range, at T_A = 25°C, full temperature range is T_{MIN} = –40°C to T_{MAX} = 105°C, ADC sampling rate = 65 MSPS, 50% clock duty cycle, AVDD, IOVDD = 1.8 V, external 1.6V reference, 5 pF output load, and –1-dBFS differential input, unless otherwise noted

PARAMETER		TEST CONDITIONS	MIN	TYP	MAX	UNIT
Internal Voltage Reference						
V_{REF}	Internal reference voltage			1.6		V
V_{REF} Output Impedance				8		Ω
Reference Input Buffer (REFBUF)						
External reference voltage				1.2		V
External voltage reference (VREF)						
V_{REF}	External voltage reference			1.6		V
Input Current				0.3		mA
Input impedance				5.3		kΩ
Clock Input (CLKP/M)						
Input clock frequency			0.5		65	MHz
V_{ID}	Differential input voltage			1	3.6	Vpp
V_{CM}	Input common mode voltage			0.9		V
R_{IN}	Single ended input resistance to common mode			5		kΩ
C_{IN}	Single ended input capacitance			1.5		pF
Clock duty cycle			40	50	60	%
Digital Inputs (RESET, PDN, SCLK, SEN, SDIO)						
V_{IH}	High level input voltage		1.4			V
V_{IL}	Low level input voltage				0.4	
I_{IH}	High level input current			90	150	uA
I_{IL}	Low level input current		-150	90		
C_I	Input capacitance			1.5		pF
Digital Output (SDOUT)						
V_{OH}	High level output voltage	I_{LOAD} = -400 uA	IOVDD – 0.1	IOVDD		V
V_{OL}	Low level output voltage	I_{LOAD} = 400 uA			0.1	
CMOS Interface (DA0:DA6, DB0:DB6)						
Output data rate		per CMOS output pin			250	MHz
V_{OH}	High level output voltage	I_{LOAD} = -400 uA	IOVDD – 0.1	IOVDD		V
V_{OL}	Low level output voltage	I_{LOAD} = 400 uA			0.1	
V_{IH}	High level input voltage	Input clock (Serial CMOS)	IOVDD – 0.1	IOVDD		V
V_{IL}	Low level input voltage				0.1	

Copyright © 2020 Texas Instruments Incorporated

6.7 Electrical Characteristics - AC Specifications ADC3641

Typical values are over the operating free-air temperature range, at T_A = 25°C, full temperature range is T_{MIN} = –40°C to T_{MAX} = 105°C, ADC sampling rate = 10 MSPS, external reference, 50% clock duty cycle, AVDD, IOVDD = 1.8 V, external 1.6V reference, 5 pF output load, and –1-dBFS differential input, unless otherwise noted

PARAMETER		TEST CONDITIONS	MIN	TYP	MAX	UNIT
ADC3641: 10 MSPS						
NSD	Noise Spectral Density	f_{IN} = 1.1 MHz, A_{IN} = -20 dBFS		-146.0		dBFS/Hz
SNR	Signal to noise ratio	f_{IN} = 1.1 MHz		79.0		dBFS
		f_{IN} = 4.9 MHz	TBD	79.0		
		f_{IN} = 9.9 MHz		78.0		
SINAD	Signal to noise and distortion ratio	f_{IN} = 1.1 MHz		TBD		dBFS
		f_{IN} = 4.9 MHz	TBD	TBD		
		f_{IN} = 9.9 MHz		TBD		
ENOB	Effective number of bits	f_{IN} = 1.1 MHz		12.8		bit
		f_{IN} = 4.9 MHz	TBD	12.8		
		f_{IN} = 9.9 MHz		12.6		
THD	Total Harmonic Distortion (First five harmonics)	f_{IN} = 1.1 MHz		TBD		dBc
		f_{IN} = 4.9 MHz	TBD	TBD		
		f_{IN} = 9.9 MHz		TBD		
SFDR	Spur free dynamic range including second and third harmonic distortion	f_{IN} = 1.1 MHz		90		dBc
		f_{IN} = 4.9 MHz	TBD	90		
		f_{IN} = 9.9 MHz		90		
Non HD2,3	Spur free dynamic range (excluding HD2 and HD3)	f_{IN} = 1.1 MHz		95		dBFS
		f_{IN} = 4.9 MHz	TBD	95		
		f_{IN} = 9.9 MHz		95		
IMD3	Two tone inter-modulation distortion	f_1 = 1 MHz, f_2 = 2 MHz, A_{IN} = -7 dBFS/tone		TBD		dBc

Copyright © 2020 Texas Instruments Incorporated

6.8 Electrical Characteristics - AC Specifications ADC3642

Typical values are over the operating free-air temperature range, at T_A = 25°C, full temperature range is T_{MIN} = –40°C to T_{MAX} = 105°C, ADC sampling rate = 25 MSPS, external reference, 50% clock duty cycle, AVDD, IOVDD = 1.8 V, external 1.6V reference, 5 pF output load, and –1-dBFS differential input, unless otherwise noted

PARAMETER		TEST CONDITIONS	MIN	TYP	MAX	UNIT
ADC3642: 25 MSPS						
NSD	Noise Spectral Density	f_{IN} = 1.1 MHz, A_{IN} = -20 dBFS		-151.0		dBFS/Hz
SNR	Signal to noise ratio	f_{IN} = 1.1 MHz		79.0		dBFS
		f_{IN} = 5 MHz	TBD	79.0		
		f_{IN} = 10 MHz		78.4		
		f_{IN} = 20 MHz		77.0		
		f_{IN} = 40 MHz		76.0		
SINAD	Signal to noise and distortion ratio	f_{IN} = 1.1 MHz		TBD		dBFS
		f_{IN} = 5 MHz	TBD	TBD		
		f_{IN} = 10 MHz		TBD		
		f_{IN} = 20 MHz		TBD		
		f_{IN} = 40 MHz		TBD		
ENOB	Effective number of bits	f_{IN} = 1.1 MHz		12.8		bit
		f_{IN} = 5 MHz	TBD	12.8		
		f_{IN} = 10 MHz		12.7		
		f_{IN} = 20 MHz		12.5		
		f_{IN} = 40 MHz		12.3		
THD	Total Harmonic Distortion (First five harmonics)	f_{IN} = 1.1 MHz		TBD		dBc
		f_{IN} = 5 MHz	TBD	TBD		
		f_{IN} = 10 MHz		TBD		
		f_{IN} = 20 MHz		TBD		
		f_{IN} = 40 MHz		TBD		
SFDR	Spur free dynamic range including second and third harmonic distortion	f_{IN} = 1.1 MHz		90		dBc
		f_{IN} = 5 MHz	TBD	90		
		f_{IN} = 10 MHz		90		
		f_{IN} = 20 MHz		88		
		f_{IN} = 40 MHz		85		
Non HD2,3	Spur free dynamic range (excluding HD2 and HD3)	f_{IN} = 1.1 MHz		95		dBFS
		f_{IN} = 5 MHz	TBD	95		
		f_{IN} = 10 MHz		95		
		f_{IN} = 20 MHz		95		
		f_{IN} = 40 MHz		95		
IMD3	Two tone inter-modulation distortion	f_1 = 1 MHz, f_2 = 2 MHz, A_{IN} = -7 dBFS/tone		TBD		dBc
		f_1 = 10 MHz, f_2 = 12 MHz, A_{IN} = -7 dBFS/tone		TBD		

Copyright © 2020 Texas Instruments Incorporated

6.9 Electrical Characteristics - AC Specifications ADC3643

Typical values are over the operating free-air temperature range, at T_A = 25°C, full temperature range is T_{MIN} = –40°C to T_{MAX} = 105°C, ADC sampling rate = 65 MSPS, external reference, 50% clock duty cycle, AVDD, IOVDD = 1.8 V, external 1.6V reference, 5 pF output load, and –1-dBFS differential input, unless otherwise noted

PARAMETER		TEST CONDITIONS	MIN	TYP	MAX	UNIT
ADC3643: 65 MSPS						
NSD	Noise Spectral Density	f_{IN} = 1.1 MHz, A_{IN} = -20 dBFS		-155.0		dBFS/Hz
SNR	Signal to noise ratio	f_{IN} = 1.1 MHz		79.0		dBFS
		f_{IN} = 5 MHz	77.0	79.0		
		f_{IN} = 10 MHz		79.0		
		f_{IN} = 20 MHz		78.8		
		f_{IN} = 40 MHz		77.0		
		f_{IN} = 64 MHz		74.0		
SINAD	Signal to noise and distortion ratio	f_{IN} = 1.1 MHz		79.0		dBFS
		f_{IN} = 5 MHz	76.2	79.0		
		f_{IN} = 10 MHz		78.9		
		f_{IN} = 20 MHz		78.0		
		f_{IN} = 40 MHz		76.0		
		f_{IN} = 64 MHz		73.4		
ENOB	Effective number of bits	f_{IN} = 1.1 MHz		12.8		bit
		f_{IN} = 5 MHz	12.4	12.8		
		f_{IN} = 10 MHz		12.8		
		f_{IN} = 20 MHz		12.8		
		f_{IN} = 40 MHz		12.5		
		f_{IN} = 64 MHz		12.0		
THD	Total Harmonic Distortion (First five harmonics)	f_{IN} = 1.1 MHz		88		dBc
		f_{IN} = 5 MHz	84	91		
		f_{IN} = 10 MHz		91		
		f_{IN} = 20 MHz		85		
		f_{IN} = 40 MHz		82		
		f_{IN} = 64 MHz		81		
SFDR	Spur free dynamic range including second and third harmonic distortion	f_{IN} = 1.1 MHz		90		dBc
		f_{IN} = 5 MHz	88	93		
		f_{IN} = 10 MHz		95		
		f_{IN} = 20 MHz		88		
		f_{IN} = 40 MHz		83		
		f_{IN} = 64 MHz		84		
Non HD2,3	Spur free dynamic range (excluding HD2 and HD3)	f_{IN} = 1.1 MHz		100		dBFS
		f_{IN} = 5 MHz	93	101		
		f_{IN} = 10 MHz		98		
		f_{IN} = 20 MHz		95		
		f_{IN} = 40 MHz		94		
		f_{IN} = 64 MHz		90		
IMD3	Two tone inter-modulation distortion	f_1 = 10 MHz, f_2 = 12 MHz, A_{IN} = -7 dBFS/tone		92		dBc

Copyright © 2020 Texas Instruments Incorporated

6.10 Timing Requirements

Typical values are over the operating free-air temperature range, at T_A = 25°C, full temperature range is T_{MIN} = –40°C to T_{MAX} = 105°C, ADC sampling rate = 65 MSPS, 50% clock duty cycle, AVDD, IOVDD = 1.8 V, and –1-dBFS differential input, unless otherwise noted

PARAMETER		TEST CONDITIONS	MIN	NOM	MAX	UNIT
ADC Timing Specifications						
t_{AD}	Aperture delay			0.85		ns
t_A	Aperture jitter	Square wave clock with fast edges		180		fs
t_J	Jitter on DCLKIN	Serial CMOS output mode			± 50	ps
Recory time from +6 dB overload condition		SNR within 1 dB of expected value		1		Clock cycle
t_{ACQ}	Signal acquisition period, referenced to sampling clock falling edge	F_S = 10 Msps		$-T_S/2$		Sampling Clock Period
		F_S = 25 Msps		$-T_S/2$		
		F_S = 65 Msps		$-T_S/4$		
t_{CONV}	Signal conversion period, referenced to sampling clock falling edge	F_S = 10 Msps		$+T_S \times 1/5$		Sampling Clock Period
		F_S = 25 Msps		$+T_S \times 3/8$		
		F_S = 65 Msps		$+T_S \times 5/8$		
Wake up time	Time to valid data after coming out of power down. Internal reference.	Bandgap reference enabled, single ended clock		14.6		us
		Bandgap reference enabled, differential clock		14.0		
		Bandgap reference disabled, single ended clock		1.7		ms
		Bandgap reference disabled, differential clock		2.1		
	Time to valid data after coming out of power down. External 1.6V reference.	Bandgap reference enabled, single ended clock		14.6		us
		Bandgap reference enabled, differential clock		14.0		
		Bandgap reference disabled, single ended clock		1.8		ms
		Bandgap reference disabled, differential clock		1.7		
$t_{S,SYNC}$	Setup time for SYNC input signal	Referenced to sampling clock rising edge	500			ps
$t_{H,SYNC}$	Hold time for SYNC input signal		600			
ADC Latency	Signal input to data output	DDR CMOS		1		Clock cycles
		Serialized CMOS: 2-wire		2		
		Serialized CMOS: 1-wire		1		
		Serialized CMOS: 1/2-wire		1		
Add. Latency	Real decimation by 2			21		Output clock cycles
	Complex decimation by 2			22		
	Real or complex decimation by 4, 8, 16, 32			23		
INTERFACE TIMING - PARALLEL DDR CMOS						
t_{PD}	Propagation delay: sampling clock falling edge to DCLK rising edge		3	5	7	ns
t_{CD}	DCLK rising edge to output data delay	Fout = 10 MSPS	-0.70	-0.32		ns
		Fout = 25 MSPS	-0.68	-0.30		
		Fout = 65 MSPS	-0.73	-0.31		
t_{DV}	Data valid, DDR CMOS	Fout = 10 MSPS	49.35	49.93		ns
		Fout = 25 MSPS	19.66	19.77		
		Fout = 65 MSPS	7.42	7.51		

Copyright © 2020 Texas Instruments Incorporated

6.10 Timing Requirements (continued)

Typical values are over the operating free-air temperature range, at T_A = 25°C, full temperature range is T_{MIN} = –40°C to T_{MAX} = 105°C, ADC sampling rate = 65 MSPS, 50% clock duty cycle, AVDD, IOVDD = 1.8 V, and –1-dBFS differential input, unless otherwise noted

PARAMETER		TEST CONDITIONS	MIN	NOM	MAX	UNIT
INTERFACE TIMING - SERIAL CMOS						
t_{PD}	Propagation delay: sampling clock falling edge to DCLK rising edge	Delay between sampling clock falling edge to DCLKIN falling edge < 2.5ns. T_{DCLK} = DCLK period t_{CDCLK} = Sampling clock falling edge to DCLKIN falling edge	$2 + T_{DCLK} + t_{CDCLK}$	$3 + T_{DCLK} + t_{CDCLK}$	$4 + T_{DCLK} + t_{CDCLK}$	ns
		Delay between sampling clock falling edge to DCLKIN falling edge >= 2.5ns. T_{DCLK} = DCLK period t_{CDCLK} = Sampling clock falling edge to DCLKIN falling edge	$2 + t_{CDCLK}$	$3 + t_{CDCLK}$	$4 + t_{CDCLK}$	
t_{CD}	DCLK rising edge to output data delay, 2-wire serial CMOS	Fout = 10 MSPS, DA/B5,6 = 80 MBPS	-0.24	0.10		ns
		Fout = 20 MSPS, DA/B5,6 = 160 MBPS	-0.29	0.10		
		Fout = 30 MSPS, DA/B5,6 = 240 MBPS	-0.28	0.09		
	DCLK rising edge to output data delay, 1-wire series CMOS	Fout = 5 MSPS, DA/B6 = 80 MBPS	-0.22	0.11		
		Fout = 10 MSPS, DA/B6 = 160 MBPS	-0.27	0.11		
		Fout = 15 MSPS, DA/B6 = 240 MBPS	-0.52	0.08		
	DCLK rising edge to output data delay, 1/2-wire serial CMOS	Fout = 5 MSPS, DA6 = 160 MBPS	-0.24	0.10		
t_{DV}	Data valid, 2-wire serial CMOS	Fout = 10 MSPS, DA/B5,6 = 80 MBPS	12.19	12.36		ns
		Fout = 20 MSPS, DA/B5,6 = 160 MBPS	5.93	6.1		
		Fout = 30 MSPS, DA/B5,6 = 240 MBPS	3.91	4.07		
	Data valid, 1-wire serial CMOS	Fout = 5 MSPS, DA/B6 = 80 MBPS	12.21	12.39		
		Fout = 10 MSPS, DA/B6 = 160 MBPS	5.95	6.1		
		Fout = 15 MSPS, DA/B6 = 240 MBPS	3.83	4.08		
	Data valid, 1/2-wire serial CMOS	Fout = 5 MSPS, DA6 = 160 MBPS	5.36	6.13		
SERIAL PROGRAMMING INTERFACE (SCLK, SEN, SDIO) - Input						
$f_{CLK(SCLK)}$	Serial clock frequency				20	MHz
$t_{SU(SEN)}$	SEN to rising edge of SCLK		10			ns
$t_{H(SEN)}$	SEN from rising edge of SCLK		9			
$t_{SU(SDIO)}$	SDIO to rising edge of SCLK		17			
$t_{H(SDIO)}$	SDIO from rising edge of SCLK		9			
SERIAL PROGRAMMING INTERFACE (SDIO) - Output						
$t_{(OZD)}$	SDIO tri-state to driven		3.9		10.8	ns
$t_{(ODZ)}$	SDIO data to tri-state		3.4		14	
$t_{(OD)}$	SDIO valid from falling edge of SCLK		3.9		10.8	

Copyright © 2020 Texas Instruments Incorporated

6.11 Typical Characteristics - ADC3643

Typical values at T_A = 25 °C, ADC sampling rate F_S = 65 MSPS, AIN = –1 dBFS differential input, AVDD = IOVDD = 1.8 V, 65k FFT, external 1.6 V reference, 5 pF output load, unless otherwise noted.

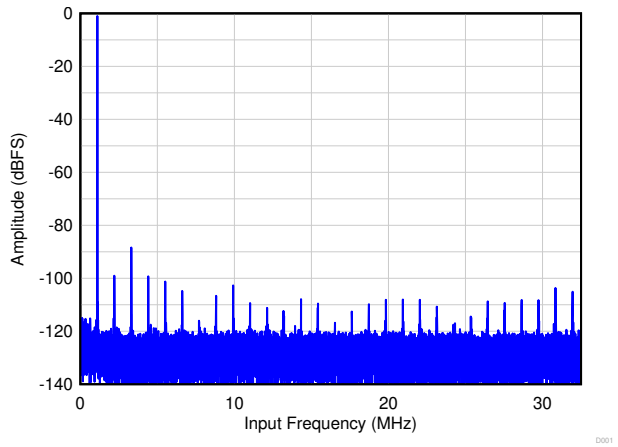

Figure 6-1. Single Tone FFT at F_{IN} = 1.1 MHz

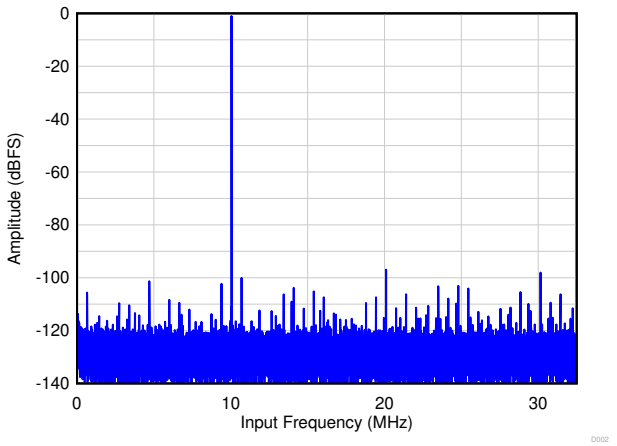

Figure 6-2. Single Tone FFT at F_{IN} = 10 MHz

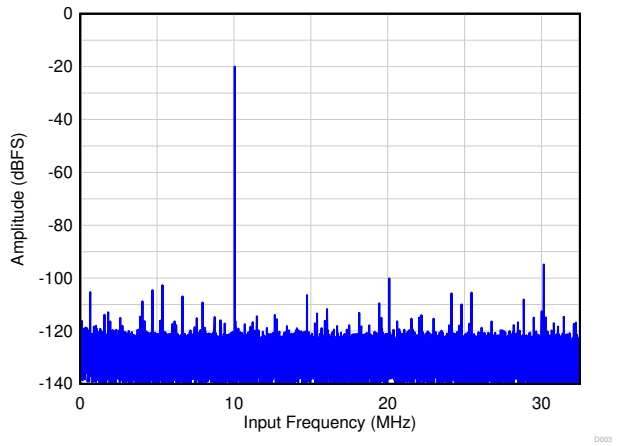

A_{IN} = -20 dBFS

Figure 6-3. Single Tone FFT at F_{IN} = 10 MHz

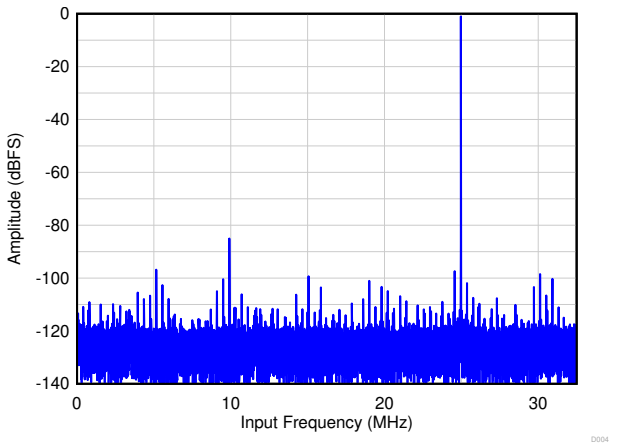

Figure 6-4. Single Tone FFT at F_{IN} = 40 MHz

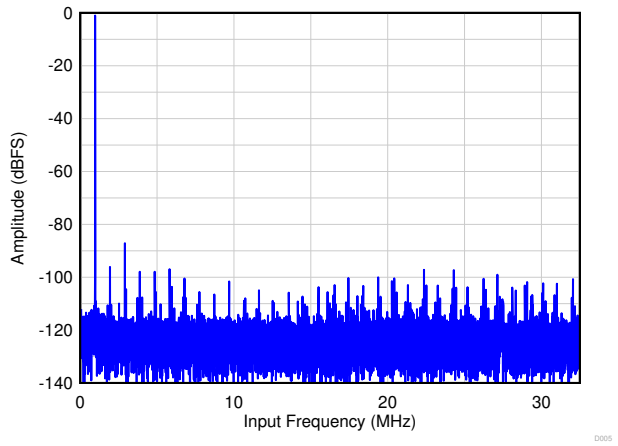

Figure 6-5. Single Tone FFT at F_{IN} = 64 MHz

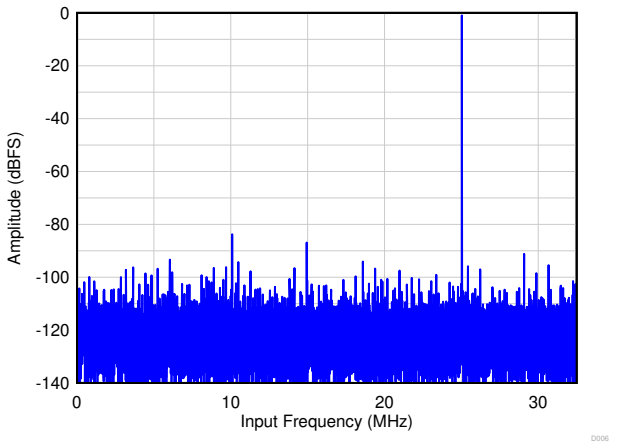

Figure 6-6. Single Tone FFT at F_{IN} = 90 MHz

Copyright © 2020 Texas Instruments Incorporated

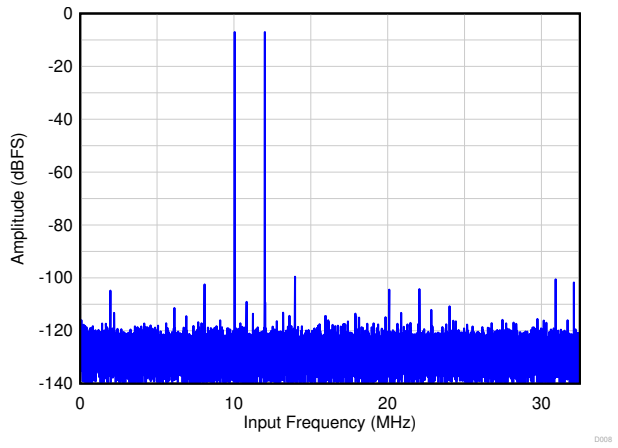

A_{IN} = -7 dBFS/tone

Figure 6-7. Two Tone FFT at F_{IN} = 10/12 MHz

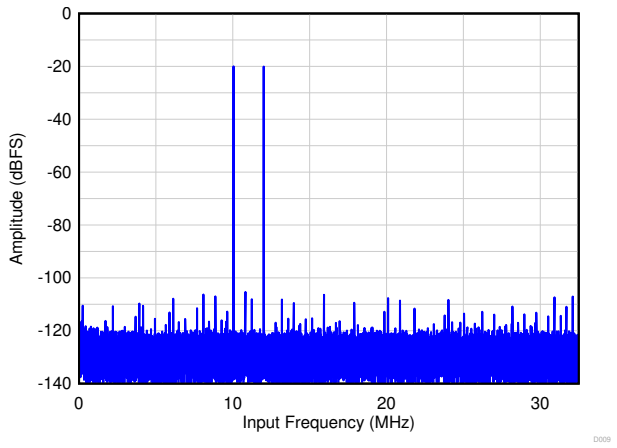

A_{IN} = -20 dBFS/tone

Figure 6-8. Two Tone FFT at F_{IN} = 10/12 MHz

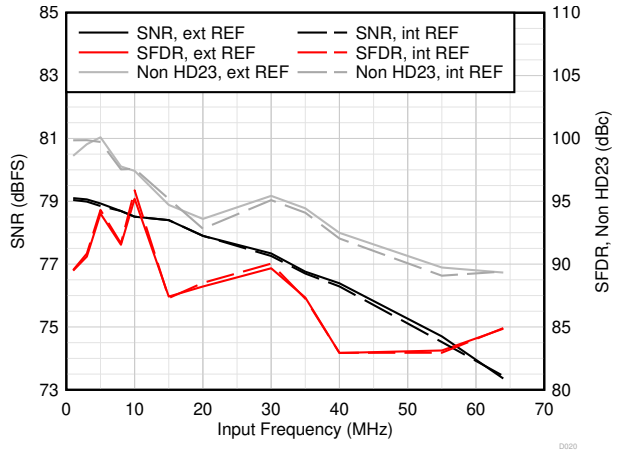

Figure 6-9. AC Performance vs Input Frequency

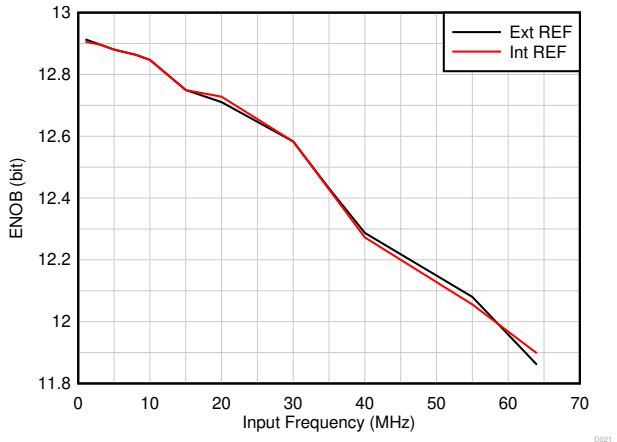

Figure 6-10. ENOB vs Input Frequency

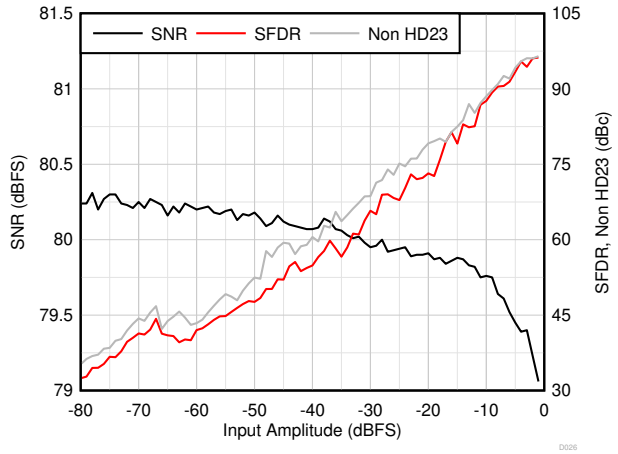

F_{IN} = 5 MHz

Figure 6-11. AC Performance vs Input Amplitude

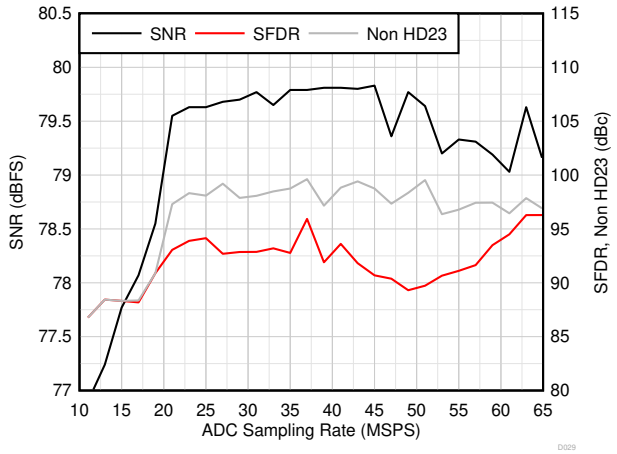

F_{IN} = 5 MHz

Figure 6-12. AC Performance vs Sampling Rate

Copyright © 2020 Texas Instruments Incorporated

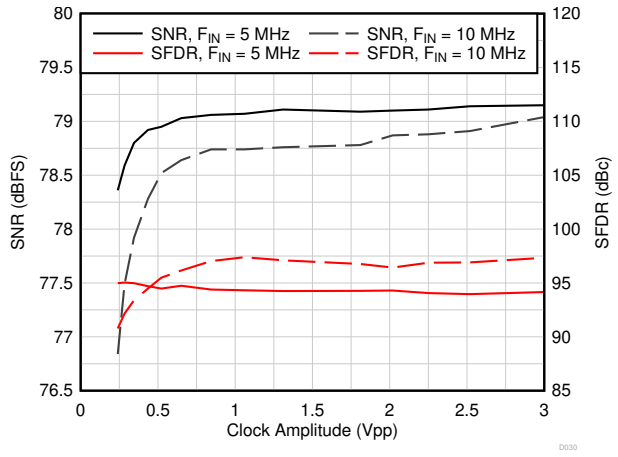

Figure 6-13. AC Performance vs Clock Amplitude

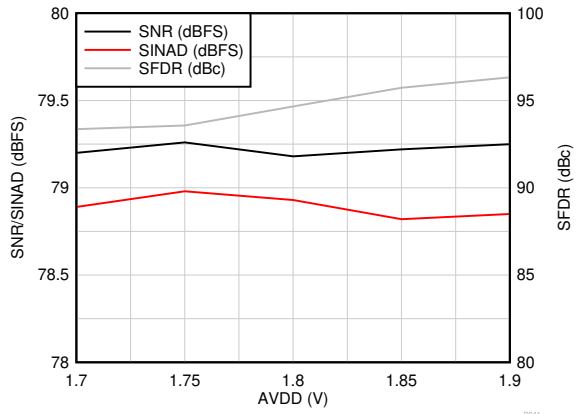

F_{IN} = 5 MHz

Figure 6-14. AC Performance vs AVDD

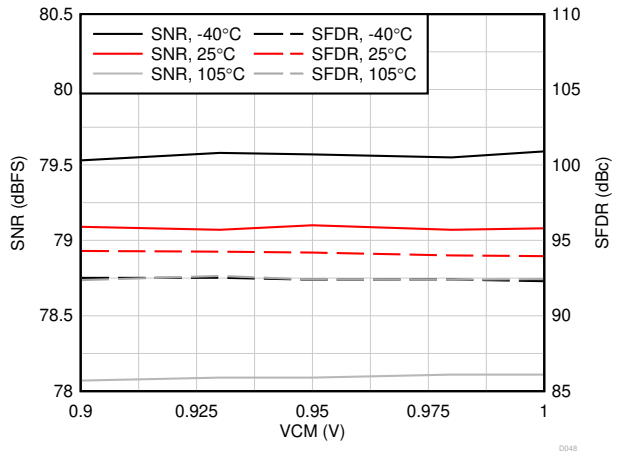

F_{IN} = 5 MHz

Figure 6-15. AC Performance vs VCM vs Temperature

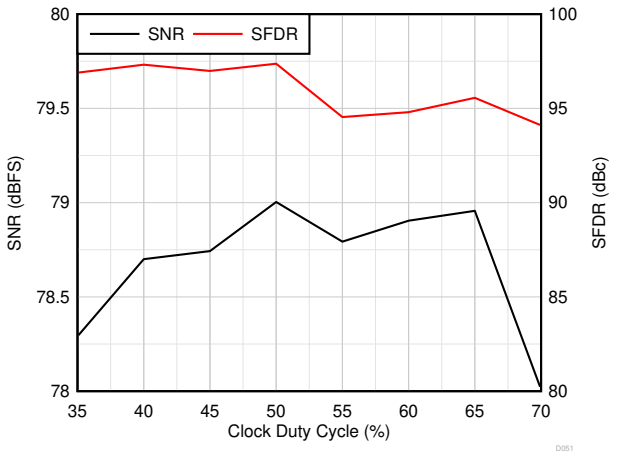

F_{IN} = 5 MHz

Figure 6-16. AC Performance vs Clock Duty Cycle

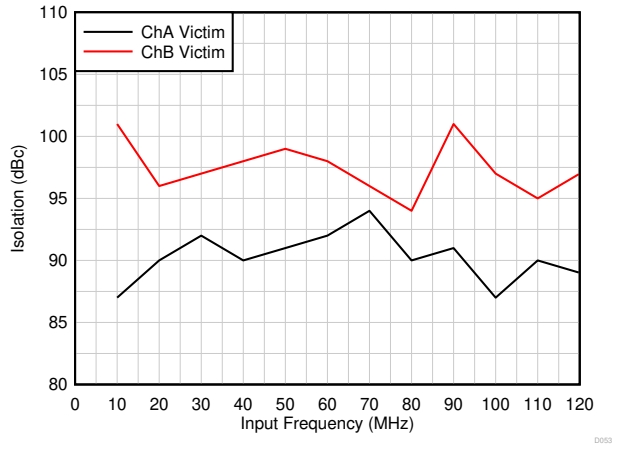

Figure 6-17. Isolation vs Input Frequency

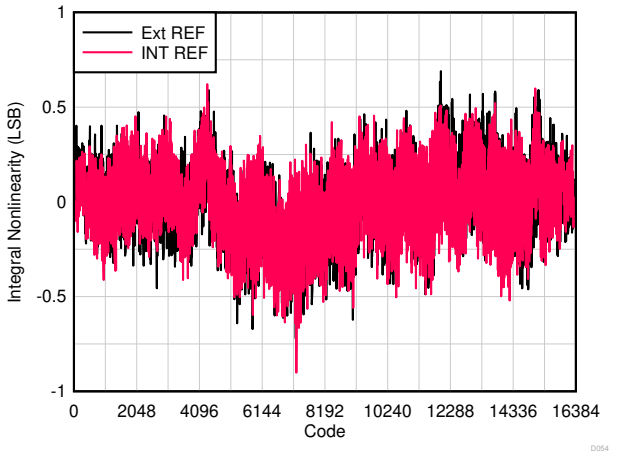

F_{IN} = 5 MHz

Figure 6-18. INL vs Code

Copyright © 2020 Texas Instruments Incorporated

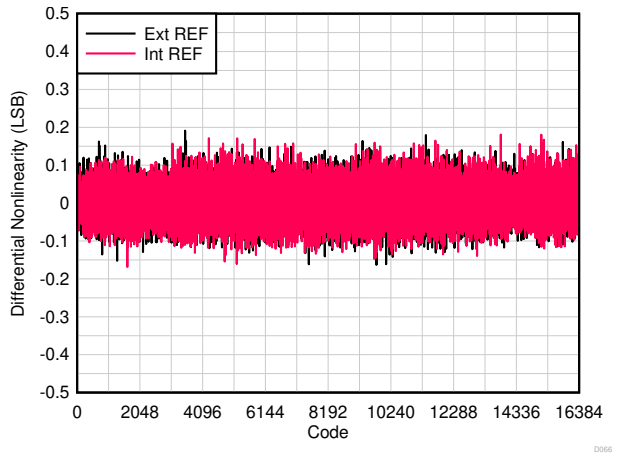

F_{IN} = 5 MHz

Figure 6-19. DNL vs Code

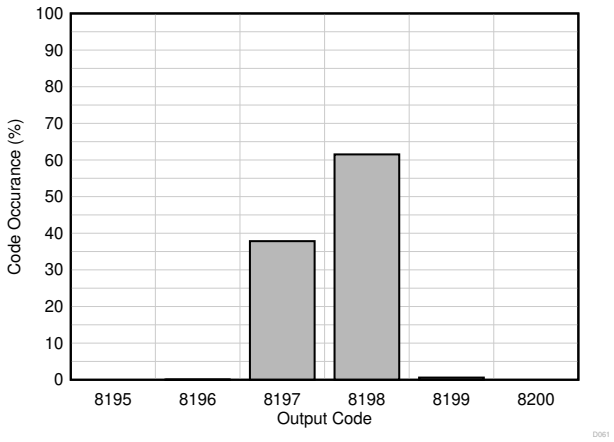

Figure 6-20. DC Histogram

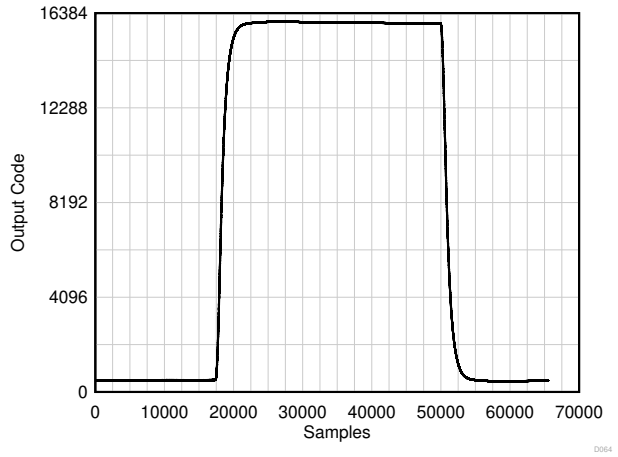

Pulse input = 1 MHz

Figure 6-21. Pulse Response

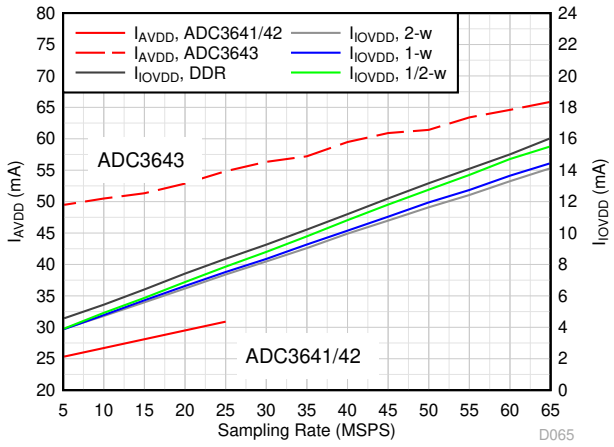

F_{IN} = 1 MHz

Figure 6-22. Current vs Sampling Rate

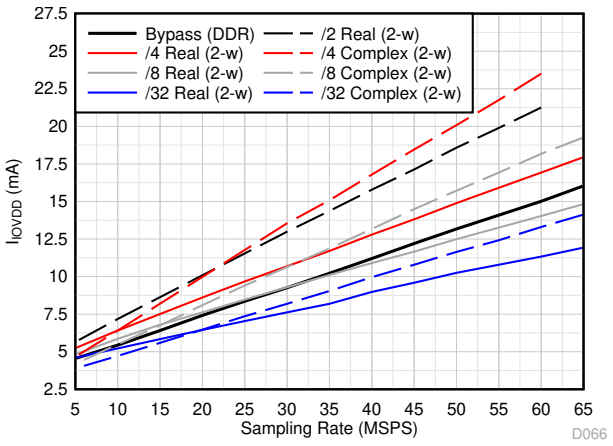

F_{IN} = 1 MHz

Figure 6-23. I_{IOVDD} Current vs Decimation

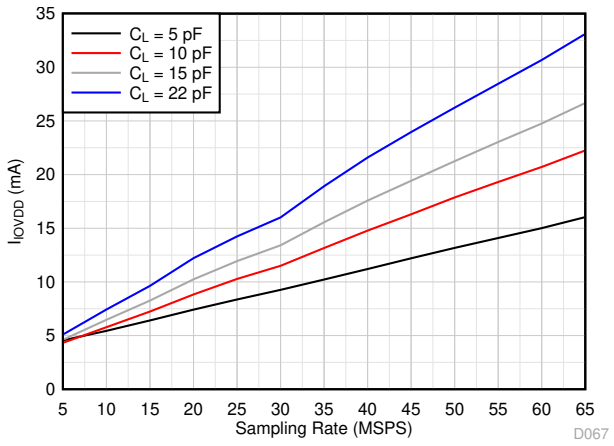

F_{IN} = 1 MHz

Figure 6-24. I_{IOVDD} Current vs Load Capacitance

Copyright © 2020 Texas Instruments Incorporated

7 Parameter Measurement Information

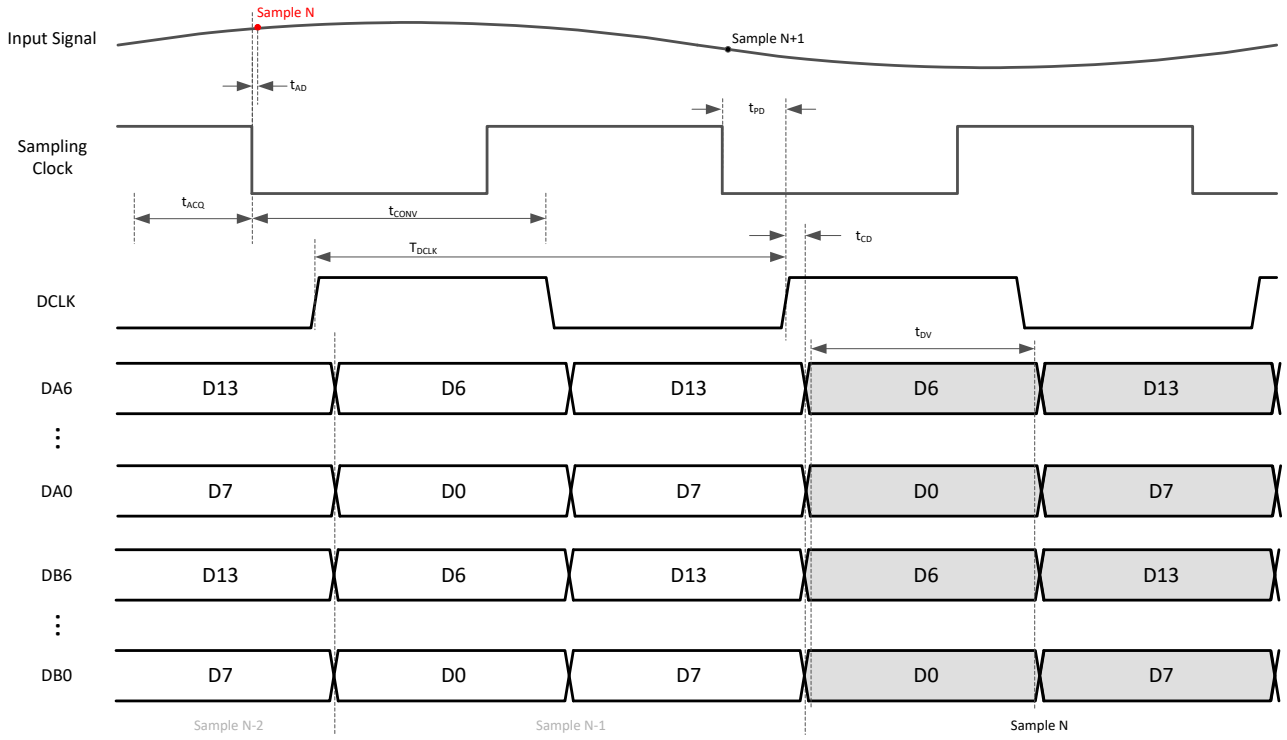

Figure 7-1. Timing diagram: DDR CMOS

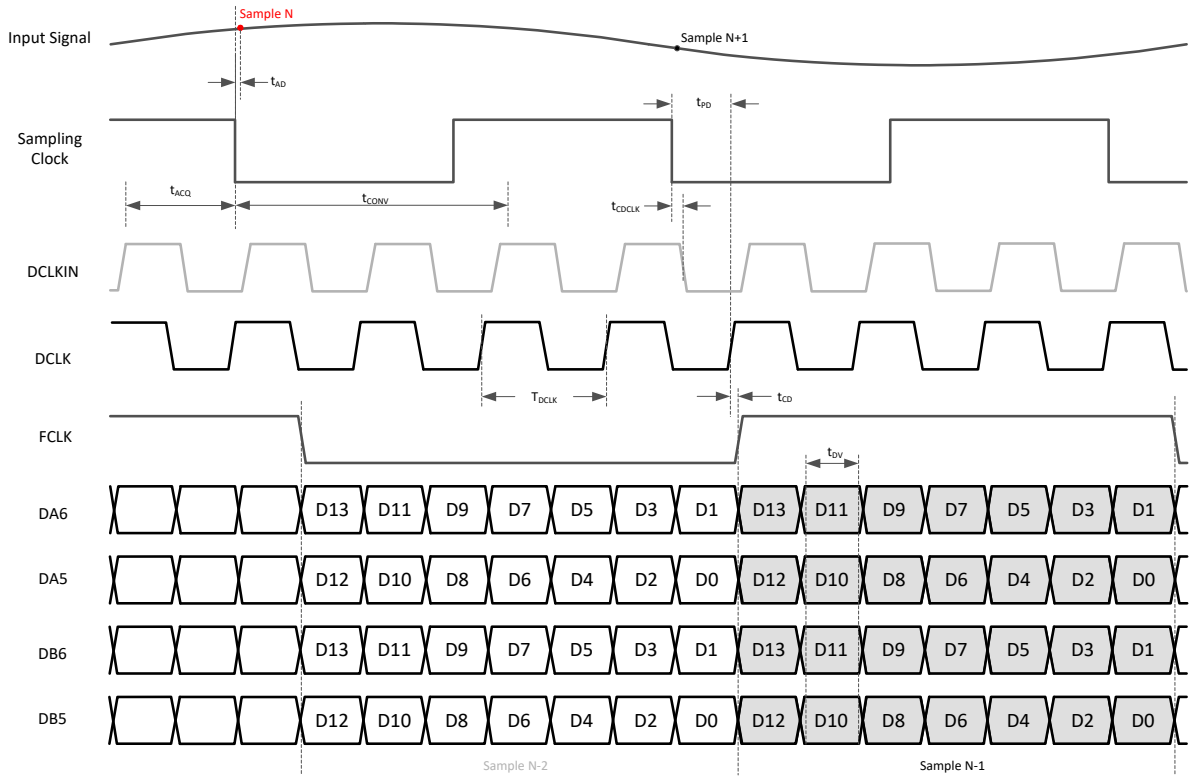

Figure 7-2. Timing diagram: 2-wire serial CMOS

Copyright © 2020 Texas Instruments Incorporated

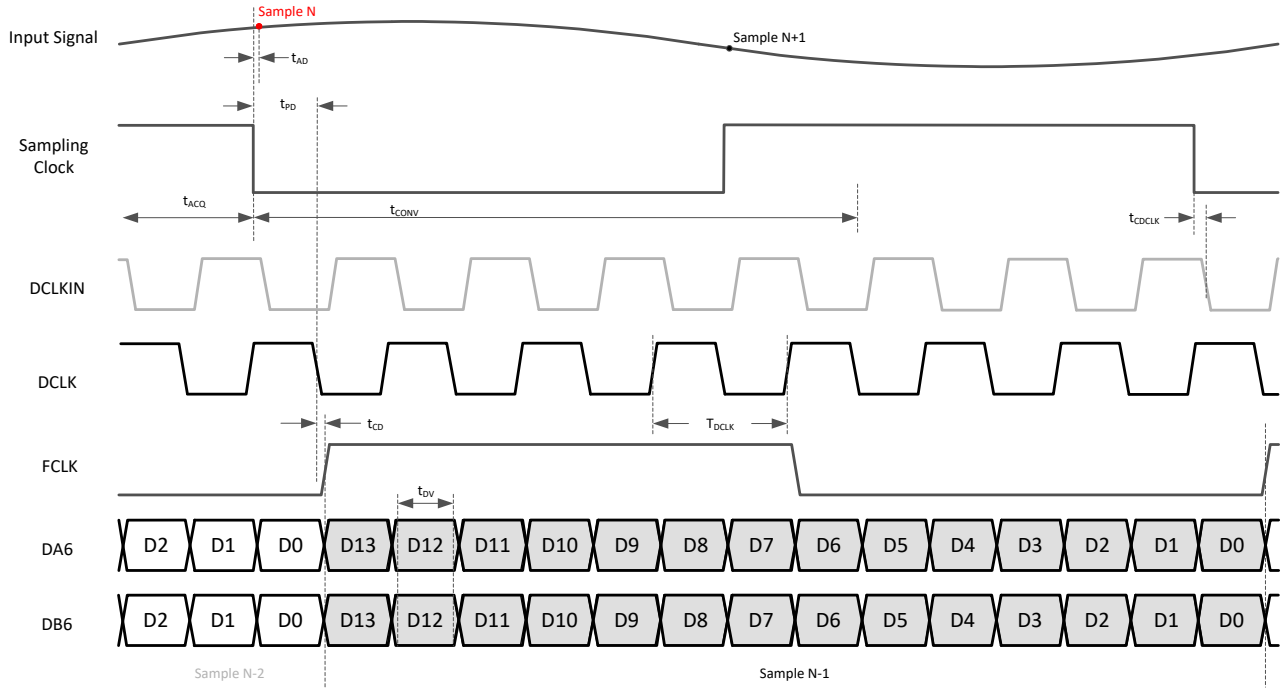

Figure 7-3. Timing diagram: 1-wire serial CMOS

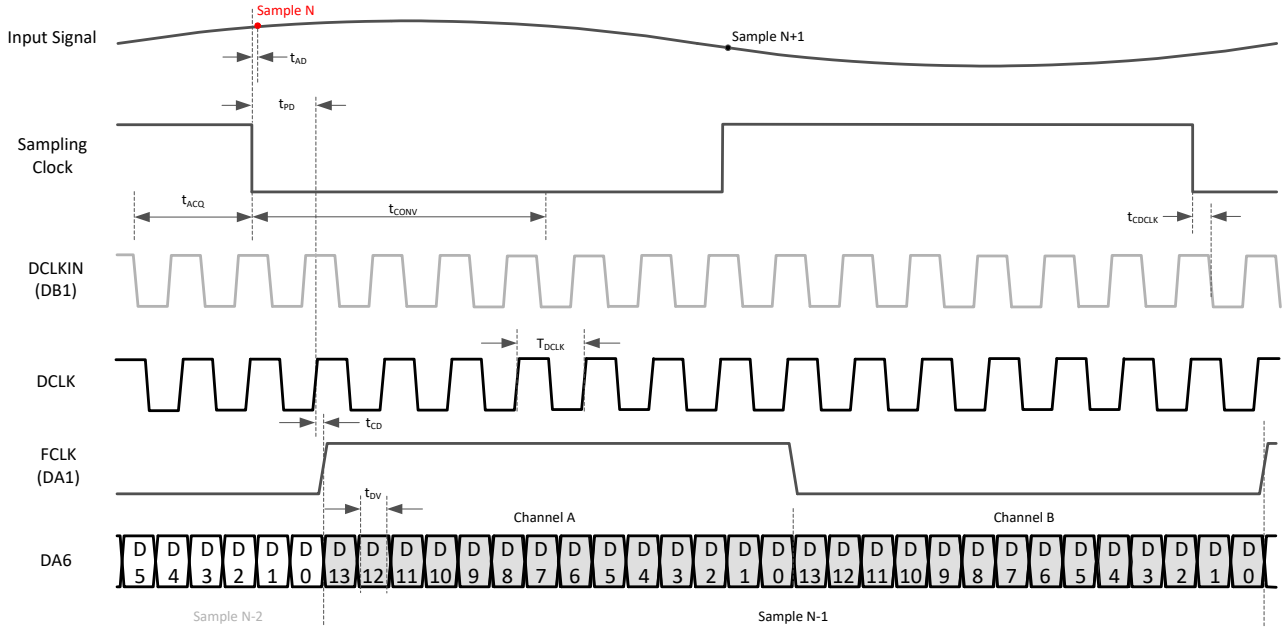

Figure 7-4. Timing diagram: 1/2-wire serial CMOS

Copyright © 2020 Texas Instruments Incorporated

8 Detailed Description

8.1 Overview

The ADC364x is a low noise, ultra-low power 14-bit high-speed dual channel ADC family supporting sampling rates from 10 to 65 Msps. It offers very good DC precision together with IF sampling support which makes it ideally suited for a wide range of applications. The ADC364x is equipped with an on-chip internal reference option but it also supports the use of an external, high precision 1.6 V voltage reference or an external 1.2 V reference which is buffered and gained up internally. Because of the inherent low latency architecture, the digital output result is available after only one clock cycle. Single ended as well as differential input signaling is supported.

An optional programmable digital down converter enables external anti-alias filter relaxation as well as output data rate reduction. The digital filter provides a 32-bit programmable NCO and supports both real or complex decimation.

The ADC364x family uses a parallel DDR CMOS as well as a 2-wire, 1-wire and 1/2-wire serial CMOS interface to output the data offering lowest power digital interface together with the flexibility to minimize the number of digital interconnects. The ADC364x includes a digital output formatter which supports output resolutions from 14 to 20-bit. The device is a pin-to-pin compatible family with different speed grades.

The device features and control options can be set up either through pin configurations or via SPI register writes.

8.2 Functional Block Diagram

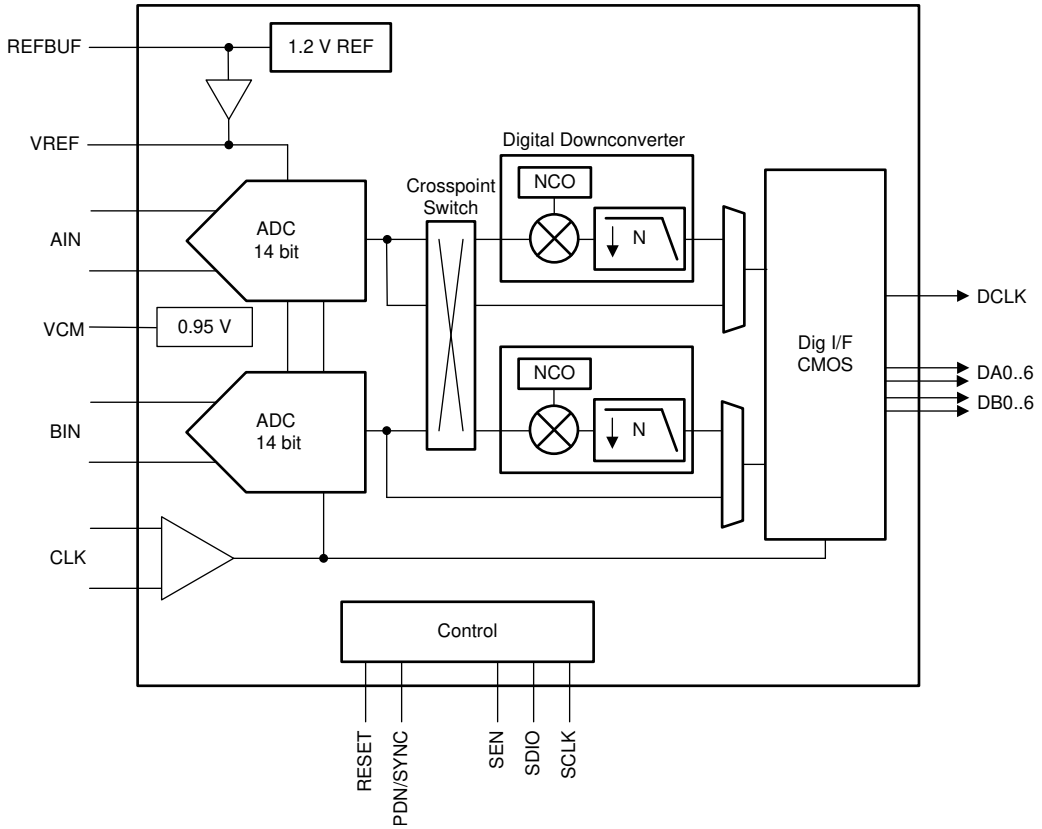

8.3 Feature Description

8.3.1 Analog Input

The analog inputs of ADC364x are intended to be driven differentially. Both AC coupling and DC coupling of the analog inputs is supported. The analog inputs are designed for an input common mode voltage of 0.95 V which must be provided externally on each input pin. DC-coupled input signals must have a common mode voltage that meets the device input common mode voltage range.

The equivalent input network diagram is shown in Figure 8-1. All four sampling switches, on-resistance shown in red, are in same position (open or closed) simultaneously.

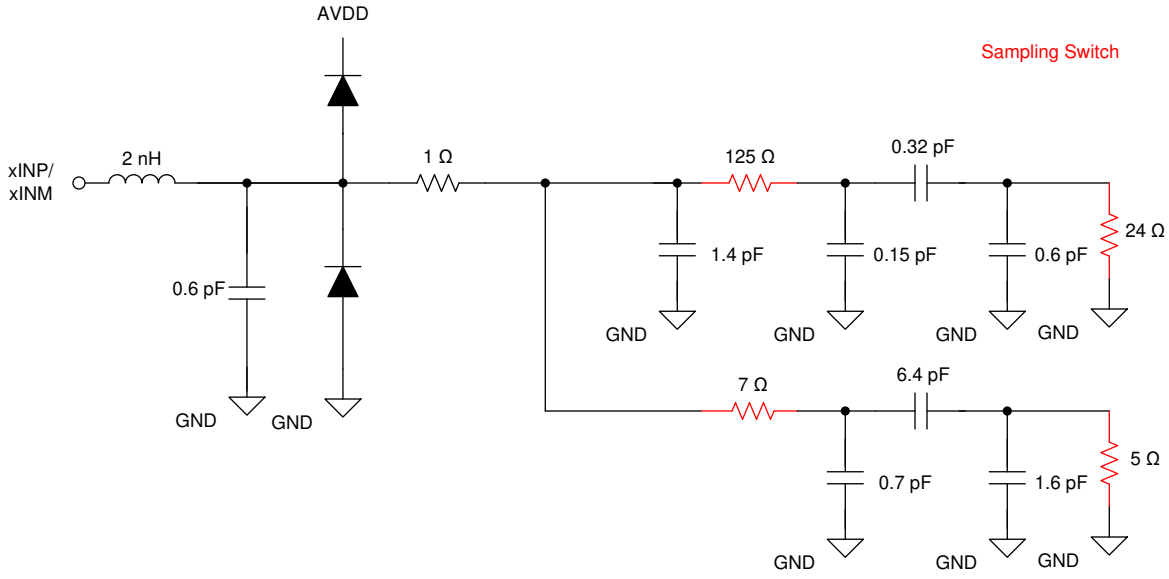

Figure 8-1. Equivalent Input Network

8.3.1.1 Analog Input Bandwidth

Figure 8-2 shows the analog full power input bandwidth of the ADC364x with a 50 Ω. The -3 dB bandwidth is approximately 900 MHz and the useful input bandwidth with good AC performance is approximately 120 MHz.

The equivalent input resistance R_{IN} and input capacitance C_{IN} vs frequency are shown in Figure 8-3.

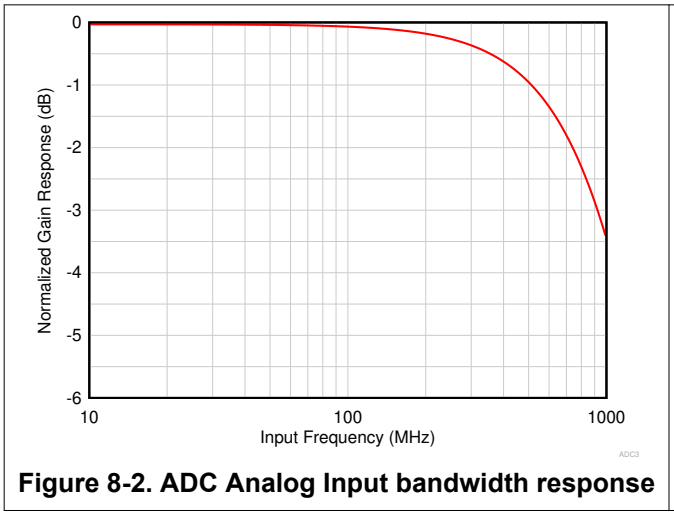

Figure 8-2. ADC Analog Input bandwidth response

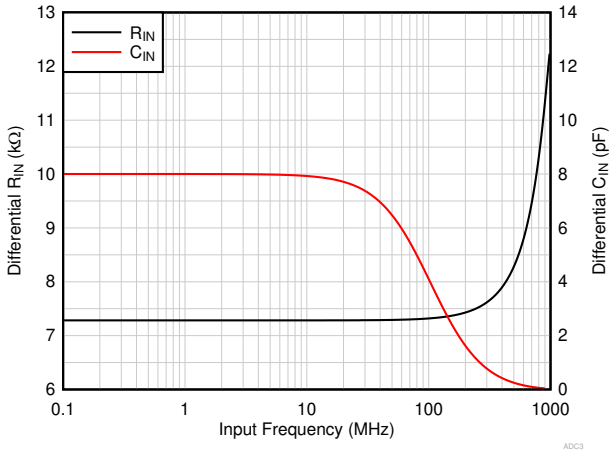

Figure 8-3. Equivalent R_{IN}/C_{IN} vs Input Frequency

Copyright © 2020 Texas Instruments Incorporated

8.3.1.2 Analog Front End Design

The ADC364x is an unbuffered ADC and thus a passive kick-back filter is recommended to absorb the glitch from the sampling operation. Depending on if the input is driven by a balun or a differential amplifier with low output impedance, a termination network may be needed. Additionally a passive DC bias circuit is required in AC-coupled applications which can be combined with the termination network.

8.3.1.2.1 Sampling Glitch Filter Design

The front end sampling glitch filter is designed to optimize the SNR and HD3 performance of the ADC. The filter performance is dependent on input frequency and therefore the following filter designs are recommended for different input frequency ranges as shown in Figure 8-4 and Figure 8-5 (assuming 50 Ω source impedance).

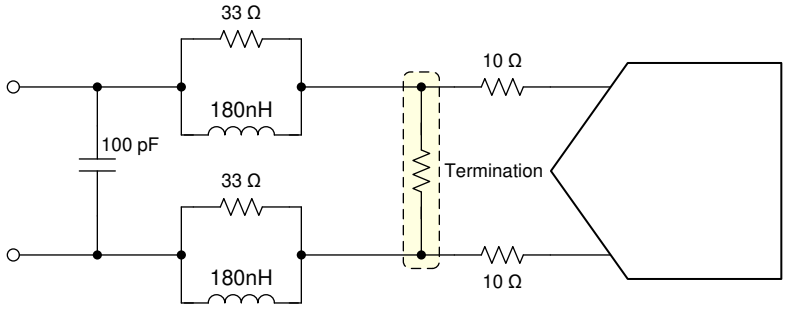

Figure 8-4. Sampling glitch filter example for input frequencies from DC to 30 MHz

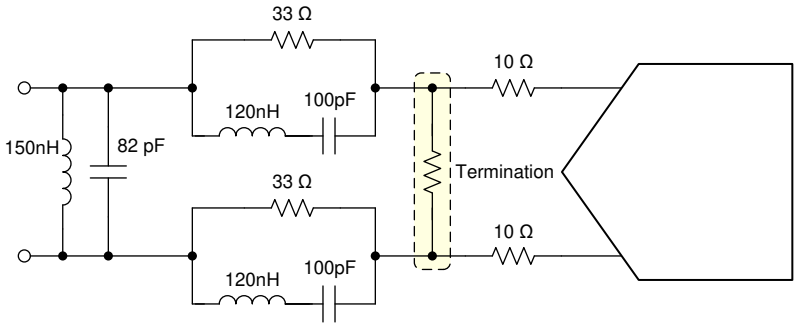

Figure 8-5. Sampling glitch filter example for input frequencies from 30 to 70 MHz

8.3.1.2.2 Single Ended Input

The ADC can be configured to operate with single ended input instead of differential using just the positive signal input. This operating mode must be enabled via SPI register write (address 0x11). The single ended signal is connected to the negative ADC input and both the positive and negative input need to be biased to VCM as shown in Figure 8-6.

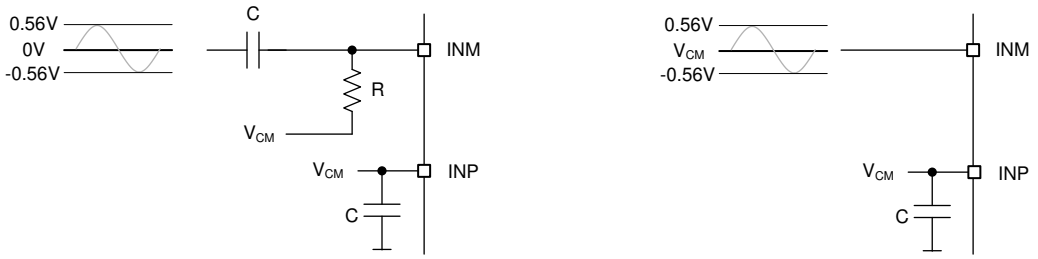

Figure 8-6. Single ended analog input: AC coupled (left) and DC coupled (right)

The signal swing is now reduced by 6-dB (single ended input with 1.125 Vpp vs differential 2.25 Vpp), and the resulting SNR is reduced by 3-dB.

Copyright © 2020 Texas Instruments Incorporated

8.3.1.2.3 Analog Input Termination and DC Bias

Depending on the input drive circuitry, a termination network and/or DC biasing needs to be provided.

8.3.1.2.3.1 AC-Coupling

The ADC364x requires external DC bias using the common mode output voltage (VCM) of the ADC together with the termination network as shown in Figure 8-7. The termination is located within the glitch filter network. When using a balun on the input, the termination impedance has to be adjusted to account for the turns ratio of the transformer. When using an amplifier, the termination impedance can be adjusted to optimize the amplifier performance.

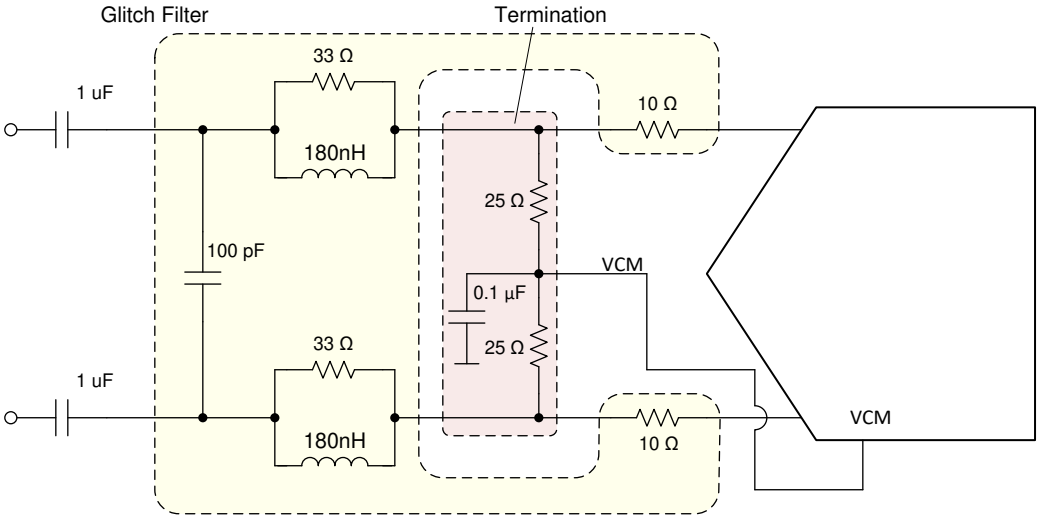

Figure 8-7. AC-Coupling: termination network provides DC bias (glitch filter example for DC - 30 MHz)

8.3.1.2.3.2 DC-Coupling

In DC coupled applications the DC bias needs to be provided from the fully differential amplifier (FDA) using VCM output of the ADC as shown in Figure 8-8. The glitch filter in this case is located between the anti-alias filter and the ADC. No termination may be needed if amplifier is located close to the ADC or if the termination is part of the anti-alias filter.

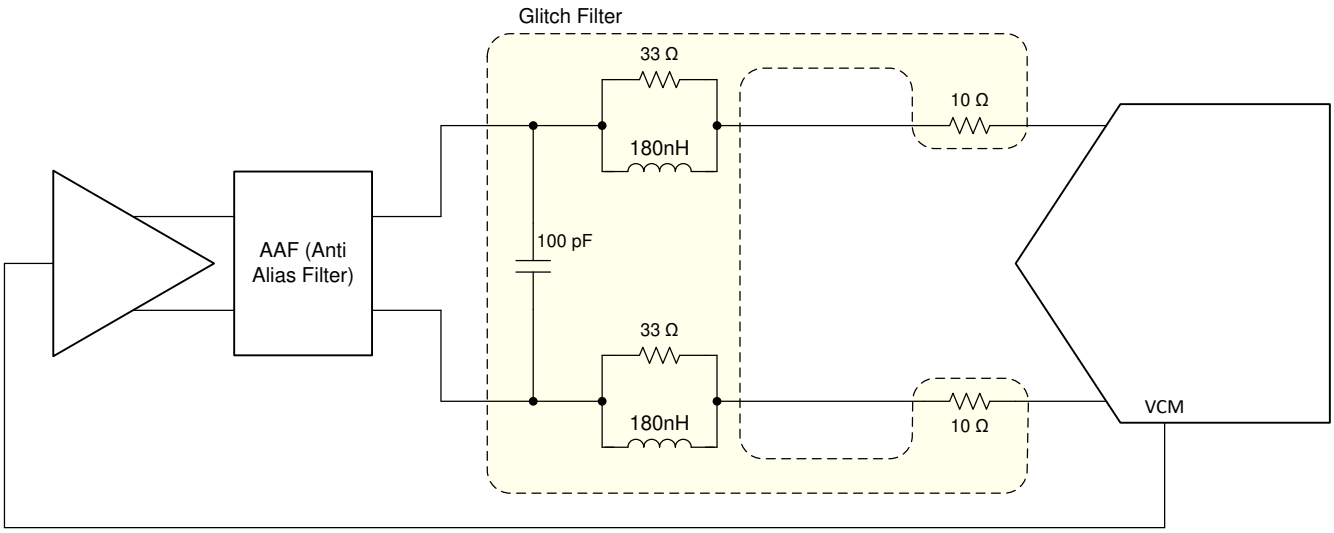

Figure 8-8. DC-Coupling: DC bias provided by FDA (glitch filter example for DC - 30 MHz)

Copyright © 2020 Texas Instruments Incorporated

8.3.1.3 Auto-Zero Feature

The ADC364x includes an internal auto-zero front end amplifier circuit which improves the 1/f flicker noise. This auto-zero feature is enabled by default for the ADC3641/2 and can be enabled using SPI register writes for the ADC3643 (register 0x11, D0).

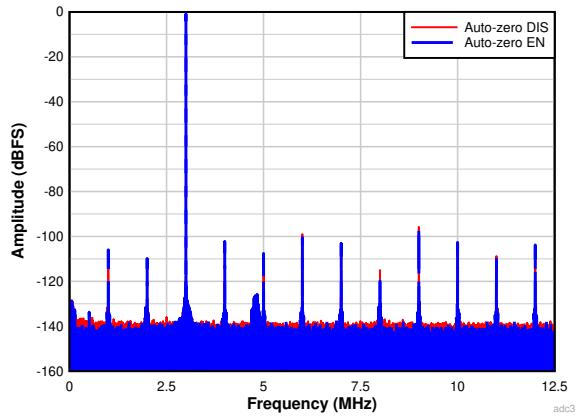

Figure 8-9. FFT at 25 MSPS with input frequency of 3 MHz (auto-zero feature enable vs disable, 4M point FFT)

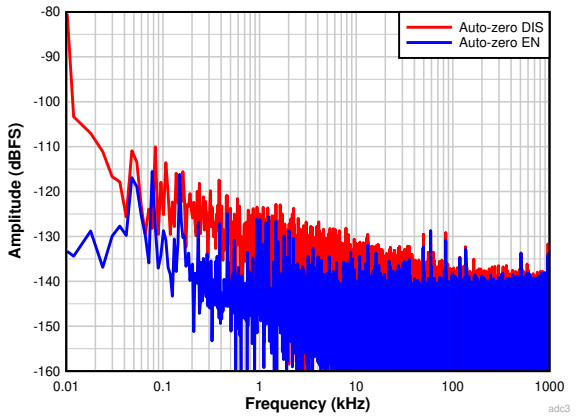

Figure 8-10. FFT at 25 MSPS with input frequency of 3 MHz (auto-zero feature enable vs disable, 4M point FFT)

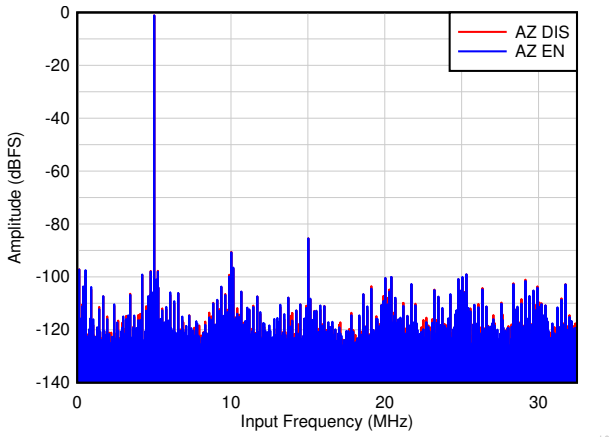

Figure 8-11. ADC3643: FFT at 65 MSPS with input frequency of 5 MHz (auto-zero feature enable vs disable, 4M point FFT)

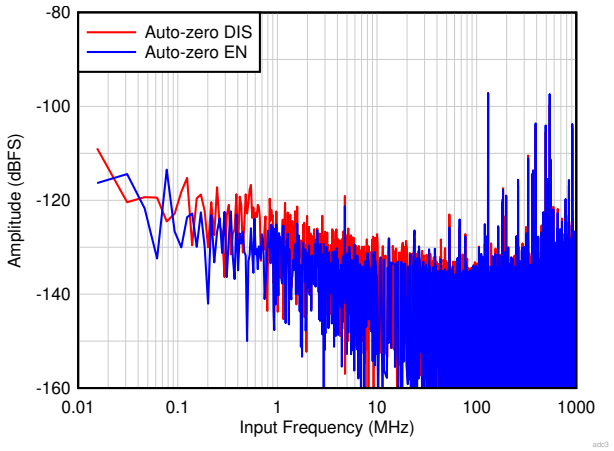

Figure 8-12. ADC3643: FFT at 65 MSPS with input frequency of 5 MHz (auto-zero feature enabled vs disabled, 4M point FFT)

Copyright © 2020 Texas Instruments Incorporated

8.3.2 Clock Input

In order to maximize the ADC SNR performance, the external sampling clock should be low jitter and differential signaling with a high slew rate. This is especially important in IF sampling applications. For less jitter sensitive applications, the ADC364x provides the option to operate with single ended signaling which saves additional power consumption.

8.3.2.1 Single Ended vs Differential Clock Input

The ADC364x can be operated using a differential or a single ended clock input where the single ended clock consumes less power consumption. However clock amplitude impacts the ADC aperture jitter and consequently the SNR. For maximum SNR performance, a large clock signal with fast slew rates needs to be provided.

- Differential Clock Input: The clock input can be AC coupled externally. The ADC364x provides internal biasing for that use case.
- Single Ended Clock Input: This mode needs to be configured using SPI register TBD. In this mode there is no internal clock biasing and thus the clock input needs to be DC coupled around a 0.9V center. The unused input needs to be AC coupled to ground.

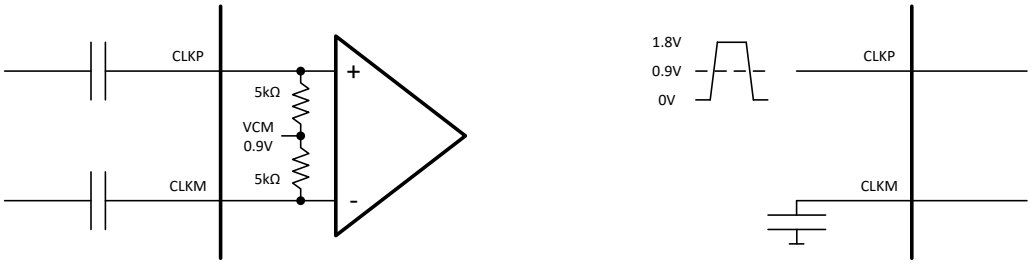

Figure 8-13. External and internal connection using differential (left) and single ended (right) clock input

8.3.2.2 Signal Acquisition Time Adjust

The ADC364x includes a register (DLL PDN (0x11, D2) which increases the signal acquisition time window for clock rates below 40 MSPS from 25% to 50% of the clock period. Increasing the sampling time provides a longer time for the driving amplifier to settle out the signal which can improve the SNR performance of the system.

Note

This register needs to be set for the 65 MSPS speed grade (ADC3643) when operating at sampling rates below 40 MSPS. For the 10 and 25 MSPS device speed grades the sampling time is already set to $T_S/2$.

When powering down the DLL, the acquisition time tracks the clock duty cycle (50% is recommended).

Table 8-1. Acquisition time vs DLL PDN setting

SAMPLING CLOCK F_S (MSPS)	DLL PDN (0x11, D2)	ACQUISITION TIME (t_{ACQ})
65	0	T_S / 4
≤ 40	1	T_S / 2

T_S: Sampling clock period

Copyright © 2020 Texas Instruments Incorporated

8.3.3 Voltage Reference

The ADC364x provides three different options for supplying the voltage reference to the ADC. An external 1.6 V reference can be directly connected to the VREF input; a voltage 1.2 V reference can be connected to the REFBUF input using the internal gain buffer or the internal 1.2 V reference can be enabled to generate a 1.6 V reference voltage. For best performance, the reference noise should be filtered by connecting a 10 µF and a 0.1 µF ceramic bypass capacitor to the VREF pin. The internal reference circuitry of the ADC364x is shown in Figure 8-14.

Note

The voltage reference mode can be selected using SPI writes or by using the REFBUF pin (default) as a control pin (Section 8.5.1).

If the REFBUF pin is not used for configuration, the REFBUF pin should be connected to AVDD (even though the REFBUF pin has a weak internal pullup to AVDD) and the voltage reference option has to be selected using the SPI interface.

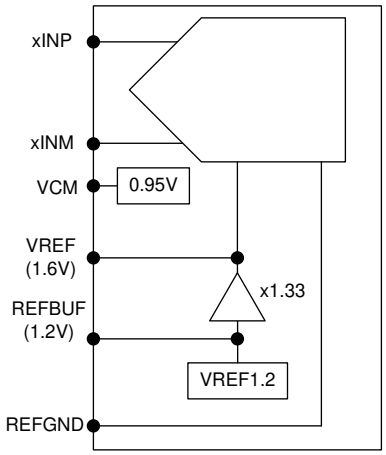

Figure 8-14. Different voltage reference options for ADC364x

8.3.3.1 Internal voltage reference

The 1.6 V reference for the ADC can be generated internal using the on-chip 1.2 V reference along with the internal gain buffer. A 10 µF and a 0.1 µF ceramic bypass capacitor (C_{VREF}) should connected between the VREF and REFGND pins as close to the pins as possible.

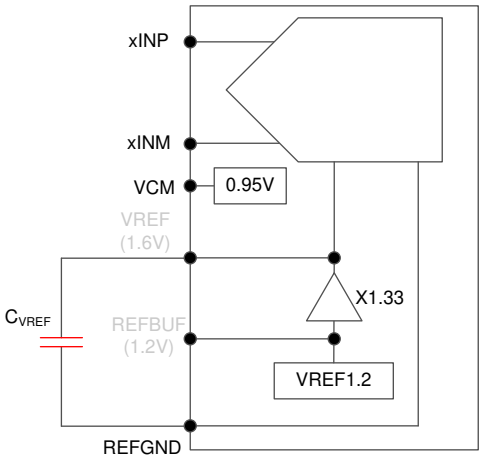

Figure 8-15. Internal reference

8.3.3.2 External voltage reference (VREF)

For highest accuracy and lowest temperature drift, the VREF input can be directly connected to an external 1.6 V reference. A 10 µF and a 0.1 µF ceramic bypass capacitor (C_{VREF}) connected between the VREF and REFGND pins and placed as close to the pins as possible is recommended. The load current from the external reference is about 1 mA.
Note: The internal reference is also used for other functions inside the device; therefore, the reference amplifier should only be powered down in power down state but not during normal operation.

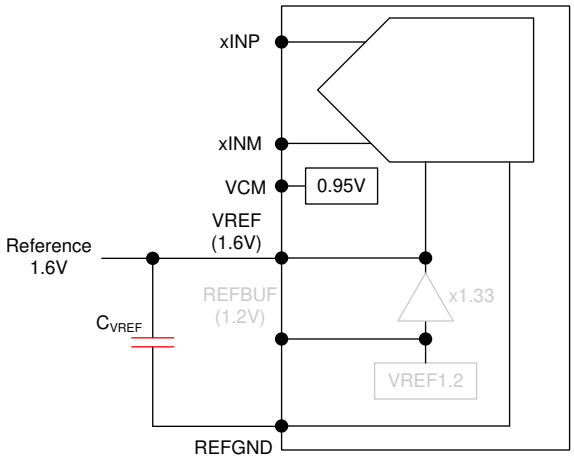

Figure 8-16. External 1.6V reference

8.3.3.3 External voltage reference with internal buffer (REFBUF)

The ADC364x is equipped with an on-chip reference buffer that also includes gain to generate the 1.6 V reference voltage from an external 1.2 V reference. A 10 µF and a 0.1 µF ceramic bypass capacitor (C_{VREF}) between the VREF and REFGND pins and a 10 µF and a 0.1 µF ceramic bypass capacitor between the REFBUF and REFGND pins are recommended. Both capacitors should be placed as close to the pins as possible. The load current from the external reference is less than 100 µA.

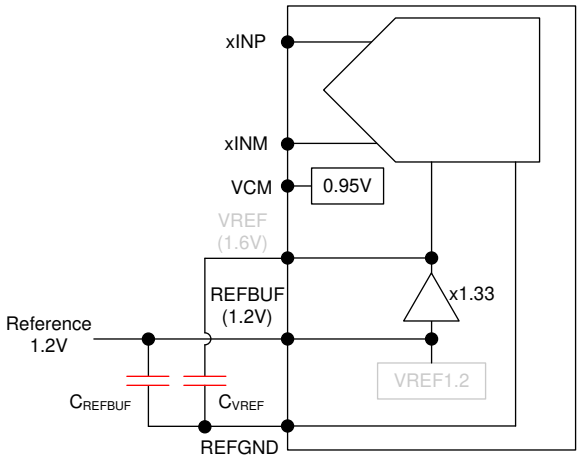

Figure 8-17. External 1.2V reference using internal reference buffer

Copyright © 2020 Texas Instruments Incorporated

8.3.4 Digital Down Converter

The ADC364x includes an optional on-chip digital down conversion (DDC) decimation filter that can be enabled via SPI register setting. It supports complex decimation by 2, 4, 8, 16 and 32 using a digital mixer and a 32-bit numerically controlled oscillator (NCO) as shown in Figure 8-18. Furthermore it supports a mode with real decimation where the complex mixer is bypassed (NCO should be set to 0 for lowest power consumption) and the digital filter acts as a low pass filter.

Internally the decimation filter calculations are performed with a 20-bit resolution in order to avoid any SNR degradation due to quantization noise. The Section 8.3.5.4 truncates to the selected resolution prior to outputting the data on the digital interface.

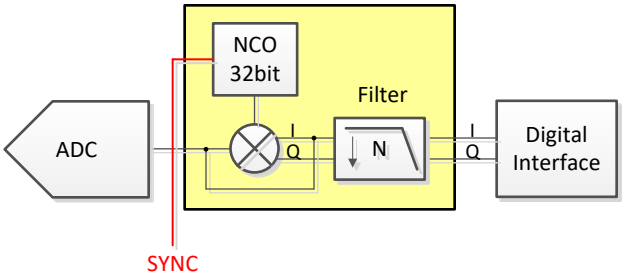

Figure 8-18. Internal Digital Decimation Filter

8.3.4.1 DDC MUX

The ADC364x family contains a MUX in front of the digital decimation filter which allows the ADC channel A input to be connected to the DDC of channel B and vice versa.

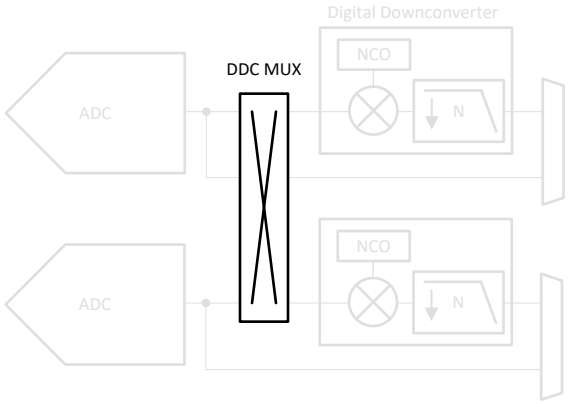

Figure 8-19. DDC MUX

Copyright © 2020 Texas Instruments Incorporated

8.3.4.2 Digital Filter Operation

The complex decimation operation is illustrated with an example in Figure 8-20. First the input signal (and the negative image) are frequency shifted by the NCO frequency as shown on the left. Next a digital filter is applied (centered around 0 Hz) and the output data rate is decimated - in this example the output data rate $F_{S,OUT} = F_S/8$ with a Nyquist zone of $F_S/16$. During the complex mixing the spectrum (signal and noise) is split into real and complex parts and thus the amplitude is reduced by 6-dB. In order to compensate this loss, there is a 6-dB digital gain option in the decimation filter block that can be enabled via SPI write.

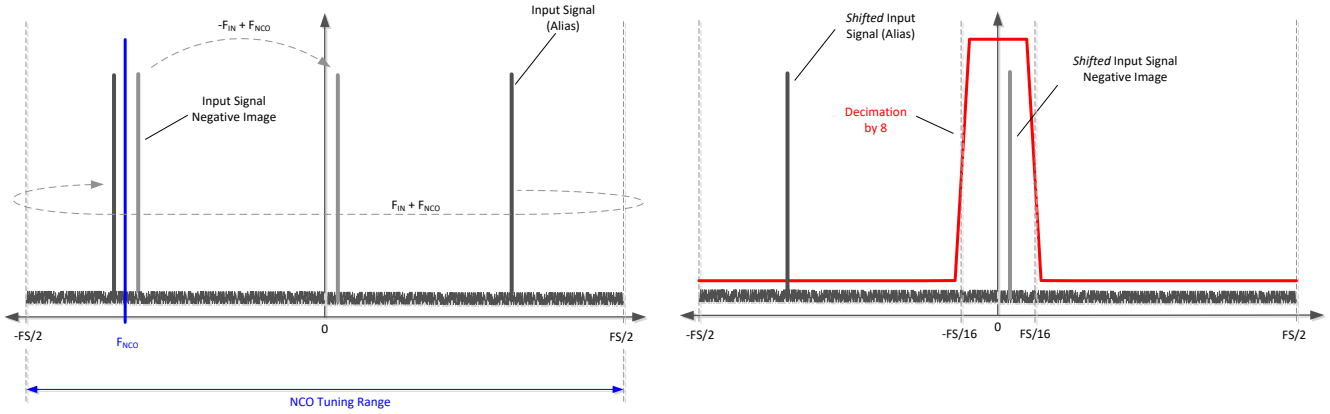

Figure 8-20. Complex decimation illustration

The real decimation operation is illustrated with an example in Figure 8-21. There is no frequency shift happening and only the real portion of the complex digital filter is exercised. The output data rate is decimated - a decimation of 8 would result in an output data rate $F_{S,OUT} = F_S/8$ with a Nyquist zone of $F_S/16$.

During the real mixing the spectrum (signal and noise) amplitude is reduced by 3-dB. In order to compensate this loss, there is a 3-dB digital gain option in the decimation filter block that can be enabled via SPI write.

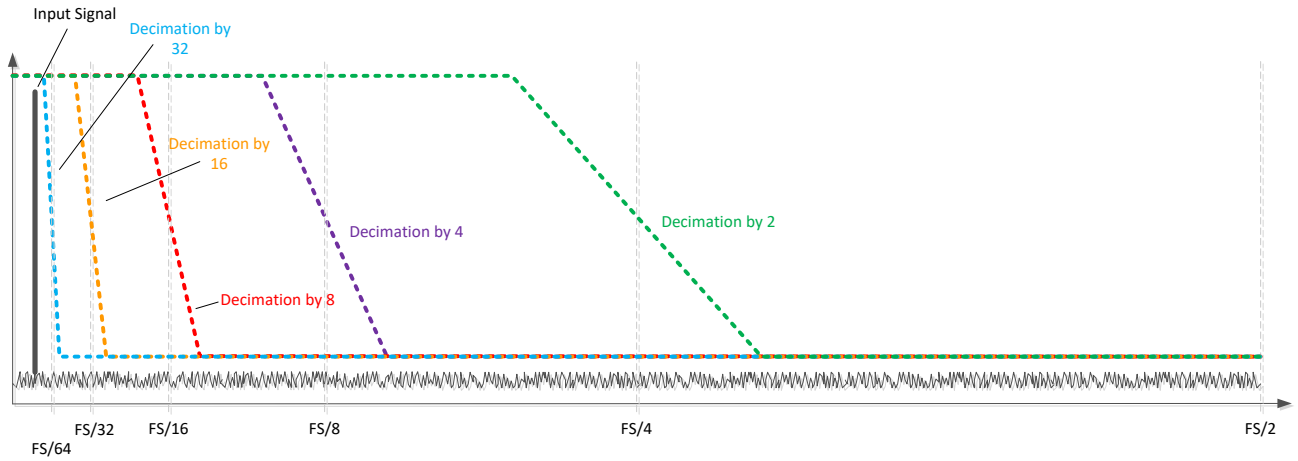

Figure 8-21. Real decimation illustration

Copyright © 2020 Texas Instruments Incorporated

8.3.4.2.1 FS/4 Mixing with Real Output

In this mode, the output after complex decimation gets mixed with FS/4 (FS = output data rate in this case). Instead of a complex output with the input signal centered around 0 Hz, the output is transmitted as a real output at twice the data rate and the signal is centered around FS/4 (Fout/4) as illustrated in Figure 8-22.

In this example, complex decimation by 8 is used. The output data is transmitted as a real output with an output rate of Fout = FS'/4 (FS' = ADC sampling rate). The input signal is now centered around FS/4 (Fout/4) or FS'/16.

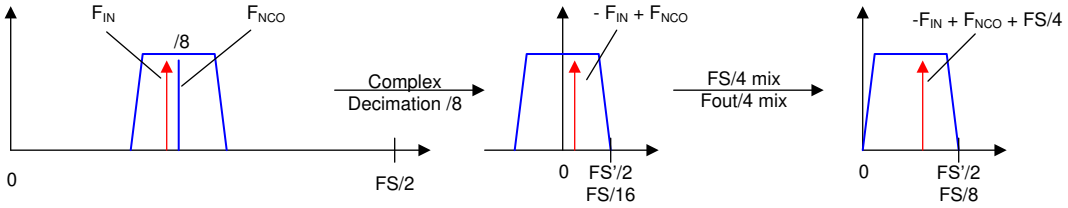

Figure 8-22. FS/4 Mixing with real output

8.3.4.3 Numerically Controlled Oscillator (NCO) and Digital Mixer

The decimation block is equipped with a 32-bit NCO and a digital mixer to fine tune the frequency placement prior to the digital filtering. The oscillator generates a complex exponential sequence of:

$e^{j\omega n}$ (default) or $e^{-j\omega n}$

where: frequency (ω) is specified as a signed number by the 32-bit register setting

The complex exponential sequence is multiplied with the real input from the ADC to mix the desired carrier to a frequency equal to $f_{IN} + f_{NCO}$. The NCO frequency can be tuned from $–F_S/2$ to $+F_S/2$ and is processed as a signed, 2s complement number. After programming a new NCO frequency, the MIXER RESTART register bit or SYNC pin has to be toggled for the new frequency to get active. Additionally the ADC364x provides the option via SPI to invert the mixer phase.

The NCO frequency setting is set by the 32-bit register value given and calculated as:

NCO frequency = 0 to + $F_S/2$: NCO = $f_{NCO} \times 2^{32} / F_S$

NCO frequency = $-F_S/2$ to 0: NCO = $(f_{NCO} + F_S) \times 2^{32} / F_S$

where:

- NCO = NCO register setting (decimal value)
- f_{NCO} = Desired NCO frequency (MHz)
- F_S = ADC sampling rate (MSPS)

The NCO programming is further illustrated with this example:

- ADC sampling rate F_S = 65 MSPS
- Input signal f_{IN} = 10 MHz
- Desired output frequency f_{OUT} = 0 MHz

For this example there are actually four ways to program the NCO and achieve the desired output frequency as shown in Table 8-2.

Table 8-2. NCO value calculations example

Alias or negative image	f_{NCO}	NCO Value	Mixer Phase	Frequency translation for f_{OUT}
f_{IN} = –10 MHz	f_{NCO} = 10 MHz	660764199	as is	$f_{OUT} = f_{IN} + f_{NCO}$ = –10 MHz +10 MHz = 0 MHz
f_{IN} = 10 MHz	f_{NCO} = –10 MHz	3634203097		$f_{OUT} = f_{IN} + f_{NCO}$ = 10 MHz + (–10 MHz) = 0 MHz
f_{IN} = 10 MHz	f_{NCO} = 10 MHz	660764199	inverted	$f_{OUT} = f_{IN} – f_{NCO}$ = 10 MHz – 10 MHz = 0 MHz
f_{IN} = –10 MHz	f_{NCO} = –10 MHz	3634203097		$f_{OUT} = f_{IN} – f_{NCO}$ = –10 MHz – (–10 MHz) = 0 MHz

Copyright © 2020 Texas Instruments Incorporated

8.3.4.4 Decimation Filter

The ADC364x supports complex decimation by 2, 4, 8, 16 and 32 with a pass-band bandwidth of ~ 80% and a stopband rejection of at least 85dB. Table 8-3 gives an overview of the pass-band bandwidth of the different decimation settings with respect to ADC sampling rate FS. In real decimation mode the output bandwidth is half of the complex bandwidth.

Table 8-3. Decimation Filter Summary and Maximum Available Output Bandwidth

REAL/COMPLEX DECIMATION	DECIMATION SETTING N	OUTPUT RATE	OUTPUT BANDWIDTH	OUTPUT RATE (FS = 65 MSPS)	OUTPUT BANDWIDTH (FS = 65 MSPS)
Complex	2	FS / 2 complex	0.8 × FS / 2	32.5 MSPS complex	26 MHz
	4	FS / 4 complex	0.8 × FS / 4	16.25 MSPS complex	13 MHz
	8	FS / 8 complex	0.8 × FS / 8	8.125 MSPS complex	6.5 MHz
	16	FS / 16 complex	0.8 × FS / 16	4.0625 MSPS complex	3.25 MHz
	32	FS / 32 complex	0.8 × FS / 32	2.03125 MSPS complex	1.625 MHz
Real	2	FS / 2 real	0.4 × FS / 2	32.5 MSPS	13 MHz
	4	FS / 4 real	0.4 × FS / 4	16.25 MSPS	6.5 MHz
	8	FS / 8 real	0.4 × FS / 8	8.125 MSPS	3.25 MHz
	16	FS / 16 real	0.4 × FS / 16	4.0625 MSPS	1.625 MHz
	32	FS / 32 real	0.4 × FS / 32	2.03125 MSPS	0.8125 MHz

The decimation filter responses normalized tot he ADC sampling clock frequency are illustrated in . They are interpreted as follows:

Each figure contains the filter pass-band, transition band(s) and alias or stop-band(s) as shown in Figure 8-24 to Figure 8-33. The x-axis shows the offset frequency (after the NCO frequency shift) normalized to the ADC sampling rate F_S.

For example, in the divide-by-4 complex setup, the output data rate is F_S / 4 complex with a Nyquist zone of F_S / 8 or 0.125 × F_S. The transition band is centered around 0.125 × F_S and the alias transition band is centered at 0.375 × F_S (colored in blue). The stop-bands, which alias on top of the pass-band, are centered at 0.25 × F_S and 0.5 × F_S and are colored in red. The stop-band attenuation is greater than 85 dB.

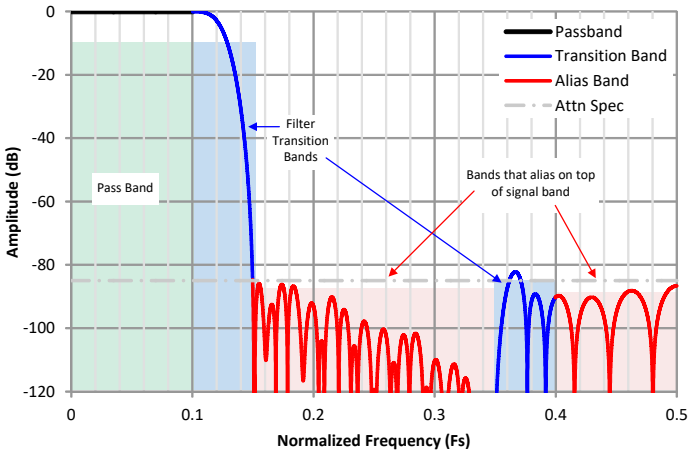

Figure 8-23. Interpretation of the Decimation Filter Plots

Copyright © 2020 Texas Instruments Incorporated

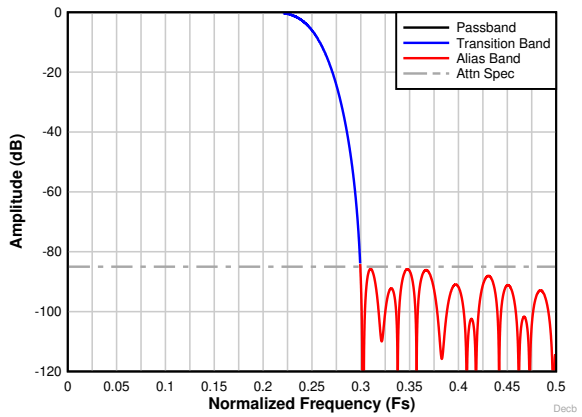

Figure 8-24. Decimation by 2 complex frequency response

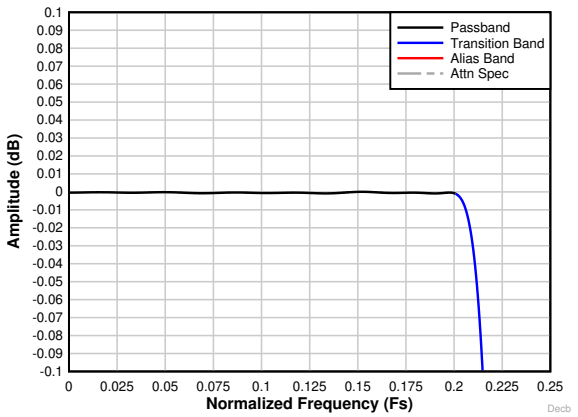

Figure 8-25. Decimation by 2 complex passband ripple response

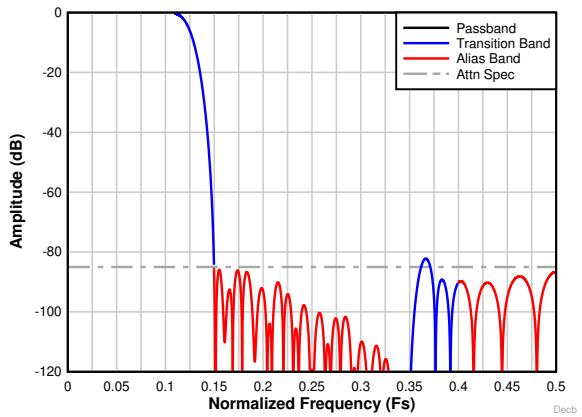

Figure 8-26. Decimation by 4 complex frequency response

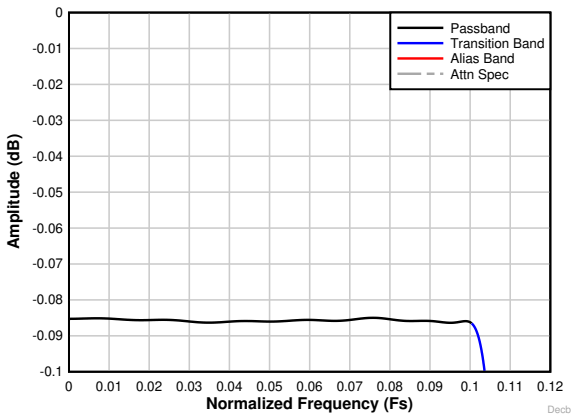

Figure 8-27. Decimation by 4 complex passband ripple response

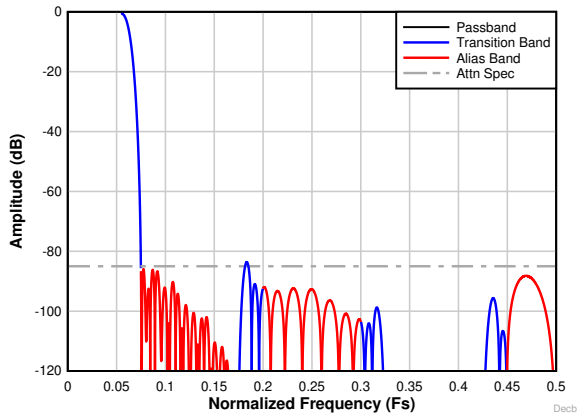

Figure 8-28. Decimation by 8 complex frequency response

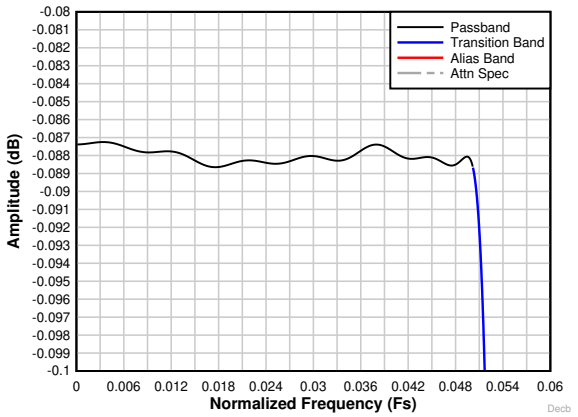

Figure 8-29. Decimation by 8 complex passband ripple response

Copyright © 2020 Texas Instruments Incorporated

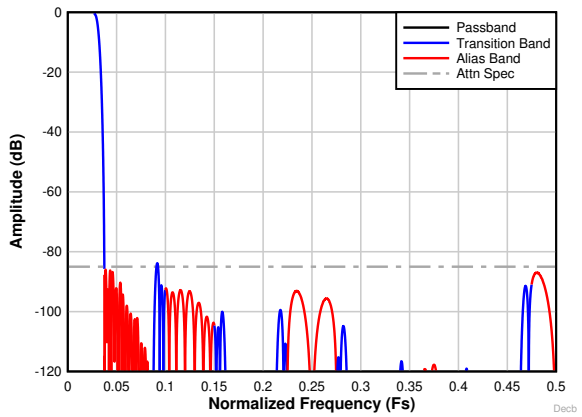

Figure 8-30. Decimation by 16 complex frequency response

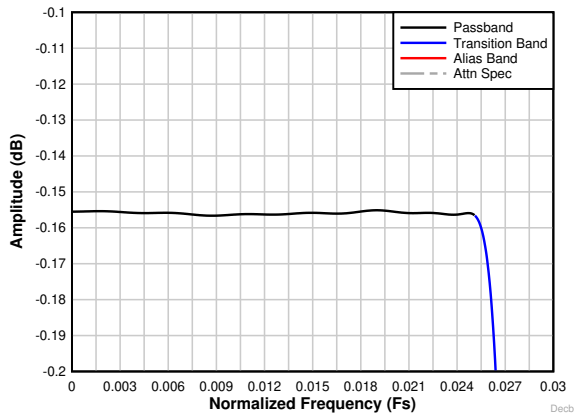

Figure 8-31. Decimation by 16 complex passband ripple response

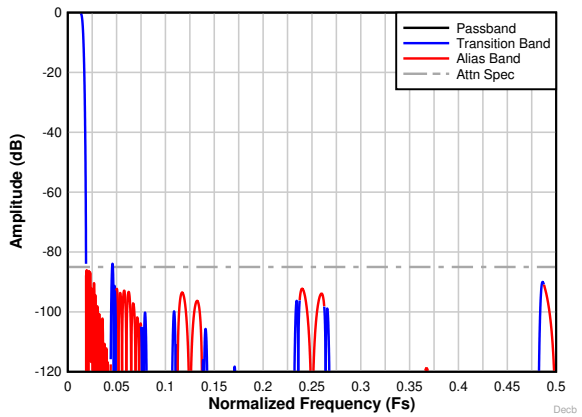

Figure 8-32. Decimation by 32 complex frequency response

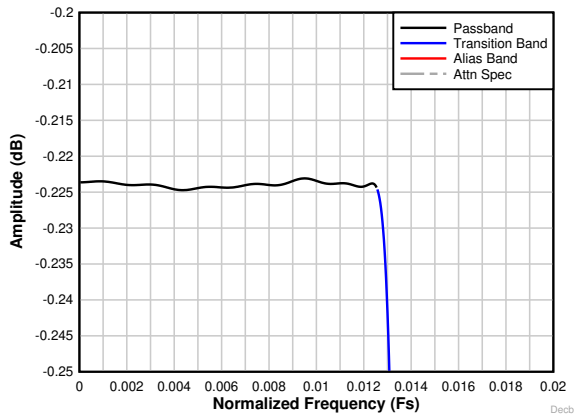

Figure 8-33. Decimation by 32 complex passband ripple response

8.3.4.5 SYNC

The PDN/SYNC pin can be used to synchronize multiple devices using an external SYNC signal. The PDN/SYNC pin can be configured via SPI (SYNC EN bit) from power down to synchronization functionality and is latched in by the rising edge of the sampling clock as shown in Figure 8-34.

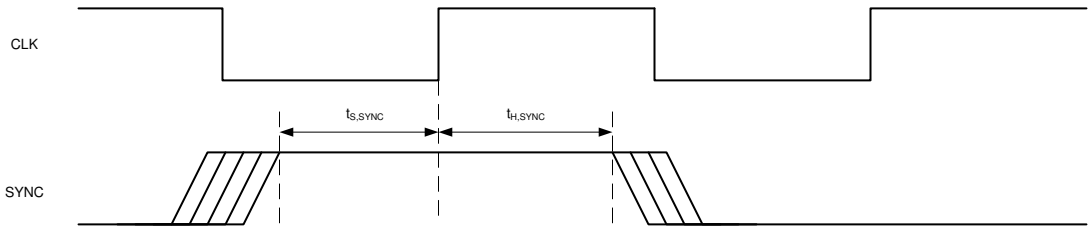

Figure 8-34. External SYNC timing diagram

The synchronization signal is only required when using the decimation filter - either using the SPI SYNC register or the PDN/SYNC pin. It resets internal clock dividers used in the decimation filter and aligns the internal clocks as well as I and Q data within the same sample. If no SYNC signal is given the internal clock dividers will not be synchronized, which can lead to a fractional delay across different devices. The SYNC signal also resets the NCO phase and loads the new NCO frequency (same as the MIXER RESTART bit).

When trying to resynchronize during operation, the SYNC toggle should occur at 64*K clock cycles, where K is an integer. This ensures phase continuity of the clock divider.

Copyright © 2020 Texas Instruments Incorporated

8.3.4.6 Output Formatting with Decimation

8.3.4.6.1 Parallel CMOS

In parallel CMOS mode, the ADC364x device only supports real output with DDR CMOS interface as shown in Figure 8-35 (real decimation). Here the output format is selected to 14-bit since the parallel output bus only supports up to 14-bit.

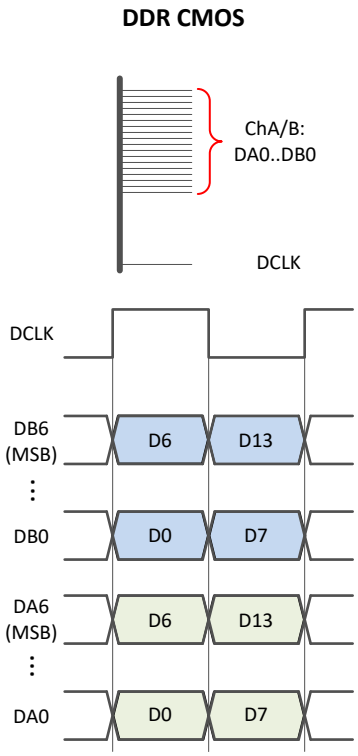

Figure 8-35. Output Data Format in Real Decimation

Table 8-4 illustrates the output interface data rate along with the corresponding DCLK frequency based on real decimation setting (M).

Furthermore the table shows an actual lane rate example with complex decimation by 4.

Table 8-4. Parallel CMOS Data Rate Examples with Decimation

REAL/COMPLEX DECIMATION	DECIMATION SETTING	ADC SAMPLING RATE	DDR CMOS	DCLK	DOUT
Real	M	F_S	DDR	F_S / M	F_S x 2 / M
	4	65 MHz	DDR	16.25 MHz	32.5 MHz

Copyright © 2020 Texas Instruments Incorporated

8.3.4.6.2 Serialized CMOS

In serialized CMOS mode, the ADC364x device supports complex decimation output Figure 8-36 and real decimation output Figure 8-37. The examples are shown for 16-bit output for 2-wire (8x serialization) and 1-wire (16x serialization).

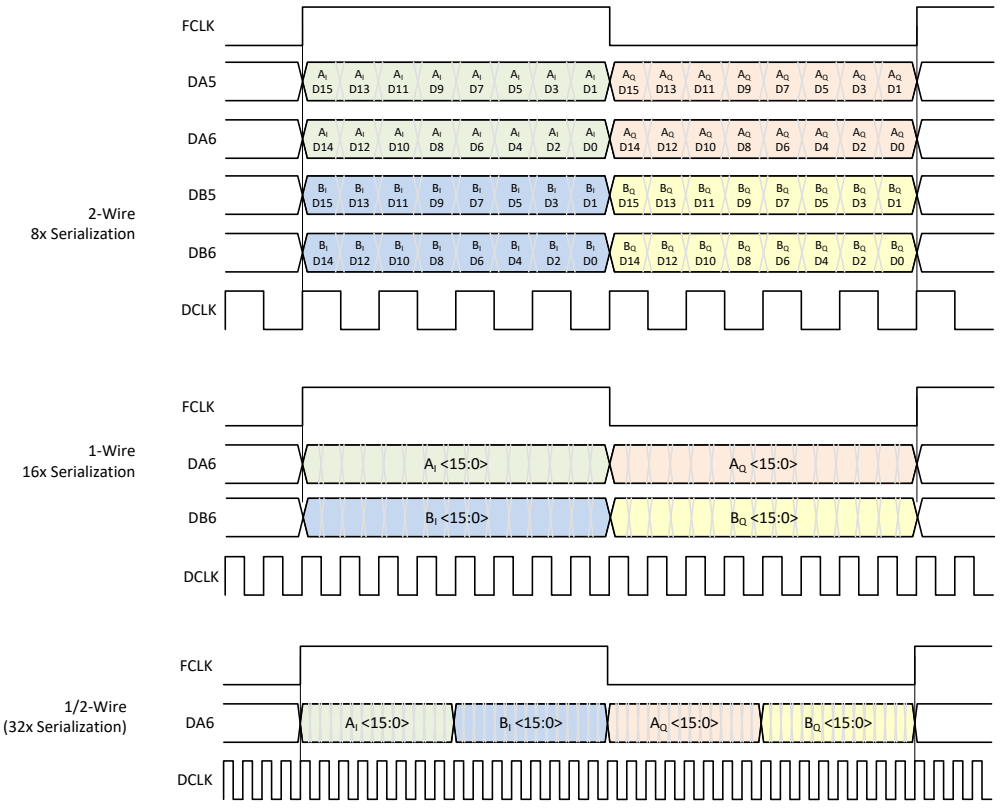

Figure 8-36. Output Data Format in Complex Decimation

Table 8-5 illustrates the output interface data rate along with the corresponding DCLK/DCLKIN and FCLK frequencies based on output resolution (R), number of serial CMOS lanes (L) and complex decimation setting (N).

Furthermore the table shows an actual lane rate example for the 2-, 1- and 1/2-wire interface, 16-bit output resolution and complex decimation by 16.

Table 8-5. Serial CMOS Lane Rate Examples with Complex Decimation and 16-bit Output Resolution

DECIMATION SETTING	ADC SAMPLING RATE	OUTPUT RESOLUTION	# of WIRES	FCLK	DCLKIN, DCLK	DOUT
N	F_S	R	L	F_S / N	[DOUT] / 2	F_S x 2 x R / L / N
16	65 MSPS	16	2	4.0625 MHz	32.5 MHz	65 MHz
			1		65 MHz	130 MHz
	62.5 MSPS		1/2	3.90625 MHz	125 MHz	250 MHz

Copyright © 2020 Texas Instruments Incorporated

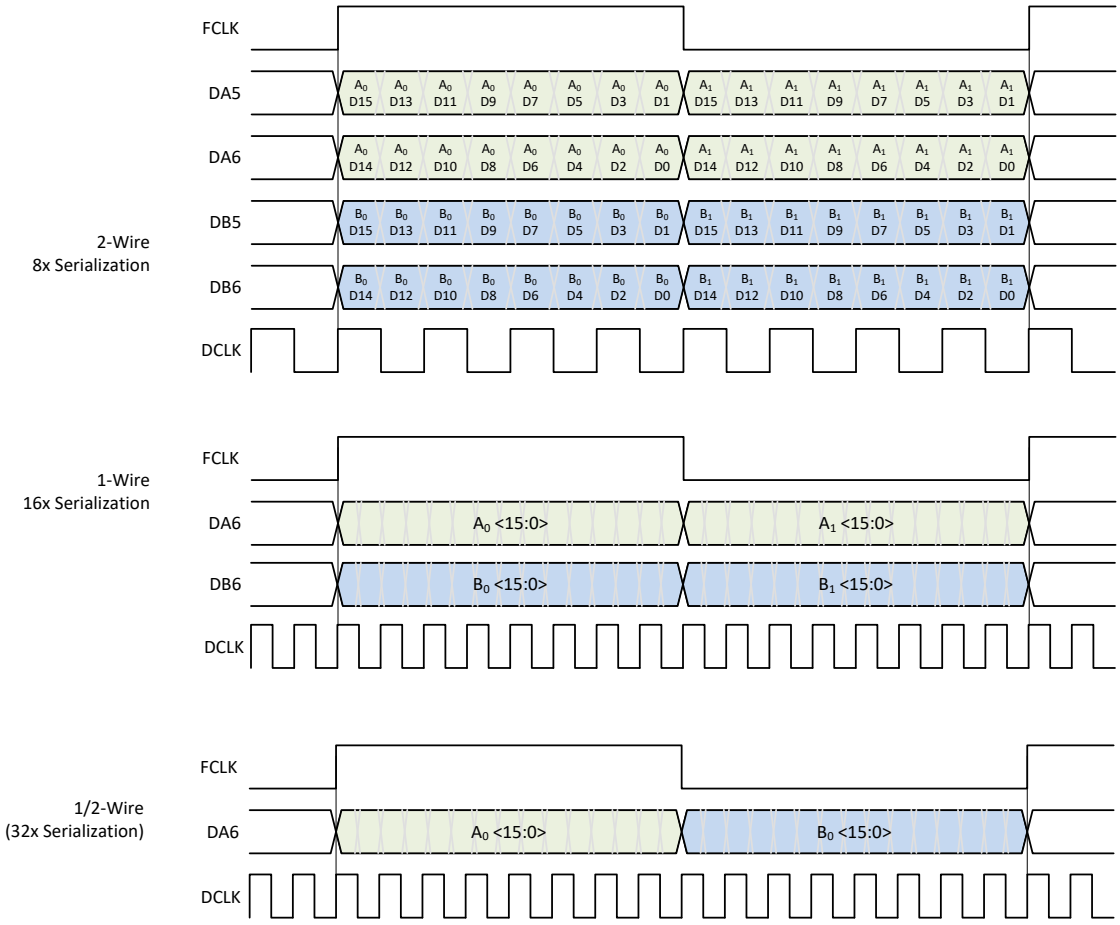

Figure 8-37. Output Data Format in Real Decimation

Table 8-6 illustrates the output interface data rate along with the corresponding DCLK/DCLKIN and FCLK frequencies based on output resolution (R), number of serial CMOS lanes (L) and real decimation setting (M).

Furthermore the table shows an actual lane rate example for the 2-, 1- and 1/2-wire interface, 16-bit output resolution and real decimation by 16.

Table 8-6. Serial CMOS Lane Rate Examples with Real Decimation and 16-bit Output Resolution

DECIMATION SETTING	ADC SAMPLING RATE	OUTPUT RESOLUTION	# of WIRES	FCLK	DCLKIN, DCLK	DOUT
M	F_S	R	L	F_S / M / 2 (L = 2) F_S / M (L = 1, 1/2)	[DOUT] / 2	F_S x R / L / M
16	65 MSPS	16	2	2.03125 MHz	16.25 MHz	32.5 MHz
			1	4.0625 MHz	32.5 MHz	65 MHz
			1/2		65 MHz	130 MHz

Copyright © 2020 Texas Instruments Incorporated

8.3.5 Digital Interface

The ADC364x family supports two different CMOS output modes - parallel DDR output and serialized CMOS output formats.

8.3.5.1 Parallel CMOS Output

The low power CMOS interface supports a double data rate (DDR) output interface. In DDR output mode the output clock is generated inside the ADC364x. The digital interface can be configured using SPI register writes.

8.3.5.2 Serialized CMOS output

In this mode the output data is serialized and transmitted over 2, 1 or 1/2 wires. Due to CMOS output speed limitation this mode is only available for reduced output data rates. This mode is similar to the multi-SPI interface.

In this operating mode, the ADC364x requires an external serial clock input (DCLKIN), which is used to transmit the data out of the ADC along with the data clock (DCLK). The phase relationship between DCLKIN and the sampling clock is irrelevant but both clocks need to be frequency locked. The serial CMOS interface is configured using SPI register writes.

8.3.5.2.1 SDR Output Clocking

The ADC364x provides a SDR output clocking option for all serial CMOS output modes (including decimation) which is enabled using the SPI interface. In serial CMOS mode by default the data is output on rising and falling edge of DCLK. In SDR clocking mode, DCLKIN has to be twice as fast as the default DCLKIN so that the output data are clocked out only on DCLK rising edge.

Internally DCLKIN is divided by 2 for data processing and this operation can add 1 extra clock cycle latency to the ADC latency.

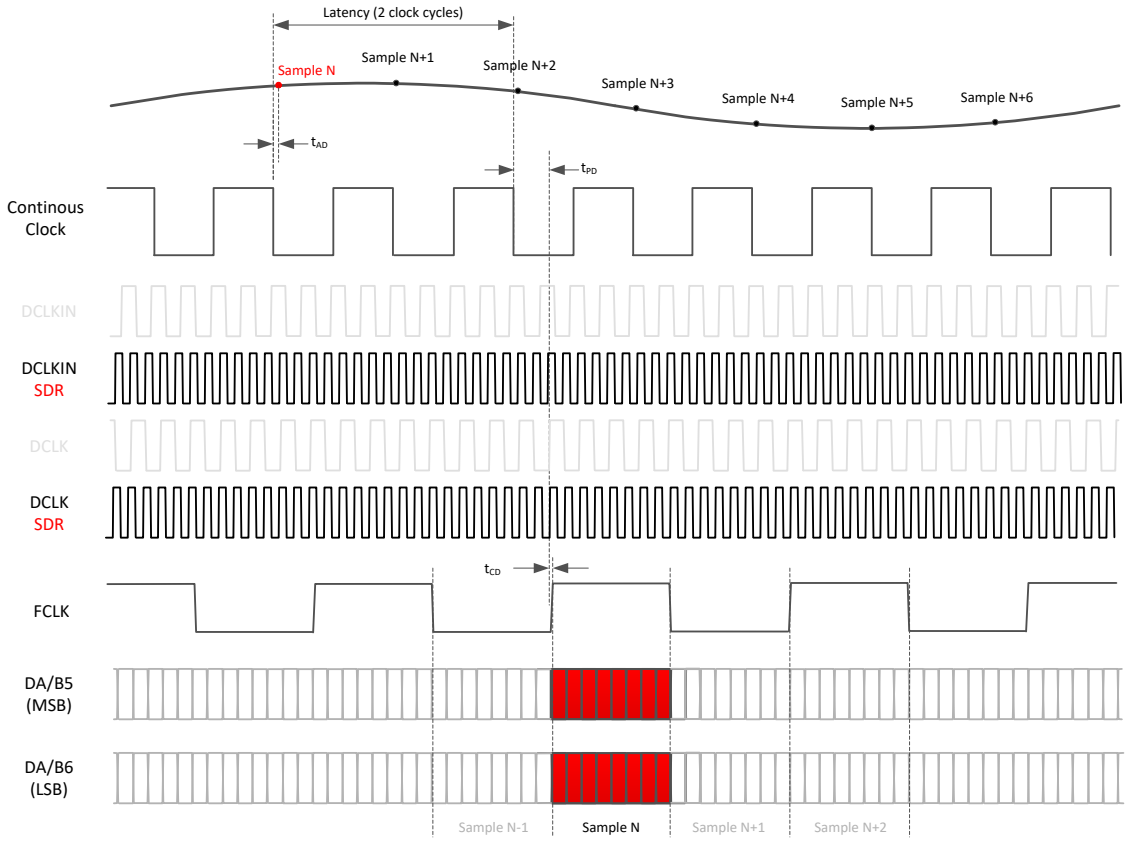

Figure 8-38. SDR Output Clocking

Copyright © 2020 Texas Instruments Incorporated

8.3.5.3 Output Data Format

The output data can be configured to two's complement (default) or offset binary formatting using SPI register writes (register 0x8F and 0x92). Table 8-7 provides an overview for minimum and maximum output codes for the two formatting options. The actual output resolution is set by the output bit mapper.

Table 8-7. Overview of minimum and maximum output codes vs output resolution for different formatting

	Two's Complement (default)		Offset Binary	
RESOLUTION (BIT)	**14**	**16**	**14**	**16**
$V_{IN,MAX}$	0x1FFF	0x7FFF	0x3FFF	0xFFFF
0	0x0000		0x2000	0x8000
$V_{IN,MIN}$	0x2000	0x8000	0x0000	

8.3.5.4 Output Formatter

The digital output interface utilizes a flexible output bit mapper as shown in Figure 8-39. The bit mapper takes the 14-bit output directly from the ADC or from digital filter block and reformats it to a resolution of 14, 16, 18 or 20-bit. With parallel output format the maximum output resolution supported is 14-bit. With serial CMOS output the output serialization factor gets adjusted accordingly for 2-, 1- and 1/2-wire interface mode. When using a higher resolution output in non-decimation mode, the 2 LSBs are set to 0. The maximum output data rate can not be exceeded independently of output resolution and serialization factor.

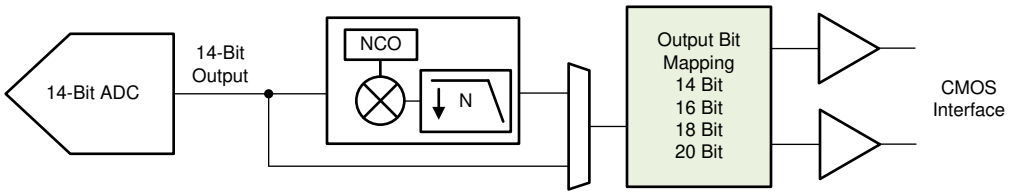

Figure 8-39. Interface output bit mapper

Table 8-8 provides an overview for the resulting serialization factor depending on output resolution and output modes. Note that the DCLKIN frequency needs to be adjusted accordingly as well. Changing the output resolution to 16-bit, 2-wire mode for example would result in DCLKIN = F_S * 4 instead of * 3.5.

The output bit mapper can be used for bypass and decimation filter.

Table 8-8. Serialization factor vs output resolution for different output modes

OUTPUT RESOLUTION	Interface	SERIALIZATION	FCLK	DCLKIN	DCLK	D0/D1
14-bit (default)	2-Wire	7x	F_S/2	F_S* 3.5	F_S* 3.5	F_S* 7
	1-Wire	14x	F_S	F_S* 7	F_S* 7	F_S* 14
	½-Wire	28x	F_S	F_S* 14	F_S* 14	F_S* 28
16-bit	2-Wire	8x	F_S/2	F_S* 4	F_S* 4	F_S* 8
	1-Wire	16x	F_S	F_S* 8	F_S* 8	F_S* 16
	½-Wire	32x	F_S	F_S* 16	F_S* 16	F_S* 32
18-bit	2-Wire	9x	F_S/2	F_S* 4.5	F_S* 4.5	F_S* 9
	1-Wire	18x	F_S	F_S* 9	F_S* 9	F_S* 18
	½-Wire	36x	F_S	F_S* 18	F_S* 18	F_S* 36
20-bit	2-Wire	10x	F_S/2	F_S* 5	F_S* 5	F_S* 10
	1-Wire	20x	F_S	F_S* 10	F_S* 10	F_S* 20
	½-Wire	40x	F_S	F_S* 20	F_S* 20	F_S* 40

The programming sequence to change the output interface and/or resolution from default settings is shown in Section 8.3.5.5.

Copyright © 2020 Texas Instruments Incorporated

8.3.5.5 Output Interface/Mode Configuration

The following sequence summarizes all the relevant registers for changing the output interface and/or enabling the decimation filter. Steps 1 and 2 must come first since the E-Fuse load reset the SPI writes, the remaining steps can come in any order.

Table 8-9. Configuration steps for changing interface or decimation

<table>
<tr><th>STEP</th><th>FEATURE</th><th>ADDRESS</th><th>DESCRIPTION</th></tr>
<tr><td rowspan="5">1</td><td rowspan="19">Output Interface</td><td rowspan="5">0x07</td><td>Select the output interface bit mapping depending on resolution and output interface.</td></tr>
<tr><td>
<table>
<tr><th>Output Resolution</th><th>DDR</th><th>2-wire</th><th>1-wire</th><th>1/2-wire</th></tr>
<tr><td>14-bit</td><td rowspan="2">0xA9</td><td>0x2B</td><td rowspan="4">0x6C</td><td rowspan="4">0x8D</td></tr>
<tr><td>16-bit</td><td>0x4B</td></tr>
<tr><td>18-bit</td><td>N/A</td><td>0x2B</td></tr>
<tr><td>20-bit</td><td>N/A</td><td>0x4B</td></tr>
</table>
</td></tr>
<tr><td>2</td><td>0x13</td><td>Load the output interface bit mapping using the E-fuse loader (0x13, D0). Program register 0x13 to 0x01, wait ~ 1ms so that bit mapping is loaded properly followed by 0x13 0x00</td></tr>
<tr><td>3</td><td>0x0A/B/C</td><td>When changing the output interface bit mapper (0x07), the CMOS output buffer register has to be configured again.</td></tr>
<tr><td>4</td><td>0x18</td><td>For serial CMOS modes, DCLKIN EN (D4) needs to be enabled.</td></tr>
<tr><td rowspan="2">5</td><td rowspan="2">0x19</td><td>In serial CMOS, configure the FCLK registers based on bypass/decimation and # of lanes used.</td></tr>
<tr><td>
<table>
<tr><th>Bypass/Decimation</th><th>SCMOS</th><th>FCLK SRC (D7)</th><th>FCLK DIV (D4)</th><th>TOG FCLK (D0)</th></tr>
<tr><td rowspan="3">Bypass/ Real Decimation</td><td>2-wire</td><td>0</td><td>1</td><td>0</td></tr>
<tr><td>1-wire</td><td>0</td><td>0</td><td>0</td></tr>
<tr><td>1/2-wire</td><td>0</td><td>0</td><td>0</td></tr>
<tr><td rowspan="3">Complex Decimation</td><td>2-wire</td><td>1</td><td>0</td><td>0</td></tr>
<tr><td>1-wire</td><td>1</td><td>0</td><td>0</td></tr>
<tr><td>1/2-wire</td><td>0</td><td>0</td><td>1</td></tr>
</table>
</td></tr>
<tr><td>6</td><td>0x1B</td><td>Select the output interface resolution using the bit mapper (D5-D3).</td></tr>
<tr><td>7</td><td>0x1F</td><td>For serial CMOS modes, DCLKIN EN (D6) and DCLK OB EN (D4) need to be enabled.</td></tr>
<tr><td rowspan="2">8</td><td rowspan="2">0x20
0x21
0x22</td><td>In serial CMOS, select the FCLK pattern for decimation for proper duty cycle output of the FCLK.</td></tr>
<tr><td>
<table>
<tr><th>Decimation</th><th>Output Resolution</th><th>2-wire</th><th>1-wire</th><th>1/2-wire</th></tr>
<tr><td rowspan="4">Real Decimation</td><td>14-bit</td><td rowspan="8">use default</td><td>0xFE000</td><td rowspan="4">use default</td></tr>
<tr><td>16-bit</td><td>0xFF000</td></tr>
<tr><td>18-bit</td><td>0xFF800</td></tr>
<tr><td>20-bit</td><td>0xFFC00</td></tr>
<tr><td rowspan="4">Complex Decimation</td><td>14-bit</td><td rowspan="4">0xFFFFF</td><td rowspan="4">0xFFFFF</td></tr>
<tr><td>16-bit</td></tr>
<tr><td>18-bit</td></tr>
<tr><td>20-bit</td></tr>
</table>
</td></tr>
<tr><td>9</td><td rowspan="5">Decimation Filter</td><td>0x24</td><td>Enable the decimation filter</td></tr>
<tr><td>10</td><td>0x25</td><td>Configure the decimation filter</td></tr>
<tr><td>11</td><td>0x2A/B/C/D
0x31/2/3/4</td><td>Program the NCO frequency for complex decimation (can be skipped for real decimation)</td></tr>
<tr><td rowspan="4">12</td><td rowspan="4">0x27
0x2E</td><td>Configure the complex output data stream (set both bits to 0 for real decimation)</td></tr>
<tr><td>
<table>
<tr><th>Serial CMOS</th><th>OP-Order (D4)</th><th>Q-Delay (D3)</th></tr>
<tr><td>2-wire</td><td>1</td><td>0</td></tr>
<tr><td>1-wire</td><td>0</td><td>1</td></tr>
<tr><td>1/2-wire</td><td>1</td><td>1</td></tr>
</table>
</td></tr>
<tr><td>13</td><td>0x26</td><td>Set the mixer gain and toggle the mixer reset bit to update the NCO frequency.</td></tr>
</table>

Copyright © 2020 Texas Instruments Incorporated

8.3.5.5.1 Configuration Example

The following is a step by step programming example to configure the ADC364x to complex decimation by 8 with 1-wire serial CMOS and 16-bit output.

1. 0x07 (address) 0x6C (load bit mapper configuration for 16-bit output with 1-wire serial CMOS)
2. 0x13 0x01, wait 1 ms, 0x13 0x00 (load e-fuse)
3. 0x0A 0xFF, 0x0B 0xEE, 0x0C 0xFD (Power down unused CMOS output buffers to avoid contention)
4. 0x18 0x10 (DCLKIN EN for serial CMOS mode)
5. 0x19 0x82 (configure FCLK)
6. 0x1B 0x88 (select 16-bit output resolution)
7. 0x1F 0x50 (DCLKIN EN for serial CMOS mode)
8. 0x20 0xFF, 0x21 0xFF, 0x22 0x0F (configure FCLK pattern)
9. 0x24 0x06 (enable decimation filter)
10. 0x25 0x30 (configure complex decimation by 8)
11. 0x2A/B/C/D and 0x31/32/33/34 (program NCO frequency)
12. 0x27/0x2E 0x08 (configure Q-delay register bit)
13. 0x26 0xAA, 0x26 0x88 (set digital mixer gain to 6-dB and toggle the mixer update)

8.3.6 Test Pattern

In order to enable in-circuit testing of the digital interface, the following test patterns are supported and enabled via SPI register writes (0x14/0x15/0x16). In decimation mode (real and complex), the test patterns replace the output data of the DDC - however channel A controls the test patterns for both channels.

- RAMP Pattern: The step size needs to be configured in the CUSTOM PAT register according to the native resolution of the ADC. When selecting a higher output resolution then the additional LSBs will still be 0 in RAMP pattern mode.
  - 00001: 18-bit output resolution
  - 00100: 16-bit output resolution
  - 10000: 14-bit output resolution
- Custom Pattern: Configured in the CUSTOM PAT register

Copyright © 2020 Texas Instruments Incorporated

8.4 Device Functional Modes

8.4.1 Normal operation

In normal operating mode, the entire ADC full scale range gets converted to a digital output with 14-bit resolution. The output is available in as little as 1 clock cycle on the digital CMOS outputs.

8.4.2 Power Down Options

A global power down mode can be enabled via SPI as well as using the power down pin (PDN/SYNC). There is an internal pull-down 21 kΩ resistor on the PDN/SYNC input pin and the pin is active high - so the pin needs to be pulled high externally to enter global power down mode.

The SPI register map provides the capability to enable/disable individual blocks directly or via PDN pin mask in order to trade off power consumption vs wake up time as shown in Table 8-10.

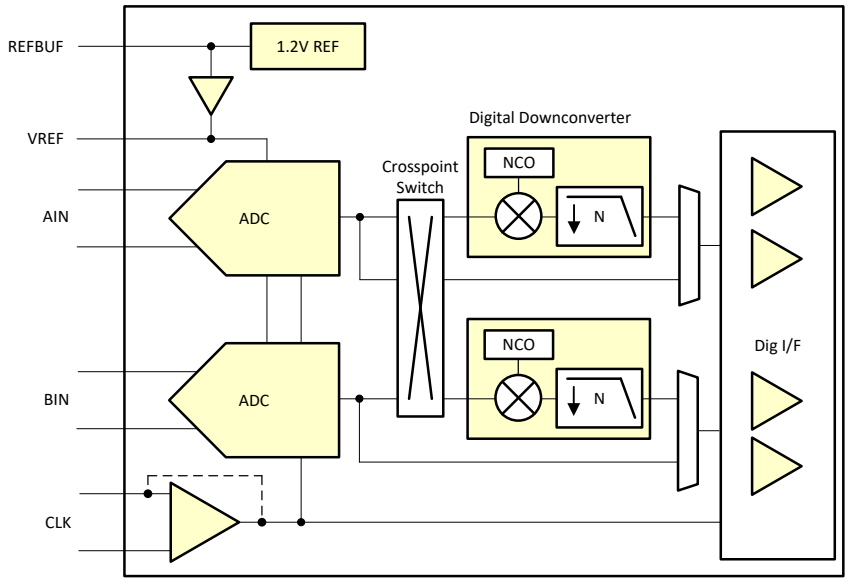

Figure 8-40. Power Down Configurations

Table 8-10. Overview of Power Down Options

Function/ Register	PDN via SPI	Mask for Global PDN	Feature - Default	Power Impact	Wake-up time	Comment
ADC	Yes	-	Enabled			Both ADC channels are included in Global PDN automatically
Reference gain amplifier	Yes	Yes	Enabled	~ 0.4 mA	~3 us	Should only be powered down in power down state.
Internal 1.2 V reference	Yes		External ref	~ 1-3.5 mA	~3 ms	Internal/external reference selection is available through SPI and REFBUF pin.
Clock buffer	Yes		Differential clock	~ 1 mA	n/a	Single ended clock input saves ~ 1mA compared to differential. Some programmability is available through the REFBUF pin.
Output interface drivers	Yes	-	Enabled	varies	n/a	Depending on output interface mode, unused output drivers can be powered down for maximum power savings
Decimation filter	Yes	-	Disabled	see electrical table	n/a	

Copyright © 2020 Texas Instruments Incorporated

8.5 Programming

The device is primarily configured and controlled using the serial programming interface (SPI) however it can operate in a default configuration without requiring the SPI interface. Furthermore the power down function as well as internal/external reference configuration is possible via pin control (PDN/SYNC pin).

Note

The power down command (via PIN or SPI) only goes in effect with the ADC sampling clock present.

8.5.1 Configuration using PINs only

The ADC voltage reference can be selected using the REFBUF pin. Even though there is an internal 100 kΩ pull-up resistor to AVDD, the REFBUF pin should be set to a voltage externally and not left floating.

Table 8-11. REFBUF voltage levels control voltage reference selection

REFBUF VOLTAGE	VOLTAGE REFERENCE OPTION	CLOCKING OPTION	Digital Interface
> 1.7 V (Default)	External reference	Differential clock input	DDR CMOS
1.2 V (1.15-1.25V)	External 1.2V input on REFBUF pin using internal gain buffer	Differential clock input	DDR CMOS
0.5 - 0.7V	Internal reference	Differential clock input	DDR CMOS
< 0.1V	Internal reference	Single ended clock input	Serial CMOS 2-wire

8.5.2 Configuration using the SPI interface

The device has a set of internal registers that can be accessed by the serial interface formed by the SEN (serial interface enable), SCLK (serial interface clock) and SDIO (serial interface data input/output) pins. Serially shifting bits into the device is enabled when SEN is low. Serial data input are latched at every SCLK rising edge when SEN is active (low). The serial data are loaded into the register at every 24th SCLK rising edge when SEN is low. When the word length exceeds a multiple of 24 bits, the excess bits are ignored. Data can be loaded in multiples of 24-bit words within a single active SEN pulse. The interface can function with SCLK frequencies from 12 MHz down to very low speeds (of a few hertz) and also with a non-50% SCLK duty cycle.

8.5.2.1 Register Write

The internal registers can be programmed following these steps:

1. Drive the SEN pin low
2. Set the R/W bit to 0 (bit A15 of the 16-bit address) and bits A[14:12] in address field to 0.
3. Initiate a serial interface cycle by specifying the address of the register (A[11:0]) whose content is written and
4. Write the 8-bit data that are latched in on the SCLK rising edges

Figure 8-41 shows the timing requirements for the serial register write operation.

Copyright © 2020 Texas Instruments Incorporated

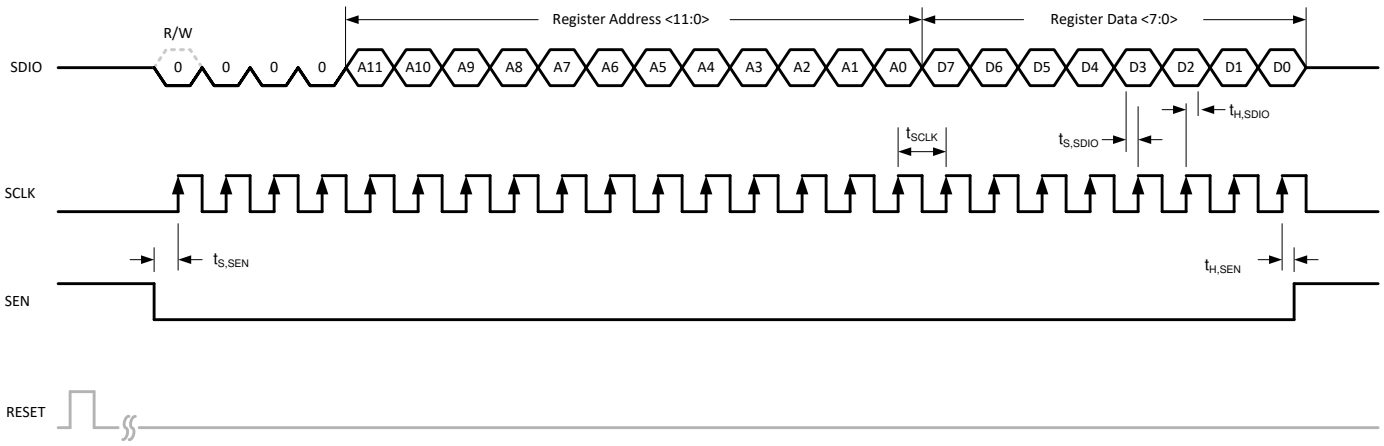

Figure 8-41. Serial Register Write Timing Diagram

8.5.2.2 Register Read

The device includes a mode where the contents of the internal registers can be read back using the SDIO pin. This readback mode can be useful as a diagnostic check to verify the serial interface communication between the external controller and the ADC. The procedure to read the contents of the serial registers is as follows:

1. Drive the SEN pin low
2. Set the R/W bit (A15) to 1. This setting disables any further writes to the registers. Set A[14:12] in address field to 0.
3. Initiate a serial interface cycle specifying the address of the register (A[11:0]) whose content must be read
4. The device outputs the contents (D[7:0]) of the selected register on the SDIO pin
5. The external controller can latch the contents at the SCLK falling edge

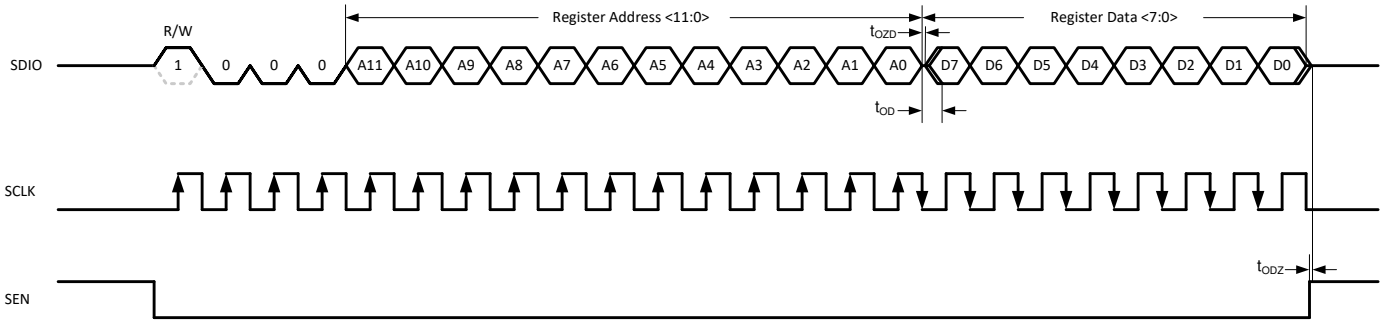

Figure 8-42. Serial Register Read Timing Diagram

Copyright © 2020 Texas Instruments Incorporated

8.6 Register Maps

Table 8-12. Register Map Summary

REGISTER ADDRESS	REGISTER DATA							
A[11:0]	D7	D6	D5	D4	D3	D2	D1	D0
0x00	0	0	0	0	0	0	0	RESET
0x07	OP IF MAPPER			0	OP IF EN	OP IF SEL		
0x08	0	0	PDN CLKBUF	PDN REFAMP	0	PDN A	PDN B	PDN GLOBAL
0x0A	CMOS OB DIS [7:0]							
0x0B	CMOS OB DIS [15:8]							
0x0C	CMOS OB DIS [23:16]							
0x0D	0	0	0	0	MASK CLKBUF	MASK REFAMP	MASK BG DIS	0
0x0E	SYNC PIN EN	SPI SYNC	SPI SYNC EN	0	REF CTRL	REF SEL		SE CLK EN
0x11	0	0	SE A	SE B	0	DLL PDN	0	AZ EN
0x13	0	0	0	0	0	0	0	E-FUSE LD
0x14	CUSTOM PAT [7:0]							
0x15	CUSTOM PAT [15:8]							
0x16	TEST PAT B			TEST PAT A			CUSTOM PAT [17:16]	
0x18	0	0	0	DCLKIN EN	0	0	0	0
0x19	FCLK SRC	0	0	FCLK DIV	0	0	FCLK EN	TOG FCLK
0x1B	MAPPER EN	20B EN	BIT MAPPER RES			0	0	0
0x1E	0	0	CMOS DCLK DEL		0	0	0	0
0x1F	LOW DR EN	DCLKIN EN	0	DCLK OB EN	2X DCLK	0	0	0
0x20	FCLK PAT [7:0]							
0x21	FCLK PAT [15:8]							
0x22	0	0	0	0	FCLK PAT [19:16]			
0x24	0	0	CH AVG EN	DDC MUX		DIG BYP	DDC EN	0
0x25	DDC MUX EN	DECIMATION			REAL OUT	0	0	MIX PHASE
0x26	MIX GAIN A		MIX RES A	FS/4 MIX A	MIX GAIN B		MIX RES B	FS/4 MIX B
0x27	0	0	0	OP ORDER A	Q-DEL A	FS/4 MIX PH A	0	0
0x2A	NCO A [7:0]							
0x2B	NCO A [15:8]							
0x2C	NCO A [23:16]							
0x2D	NCO A [31:24]							
0x2E	0	0	0	OP ORDER B	Q-DEL B	FS/4 MIX PH B	0	0
0x31	NCO B [7:0]							
0x32	NCO B [15:8]							
0x33	NCO B [23:16]							
0x34	NCO B [31:24]							
0x8F	0	0	0	0	0	0	FORMAT A	0
0x92	0	0	0	0	0	0	FORMAT B	0

Copyright © 2020 Texas Instruments Incorporated

8.6.1 Detailed Register Description

Figure 8-43. Register 0x00

7	6	5	4	3	2	1	0
0	0	0	0	0	0	0	RESET
R/W-0	R/W-0	R/W-0	R/W-0	R/W-0	R/W-0	R/W-0	R/W-0

Table 8-13. Register 0x00 Field Descriptions

Bit	Field	Type	Reset	Description
7-1	0	R/W	0	Must write 0
0	RESET	R/W	0	This bit resets all internal registers to the default values and self clears to 0.

Figure 8-44. Register 0x07

7	6	5	4	3	2	1	0
OP IF MAPPER			0	OP IF EN	OP IF SEL		
R/W-0	R/W-0	R/W-0	R/W-0	R/W-0	R/W-0	R/W-0	R/W-0

Table 8-14. Register 0x07 Field Descriptions

Bit	Field	Type	Reset	Description
7-5	OP IF MAPPER	R/W	000	Output interface mapper. This register contains the proper output interface bit mapping for the different interfaces. The interface bit mapping is internally loaded from e-fuses and also requires a fuse load command to go into effect (0x13, D0). Register 0x07 along with the E-Fuse Load (0x13, D0) needs to be loaded first in the programming sequence since the E-Fuse load resets the SPI writes. After initial reset the default output interface variant is loaded automatically from fuse internally. However when reading back this register reads 000 until a value is written using SPI. 001: 2-wire, 18 and 14-bit 010: 2-wire, 16-bit 011: 1-wire 100: 0.5-wire 101: DDR others: not used
4	0	R/W	0	Must write 0
3	OP IF EN	R/W	0	Enables changing the default output interface mode (D2-D0).
2-0	OP IF SEL	R/W	000	Selection of the output interface mode. OP IF EN (D3) needs to be enabled also. After initial reset the default output interface is loaded automatically from fuse internally. However when reading back this register reads 000 until a value is written using SPI. 001: DDR CMOS 011: 2-wire 100: 1-wire 101: 0.5-wire others: not used

Copyright © 2020 Texas Instruments Incorporated

Figure 8-45. Register 0x08

7	6	5	4	3	2	1	0
0	0	PDN CLKBUF	PDN REFAMP	0	PDN A	PDN B	PDN GLOBAL
R/W-0	R/W-0	R/W-0	R/W-0	R/W-0	R/W-0	R/W-0	R/W-0

Table 8-15. Register 0x08 Field Descriptions

Bit	Field	Type	Reset	Description
7-6	0	R/W	0	Must write 0
5	PDN CLKBUF	R/W	0	Powers down sampling clock buffer 0: Clock buffer enabled 1: Clock buffer powered down
4	PDN REFAMP	R/W	0	Powers down internal reference gain amplifier 0: REFAMP enabled 1: REFAMP powered down
3	0	R/W	0	Must write 0
2	PDN A	R/W	0	Powers down ADC channel A 0: ADC channel A enabled 1: ADC channel A powered down
1	PDN B	R/W	0	Powers down ADC channel B 0: ADC channel B enabled 1: ADC channel B powered down
0	PDN GLOBAL	R/W	0	Global power down via SPI 0: Global power disabled 1: Global power down enabled. Power down mask (register 0x0D) determines which internal blocks are powered down.

Copyright © 2020 Texas Instruments Incorporated

Figure 8-46. Register 0x0A/B/C

7	6	5	4	3	2	1	0
CMOS OB DIS [23:0]							
R/W-0	R/W-0	R/W-0	R/W-0	R/W-0	R/W-0	R/W-0	R/W-0

Table 8-16. Register 0x0A/B/C Field Descriptions

Bit	Field	Type	Reset	Description
7:0	CMOS OB DIS [23:0]	R/W	0	These register bits power down the individual CMOS output buffers. See Table 8-17 for the actual bit to pin mapping. Unused pins should be powered down (ie set to 1) for maximum power savings. Even though unused outputs don't toggle there is still a small amount of static power (< 1mA) that can be saved by disabling the output buffers. There is a separate control to enable the DCLKIN buffer in register 0x1F (D6) and 0x18 (D4). DCLK output buffer is powered down using register 0x1F (D4). NOTE: When using serial CMOS interface the CMOS output buffer (0x0A, D3 (DB1)) has to be powered down because it shares the pin with DCLKIN. 0: Output buffer enabled 1: Output buffer powered down

Table 8-17. Output buffer enable bit mapping vs output interface mode

ADDRESS (HEX)	BIT	PIN NAME	DDR CMOS	SCMOS 2-w	SCMOS 1-w	SCMOS 1/2-w
0x0A	D7	DB5	DB5	DB5	-	-
	D6	DB4	DB4	-	-	-
	D5	-	-	-	-	-
	D4	DB2	DB2	-	-	-
	D3	DB1	DB1	DCLKIN	DCLKIN	DCLKIN
	D2	DB0	DB0	-	-	-
	D1/D0	-	-	-	-	-
	Register setting		0x23	0x7F	0xFF	0xFF
0x0B	D7	DA4	DA4	-	-	-
	D6	-	-	-	-	-
	D5	DA2	DA2	-	-	-
	D4	DA1	DA1	FCLK	FCLK	FCLK
	D3	DA0	DA0	-	-	-
	D2/D1	-	-	-	-	-
	D0	DB6	DB6	DB6	DB6	-
	Register setting		0x46	0xEE	0xEE	0xEF
0x0C	D7/D6/D5/D4	-	-	-	-	-
	D3	DA3	DA3	-	-	-
	D2	DB3	DB3	-	-	-
	D1	DA6	DA6	DA6	DA6	DA6
	D0	DA5	DA5	DA5	-	-
	Register setting		0xF0	0xFC	0xFD	0xFD

Copyright © 2020 Texas Instruments Incorporated

Figure 8-47. Register 0x0D (PDN GLOBAL MASK)

7	6	5	4	3	2	1	0
0	0	0	0	MASK CLKBUF	MASK REFAMP	MASK BG DIS	0
R/W-0	R/W-0	R/W-0	R/W-0	R/W-0	R/W-0	R/W-0	R/W-0

Table 8-18. Register 0x0D Field Descriptions

Bit	Field	Type	Reset	Description
7-4	0	R/W	0	Must write 0
3	MASK CLKBUF	R/W	0	Global power down mask control for sampling clock input buffer. 0: Clock buffer will get powered down when global power down is exercised. 1: Clock buffer will NOT get powered down when global power down is exercised.
2	MASK REFAMP	R/W	0	Global power down mask control for reference amplifier. 0: Reference amplifier will get powered down when global power down is exercised. 1: Reference amplifier will NOT get powered down when global power down is exercised.
1	MASK BG DIS	R/W	0	Global power down mask control for internal 1.2V bandgap voltage reference. Setting this bit reduces power consumption in global power down mode but increases the wake up time. See the power down option overview. 0: Internal 1.2V bandgap voltage reference will NOT get powered down when global power down is exercised. 1: Internal 1.2V bandgap voltage reference will get powered down when global power down is exercised.
0	0	R/W	0	Must write 0

Copyright © 2020 Texas Instruments Incorporated

Figure 8-48. Register 0x0E

7	6	5	4	3	2	1	0
SYNC PIN EN	SPI SYNC	SPI SYNC EN	0	REF CTL	REF SEL		SE CLK EN
R/W-0	R/W-0	R/W-0	R/W-0	R/W-0	R/W-0	R/W-0	R/W-0

Table 8-19. Register 0x0E Field Descriptions

Bit	Field	Type	Reset	Description
7	SYNC PIN EN	R/W	0	This bit controls the functionality of the SYNC/PDN pin. 0: SYNC/PDN pin exercises global power down mode when pin is pulled high. 1: SYNC/PDN pin issues the SYNC command when pin is pulled high.
6	SPI SYNC	R/W	0	Toggling this bit issues the SYNC command using the SPI register write. SYNC using SPI must be enabled as well (D5). This bit doesn't self reset to 0. 0: Normal operation 1: SYNC command issued.
5	SPI SYNC EN	R/W	0	This bit enables synchronization using SPI instead of the SYNC/PDN pin. 0: Synchronization using SPI register bit disabled. 1: Synchronization using SPI register bit enabled.
4	0	R/W	0	Must write 0
3	REF CTL	R/W	0	This bit determines if the REFBUF pin controls the voltage reference selection or the SPI register (D2-D1). 0: The REFBUF pin selects the voltage reference option. 1: Voltage reference is selected using SPI (D2-D1) and single ended clock using D0.
2-1	REF SEL	R/W	00	Selects of the voltage reference option. REF CTRL (D3) must be set to 1. 00: Internal reference 01: External voltage reference (1.2V) using internal reference buffer (REFBUF) 10: External voltage reference 11: not used
0	SE CLK EN	R/W	0	Selects single ended clock input and powers down the differential sampling clock input buffer. REF CRTL (D3) must be set to 1. 0: Differential clock input 1: Single ended clock input

Copyright © 2020 Texas Instruments Incorporated

Figure 8-49. Register 0x11

7	6	5	4	3	2	1	0
0	0	SE A	SE B	0	DLL PDN	0	AZ EN
R/W-0	R/W-0	R/W-0	R/W-0	R/W-0	R/W-0	R/W-0	R/W-0

Table 8-20. Register 0x11 Field Descriptions

Bit	Field	Type	Reset	Description
7-6	0	R/W	0	Must write 0
5	SE A	R/W	0	This bit enables single ended analog input, channel A. In this mode the SNR reduces by 3-dB. 0: Differential input 1: Single ended input
4	SE B	R/W	0	This bit enables single ended analog input, channel B. In this mode the SNR reduces by 3-dB. 0: Differential input 1: Single ended input
3	0	R/W	0	Must write 0
2	DLL PDN	R/W	0	This register applies ONLY to the ADC3643. It powers down the internal DLL, which is used to adjust the sampling time. This register must only be enabled when operating at sampling rates below 40 MSPS. When DLL PDN bit is enabled the sampling time is directly dependent on sampling clock duty cycle (with a 50/50 duty the sampling time is $T_S/2$). 0: Sampling time is $T_S/4$ 1: Sampling time is $T_S/2$ (only for sampling rates below 40 MSPS).
1	0	R/W	0	Must write 0
0	AZ EN	R/W	0/1	This bit enables the internal auto-zero circuitry. It is enabled by default for the ADC3641/42 and disabled for the ADC3643. 0: Auto-zero disabled 1: Auto-zero enabled

Figure 8-50. Register 0x13

7	6	5	4	3	2	1	0
0	0	0	0	0	0		E-FUSE LD
R/W-0	R/W-0	R/W-0	R/W-0	R/W-0	R/W-0	R/W-0	R/W-0

Table 8-21. Register 0x13 Field Descriptions

Bit	Field	Type	Reset	Description
7-1	0	R/W	0	Must write 0
0	E-FUSE LD	R/W	0	This register bit loads the internal bit mapping for different interfaces. After setting the interface in register 0x07, this E-FUSE LD bit needs to be set to 1 and reset to 0 for loading to go into effect. Register 0x07 along with the E-Fuse Load (0x12, D0) needs to be loaded first in the programming sequence since the E-Fuse load resets the SPI writes. 0: E-FUSE LOAD set 1: E-FUSE LOAD reset

Copyright © 2020 Texas Instruments Incorporated

Figure 8-51. Register 0x14/15/16

7	6	5	4	3	2	1	0
CUSTOM PAT [7:0]							
CUSTOM PAT [15:8]							
TEST PAT B			TEST PAT A			CUSTOM PAT [17:16]	
R/W-0	R/W-0	R/W-0	R/W-0	R/W-0	R/W-0	R/W-0	R/W-0

Table 8-22. Register 0x14/15/16 Field Descriptions

Bit	Field	Type	Reset	Description
7-0	CUSTOM PAT [17:0]	R/W	00000000	This register is used for two purposes: • It sets the constant custom pattern starting from MSB • It sets the RAMP pattern increment step size. 00001: Ramp pattern for 18-bit ADC 00100: Ramp pattern for 16-bit ADC 10000: Ramp pattern for 14-bit ADC
7-5	TEST PAT B	R/W	000	Enables test pattern output mode for channel B (NOTE: The test pattern is set prior to the bit mapper and is based on native resolution of the ADC starting from the MSB). These work in either output format.
				000: Normal output mode (test pattern output disabled) 010: Ramp pattern: need to set proper increment using CUSTOM PAT register 011: Constant Pattern using CUSTOM PAT [17:0] in register 0x14/15/16. others: not used
4-2	TEST PAT A	R/W	000	Enables test pattern output mode for channel A (NOTE: The test pattern is set prior to the bit mapper and is based on native resolution of the ADC starting from the MSB). These work in either output format.
				000: Normal output mode (test pattern output disabled) 010: Ramp pattern: need to set proper increment using CUSTOM PAT register 011: Constant Pattern using CUSTOM PAT [17:0] in register 0x14/15/16. others: not used

Figure 8-52. Register 0x18

7	6	5	4	3	2	1	0
0	0	0	DCLKIN EN	0	0	0	0
R/W-0	R/W-0	R/W-0	R/W-0	R/W-0	R/W-0	R/W-0	R/W-0

Table 8-23. Register 0x18 Field Descriptions

Bit	Field	Type	Reset	Description
7-5	0	R/W	0	Must write 0
4	DCLKIN EN	R/W	0	This bit enables the DCLKIN clock input buffer for serial CMOS modes. Also DCLKIN EN (0x1F, D6) needs to be set as well. 0: DCLKIN buffer powered down. 1: DCLKIN buffer enabled.
3-0	0	R/W	0	Must write 0

Copyright © 2020 Texas Instruments Incorporated

Figure 8-53. Register 0x19

7	6	5	4	3	2	1	0
FCLK SRC	0	0	FCLK DIV	0	0	FCLK EN	TOG FCLK
R/W-0	R/W-0	R/W-0	R/W-0	R/W-0	R/W-0	R/W-0	R/W-0

Table 8-24. Register 0x19 Field Descriptions

Bit	Field	Type	Reset	Description
7	FCLK SRC	R/W	0	User has to select if FCLK signal comes from ADC or from DDC block. Here real decimation is treated same as bypass mode 0: FCLK generated from ADC. FCLK SRC set to 0 for DDC bypass, real decimation mode and 1/2-w complex decimation mode. 1: FCLK generated from DDC block. In complex decimation mode only this bit needs to be set for 2-w and 1-w output interface mode but NOT for 1/2-w mode.
6-5	0	R/W	0	Must write 0
4	FCLK DIV	R/W	0	This bit needs to be set to 1 for 2-w output mode in bypass mode only (non decimation). 0: All output interface modes except 2-w bypass mode.. 1: 2-w output interface mode.
3-2	0	R/W	0	Must write 0
1	FCLK EN	R/W	0	This bit enables FCLK output for CMOS output. 0: Data output pin is used for parallel output data. 1: Data output pin is used for FCLK output in serialized CMOS mode.
0	TOG FCLK	R/W	0	This bit adjusts the FCLK signal appropriately for 1/2-wire mode where FCLK is stretched to cover channel A and channel B. This bit ONLY needs to be set in 1/2-wire mode with complex decimation mode. 0: all other modes. 1: FCLK for 1/2-wire complex decimation mode.

Table 8-25. Configuration of FCLK SRC and FCLK DIV Register Bits vs Serial Interface

BYPASS/DECIMATION	SERIAL INTERFACE	FCLK SRC	FCLK DIV	TOG FCLK
Decimation Bypass/ Real Decimation	2-wire	0	1	0
	1-wire	0	0	0
	1/2-wire	0	0	0
Complex Decimation	2-wire	1	0	0
	1-wire	1	0	0
	1/2-wire	0	0	1

Copyright © 2020 Texas Instruments Incorporated

Figure 8-54. Register 0x1B

7	6	5	4	3	2	1	0
MAPPER EN	20B EN	BIT MAPPER RES			0	0	0
R/W-0	R/W-0	R/W-0	R/W-0	R/W-0	R/W-0	R/W-0	R/W-0

Table 8-26. Register 0x1B Field Descriptions

Bit	Field	Type	Reset	Description
7	MAPPER EN	R/W	0	This bit enables changing the resolution of the output (including output serialization factor) in bypass mode only. This bit is not needed for 20-bit resolution output. 0: Output bit mapper disabled. 1: Output bit mapper enabled.
6	20B EN	R/W	0	This bit enables 20-bit output resolution which can be useful for very high decimation settings so that quantization noise doesn't impact the ADC performance. 0: 20-bit output resolution disabled. 1: 20-bit output resolution enabled.
5-3	BIT MAPPER RES	R/W	000	Sets the output resolution using the bit mapper. MAPPER EN bit (D6) needs to be enabled when operating in bypass mode.. 000: 18 bit 001: 16 bit 010: 14 bit all others, n/a
2-0	0	R/W	0	Must write 0

Table 8-27. Register Settings for Output Bit Mapper vs Operating Mode

BYPASS/ DECIMATION	OUTPUT RESOLUTION	MAPPER EN (D7)	BIT MAPPER RES (D5-D3)
Decimation Bypass	Resolution Change	1	000: 18-bit 001: 16-bit 010: 14-bit
Real Decimation	Resolution Change (default 18-bit)	0	
Complex Decimation		0	

Figure 8-55. Register 0x1E

7	6	5	4	3	2	1	0
0	0	CMOS DCLK DEL		0	0	0	0
R/W-0	R/W-0	R/W-0	R/W-0	R/W-0	R/W-0	R/W-0	R/W-0

Table 8-28. Register 0x1E Field Descriptions

Bit	Field	Type	Reset	Description
7-6	0	R/W	0	Must write 0
5-4	CMOS DCLK DEL	R/W	00	These bits adjust the output timing of CMOS DCLK output. 00: no delay 01: DCLK advanced by 50 ps 10: DCLK delayed by 50 ps 11: DCLK delayed by 100 ps
3-0	0	R/W	0	Must write 0

Copyright © 2020 Texas Instruments Incorporated

Figure 8-56. Register 0x1F

7	6	5	4	3	2	1	0
LOW DR EN	DCLKIN EN	0	DCLK OB EN	2X DCLK	0	0	0
R/W-0	R/W-0	R/W-0	R/W-0	R/W-0	R/W-0	R/W-0	R/W-0

Table 8-29. Register 0x1F Field Descriptions

Bit	Field	Type	Reset	Description
7	LOW DR EN	R/W	0	This bit impacts the output drive strength of the CMOS output buffers. It can be enabled at slow speeds in order to save power consumption but it will also degrade the rise and fall times. 0: Low drive strength disabled.1: Low drive strength enabled.
6	DCLKIN EN	R/W	0	This bit enables the DCLKIN clock input buffer for serial CMOS modes. Also DCLKIN EN (0x18, D4) needs to be set as well. 0: DCLKIN buffer powered down. 1: DCLKIN buffer enabled.
5	0	R/W	0	Must write 0
4	DCLK OB EN	R/W	1	This bit enables DCLK output buffer. 0: DCLK output buffer powered down. 1: DCLK output buffer enabled.
3	2X DCLK	R/W	0	This bit enables SDR output clocking with serial CMOS mode. When this mode is enabled, DCLKIN required is twice as fast and data is output only on rising edge of DCLK. 0: Serial data output on DCLK rising and falling edge. 1: Serial data output on DCLK rising edge only.
2-0	0	R/W	0	Must write 0

Figure 8-57. Register 0x20/21/22

7	6	5	4	3	2	1	0
FCLK PAT [7:0]							
FCLK PAT [15:8]							
0	0	0	0	FCLK PAT [19:16]			
R/W-0	R/W-0	R/W-0	R/W-0	R/W-0	R/W-0	R/W-0	R/W-0

Table 8-30. Register 0x20/21/22 Field Descriptions

Bit	Field	Type	Reset	Description
7-0	FCLK PAT [19:0]	R/W	0xFFC00	These bits can adjust the duty cycle of the FCLK. In decimation bypass mode the FCLK pattern gets adjusted automatically for the different output resolutions. Table 8-31 shows the proper FCLK pattern values for 1-wire and 1/2-wire in real/complex decimation.

Table 8-31. FCLK Pattern for different resolution based on interface

DECIMATION	OUTPUT RESOLUTION	2-WIRE	1-WIRE	1/2-WIRE
REAL DECIMATION	14-bit	Use Default	0xFE000	Use Default
	16-bit		0xFF000	
	18-bit		0xFF800	
	20-bit		0xFFC00	
COMPLEX DECIMATION	14-bit		0xFFFFF	0xFFFFF
	16-bit			
	18-bit			
	20-bit			

Copyright © 2020 Texas Instruments Incorporated

Figure 8-58. Register 0x24

7	6	5	4	3	2	1	0
0	0	CH AVG EN	DDC MUX		DIG BYP	DDC EN	0
R/W-0	R/W-0	R/W-0	R/W-0	R/W-0	R/W-0	R/W-0	R/W-0

Table 8-32. Register 0x24 Field Descriptions

Bit	Field	Type	Reset	Description
7-6	0	R/W	0	Must write 0
5	CH AVG EN	R/W	0	Averages the output of ADC channel A and channel B together. The DDC MUX has to be enabled and set to '11'. The decimation filter needs to be enabled and set to bypass (fullrate output) or decimation and DIG BYP set to 1. 0: Channel averaging feature disabled 1: Output of channel A and channel B are averaged: (A+B)/2.
4-3	DDC MUX	R/W	0	Configures DDC MUX in front of the decimation filter. 00: ADC channel A connected to DDC A; ADC Channel B connected to DDC B 01: ADC channel A connected to DDC A and DDC B. 10: ADC channel B connected to DDC A and DDC B. 11: Output of ADC averaging block (see CH AVG EN) given to DDC A and DDC B.
2	DIG BYP	R/W	0	This bit needs to be set to enable digital features block which includes decimation. 0: Digital feature block bypassed - lowest latency 1: Data path includes digital features
1	DDC EN	R/W	0	Enables internal decimation filter for both channels 0: DDC disabled. 1: DDC enabled.
0	0	R/W	0	Must write 0

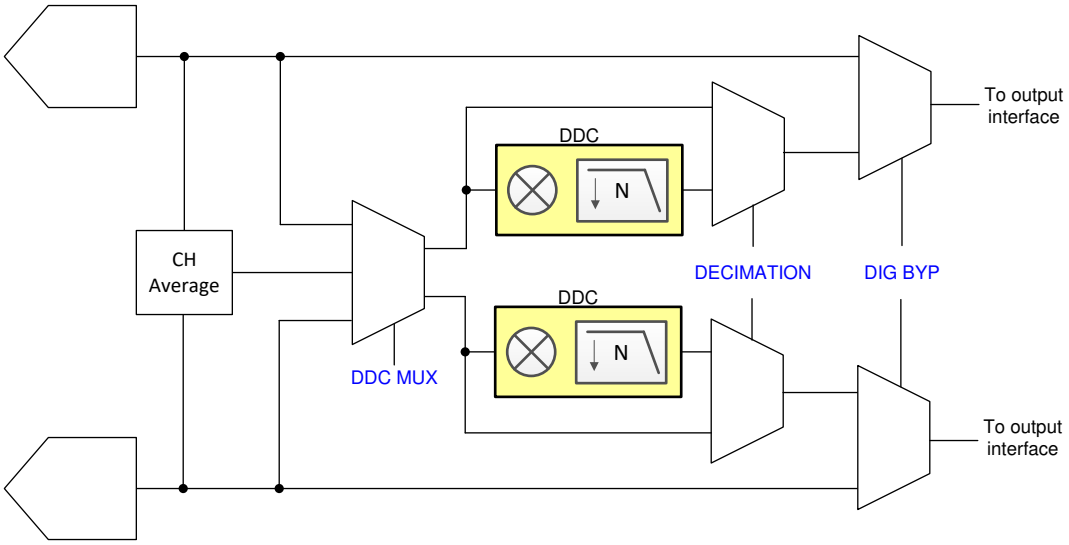

Figure 8-59. Register control for digital features

Copyright © 2020 Texas Instruments Incorporated

Figure 8-60. Register 0x25

7	6	5	4	3	2	1	0
DDC MUX EN	DECIMATION			REAL OUT	0	0	MIX PHASE
R/W-0	R/W-0	R/W-0	R/W-0	R/W-0	R/W-0	R/W-0	R/W-0

Table 8-33. Register 0x25 Field Descriptions

Bit	Field	Type	Reset	Description
7	DDC MUX EN	R/W	0	Enables the digital mux between ADCs and decimation filters. This bit is required for DDC mux settings in register 0x024 (D4, D3) to go into effect. 0: DDC mux disabled 1: DDC mux enabled
6-4	DECIMATION	R/W	000	Complex decimation setting. This applies to both channels. 000: Bypass mode (no decimation) 001: Decimation by 2 010: Decimation by 4 011: Decimation by 8 100: Decimation by 16 101: Decimation by 32 others: not used
3	REAL OUT	R/W	0	This bit selects real output decimation. This mode applies to both channels. In this mode, the decimation filter is a low pass filter and no complex mixing is performed to reduce power consumption. For maximum power savings the NCO in this case should be set to 0. 0: Complex decimation 1: Real decimation
2-1	0	R/W	0	Must write 0
0	MIX PHASE	R/W	0	This bit used to invert the NCO phase 0: NCO phase as is. 1: NCO phase inverted.

Copyright © 2020 Texas Instruments Incorporated

Figure 8-61. Register 0x26

7	6	5	4	3	2	1	0
MIX GAIN A		MIX RES A	FS/4 MIX A	MIX GAIN B		MIX RES B	FS/4 MIX B
R/W-0	R/W-0	R/W-0	R/W-0	R/W-0	R/W-0	R/W-0	R/W-0

Table 8-34. Register 0x26 Field Descriptions

Bit	Field	Type	Reset	Description
7-6	MIX GAIN A	R/W	00	This bit applies a 0, 3 or 6-dB digital gain to the output of digital mixer to compensate for the mixing loss for channel A. 00: no digital gain added 01: 3-dB digital gain added 10: 6-dB digital gain added 11: not used
5	MIX RES A	R/W	0	Toggling this bit resets the NCO phase of channel A and loads the new NCO frequency. This bit does not self reset.
4	FS/4 MIX A	R/W	0	Enables FS/4 mixing for DDC A (complex decimation only). 0: FS/4 mixing disabled. 1: FS/4 mixing enabled.
3-2	MIX GAIN B	R/W	00	This bit applies a 0, 3 or 6-dB digital gain to the output of digital mixer to compensate for the mixing loss for channel B. 00: no digital gain added 01: 3-dB digital gain added 10: 6-dB digital gain added 11: not used
1	MIX RES B	R/W	0	Toggling this bit resets the NCO phase of channel B and loads the new NCO frequency. This bit does not self reset.
0	FS/4 MIX B	R/W	0	Enables FS/4 mixing for DDC B (complex decimation only). 0: FS/4 mixing disabled. 1: FS/4 mixing enabled.

Figure 8-62. Register 0x27

7	6	5	4	3	2	1	0
0	0	0	OP ORDER A	Q-DEL A	FS/4 MIX PH A	0	0
R/W-0	R/W-0	R/W-0	R/W-0	R/W-0	R/W-0	R/W-0	R/W-0

Table 8-35. Register 0x27 Field Descriptions

Bit	Field	Type	Reset	Description
7-5	0	R/W	0	Must write 0
4	OP ORDER A	R/W	0	Swaps the I and Q output order for channel A. See Table 8-36 for recommended settings. Only used with complex decimation. Set to 0 with real decimation. 0: Output order is I[n], Q[n] 1: Output order is swapped: Q[n], I[n]
3	Q-DEL A	R/W	0	This delays the Q-sample output of channel A by one. See Table 8-36 for recommended settings. Only used with complex decimation. Set to 0 with real decimation. 0: Output order is I[n], Q[n] 1: Q-sample is delayed by 1 sample: I[n], Q[n+1], I[n+1], Q[n+2]
2	FS/4 MIX PH A	R/W	0	Inverts the mixer phase for channel A when using FS/4 mixer 0: Mixer phase is non-inverted 1: Mixer phase is inverted
1-0	0	R/W	0	Must write 0

Copyright © 2020 Texas Instruments Incorporated

Table 8-36. OP-ORDER and Q-DELAY Register Settings for Complex Decimation

SCMOS INTERFACE	OP-ORDER	Q-DELAY
2-wire	1	0
1-wire	0	1
1/2-wire	1	1

Figure 8-63. Register 0x2A/B/C/D

7	6	5	4	3	2	1	0
NCO A [7:0]							
NCO A [15:8]							
NCO A [23:16]							
NCO A [31:24]							
R/W-0	R/W-0	R/W-0	R/W-0	R/W-0	R/W-0	R/W-0	R/W-0

Table 8-37. Register 0x2A/2B/2C/2D Field Descriptions

Bit	Field	Type	Reset	Description
7-0	NCO A [31:0]	R/W	0	Sets the 32 bit NCO value for decimation filter channel A. The NCO value is $f_{NCO} \times 2^{32}/FS$ In real decimation mode these registers are automatically set to 0.

Figure 8-64. Register 0x2E/2F/30

7	6	5	4	3	2	1	0
0	0	0	OP ORDER B	Q-DEL B	FS/4 MIX PH B	0	0
R/W-0	R/W-0	R/W-0	R/W-0	R/W-0	R/W-0	R/W-0	R/W-0

Table 8-38. Register 0x2E/2F/30 Field Descriptions

Bit	Field	Type	Reset	Description
7-5	0	R/W	0	Must write 0
4	OP ORDER B	R/W	0	Swaps the I and Q output order for channel B. See Table 8-36 for recommended settings. Only used with complex decimation. Set to 0 with real decimation. 0: Output order is I[n], Q[n] 1: Output order is swapped: Q[n], I[n]
3	Q-DEL B	R/W	0	This delays the Q-sample output of channel B by one. See Table 8-36 for recommended settings. Only used with complex decimation. Set to 0 with real decimation. 0: Output order is I[n], Q[n] 1: Q-sample is delayed by 1 sample: I[n], Q[n+1], I[n+1], Q[n+2]
2	FS/4 MIX PH B	R/W	0	Inverts the mixer phase for channel B when using FS/4 mixer 0: Mixer phase is non-inverted 1: Mixer phase is inverted
1-0	0	R/W	0	Must write 0

Copyright © 2020 Texas Instruments Incorporated

Figure 8-65. Register 0x31/32/33/34

7	6	5	4	3	2	1	0
NCO B [7:0]							
NCO B [15:8]							
NCO B [23:16]							
NCO B [31:24]							
R/W-0	R/W-0	R/W-0	R/W-0	R/W-0	R/W-0	R/W-0	R/W-0

Table 8-39. Register 0x31/32/33/34 Field Descriptions

Bit	Field	Type	Reset	Description
7-0	NCO B [31:0]	R/W	0	Sets the 32 bit NCO value for decimation filter channel B. The NCO value is $f_{NCO} \times 2^{32}/FS$ In real decimation mode these registers are automatically set to 0.

Figure 8-66. Register 0x8F

7	6	5	4	3	2	1	0
0	0	0	0	0	0	FORMAT A	0
R/W-0	R/W-0	R/W-0	R/W-0	R/W-0	R/W-0	R/W-0	R/W-0

Table 8-40. Register 0x8F Field Descriptions

Bit	Field	Type	Reset	Description
7-2	0	R/W	0	Must write 0
1	FORMAT A	R/W	0	This bit sets the output data format for channel A. 0: 2s complement 1: Offset binary
0	0	R/W	0	Must write 0

Figure 8-67. Register 0x92

7	6	5	4	3	2	1	0
0	0	0	0	0	0	FORMAT B	0
R/W-0	R/W-0	R/W-0	R/W-0	R/W-0	R/W-0	R/W-0	R/W-0

Table 8-41. Register 0x92 Field Descriptions

Bit	Field	Type	Reset	Description
7-2	0	R/W	0	Must write 0
1	FORMAT B	R/W	0	This bit sets the output data format for channel B. 0: 2s complement 1: Offset binary
0	0	R/W	0	Must write 0

Copyright © 2020 Texas Instruments Incorporated

9 Application and Implementation

Note

Information in the following applications sections is not part of the TI component specification, and TI does not warrant its accuracy or completeness. TI's customers are responsible for determining suitability of components for their purposes. Customers should validate and test their design implementation to confirm system functionality.

9.1 Typical Application

A spectrum analyzer is a typical frequency domain application for the ADC364x and its front end circuitry is very similar to several other systems such as software defined radio (SDR), radar or communications. Some applications require frequency coverage including DC or near DC (e.g. sonar) so it's included in this example.

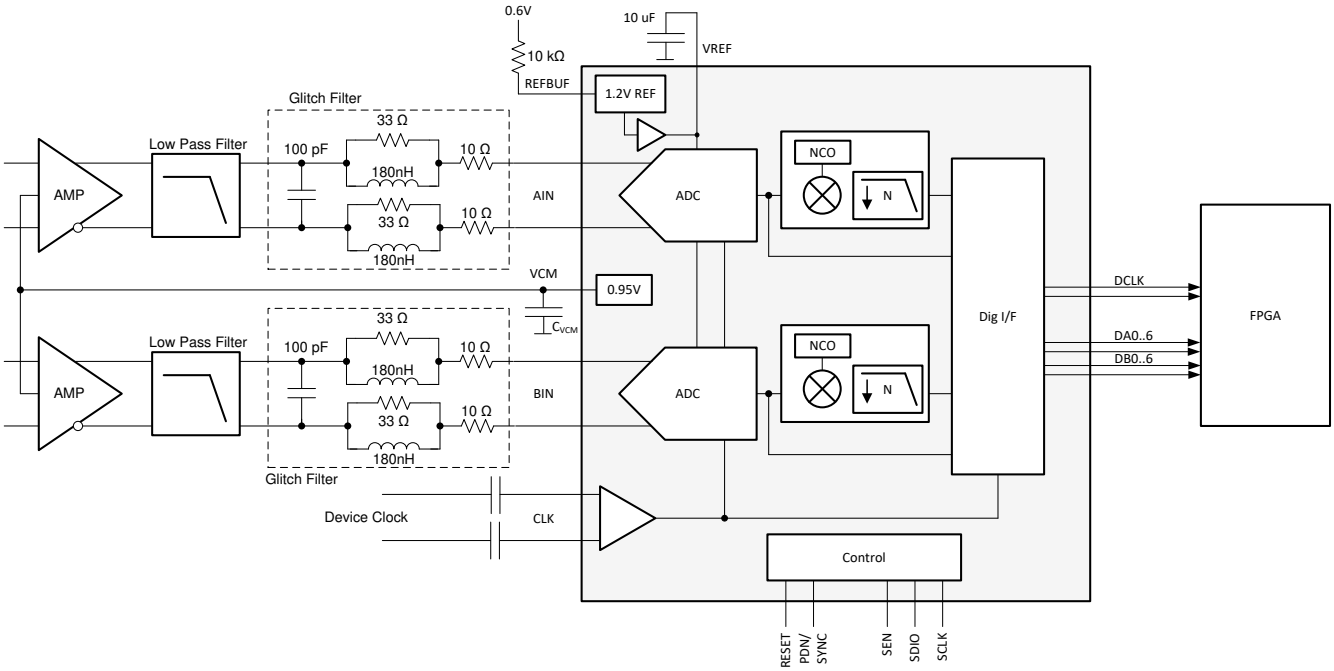

Figure 9-1. Typical configuration for a spectrum analyzer with DC support

9.1.1 Design Requirements

Frequency domain applications cover a wide range of frequencies from low input frequencies at or near DC in the 1st Nyquist zone to undersampling in higher Nyquist zones. If very low input frequency is supported then the input has to be DC coupled and the ADC driven by a fully differential amplifier (FDA). If low frequency support is not needed then AC coupling and use of a balun may be more suitable.

The internal reference is used since DC precision is not needed. However the ADC AC performance is highly dependent on the quality of the external clock source. If in-band interferers can be present then the ADC SFDR performance will be a key care about as well. A higher ADC sampling rate is desirable in order to relax the external anti-aliasing filter – an internal decimation filter can be used to reduce the digital output rate afterwards.

Table 9-1. Design key care-abouts

FEATURE	DESCRIPTION
Signal Bandwidth	DC to 20 MHz
Input Driver	Single ended to differential signal conversion and DC coupling
Clock Source	External clock with low jitter

Copyright © 2020 Texas Instruments Incorporated

When designing the amplifier/filter driving circuit, the ADC input full-scale voltage needs to be taken into consideration. For example, the ADC364x input full-scale is 2.25 Vpp. When factoring in ~ 1 dB for insertion loss of the filter, then the amplifier needs to deliver close to 2.5 Vpp. The amplifier distortion performance will degrade with a larger output swing and considering the ADC common mode input voltage the amplifier may not be able to deliver the full swing. The ADC364x provides an output common mode voltage of 0.95V and the THS4541 for example can only swing within 250 mV of its negative supply. A unipolar 3.3 V amplifier power supply will thus limit the maximum voltage swing to ~ 2.8Vpp. Additionally input voltage protection diodes may be needed to protect the ADC from over-voltage events.

Table 9-2. Output voltage swing of THS4541 vs power supply

DEVICE	MIN OUTPUT VOLTAGE	MAX SWING WITH 3.3 V/ 0 V SUPPLY
THS4541	VS- + 250 mV	2.8 Vpp

9.1.2 Detailed Design Procedure

9.1.2.1 Input Signal Path

Depending on desired input signal frequency range the THS4551 and THS4541 provide very good low power options to drive the ADC inputs. Table 9-3 provides a comparison between the THS4551 and THS4541 and the power consumption vs usable frequency trade off.

Table 9-3. Fully Differential Amplifier Options

DEVICE	CURRENT (IQ) PER CHANNEL	USABLE FREQUENCY RANGE
THS4561	0.8 mA	< 3 MHz
THS4551	1.4 mA	< 10 MHz
THS4541	10 mA	< 70 MHz

The low pass filter design (topology, filter order) is driven by the application itself. However, when designing the low pass filter, the optimum load impedance for the amplifier should be taken into consideration as well. Between the low pass filter and the ADC input the sampling glitch filter needs to added as well as shown in Section 8.3.1.2.1. In this example the DC - 30 MHz glitch filter is selected.

9.1.2.2 Sampling Clock

Applications operating with low input frequencies (such as DC to 20 MHz) typically are less sensitive to performance degradation due to clock jitter. The internal ADC aperture jitter improves with faster rise and fall times (i.e. square wave vs sine wave). Table 9-4 provides an overview of the estimated SNR performance of the ADC364x based on different amounts of jitter of the external clock source. The SNR is estimated based on ADC364x thermal noise of 79 dBFS and input signal at -1dBFS.

Table 9-4. ADC SNR performance across vs input frequency for different amounts of external clock jitter

INPUT FREQUENCY	$T_{J,EXT}$ = 100 fs	$T_{J,EXT}$ = 250 fs	$T_{J,EXT}$ = 500 fs	$T_{J,EXT}$ = 1 ps
5 MHz	79.0	79.0	78.9	78.7
10 MHz	79.0	78.9	78.7	78.0
20 MHz	78.8	78.6	77.9	75.9

Termination of the clock input should be considered for long clock traces.

9.1.2.3 Voltage Reference

The ADC364x is configured to internal reference operation by applying 0.6 V to the REFBUF pin.

Copyright © 2020 Texas Instruments Incorporated

9.1.3 Application Curves

The following FFT plots show the performance of THS4541 driving the ADC364x operated at 65 MSPS with a full-scale input at -1 dBFS with input frequencies at 1, 5, 10 and 20 MHz.

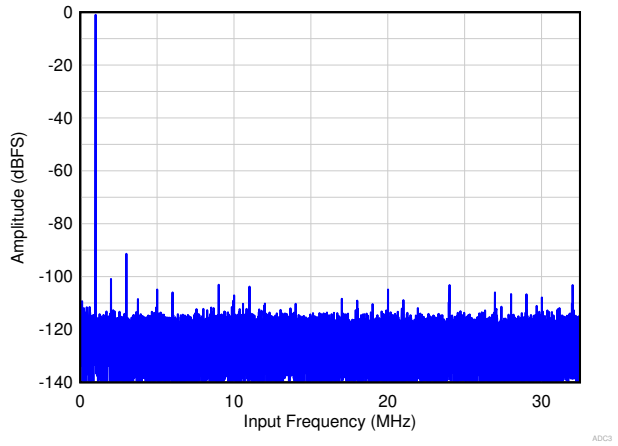

SNR = 78.7 dBFS, SFDR = 90 dBc

Figure 9-2. Single Tone FFT at F_{IN} = 1 MHz

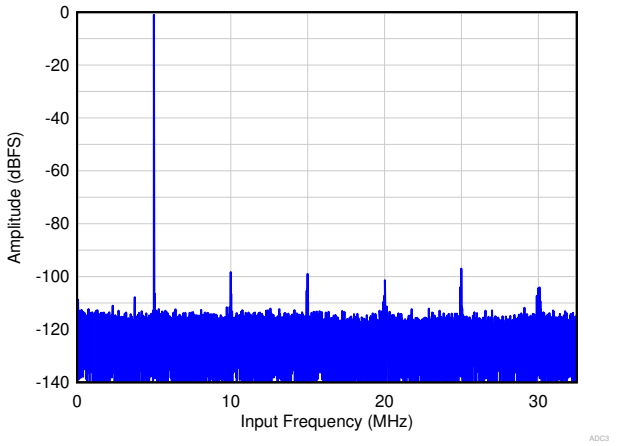

SNR = 78.6 dBFS, SFDR = 96 dBc

Figure 9-3. Single Tone FFT at F_{IN} = 5 MHz

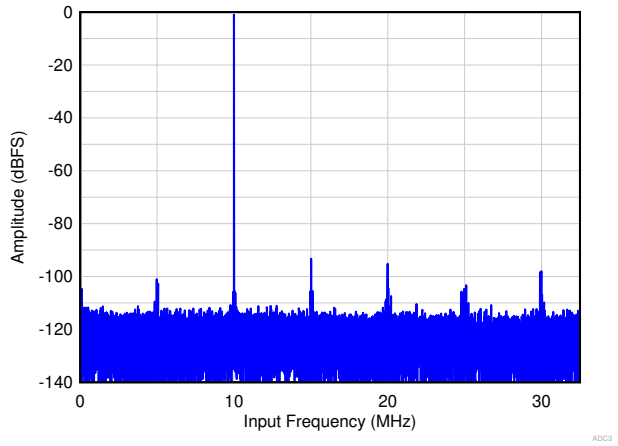

SNR = 78.0 dBFS, SFDR = 92 dBc

Figure 9-4. Single Tone FFT at F_{IN} = 10 MHz

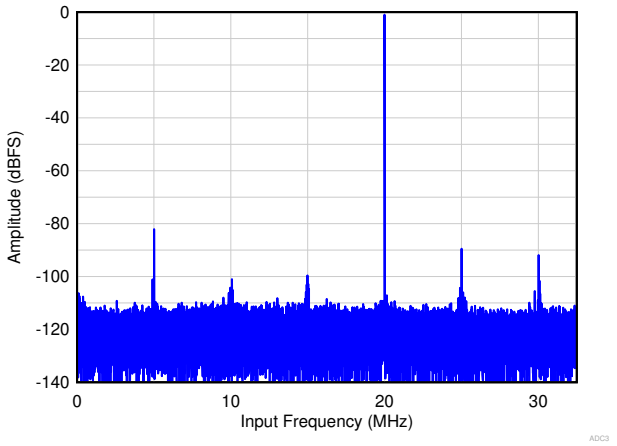

SNR = 75.9 dBFS, SFDR = 81 dBc

Figure 9-5. Single Tone FFT at F_{IN} = 20 MHz

Copyright © 2020 Texas Instruments Incorporated

10 Initialization Set Up

After power-up, the internal registers must be initialized to their default values through a hardware reset by applying a high pulse on the RESET pin, as shown in Figure 10-1.

1. Apply AVDD and IOVDD (no specific sequence required). After AVDD is applied the internal bandgap reference will power up and settle out in ~ 2ms.
2. Configure REFBUF pin (pull high or low even if configured via SPI later on) and apply the sampling clock.
3. Apply hardware reset. After hardware reset is released, the default registers are loaded from internal fuses and the internal power up capacitor calibration is initiated. The calibration takes approximately 200000 clock cycles.
4. Begin programming using SPI interface.

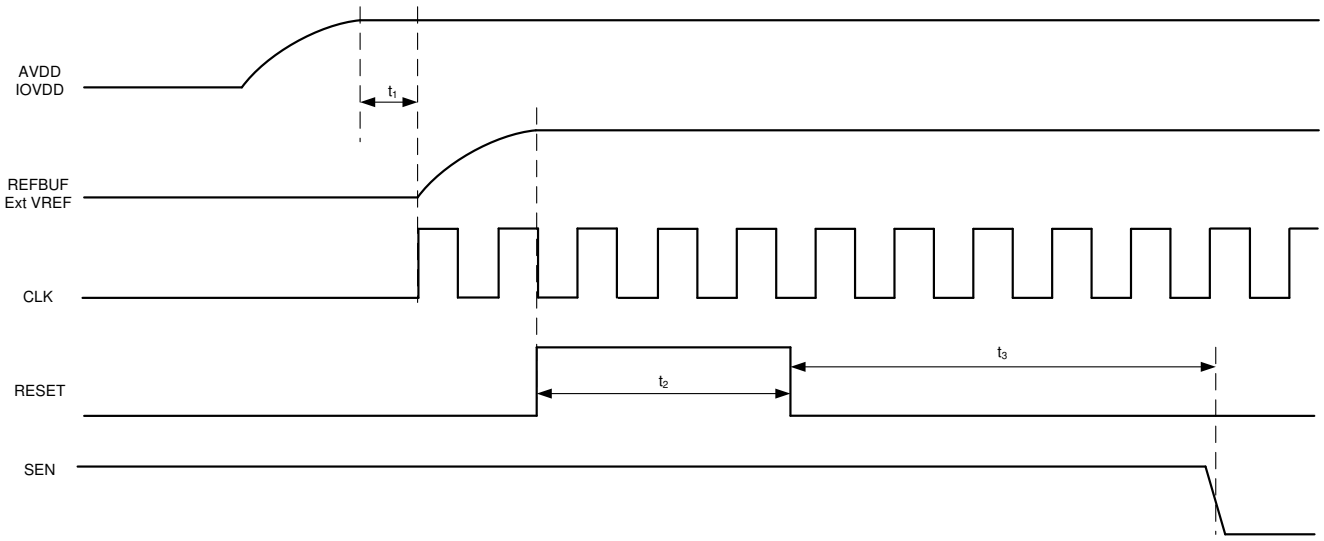

Figure 10-1. Initialization of serial registers after power up

Table 10-1. Power-up timing

		MIN	TYP	MAX	UNIT
t_1	Power-on delay: delay from power up to logic level of REFBUF pin	2			ms
t_2	Delay from REFBUF pin logic level to RESET rising edge	100			ns
t_4	RESET pulse width	1			us
t_5	Delay from RESET disable to SEN active	~ 200000			clock cycles

10.1 Register Initialization During Operation

If required, the serial interface registers can be cleared and reset to default settings during operation either:

- through a hardware reset or
- by applying a software reset. When using the serial interface, set the RESET bit (D0 in register address 0x00) high. This setting initializes the internal registers to the default values and then self-resets the RESET bit low. In this case, the RESET pin is kept low.

After hardware or software reset the wait time is also ~ 200000 clock cycles before the SPI registers can be programmed.

Copyright © 2020 Texas Instruments Incorporated

11 Power Supply Recommendations

The ADC364x requires two different power-supplies. The AVDD rail provides power for the internal analog circuits and the ADC itself while the IOVDD rail powers the digital interface and the internal digital circuits like decimation filter or output interface mapper. Power sequencing is not required.

The AVDD power supply must be low noise in order to achieve data sheet performance. In applications operating near DC, the 1/f noise contribution of the power supply needs to be considered as well. The ADC is designed for very good PSRR which aides with the power supply filter design.

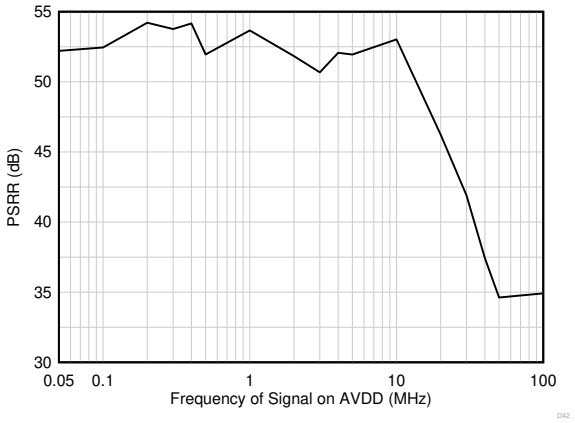

Figure 11-1. Power supply rejection ratio (PSRR) vs frequency

There are two recommended power-supply architectures:

1. Step down using high-efficiency switching converters, followed by a second stage of regulation using a low noise LDO to provide switching noise reduction and improved voltage accuracy.
2. Directly step down the final ADC supply voltage using high-efficiency switching converters. This approach provides the best efficiency, but care must be taken to ensure switching noise is minimized to prevent degraded ADC performance.

TI WEBENCH Power Designer can be used to select and design the individual power-supply elements needed: see the WEBENCH Power Designer

Recommended switching regulators for the first stage include the TPS62821, and similar devices.

Recommended low dropout (LDO) linear regulators include the TPS7A4701, TPS7A90, LP5901, and similar devices.

For the switch regulator only approach, the ripple filter must be designed with a notch frequency that aligns with the switching ripple frequency of the DC/DC converter. Note the switching frequency reported from WEBENCH and design the EMI filter and capacitor combination to have the notch frequency centered as needed. Figure 11-2 and Figure 11-3 illustrate the two approaches.

AVDD and IOVDD supply voltages should not be shared in order to prevent digital switching noise from coupling into the analog signal chain.

Copyright © 2020 Texas Instruments Incorporated

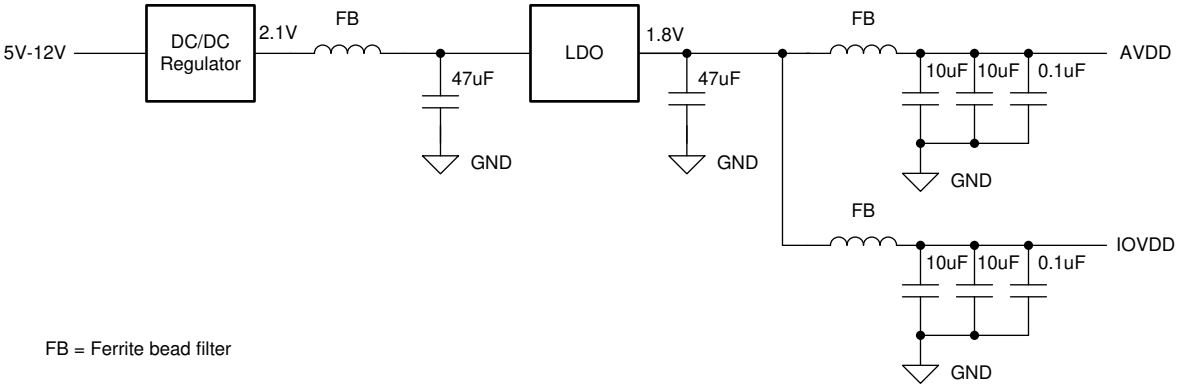

Figure 11-2. Example: LDO Linear Regulator Approach

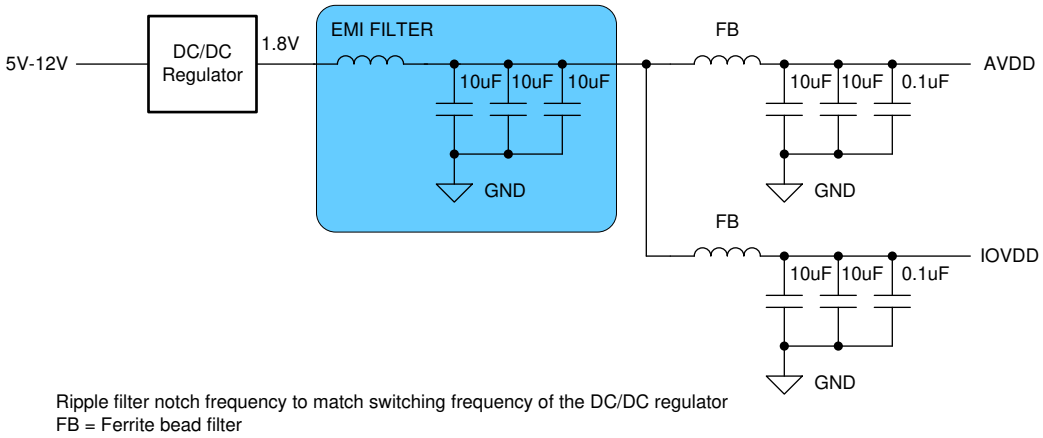

Figure 11-3. Example Switcher-Only Approach

Copyright © 2020 Texas Instruments Incorporated

12 Layout

12.1 Layout Guidelines

There are several critical signals which require specific care during board design:

1. Analog input and clock signals
   - Traces should be as short as possible and vias should be avoided where possible to minimize impedance discontinuities.
   - Traces should be routed using loosely coupled 100-Ω differential traces.
   - Differential trace lengths should be matched as close as possible to minimize phase imbalance and HD2 degradation.
2. Digital output interface
   - A 20 Ω series isolation resistor should be used on each CMOS output and placed close the digital output. This isolation resistor limits the output current into the capacitive load and thus minimizes the switching noise inside the ADC. When driving longer distances a buffer should be used. The resistor value should be optimized for the desired output data rate.
3. Voltage reference
   - The bypass capacitor should be placed as close to the device pins as possible and connected between VREF and REFGND – on top layer avoiding vias.
   - Depending on configuration an additional bypass capacitor between REFBUF and REFGND may be recommended and should also be placed as close to pins as possible on top layer.
4. Power and ground connections
   - Provide low resistance connection paths to all power and ground pins.
   - Use power and ground planes instead of traces.
   - Avoid narrow, isolated paths which increase the connection resistance.
   - Use a signal/ground/power circuit board stackup to maximize coupling between the ground and power plane.

12.2 Layout Example

The following screen shot shows the top layer of the ADC364x EVM.

- Signal and clock inputs are routed as differential signals on the top layer avoiding vias.
- Serial CMOS output interface lanes with isolation resistor and digital buffer.
- Bypass caps are close to the VREF pin on the top layer avoiding vias.

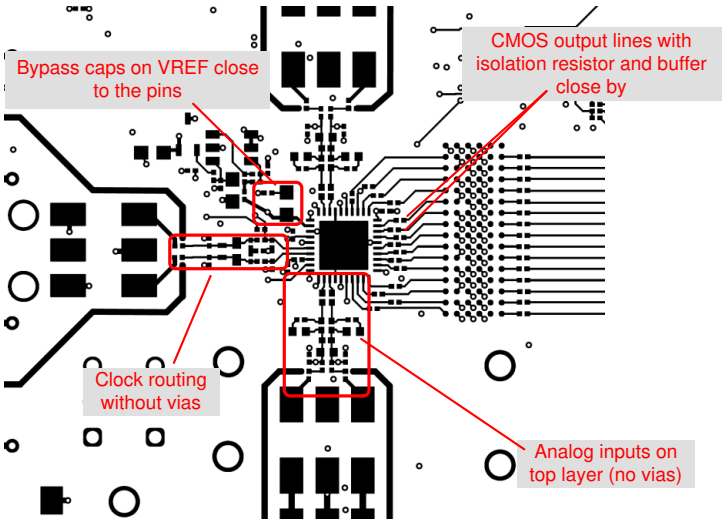

Figure 12-1. Layout example: top layer of ADC364x EVM

Copyright © 2020 Texas Instruments Incorporated

13 Device and Documentation Support

13.1 Receiving Notification of Documentation Updates

To receive notification of documentation updates, navigate to the device product folder on ti.com. Click on *Subscribe to updates* to register and receive a weekly digest of any product information that has changed. For change details, review the revision history included in any revised document.

13.2 Support Resources

TI E2E™ support forums are an engineer's go-to source for fast, verified answers and design help — straight from the experts. Search existing answers or ask your own question to get the quick design help you need.

Linked content is provided "AS IS" by the respective contributors. They do not constitute TI specifications and do not necessarily reflect TI's views; see TI's Terms of Use.

13.3 Trademarks

TI E2E™ is a trademark of Texas Instruments.
All trademarks are the property of their respective owners.

13.4 Electrostatic Discharge Caution



This integrated circuit can be damaged by ESD. Texas Instruments recommends that all integrated circuits be handled with appropriate precautions. Failure to observe proper handling and installation procedures can cause damage.

ESD damage can range from subtle performance degradation to complete device failure. Precision integrated circuits may be more susceptible to damage because very small parametric changes could cause the device not to meet its published specifications.

13.5 Glossary

TI Glossary This glossary lists and explains terms, acronyms, and definitions.

14 Mechanical, Packaging, and Orderable Information

The following pages include mechanical, packaging, and orderable information. This information is the most current data available for the designated devices. This data is subject to change without notice and revision of this document. For browser-based versions of this data sheet, refer to the left-hand navigation.

Copyright © 2020 Texas Instruments Incorporated

PACKAGING INFORMATION

Orderable Device	Status (1)	Package Type	Package Drawing	Pins	Package Qty	Eco Plan (2)	Lead finish/ Ball material (6)	MSL Peak Temp (3)	Op Temp (°C)	Device Marking (4/5)	Samples
ADC3643IRSBR	ACTIVE	WQFN	RSB	40	3000	Green (RoHS & no Sb/Br)	NIPDAU	Level-3-260C-168 HR	-40 to 105	AZ3643	Samples
ADC3643IRSBT	ACTIVE	WQFN	RSB	40	250	Green (RoHS & no Sb/Br)	NIPDAU	Level-3-260C-168 HR	-40 to 105	AZ3643	Samples

(1) The marketing status values are defined as follows:
ACTIVE: Product device recommended for new designs.
LIFEBUY: TI has announced that the device will be discontinued, and a lifetime-buy period is in effect.
NRND: Not recommended for new designs. Device is in production to support existing customers, but TI does not recommend using this part in a new design.
PREVIEW: Device has been announced but is not in production. Samples may or may not be available.
OBSOLETE: TI has discontinued the production of the device.

(2) **RoHS:** TI defines "RoHS" to mean semiconductor products that are compliant with the current EU RoHS requirements for all 10 RoHS substances, including the requirement that RoHS substance do not exceed 0.1% by weight in homogeneous materials. Where designed to be soldered at high temperatures, "RoHS" products are suitable for use in specified lead-free processes. TI may reference these types of products as "Pb-Free".
RoHS Exempt: TI defines "RoHS Exempt" to mean products that contain lead but are compliant with EU RoHS pursuant to a specific EU RoHS exemption.
Green: TI defines "Green" to mean the content of Chlorine (Cl) and Bromine (Br) based flame retardants meet JS709B low halogen requirements of <=1000ppm threshold. Antimony trioxide based flame retardants must also meet the <=1000ppm threshold requirement.

(3) MSL, Peak Temp. - The Moisture Sensitivity Level rating according to the JEDEC industry standard classifications, and peak solder temperature.

(4) There may be additional marking, which relates to the logo, the lot trace code information, or the environmental category on the device.

(5) Multiple Device Markings will be inside parentheses. Only one Device Marking contained in parentheses and separated by a "~" will appear on a device. If a line is indented then it is a continuation of the previous line and the two combined represent the entire Device Marking for that device.

(6) Lead finish/Ball material - Orderable Devices may have multiple material finish options. Finish options are separated by a vertical ruled line. Lead finish/Ball material values may wrap to two lines if the finish value exceeds the maximum column width.

Important Information and Disclaimer: The information provided on this page represents TI's knowledge and belief as of the date that it is provided. TI bases its knowledge and belief on information provided by third parties, and makes no representation or warranty as to the accuracy of such information. Efforts are underway to better integrate information from third parties. TI has taken and continues to take reasonable steps to provide representative and accurate information but may not have conducted destructive testing or chemical analysis on incoming materials and chemicals. TI and TI suppliers consider certain information to be proprietary, and thus CAS numbers and other limited information may not be available for release.

In no event shall TI's liability arising out of such information exceed the total purchase price of the TI part(s) at issue in this document sold by TI to Customer on an annual basis.

TAPE AND REEL INFORMATION

REEL DIMENSIONS

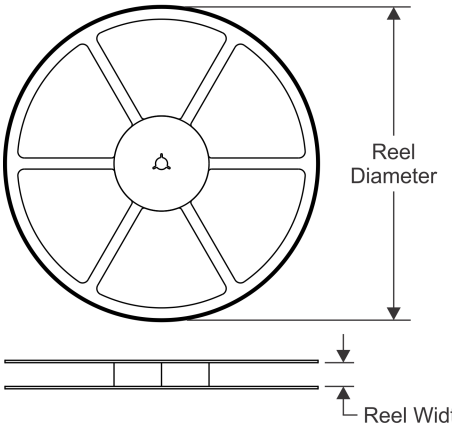

TAPE DIMENSIONS

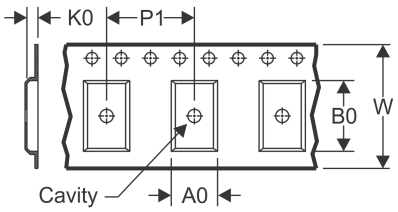

A0	Dimension designed to accommodate the component width
B0	Dimension designed to accommodate the component length
K0	Dimension designed to accommodate the component thickness
W	Overall width of the carrier tape
P1	Pitch between successive cavity centers

QUADRANT ASSIGNMENTS FOR PIN 1 ORIENTATION IN TAPE

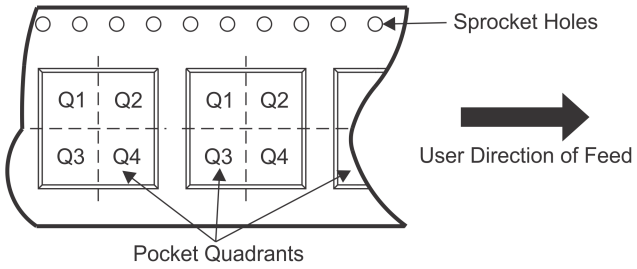

*All dimensions are nominal

Device	Package Type	Package Drawing	Pins	SPQ	Reel Diameter (mm)	Reel Width W1 (mm)	A0 (mm)	B0 (mm)	K0 (mm)	P1 (mm)	W (mm)	Pin1 Quadrant
ADC3643IRSBR	WQFN	RSB	40	3000	330.0	12.4	5.3	5.3	1.5	8.0	12.0	Q2
ADC3643IRSBT	WQFN	RSB	40	250	180.0	12.4	5.3	5.3	1.5	8.0	12.0	Q2

TAPE AND REEL BOX DIMENSIONS

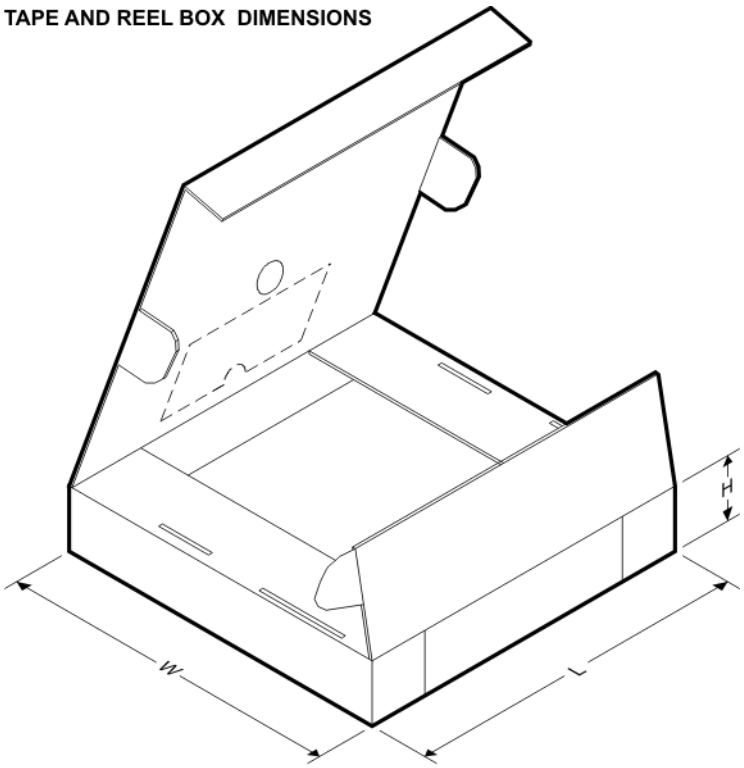

*All dimensions are nominal

Device	Package Type	Package Drawing	Pins	SPQ	Length (mm)	Width (mm)	Height (mm)
ADC3643IRSBR	WQFN	RSB	40	3000	350.0	350.0	43.0
ADC3643IRSBT	WQFN	RSB	40	250	210.0	185.0	35.0

GENERIC PACKAGE VIEW

RSB 40

WQFN - 0.8 mm max height

5 x 5 mm, 0.4 mm pitch

PLASTIC QUAD FLATPACK - NO LEAD

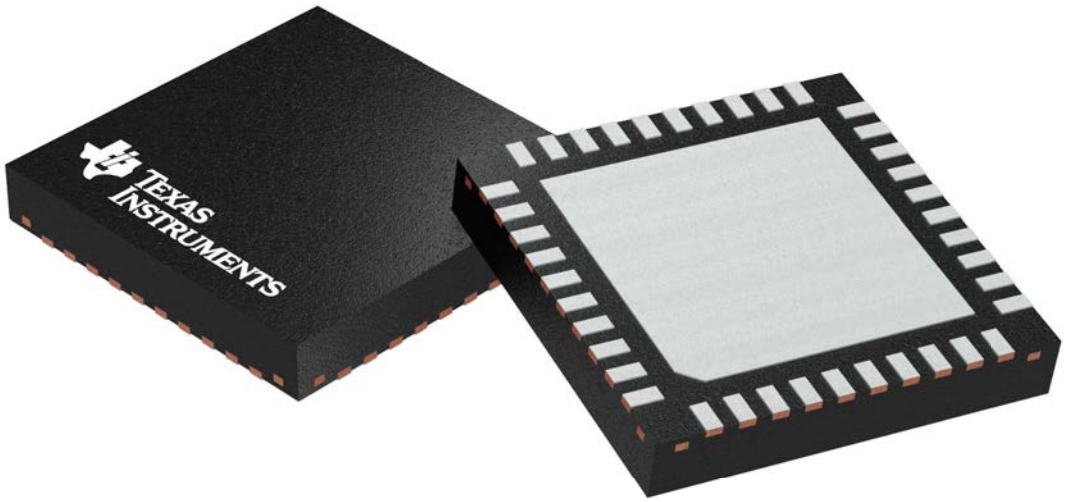

Images above are just a representation of the package family, actual package may vary.
Refer to the product data sheet for package details.

RSB0040E

PACKAGE OUTLINE

WQFN - 0.8 mm max height

PLASTIC QUAD FLATPACK - NO LEAD

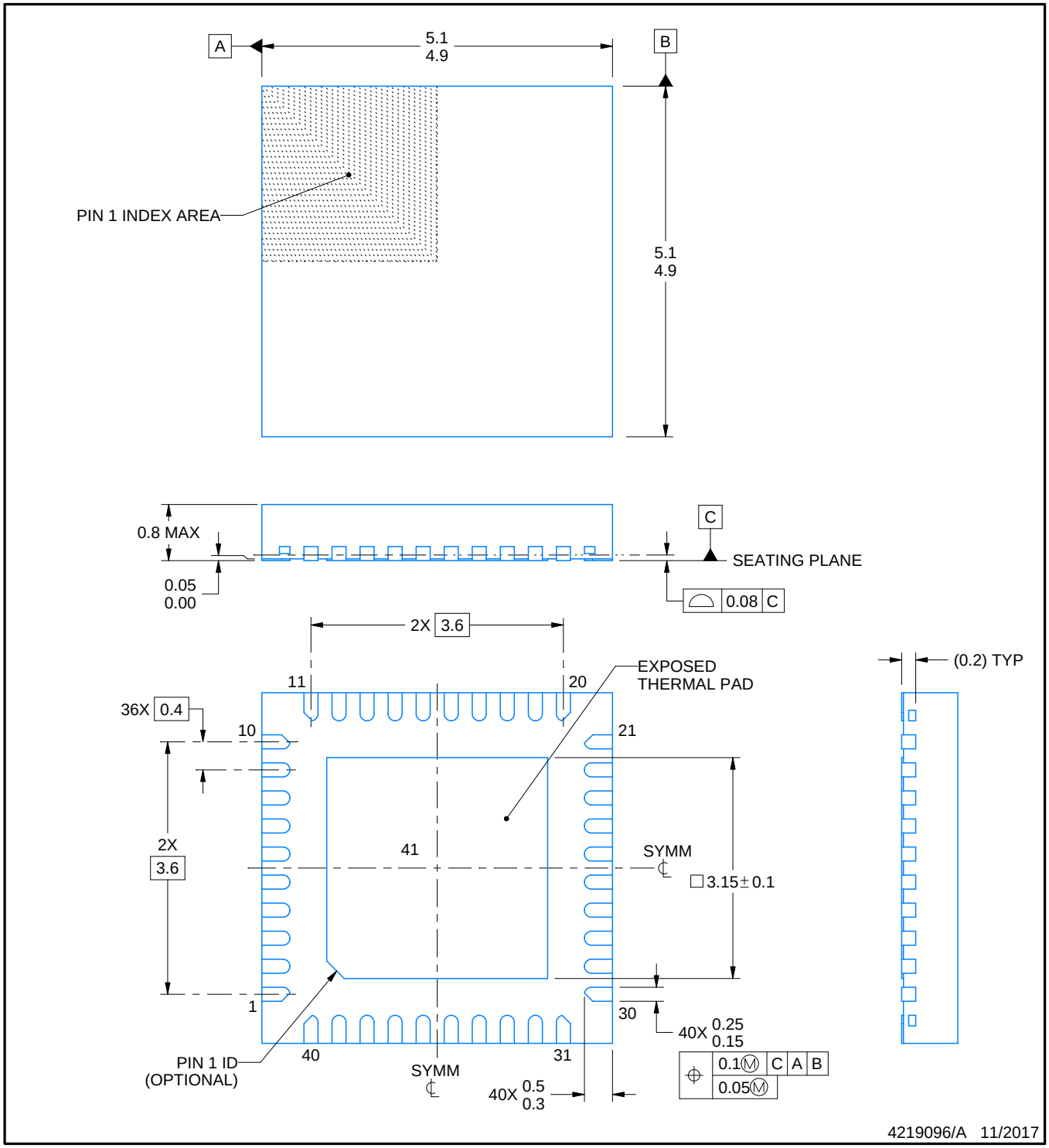

NOTES:

1. All linear dimensions are in millimeters. Any dimensions in parenthesis are for reference only. Dimensioning and tolerancing per ASME Y14.5M.
2. This drawing is subject to change without notice.
3. The package thermal pad must be soldered to the printed circuit board for thermal and mechanical performance.

EXAMPLE BOARD LAYOUT

RSB0040E

WQFN - 0.8 mm max height

PLASTIC QUAD FLATPACK - NO LEAD

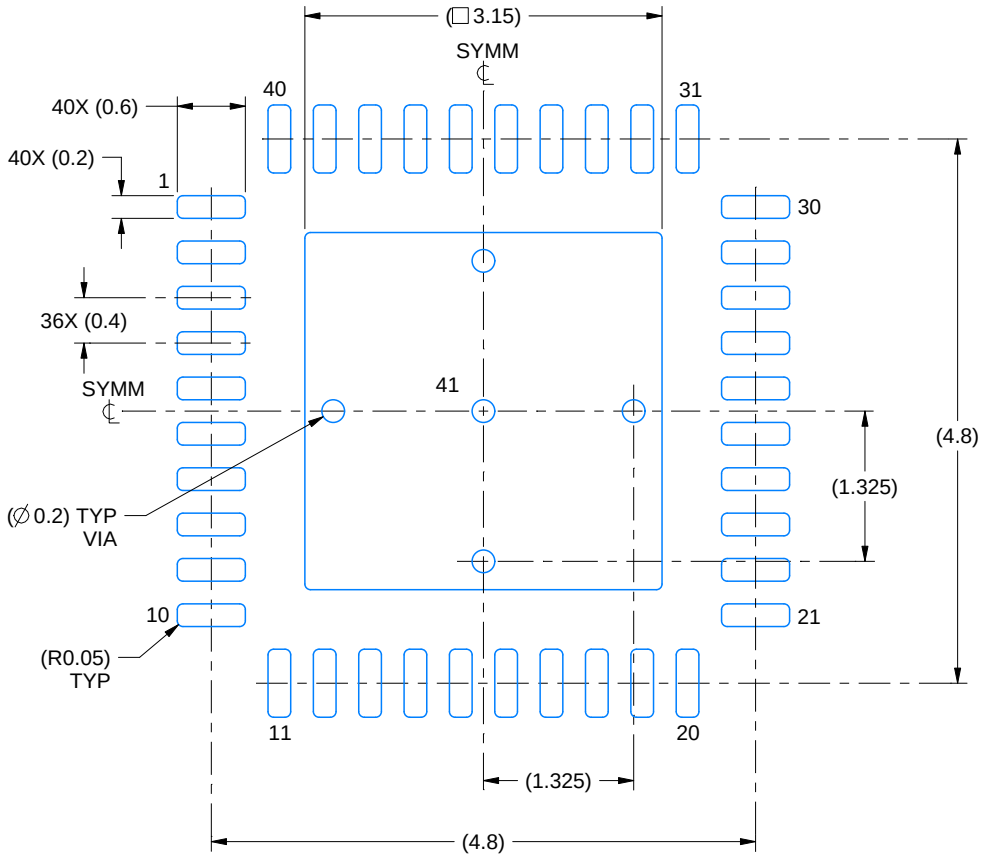

LAND PATTERN EXAMPLE
EXPOSED METAL SHOWN
SCALE:15X

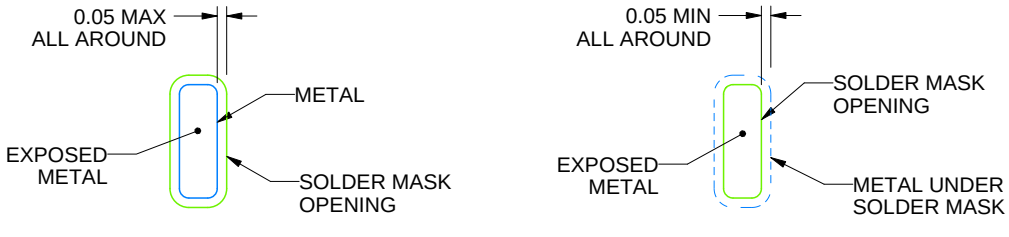

NON SOLDER MASK
DEFINED
(PREFERRED)

SOLDER MASK
DEFINED

SOLDER MASK DETAILS

4219096/A 11/2017

NOTES: (continued)

4. This package is designed to be soldered to a thermal pad on the board. For more information, see Texas Instruments literature number SLUA271 (www.ti.com/lit/slua271).
5. Vias are optional depending on application, refer to device data sheet. If any vias are implemented, refer to their locations shown on this view. It is recommended that vias under paste be filled, plugged or tented.

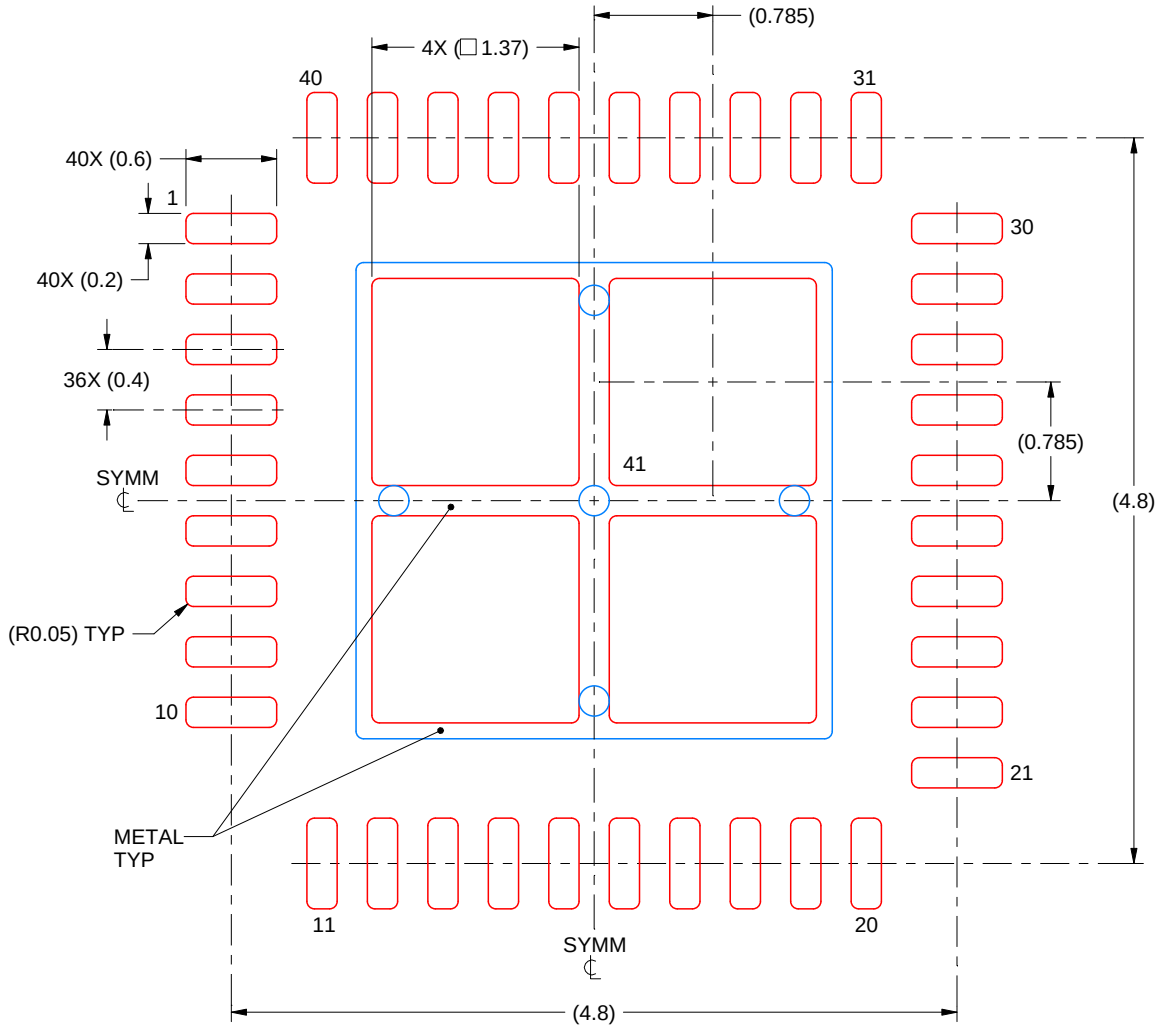

SOLDER PASTE EXAMPLE
BASED ON 0.1 mm THICK STENCIL

EXPOSED PAD 41
75% PRINTED SOLDER COVERAGE BY AREA UNDER PACKAGE
SCALE:20X

4219096/A 11/2017

NOTES: (continued)

6. Laser cutting apertures with trapezoidal walls and rounded corners may offer better paste release. IPC-7525 may have alternate design recommendations.

IMPORTANT NOTICE AND DISCLAIMER

TI PROVIDES TECHNICAL AND RELIABILITY DATA (INCLUDING DATASHEETS), DESIGN RESOURCES (INCLUDING REFERENCE DESIGNS), APPLICATION OR OTHER DESIGN ADVICE, WEB TOOLS, SAFETY INFORMATION, AND OTHER RESOURCES “AS IS” AND WITH ALL FAULTS, AND DISCLAIMS ALL WARRANTIES, EXPRESS AND IMPLIED, INCLUDING WITHOUT LIMITATION ANY IMPLIED WARRANTIES OF MERCHANTABILITY, FITNESS FOR A PARTICULAR PURPOSE OR NON-INFRINGEMENT OF THIRD PARTY INTELLECTUAL PROPERTY RIGHTS.

These resources are intended for skilled developers designing with TI products. You are solely responsible for (1) selecting the appropriate TI products for your application, (2) designing, validating and testing your application, and (3) ensuring your application meets applicable standards, and any other safety, security, or other requirements. These resources are subject to change without notice. TI grants you permission to use these resources only for development of an application that uses the TI products described in the resource. Other reproduction and display of these resources is prohibited. No license is granted to any other TI intellectual property right or to any third party intellectual property right. TI disclaims responsibility for, and you will fully indemnify TI and its representatives against, any claims, damages, costs, losses, and liabilities arising out of your use of these resources.

TI’s products are provided subject to TI’s Terms of Sale (www.ti.com/legal/termsofsale.html) or other applicable terms available either on ti.com or provided in conjunction with such TI products. TI’s provision of these resources does not expand or otherwise alter TI’s applicable warranties or warranty disclaimers for TI products.

Mailing Address: Texas Instruments, Post Office Box 655303, Dallas, Texas 75265
Copyright © 2020, Texas Instruments Incorporated