Self-Calibrating 12-Bit Plus Sign Serial I/O A/D Converters with MUX and Sample/Hold

Check for Samples: ADC12030, ADC12032, ADC12034, ADC12038, ADC12H030, ADC12H032, ADC12H034, ADC12H038

FEATURES

- Serial I/O (MICROWIRE Compatible)
- 2, 4, or 8 Chan Differential or Single-Ended Multiplexer
- Analog Input Sample/Hold Function
- Power Down Mode
- Variable Resolution and Conversion Rate
- Programmable Acquisition Time
- Variable Digital Output Word Length and Format
- No Zero or Full Scale Adjustment Required
- Fully Tested and Ensured with a 4.096V Reference
- 0V to 5V Analog Input Range with Single 5V Power Supply
- No Missing Codes over Temperature

APPLICATIONS

- Medical Instruments
- Process Control Systems
- Test Equipment

KEY SPECIFICATIONS

- Resolution 12-bit plus sign
- 12-bit plus sign conversion time
  - ADC12H30 family 5.5 µs (max)
  - ADC12030 family 8.8 µs (max)
- 12-bit plus sign throughput time
  - ADC12H30 family 8.6 µs (max)
  - ADC12030 family 14 µs (max)
- Integral Linearity Error ±1 LSB (max)
- Single Supply 5V ±10%
- Power consumption 33 mW (max)
  - Power down 100 µW (typ)

DESCRIPTION

NOTE: Some of these devices may be obsolete and are described and shown here for reference only. See our web site for product availability.

The ADC12030, and ADC12H030 families are 12-bit plus sign successive approximation Analog-to-Digital Converters with serial I/O and configurable input multiplexers. The ADC12034/ADC12H034 and ADC12038/ADC12H038 have 4 and 8 channel multiplexers, respectively. The differential multiplexer outputs and ADC inputs are available on the MUXOUT1, MUXOUT2, A/DIN1 and A/DIN2 pins. The ADC12030/ADC12H030 has a two channel multiplexer with the multiplexer outputs and ADC inputs internally connected. The ADC12030 family is tested with a 5 MHz clock, while the ADC12H030 family is tested with an 8 MHz clock. On request, these ADCs go through a self calibration process that adjusts linearity, zero and full-scale errors to less than ±1 LSB each.

The analog inputs can be configured to operate in various combinations of single-ended, differential, or pseudo-differential modes. A fully differential unipolar analog input range (0V to +5V) can be accommodated with a single +5V supply. In the differential modes, valid outputs are obtained even when the negative inputs are greater than the positive because of the 12-bit plus sign output data format.

The serial I/O is configured to comply with NSC MICROWIRE. For voltage references see the LM4040, LM4050 or LM4041.

Please be aware that an important notice concerning availability, standard warranty, and use in critical applications of Texas Instruments semiconductor products and disclaimers thereto appears at the end of this data sheet.

All trademarks are the property of their respective owners.

PRODUCTION DATA information is current as of publication date. Products conform to specifications per the terms of the Texas Instruments standard warranty. Production processing does not necessarily include testing of all parameters.

Copyright © 1999–2013, Texas Instruments Incorporated

ADC12038 Simplified Block Diagram

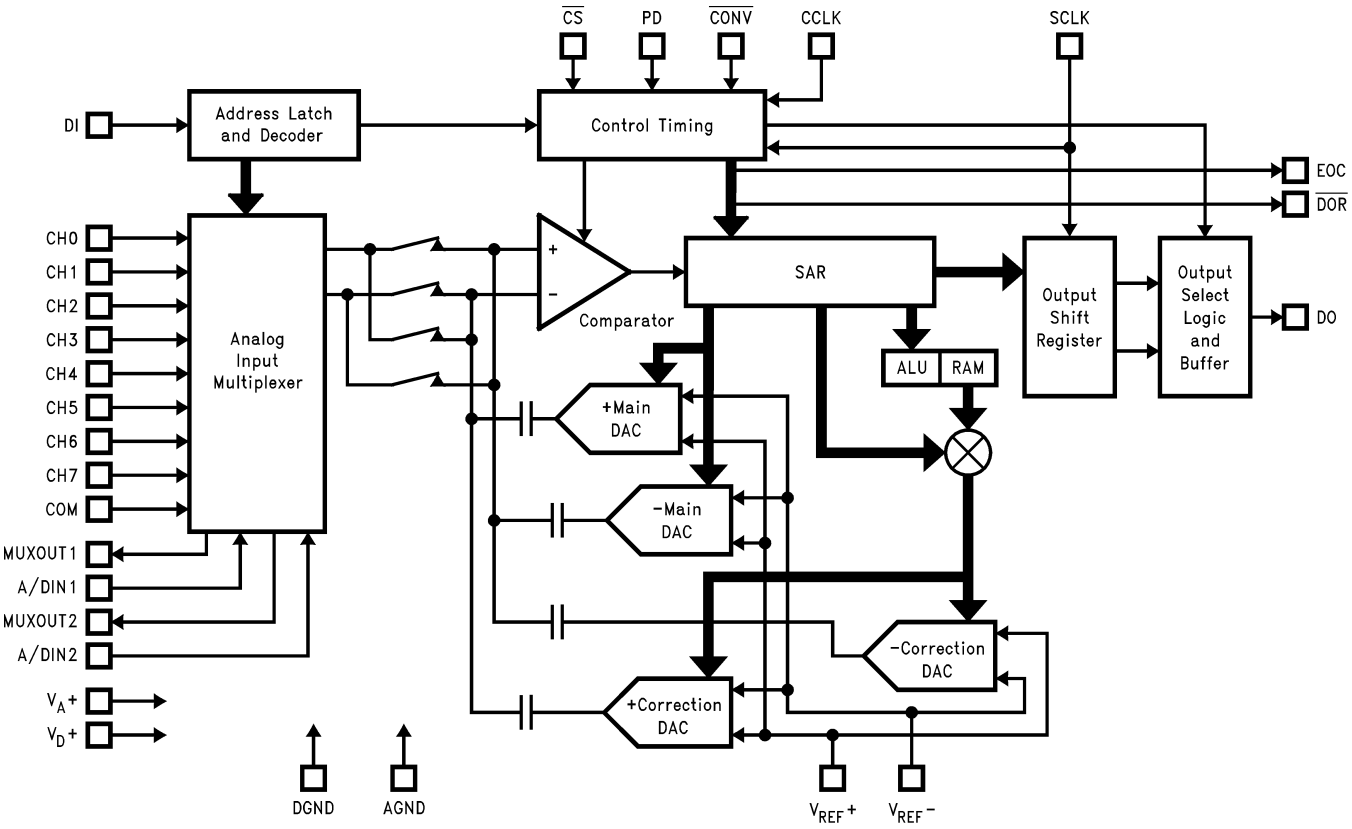

Connection Diagram

Top View

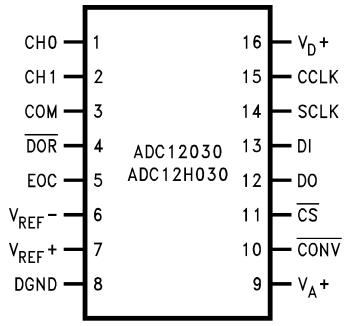

Figure 1. 16-Pin Wide Body SOIC Package
See Package Number DW0016B

Top View

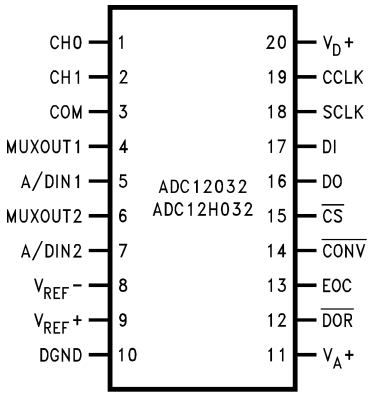

Figure 2. 20-Pin Wide Body SOIC Package
See Package Number DW0020B

Copyright © 1999–2013, Texas Instruments Incorporated

Top View

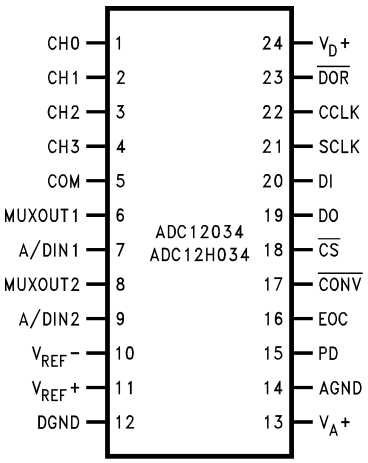

Figure 3. 24-Pin Wide Body SOIC, PDIP, SSOP Packages See Package Numbers DW0024B, NAM0024D, DB0024A

Top View

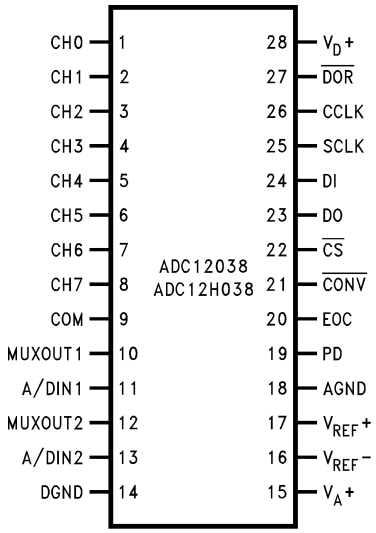

Figure 4. 28-Pin Wide Body SOIC Package See Package Number DW0028B

PIN DESCRIPTIONS

Pin Name	Pin Description
CH0 thru CH7	Analog Inputs to the MUX (multiplexer). A channel input is selected by the address information at the DI pin, which is loaded on the rising edge of SCLK into the address register (See Table 2, Table 3, and Table 4). The voltage applied to these inputs should not exceed V_A+ or go below V_A- or below GND. Exceeding this range on an unselected channel may corrupt the reading of a selected channel.
COM	Analog input pin that is used as a pseudo ground when the analog multiplexer is single-ended.
MUXOUT1 MUXOUT2	Multiplexer Output pins. If the multiplexer is used, these pins should be connected to the A/DIN pins, directly or through an amplifier and/of filter.
A/DIN1 A/DIN2	Converter Input pins. MUXOUT1 is usually tied to A/DIN1. MUXOUT2 is usually tied to A/DIN2. If external circuitry is placed between MUXOUT1 and A/DIN1, or MUXOUT2 and A/DIN2, it may be necessary to protect these pins against voltage overload.. The voltage at these pins should not exceed V_A^+ or go below AGND (see Figure 60).
DO	Data Output pin. This pin is an active push/pull output when $\overline{CS}$ is low. When $\overline{CS}$ is high, this output is TRI-STATE. The conversion result (D0–D12) and converter status data are clocked out by the falling edge of SCLK on this pin. The word length and format of this result can vary (see Table 1). The word length and format are controlled by the data shifted into the multiplexer address and mode select register (see Table 5).
DI	Serial Data input pin. The data applied to this pin is shifted by the rising edge of SCLK into the multiplexer address and mode select register. Table 2 through Table 5 show the assignment of the multiplexer address and the mode select data.
EOC	This pin is an active push/pull output which indicates the status of the ADC12030/2/4/8. A logic low on this pin indicates that the ADC is busy with a conversion, Auto Calibration, Auto Zero or power down cycle. The rising edge of EOC signals the end of one of these cycles.
$\overline{CONV}$	A logic low is required at this pin to program any mode or to change the ADC's configuration as listed in Mode Programming Table 5. When this pin is high, the ADC is placed in the read data only mode. While in the read data only mode, bringing $\overline{CS}$ low and pulsing SCLK will only clock out the data stored in the ADCs output shift register. The data on DI will be neglected. A new conversion will not be started and the ADC will remain in the mode and/or configuration previously programmed. Read data only cannot be performed while a conversion, Auto Cal or Auto Zero are in progress.

Copyright © 1999–2013, Texas Instruments Incorporated

PIN DESCRIPTIONS (continued)

Pin Name	Pin Description
$\overline{CS}$	Chip Select input pin. When a logic low is applied to this pin, the rising edge of SCLK shifts the data on DI into the address register. This low also brings DO out of TRI-STATE. With $\overline{CS}$ low the falling edge of SCLK shifts the data resulting from the previous ADC conversion out at the DO output, with the exception of the first bit of data. When $\overline{CS}$ is low continuously, the first bit of the data is clocked out on the rising edge of EOC (end of conversion). When $\overline{CS}$ is toggled the falling edge of $\overline{CS}$ always clocks out the first bit of data. $\overline{CS}$ should be brought low while SCLK is low. The falling edge of $\overline{CS}$ interrupts a conversion in progress and starts the sequence for a new conversion. When $\overline{CS}$ is brought back low during a conversion, that conversion is prematurely terminated. The data in the output latches may be corrupted. Therefore, when $\overline{CS}$ is brought low during a conversion in progress, the data output at that time should be ignored. $\overline{CS}$ may also be left continuously low. In this case it is imperative that the correct number of SCLK pulses be applied to the ADC in order to remain synchronous. After the ADC supply power is applied the device expects to see 13 clock pulses for each I/O sequence. The number of clock pulses the ADC expects is the same as the digital output word length. This word length can be modified by the data shifted in on the DO pin. Table 5 details the data required.
$\overline{DOR}$	Data Output Ready pin. This pin is an active push/pull output which is low when the conversion result is being shifted out and goes high to signal that all the data has been shifted out.
SCLK	Serial Data Clock input. The clock applied to this input controls the rate at which the serial data exchange occurs. The rising edge loads the information on the DI pin into the multiplexer address and mode select shift register. This address controls which channel of the analog input multiplexer (MUX) is selected and the mode of operation for the ADC. With $\overline{CS}$ low the falling edge of SCLK shifts the data resulting from the previous ADC conversion out on DO, with the exception of the first bit of data. When $\overline{CS}$ is low continuously, the first bit of the data is clocked out on the rising edge of EOC (end of conversion). When $\overline{CS}$ is toggled the falling edge of $\overline{CS}$ always clocks out the first bit of data. $\overline{CS}$ should be brought low when SCLK is low. The rise and fall times of the clock edges should not exceed 1 µs.
CCLK	Conversion Clock input. The clock applied to this input controls the successive approximation conversion time interval and the acquisition time. The rise and fall times of the clock edges should not exceed 1 µs.
$V_{REF}+$	Positive analog voltage reference input. In order to maintain accuracy, the voltage range of V_{REF} ($V_{REF} = V_{REF}+ - V_{REF}-$) is 1 V_{DC} to 5.0 V_{DC} and the voltage at $V_{REF}+$ cannot exceed V_A+. See Figure 59 for recommended bypassing.
$V_{REF}-$	The negative analog voltage reference input. In order to maintain accuracy, the voltage at this pin must not go below GND or exceed V_A+. (See Figure 59).
PD	Power Down pin. When PD is high the ADC is powered down; when PD is low the ADC is powered up, or active. The ADC takes a maximum of 250 µs to power up after the command is given.
V_A^+ V_D^+	These are the analog and digital power supply pins. V_A^+ and V_D^+ are not connected together on the chip. These pins should be tied to the same supply voltage and bypassed separately (see Figure 59). The operating voltage range of V_A+ and V_D+ is 4.5 V_{DC} to 5.5 V_{DC}.
DGND	The digital ground pin (see Figure 59).
AGND	The analog ground pin (see Figure 59).

These devices have limited built-in ESD protection. The leads should be shorted together or the device placed in conductive foam during storage or handling to prevent electrostatic damage to the MOS gates.

Copyright © 1999–2013, Texas Instruments Incorporated

Absolute Maximum Ratings (1)(2)(3)

Positive Supply Voltage	($V^+ = V_A+ = V_D+$)	6.5V
Voltage at Inputs and Outputs	except CH0–CH7 and COM	−0.3V to (V^+ +0.3V)
Voltage at Analog Inputs	CH0–CH7 and COM	GND −5V to (V^+ +5V)
$\lvert V_A+ - V_D+\rvert$		300 mV
Input Current at Any Pin (4)		±30 mA
Package Input Current (4)		±120 mA
Package Dissipation at		
T_A = 25°C (5)		500 mW
ESD Susceptibility (6)		
Human Body Model		1500V
Soldering Information		
PDIP Package (10 seconds)		260°C
SOIC Package (7)		
Vapor Phase (60 seconds)		215°C
Infrared (15 seconds)		220°C
Storage Temperature		−65°C to +150°C

(1) All voltages are measured with respect to GND, unless otherwise specified.
(2) Absolute Maximum Ratings indicate limits beyond which damage to the device may occur. Operating Ratings indicate conditions for which the device is functional, but do not ensure specific performance limits. For ensured specifications and test conditions, see the Electrical Characteristics. The ensured specifications apply only for the test conditions listed. Some performance characteristics may degrade when the device is not operated under the listed test conditions.
(3) If Military/Aerospace specified devices are required, please contact the Texas Instruments Sales Office/ Distributors for availability and specifications.
(4) When the input voltage (V_{IN}) at any pin exceeds the power supplies (V_{IN} < GND or V_{IN} > V_A+ or V_D+), the current at that pin should be limited to 30 mA. The 120 mA maximum package input current rating limits the number of pins that can safely exceed the power supplies with an input current of 30 mA to four.
(5) The maximum power dissipation must be derated at elevated temperatures and is dictated by $T_J$max, θ_{JA} and the ambient temperature, T_A. The maximum allowable power dissipation at any temperature is $P_D = (T_J\text{max} - T_A)/\theta_{JA}$ or the number given in the Absolute Maximum Ratings, whichever is lower.
(6) The human body model is a 100 pF capacitor discharged through a 1.5 kΩ resistor into each pin.
(7) See AN450 “Surface Mounting Methods and Their Effect on Product Reliability” or the section titled “Surface Mount” found in any post 1986 Linear Data Book for other methods of soldering surface mount devices.

Operating Ratings (1)(2)

Operating Temperature Range	$T_{MIN} \le T_A \le T_{MAX}$ −40°C ≤ T_A ≤ +85°C
Supply Voltage ($V^+ = V_A+ = V_D+$)	+4.5V to +5.5V
$\lvert V_A+ - V_D+\rvert$	≤ 100 mV
$V_{REF}+$	0V to V_A+
$V_{REF}-$	0V to ($V_{REF}+$ −1V)
V_{REF} ($V_{REF}+ - V_{REF}-$)	1V to V_A+
V_{REF} Common Mode Voltage Range $[(V_{REF}+) - (V_{REF}-)] / 2$	0.1 V_A+ to 0.6 V_A+
A/DIN1, A/DIN2, MUXOUT1 and MUXOUT2 Voltage Range	0V to V_A+
IN Common Mode Voltage Range $[(V_{IN}+) - (V_{IN}-)] / 2$	0V to V_A+

(1) Absolute Maximum Ratings indicate limits beyond which damage to the device may occur. Operating Ratings indicate conditions for which the device is functional, but do not ensure specific performance limits. For ensured specifications and test conditions, see the Electrical Characteristics. The ensured specifications apply only for the test conditions listed. Some performance characteristics may degrade when the device is not operated under the listed test conditions.
(2) All voltages are measured with respect to GND, unless otherwise specified.

Copyright © 1999–2013, Texas Instruments Incorporated

Package Thermal Resistance

Part Number	Thermal Resistance (θ_{JA})
ADC12(H)030CIWM	70°C/W
ADC12032CIWM	64°C/W
ADC12034CIN	42°C/W
ADC12034CIWM	57°C/W
ADC12H034CIMSA	97°C/W
ADC12(H)038CIWM	50°C/W

NOTE: Some of these devices may be obsolete or on Lifetime Buy status. Check our web site for product availability.

Converter Electrical Characteristics

The following specifications apply for $V^+ = V_A+ = V_D+ = +5.0\ V_{DC}$, $V_{REF}+ = +4.096\ V_{DC}$, $V_{REF}- = 0\ V_{DC}$, 12-bit + sign conversion mode, $f_{CK} = f_{SK} = 8$ MHz for the ADC12H030, ADC12H032, ADC12H034 and ADC12H038, $f_{CK} = f_{SK} = 5$ MHz for the ADC12030, ADC12032, ADC12034 and ADC12038, $R_S = 25\Omega$, source impedance for $V_{REF}+$ and $V_{REF}-$ ≤ 25Ω, fully-differential input with fixed 2.048V common-mode voltage, and 10(t_{CK}) acquisition time unless otherwise specified. **Boldface limits apply for $T_A = T_J = T_{MIN}$ to T_{MAX};** all other limits $T_A = T_J = 25°C$. (1)(2)(3)

Parameter		Test Conditions	Typical (4)	Limits (5)	Units (Limits)
STATIC CONVERTER CHARACTERISTICS					
	Resolution with No Missing Codes			**12 + sign**	Bits (min)
ILE	Integral Linearity Error	After Auto Cal (6)(7)	±1/2	**±1**	LSB (max)
DNL	Differential Non-Linearity	After Auto Cal		**±1**	LSB (max)
	Positive Full-Scale Error	After Auto Cal (6)(7)	±1/2	**±3.0**	LSB (max)
	Negative Full-Scale Error	After Auto Cal (6)(7)	±1/2	**±3.0**	LSB (max)
	Offset Error	After Auto Cal (8)(7) $V_{IN}(+) = V_{IN}(-) = 2.048V$	±1/2	**±2**	LSB (max)
	DC Common Mode Error	After Auto Cal (9)	±2	**±3.5**	LSB (max)

(1) Two on-chip diodes are tied to each analog input through a series resistor as shown below. Input voltage magnitude up to 5V above V_A+ or 5V below GND will not damage this device. However, errors in the conversion can occur (if these diodes are forward biased by more than 50 mV) if the input voltage magnitude of selected or unselected analog input go above V_A+ or below GND by more than 50 mV. As an example, if V_A+ is 4.5 V_{DC}, full-scale input voltage must be ≤4.55 V_{DC} to ensure accurate conversions.

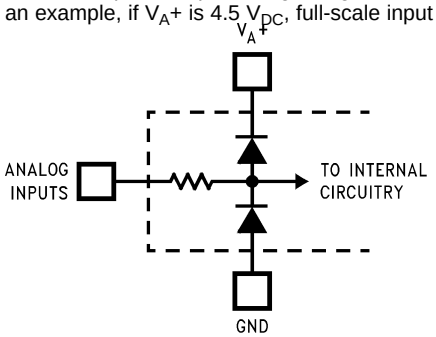

(2) To ensure accuracy, it is required that the V_A+ and V_D+ be connected together to the same power supply with separate bypass capacitors at each V^+ pin.
(3) With the test condition for V_{REF} ($V_{REF}+ - V_{REF}-$) given as +4.096V, the 12-bit LSB is 1.0 mV and the 8-bit LSB is 16.0 mV.
(4) Typical figures are at $T_J = T_A = 25°C$ and represent most likely parametric norm.
(5) Tested limits are specified to AOQL (Average Outgoing Quality Level).
(6) Positive integral linearity Error is defined as the deviation of the analog value, expressed in LSBs, from the straight line that passes through positive full-scale and zero. For Negative Integral Linearity Error, the straight line passes through negative full-scale and zero (see Figure 6 and Figure 7).
(7) The ADC12030 family's self-calibration technique ensures linearity and offset errors as specified, but noise inherent in the self-calibration process will result in a maximum repeatability uncertainty of 0.2 LSB.
(8) The human body model is a 100 pF capacitor discharged through a 1.5 kΩ resistor into each pin.
(9) The DC common-mode error is measured in the differential multiplexer mode with the assigned positive and negative input channels shorted together.

Copyright © 1999–2013, Texas Instruments Incorporated

Converter Electrical Characteristics (continued)

The following specifications apply for $V^+ = V_A+ = V_D+ = +5.0\ V_{DC}$, $V_{REF}+ = +4.096\ V_{DC}$, $V_{REF}- = 0\ V_{DC}$, 12-bit + sign conversion mode, $f_{CK} = f_{SK} = 8$ MHz for the ADC12H030, ADC12H032, ADC12H034 and ADC12H038, $f_{CK} = f_{SK} = 5$ MHz for the ADC12030, ADC12032, ADC12034 and ADC12038, $R_S = 25\Omega$, source impedance for $V_{REF}+$ and $V_{REF}- \le 25\Omega$, fully-differential input with fixed 2.048V common-mode voltage, and $10(t_{CK})$ acquisition time unless otherwise specified. **Boldface limits apply for $T_A = T_J = T_{MIN}$ to T_{MAX};** all other limits $T_A = T_J = 25°C$. (1)(2)(3)

Parameter		Test Conditions	Typical (4)	Limits (5)	Units (Limits)
TUE	Total Unadjusted Error	After Auto Cal (6)(10)(11)	±1		LSB
	Resolution with No Missing Codes	8-bit + sign mode		**8 + sign**	Bits (min)
INL	Integral Linearity Error	8-bit + sign mode (6)		**±1/2**	LSB (max)
DNL	Differential Non-Linearity	8-bit + sign mode		**±3/4**	LSB (max)
	Positive Full-Scale Error	8-bit + sign mode (6)		**±1/2**	LSB (max)
	Negative Full-Scale Error	8-bit + sign mode (6)		**±1/2**	LSB (max)
	Offset Error	8-bit + sign mode, after Auto Zero $V_{IN}(+) = V_{IN}(-) = +2.048V$ (10)		**±1/2**	LSB (max)
TUE	Total Unadjusted Error	8-bit + sign mode after Auto Zero (6)(10)(11)		**±3/4**	LSB (max)
	Multiplexer Chan-to-Chan Matching		±0.05		LSB
	Power Supply Sensitivity	$V^+ = +5V \pm 10\%$, $V_{REF} = +4.096V$			
	Offset Error + Full-Scale Error − Full-Scale Error Integral Linearity Error		±0.5 ±0.5 ±0.5 ±0.5	**±1** **±1.5** **±1.5**	LSB (max) LSB (max) LSB (max) LSB
	Output Data from "12-Bit Conversion of Offset"	(see Table 5) (12)		**+10** **−10**	LSB (max) LSB (min)
	Output Data from "12-Bit Conversion of Full-Scale"	(see Table 5) (12)		**4095** **4093**	LSB (max) LSB (min)
UNIPOLAR DYNAMIC CONVERTER CHARACTERISTICS					
S/(N+D)	Signal-to-Noise Plus Distortion Ratio	$f_{IN} = 1$ kHz, $V_{IN} = 5\ V_{P-P}$, $V_{REF}^+ = 5.0V$	69.4		dB
		$f_{IN} = 20$ kHz, $V_{IN} = 5\ V_{P-P}$, $V_{REF}^+ = 5.0V$	68.3		dB
		$f_{IN} = 40$ kHz, $V_{IN} = 5\ V_{P-P}$, $V_{REF}+ = 5.0V$	65.7		dB
	−3 dB Full Power Bandwidth	$V_{IN} = 5\ V_{P-P}$, where S/(N+D) drops 3 dB	31		kHz
DIFFERENTIAL DYNAMIC CONVERTER CHARACTERISTICS					
S/(N+D)	Signal-to-Noise Plus Distortion Ratio	$f_{IN} = 1$ kHz, $V_{IN} = \pm5V$, $V_{REF}^+ = 5.0V$	77.0		dB
		$f_{IN} = 20$ kHz, $V_{IN} = \pm5V$, $V_{REF}^+ = 5.0V$	73.9		dB
		$f_{IN} = 40$ kHz, $V_{IN} = \pm5V$, $V_{REF}^+ = 5.0V$	67.0		dB
	−3 dB Full Power Bandwidth	$V_{IN} = \pm5V$, where S/(N+D) drops 3 dB	40		kHz
REFERENCE INPUT, ANALOG INPUTS AND MULTIPLEXER CHARACTERISTICS					
C_{REF}	Reference Input Capacitance		85		pF
$C_{A/D}$	A/DIN1, A/DIN2 Analog Input Capacitance		75		pF
	A/DIN1, A/DIN2 Analog Input Leakage Current	$V_{IN} = +5.0V$ or $V_{IN} = 0V$	±0.1	**±1.0**	µA (max)
	CH0–CH7 and COM Input Voltage			**GND − 0.05** **(V_A+) + 0.05**	V (min) V (max)
C_{CH}	CH0–CH7 and COM Input Capacitance		10		pF
C_{MUXOUT}	MUX Output Capacitance		20		pF

(10) Offset error is a measure of the deviation from the mid-scale voltage (a code of zero), expressed in LSB. It is the worst-case value of the code transitions between 1 to 0 and 0 to +1 (see Figure 8).
(11) Total unadjusted error includes offset, full-scale, linearity and multiplexer errors.
(12) The "12-Bit Conversion of Offset" and "12-Bit Conversion of Full-Scale" modes are intended to test the functionality of the device. Therefore, the output data from these modes are not an indication of the accuracy of a conversion result.

Copyright © 1999–2013, Texas Instruments Incorporated

Converter Electrical Characteristics (continued)

The following specifications apply for $V^+ = V_A+ = V_D+ = +5.0\ V_{DC}$, $V_{REF}+ = +4.096\ V_{DC}$, $V_{REF}- = 0\ V_{DC}$, 12-bit + sign conversion mode, $f_{CK} = f_{SK} = 8$ MHz for the ADC12H030, ADC12H032, ADC12H034 and ADC12H038, $f_{CK} = f_{SK} = 5$ MHz for the ADC12030, ADC12032, ADC12034 and ADC12038, $R_S = 25\Omega$, source impedance for $V_{REF}+$ and $V_{REF}-$ ≤ 25Ω, fully-differential input with fixed 2.048V common-mode voltage, and 10(t_{CK}) acquisition time unless otherwise specified. **Boldface limits apply for $T_A = T_J = T_{MIN}$ to T_{MAX};** all other limits $T_A = T_J = 25°C$. (1)(2)(3)

Parameter		Test Conditions	Typical (4)	Limits (5)	Units (Limits)
	Off Channel Leakage CH0–CH7 and COM Pins (13)	On Channel = 5V and Off Channel = 0V	−0.01	**−0.3**	µA (min)
		On Channel = 0V and Off Channel = 5V	0.01	**0.3**	µA (max)
	On Channel Leakage CH0–CH7 and COM Pins (13)	On Channel = 5V and Off Channel = 0V	0.01	**0.3**	µA (max)
		On Channel = 0V and Off Channel = 5V	−0.01	**−0.3**	µA (min)
	MUXOUT1 and MUXOUT2 Leakage Current	V_{MUXOUT} = 5.0V or V_{MUXOUT} = 0V	0.01	**0.3**	µA (max)
R_{ON}	MUX On Resistance	V_{IN} = 2.5V and V_{MUXOUT} = 2.4V	850	**1150**	Ω (max)
	R_{ON} Matching Chan-to-Chan	V_{IN} = 2.5V and V_{MUXOUT} = 2.4V	5		%
	Chan-to-Chan Crosstalk	V_{IN} = 5 V_{P-P}, f_{IN} = 40 kHz	−72		dB
	MUX Bandwidth		90		kHz

(13) Channel leakage current is measured after the channel selection.

DC and Logic Electrical Characteristics

The following specifications apply for $V^+ = V_A+ = V_D+ = +5.0\ V_{DC}$, $V_{REF}+ = +4.096\ V_{DC}$, $V_{REF}- = 0\ V_{DC}$, 12-bit + sign conversion mode, $f_{CK} = f_{SK} = 8$ MHz for the ADC12H030, ADC12H032, ADC12H034 and ADC12H038, $f_{CK} = f_{SK} = 5$ MHz for the ADC12030, ADC12032, ADC12034 and ADC12038, $R_S = 25\Omega$, source impedance for $V_{REF}+$ and $V_{REF}-$ ≤ 25Ω, fully-differential input with fixed 2.048V common-mode voltage, and 10(t_{CK}) acquisition time unless otherwise specified. **Boldface limits apply for $T_A = T_J = T_{MIN}$ to T_{MAX};** all other limits $T_A = T_J = 25°C$. (1)(2)(3)

Parameter		Test Conditions	Typical (4)	Limits (5)	Units (Limits)
CCLK, $\overline{CS}$, $\overline{CONV}$, DI, PD AND SCLK INPUT CHARACTERISTICS					
$V_{IN(1)}$	Logical “1” Input Voltage	V^+ = 5.5V		**2.0**	V (min)
$V_{IN(0)}$	Logical “0” Input Voltage	V^+ = 4.5V		**0.8**	V (max)
$I_{IN(1)}$	Logical “1” Input Current	V_{IN} = 5.0V	0.005	**1.0**	µA (max)
$I_{IN(0)}$	Logical “0” Input Current	V_{IN} = 0V	−0.005	**−1.0**	µA (min)
DO, EOC AND $\overline{DOR}$ DIGITAL OUTPUT CHARACTERISTICS					
$V_{OUT(1)}$	Logical “1” Output Voltage	V^+ = 4.5V, I_{OUT} = −360 µA		**2.4**	V (min)
		V^+ = 4.5V, I_{OUT} = − 10 µA		**4.25**	V (min)

(1) Two on-chip diodes are tied to each analog input through a series resistor as shown below. Input voltage magnitude up to 5V above V_A+ or 5V below GND will not damage this device. However, errors in the conversion can occur (if these diodes are forward biased by more than 50 mV) if the input voltage magnitude of selected or unselected analog input go above V_A+ or below GND by more than 50 mV. As an example, if V_A+ is 4.5 V_{DC}, full-scale input voltage must be ≤4.55 V_{DC} to ensure accurate conversions.

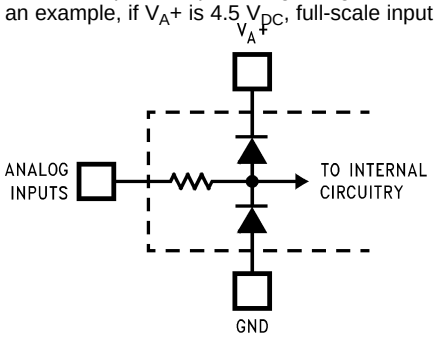

(2) To ensure accuracy, it is required that the V_A+ and V_D+ be connected together to the same power supply with separate bypass capacitors at each V^+ pin.
(3) With the test condition for V_{REF} ($V_{REF}+ - V_{REF}-$) given as +4.096V, the 12-bit LSB is 1.0 mV and the 8-bit LSB is 16.0 mV.
(4) Typical figures are at $T_J = T_A = 25°C$ and represent most likely parametric norm.
(5) Tested limits are specified to AOQL (Average Outgoing Quality Level).

Copyright © 1999–2013, Texas Instruments Incorporated

DC and Logic Electrical Characteristics (continued)

The following specifications apply for $V^+ = V_A+ = V_D+ = +5.0\ V_{DC}$, $V_{REF}+ = +4.096\ V_{DC}$, $V_{REF}- = 0\ V_{DC}$, 12-bit + sign conversion mode, $f_{CK} = f_{SK} = 8$ MHz for the ADC12H030, ADC12H032, ADC12H034 and ADC12H038, $f_{CK} = f_{SK} = 5$ MHz for the ADC12030, ADC12032, ADC12034 and ADC12038, $R_S = 25\Omega$, source impedance for $V_{REF}+$ and $V_{REF}- \le 25\Omega$, fully-differential input with fixed 2.048V common-mode voltage, and $10(t_{CK})$ acquisition time unless otherwise specified. **Boldface limits apply for $T_A = T_J = T_{MIN}$ to T_{MAX};** all other limits $T_A = T_J = 25°C$. (1)(2)(3)

Parameter		Test Conditions	Typical (4)	Limits (5)	Units (Limits)
$V_{OUT(0)}$	Logical "0" Output Voltage	$V^+ = 4.5V$, $I_{OUT} = 1.6$ mA		**0.4**	V (max)
I_{OUT}	TRI-STATE Output Current	$V_{OUT} = 0V$	−0.1	**−3.0**	µA (max)
		$V_{OUT} = 5V$	0.1	**3.0**	µA (max)
$+I_{SC}$	Output Short Circuit Source Current	$V_{OUT} = 0V$	14	**6.5**	mA (min)
$-I_{SC}$	Output Short Circuit Sink Current	$V_{OUT} = V_D+$	16	**8.0**	mA (min)
POWER SUPPLY CHARACTERISTICS					
I_D+	Digital Supply Current ADC12030, ADC12032, ADC12034 and ADC12038	Awake $\overline{CS}$ = HIGH, Powered Down, CCLK on $\overline{CS}$ = HIGH, Powered Down, CCLK off	1.6 600 20	**2.5**	mA (max) µA µA
	Digital Supply Current ADC12H030, ADC12H032, ADC12H034 and ADC12H038	Awake $\overline{CS}$ = HIGH, Powered Down, CCLK on $\overline{CS}$ = HIGH, Powered Down, CCLK off	2.3 0.9 20	**3.2**	mA mA µA
I_A+	Positive Analog Supply Current	Awake $\overline{CS}$ = HIGH, Powered Down, CCLK on $\overline{CS}$ = HIGH, Powered Down, CCLK off	2.7 10 0.1	**4.0**	mA (max) µA µA
I_{REF}	Reference Input Current	Awake $\overline{CS}$ = HIGH, Powered Down	70 0.1		µA µA

AC Electrical Characteristics

The following specifications apply for $V^+ = V_A+ = V_D+ = +5.0\ V_{DC}$, $V_{REF}+ = +4.096\ V_{DC}$, $V_{REF}- = 0\ V_{DC}$, 12-bit + sign conversion mode, $t_r = t_f = 3$ ns, $f_{CK} = f_{SK} = 8$ MHz for the ADC12H030, ADC12H032, ADC12H034 and ADC12H038, $f_{CK} = f_{SK} = 5$ MHz for the ADC12030, ADC12032, ADC12034 and ADC12038, $R_S = 25\Omega$, source impedance for $V_{REF}+$ and $V_{REF}- \le 25\Omega$, fully-differential input with fixed 2.048V common-mode voltage, and $10(t_{CK})$ acquisition time unless otherwise specified. **Boldface limits apply for $T_A = T_J = T_{MIN}$ to T_{MAX};** all other limits $T_A = T_J = 25°C$. (1)

Parameter		Test Conditions	Typical (2)	ADC12H030/2/4/8 Limits (3)	ADC12030/2/4/8 Limits (3)	Units (Limits)
f_{CK}	Conversion Clock (CCLK) Frequency		10 1	**8**	**5**	MHz (max) MHz (min)
f_{SK}	Serial Data Clock SCLK Frequency		10 0	**8**	**5**	MHz (max) Hz (min)
	Conversion Clock Duty Cycle			**40** **60**	**40** **60**	% (min) % (max)
	Serial Data Clock Duty Cycle			**40** **60**	**40** **60**	% (min) % (max)
t_C	Conversion Time	12-Bit + Sign or 12-Bit	$44(t_{CK})$	**$44(t_{CK})$** **5.5**	**$44(t_{CK})$** **8.8**	(max) µs (max)
		8-Bit + Sign or 8-Bit	$21(t_{CK})$	**$21(t_{CK})$** **2.625**	**$21(t_{CK})$** **4.2**	(max) µs (max)

(1) Timing specifications are tested at the TTL logic levels, $V_{IL} = 0.4V$ for a falling edge and $V_{IH} = 2.4V$ for a rising edge. TRI-STATE output voltage is forced to 1.4V.
(2) Typical figures are at $T_J = T_A = 25°C$ and represent most likely parametric norm.
(3) Tested limits are specified to AOQL (Average Outgoing Quality Level).

Copyright © 1999–2013, Texas Instruments Incorporated

AC Electrical Characteristics (continued)

The following specifications apply for $V^+ = V_A+ = V_D+ = +5.0\ V_{DC}$, $V_{REF}+ = +4.096\ V_{DC}$, $V_{REF}- = 0\ V_{DC}$, 12-bit + sign conversion mode, $t_r = t_f = 3$ ns, $f_{CK} = f_{SK} = 8$ MHz for the ADC12H030, ADC12H032, ADC12H034 and ADC12H038, $f_{CK} = f_{SK} = 5$ MHz for the ADC12030, ADC12032, ADC12034 and ADC12038, $R_S = 25\Omega$, source impedance for $V_{REF}+$ and $V_{REF}- \leq 25\Omega$, fully-differential input with fixed 2.048V common-mode voltage, and $10(t_{CK})$ acquisition time unless otherwise specified. **Boldface limits apply for $T_A = T_J = T_{MIN}$ to T_{MAX};** all other limits $T_A = T_J = 25°C$. (1)

Parameter		Test Conditions	Typical (2)	ADC12H030/2/4/8 Limits (3)	ADC12030/2/4/8 Limits (3)	Units (Limits)
t_A	Acquisition Time (4)	6 Cycles Programmed	$6(t_{CK})$	**$6(t_{CK})$**	**$6(t_{CK})$**	(min)
				$7(t_{CK})$	**$7(t_{CK})$**	(max)
				0.75	**1.2**	µs (min)
				0.875	**1.4**	µs (max)
		10 Cycles Programmed	$10(t_{CK})$	**$10(t_{CK})$**	**$10(t_{CK})$**	(min)
				$11(t_{CK})$	**$11(t_{CK})$**	(max)
				1.25	**2.0**	µs (min)
				1.375	**2.2**	µs (max)
		18 Cycles Programmed	$18(t_{CK})$	**$18(t_{CK})$**	**$18(t_{CK})$**	(min)
				$19(t_{CK})$	**$19(t_{CK})$**	(max)
				2.25	**3.6**	µs (min)
				2.375	**3.8**	µs (max)
		34 Cycles Programmed	$34(t_{CK})$	**$34(t_{CK})$**	**$34(t_{CK})$**	(min)
				$35(t_{CK})$	**$35(t_{CK})$**	(max)
				4.25	**6.8**	µs (min)
				4.375	**7.0**	µs (max)
t_{CKAL}	Self-Calibration Time		$4944(t_{CK})$	**$4944(t_{CK})$**	**$4944(t_{CK})$**	(max)
				618.0	**988.8**	µs (max)
t_{AZ}	Auto Zero Time		$76(t_{CK})$	**$76(t_{CK})$**	**$76(t_{CK})$**	(max)
				9.5	**15.2**	µs (max)
t_{SYNC}	Self-Calibration or Auto Zero Synchronization Time from DOR		$2(t_{CK})$	**$2(t_{CK})$**	**$2(t_{CK})$**	(min)
				$3(t_{CK})$	**$3(t_{CK})$**	(max)
				0.250	**0.40**	µs (min)
				0.375	**0.60**	µs (max)
$t_{\overline{DOR}}$	DOR High Time when $\overline{CS}$ is Low Continuously for Read Data and Software Power Up/Down		$9(t_{SK})$	**$9(t_{SK})$** **1.125**	**$9(t_{SK})$** **1.8**	(max) µs (max)
$t_{\overline{CONV}}$	$\overline{CONV}$ Valid Data Time		$8(t_{SK})$	**$8(t_{SK})$**	**$8(t_{SK})$**	(max)
				1.0	**1.6**	µs (max)

(4) If SCLK and CCLK are driven from the same clock source, then t_A is 6, 10, 18 or 34 clock periods minimum and maximum.

Copyright © 1999–2013, Texas Instruments Incorporated

Timing Characteristics

The following specifications apply for $V^+ = V_A+ = V_D+ = +5.0\ V_{DC}$, $V_{REF}+ = +4.096\ V_{DC}$, $V_{REF}- = 0\ V_{DC}$, 12-bit + sign conversion mode, $t_r = t_f = 3$ ns, $f_{CK} = f_{SK} = 8$ MHz for the ADC12H030, ADC12H032, ADC12H034 and ADC12H03, $f_{CK} = f_{SK} = 5$ MHz for the ADC12030, ADC12032, ADC12034 and ADC12038, $R_S = 25\Omega$, source impedance for $V_{REF}+$ and $V_{REF}- \le 25\Omega$, fully-differential input with fixed 2.048V common-mode voltage, and $10(t_{CK})$ acquisition time unless otherwise specified. **Boldface limits apply for $T_A = T_J = T_{MIN}$ to T_{MAX};** all other limits $T_A = T_J = 25°C$. (1)

Parameter		Test Conditions	Typical (2)	Limits (3)	Units (Limits)
t_{HPU}	Hardware Power-Up Time, Time from PD Falling Edge to EOC Rising Edge		140	**250**	µs (max)
t_{SPU}	Software Power-Up Time, Time from Serial Data Clock Falling Edge to EOC Rising Edge		140	**250**	µs (max)
t_{ACC}	Access Time Delay from $\overline{CS}$ Falling Edge to DO Data Valid		20	**50**	ns (max)
t_{SET-UP}	Set-Up Time of $\overline{CS}$ Falling Edge to Serial Data Clock Rising Edge			**30**	ns (min)
t_{DELAY}	Delay from SCLK Falling Edge to $\overline{CS}$ Falling Edge		0	**5**	ns (min)
t_{1H}, t_{0H}	Delay from $\overline{CS}$ Rising Edge to DO TRI-STATE	$R_L = 3k$, $C_L = 100$ pF	40	**100**	ns (max)
t_{HDI}	DI Hold Time from Serial Data Clock Rising Edge		5	**15**	ns (min)
t_{SDI}	DI Set-Up Time from Serial Data Clock Rising Edge		5	**10**	ns (min)
t_{HDO}	DO Hold Time from Serial Data Clock Falling Edge	$R_L = 3k$, $C_L = 100$ pF	25	**50** **5**	ns (max) ns (min)
t_{DDO}	Delay from Serial Data Clock Falling Edge to DO Data Valid		35	**50**	ns (max)
t_{RDO}	DO Rise Time, TRI-STATE to High	$R_L = 3k$, $C_L = 100$ pF	10	**30**	ns (max)
	DO Rise Time, Low to High	$R_L = 3k$, $C_L = 100$ pF	10	**30**	ns (max)
t_{FDO}	DO Fall Time, TRI-STATE to Low	$R_L = 3k$, $C_L = 100$ pF	12	**30**	ns (max)
	DO Fall Time, High to Low	$R_L = 3k$, $C_L = 100$ pF	12	**30**	ns (max)
t_{CD}	Delay from $\overline{CS}$ Falling Edge to $\overline{DOR}$ Falling Edge		25	**45**	ns (max)
t_{SD}	Delay from Serial Data Clock Falling Edge to $\overline{DOR}$ Rising Edge		25	**45**	ns (max)
C_{IN}	Capacitance of Logic Inputs		10		pF
C_{OUT}	Capacitance of Logic Outputs		20		pF

(1) Timing specifications are tested at the TTL logic levels, $V_{IL} = 0.4$V for a falling edge and $V_{IH} = 2.4$V for a rising edge. TRI-STATE output voltage is forced to 1.4V.
(2) Typical figures are at $T_J = T_A = 25°C$ and represent most likely parametric norm.
(3) Tested limits are specified to AOQL (Average Outgoing Quality Level).

Copyright © 1999–2013, Texas Instruments Incorporated

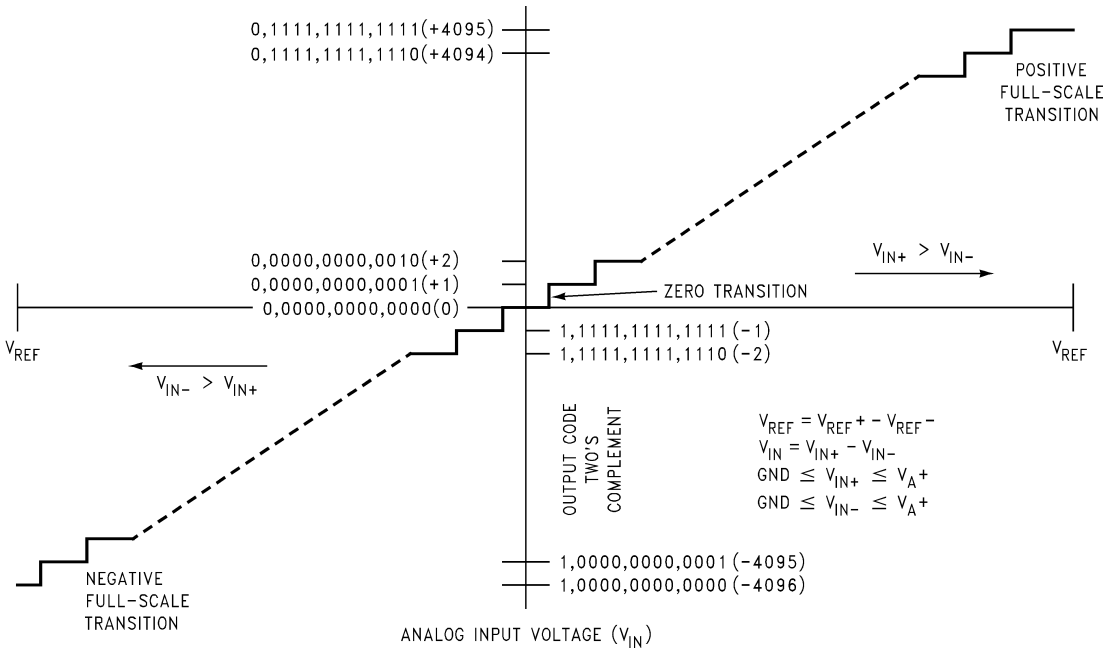

Figure 5. Transfer Characteristic

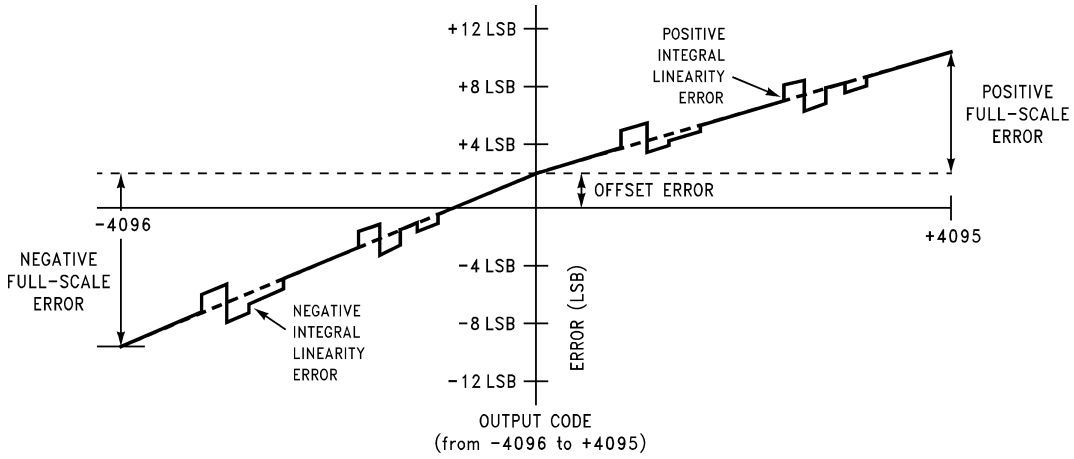

Figure 6. Simplified Error Curve vs. Output Code without Auto Calibration or Auto Zero Cycles

Copyright © 1999–2013, Texas Instruments Incorporated

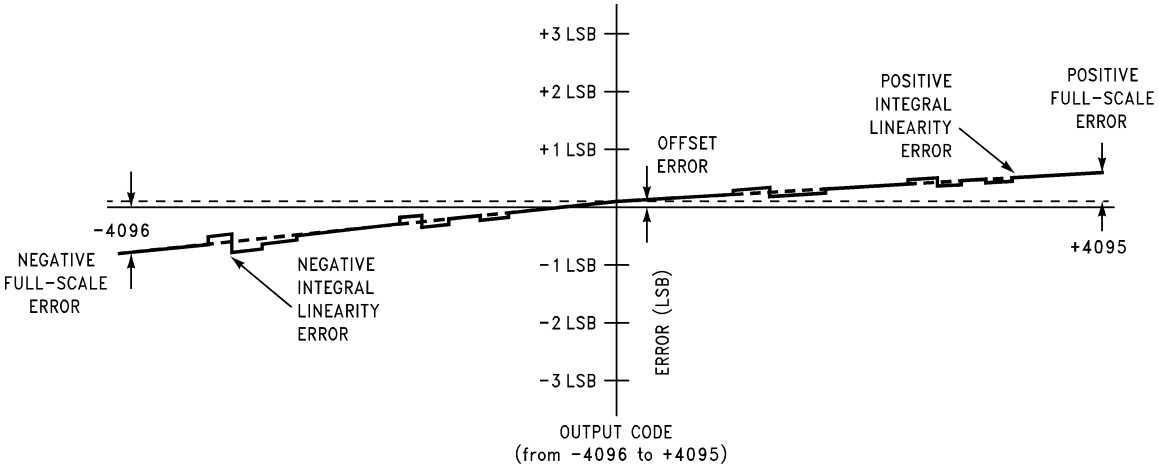

Figure 7. Simplified Error Curve vs. Output Code after Auto Calibration Cycle

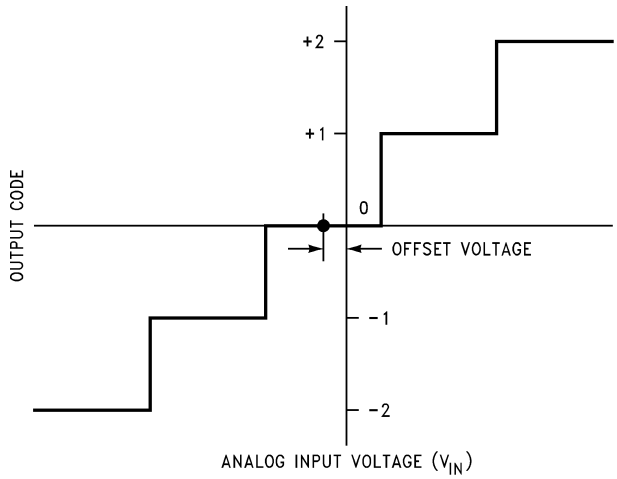

Figure 8. Offset or Zero Error Voltage

Typical Performance Characteristics (1)

The following curves apply for 12-bit + sign mode after Auto Calibration unless otherwise specified. The performance for 8-bit + sign mode is equal to or better than shown.

Linearity Error Change vs. Clock Frequency

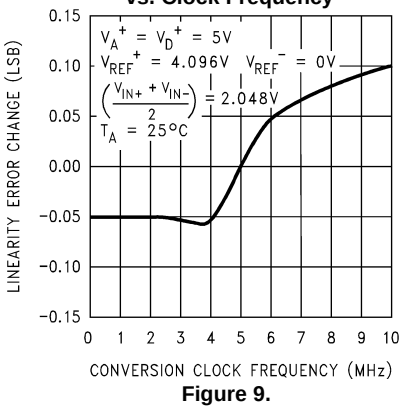

Figure 9.

Linearity Error Change vs. Temperature

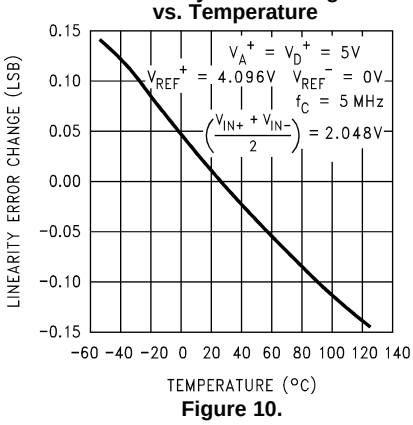

Figure 10.

Linearity Error Change vs. Reference Voltage

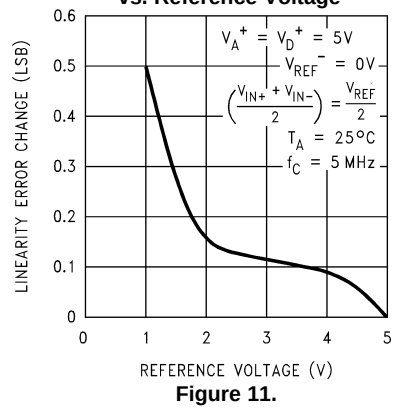

Figure 11.

Linearity Error Change vs. Supply Voltage

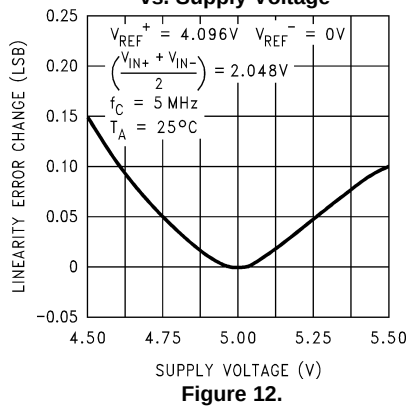

Figure 12.

Full-Scale Error Change vs. Clock Frequency

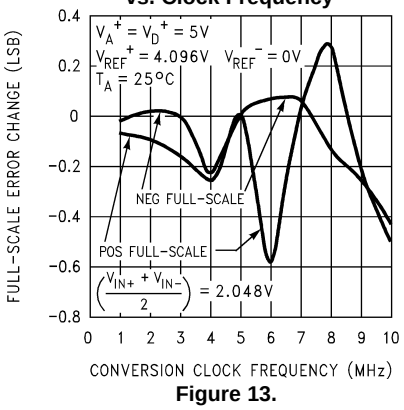

Figure 13.

Full-Scale Error Change vs. Temperature

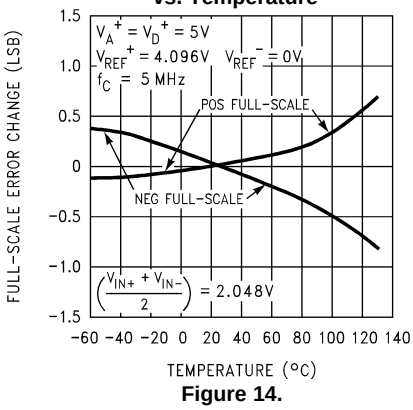

Figure 14.

(1) With the test condition for V_{REF} ($V_{REF}+ - V_{REF}-$) given as +4.096V, the 12-bit LSB is 1.0 mV and the 8-bit LSB is 16.0 mV.

Copyright © 1999–2013, Texas Instruments Incorporated

Typical Performance Characteristics (1) (continued)

The following curves apply for 12-bit + sign mode after Auto Calibration unless otherwise specified. The performance for 8-bit + sign mode is equal to or better than shown.

Full-Scale Error Change vs. Reference Voltage

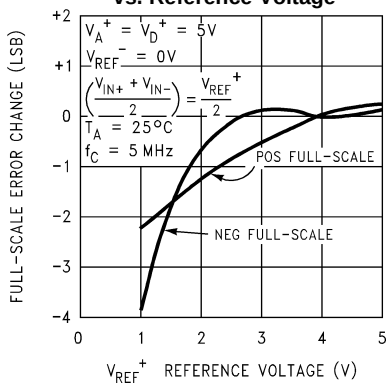

Figure 15.

Full-Scale Error Change vs. Supply Voltage

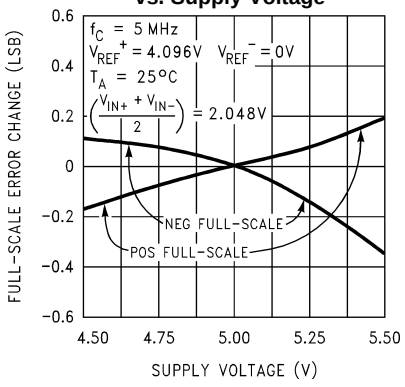

Figure 16.

Offset or Zero Error Change vs. Clock Frequency

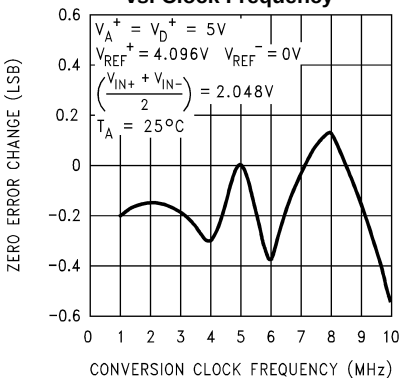

Figure 17.

Offset or Zero Error Change vs. Temperature

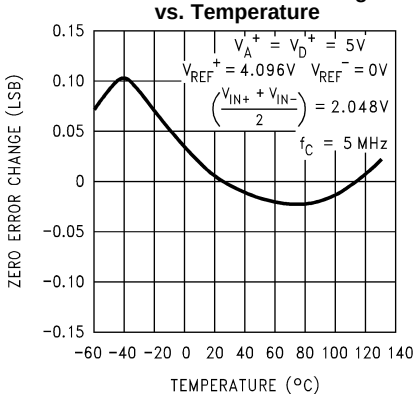

Figure 18.

Offset or Zero Error Change vs. Reference Voltage

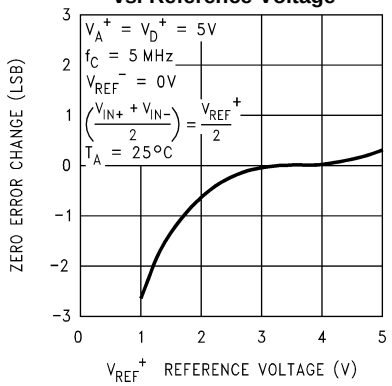

Figure 19.

Offset or Zero Error Change vs. Supply Voltage

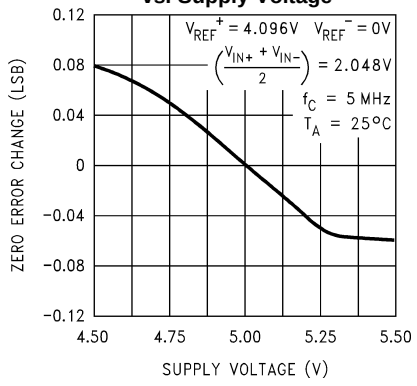

Figure 20.

Copyright © 1999–2013, Texas Instruments Incorporated

Typical Performance Characteristics [1] (continued)

The following curves apply for 12-bit + sign mode after Auto Calibration unless otherwise specified. The performance for 8-bit + sign mode is equal to or better than shown.

Analog Supply Current vs. Temperature

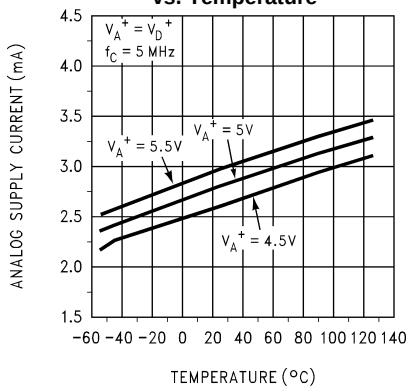

Figure 21.

Digital Supply Current vs. Clock Frequency

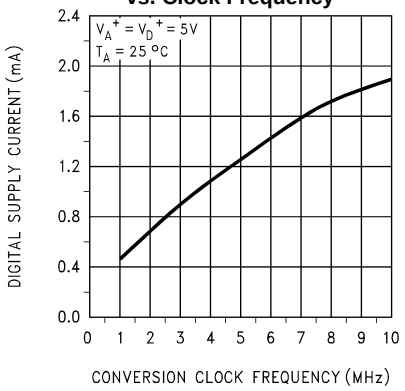

Figure 22.

Digital Supply Current vs. Temperature

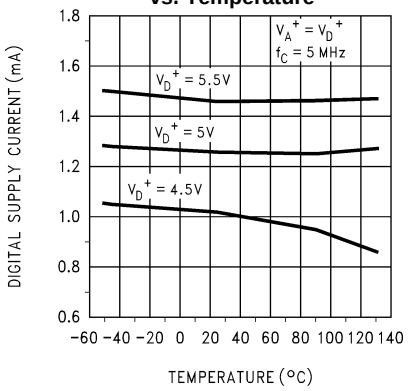

Figure 23.

Copyright © 1999–2013, Texas Instruments Incorporated

Typical Dynamic Performance Characteristics

The following curves apply for 12-bit + sign mode after Auto Calibration unless otherwise specified.

Bipolar Spectral Response with 1 kHz Sine Wave Input

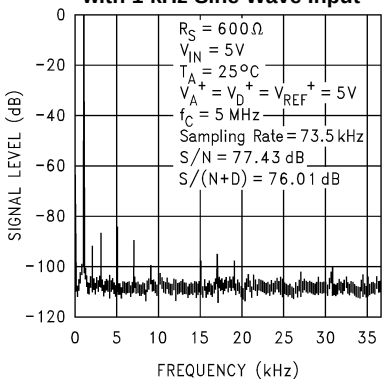

Figure 24.

Bipolar Spectral Response with 10 kHz Sine Wave Input

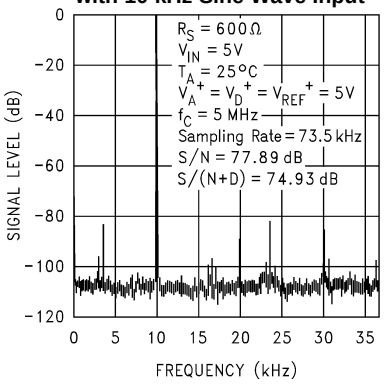

Figure 25.

Bipolar Spectral Response with 20 kHz Sine Wave Input

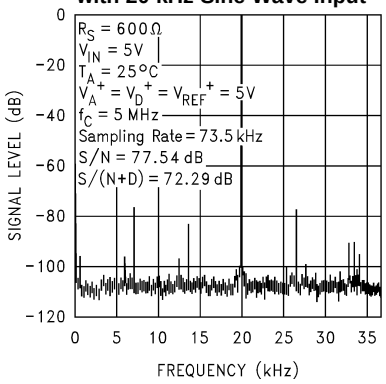

Figure 26.

Bipolar Spectral Response with 30 kHz Sine Wave Input

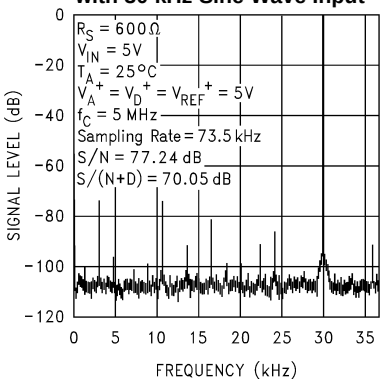

Figure 27.

Bipolar Spectral Response with 40 kHz Sine Wave Input

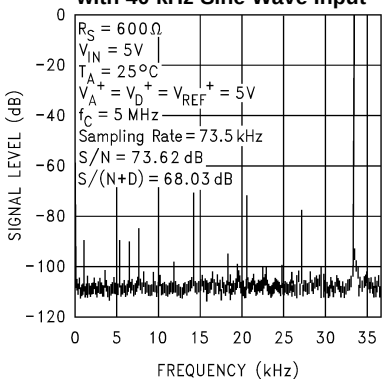

Figure 28.

Bipolar Spectral Response with 50 kHz Sine Wave Input

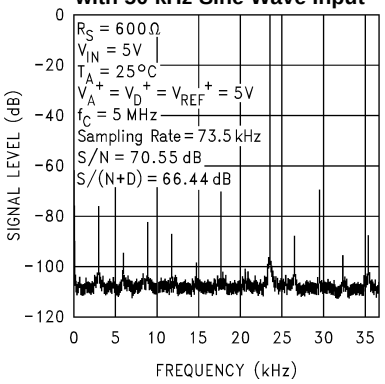

Figure 29.

Copyright © 1999–2013, Texas Instruments Incorporated

Typical Dynamic Performance Characteristics (continued)

The following curves apply for 12-bit + sign mode after Auto Calibration unless otherwise specified.

Bipolar Spurious Free Dynamic Range

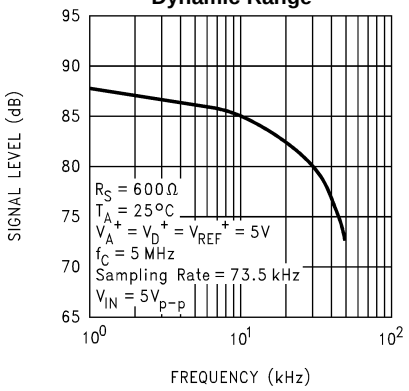

Figure 30.

Unipolar Signal-to-Noise Ratio vs. Input Frequency

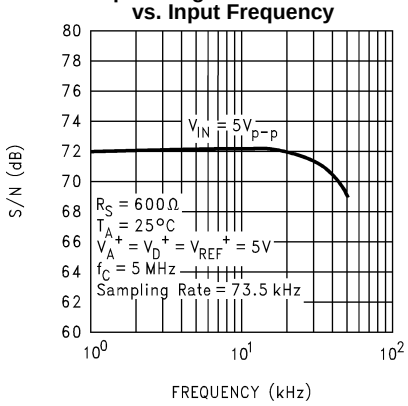

Figure 31.

Unipolar Signal-to-Noise + Distortion Ratio vs. Input Frequency

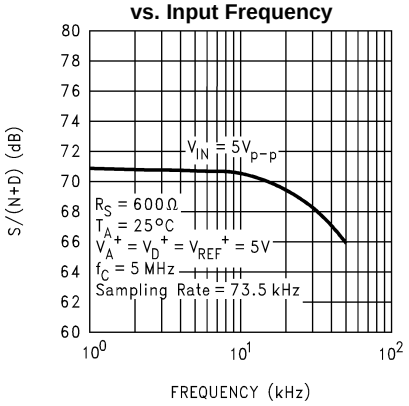

Figure 32.

Unipolar Signal-to-Noise + Distortion Ratio vs. Input Signal Level

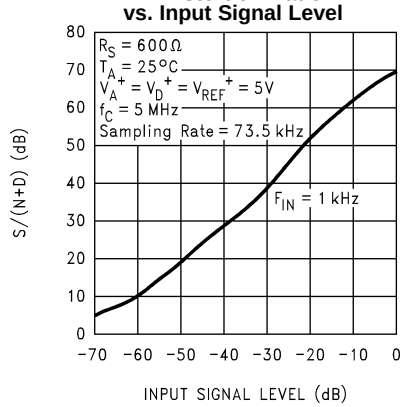

Figure 33.

Unipolar Spectral Response with 1 kHz Sine Wave Input

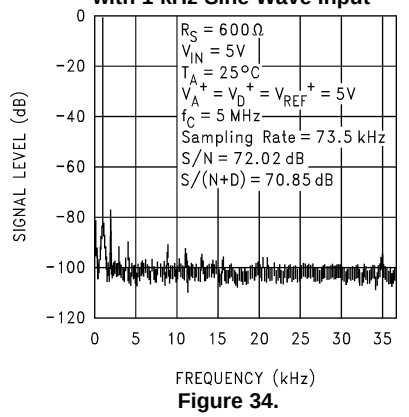

Figure 34.

Unipolar Spectral Response with 10 kHz Sine Wave Input

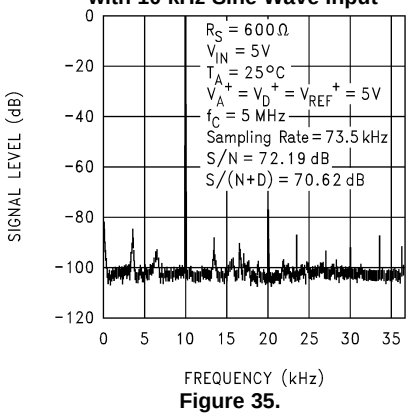

Figure 35.

Copyright © 1999–2013, Texas Instruments Incorporated

Typical Dynamic Performance Characteristics (continued)

The following curves apply for 12-bit + sign mode after Auto Calibration unless otherwise specified.

Unipolar Spectral Response with 20 kHz Sine Wave Input

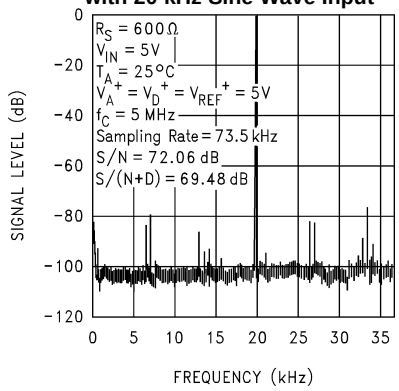

Figure 36.

Unipolar Spectral Response with 30 kHz Sine Wave Input

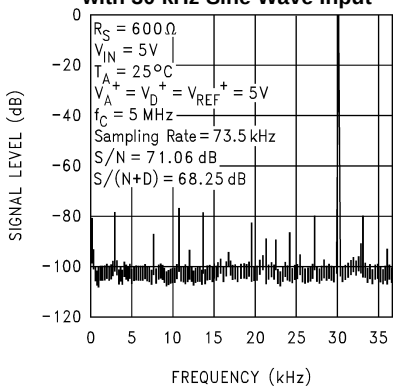

Figure 37.

Unipolar Spectral Response with 40 kHz Sine Wave Input

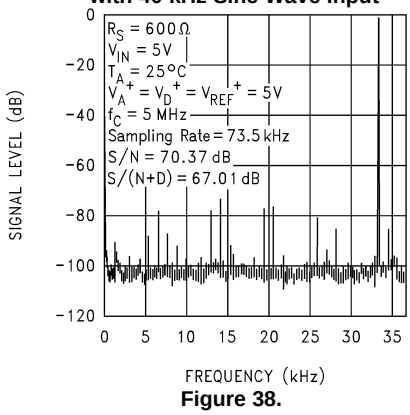

Figure 38.

Unipolar Spectral Response with 50 kHz Sine Wave Input

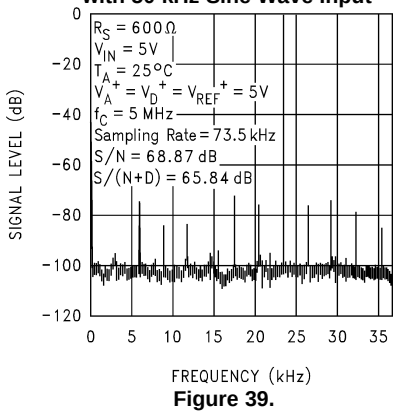

Figure 39.

Copyright © 1999–2013, Texas Instruments Incorporated

Test Circuits

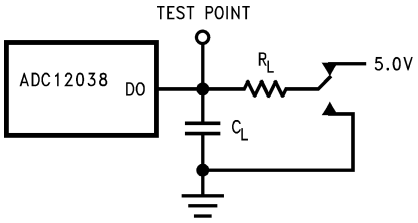

Figure 40. DO "TRI-STATE" (t_{1H}, t_{OH})

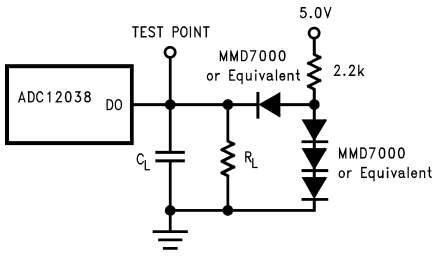

Figure 41. DO except "TRI-STATE"

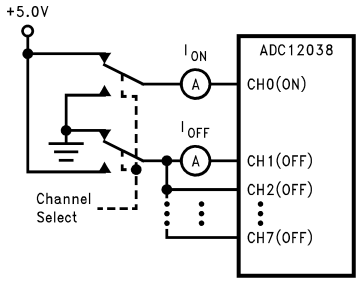

Figure 42. Leakage Current

Timing Diagrams

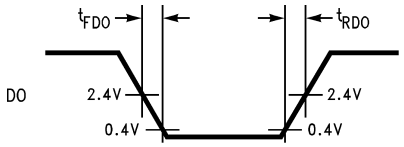

Figure 43. DO Falling and Rising Edge

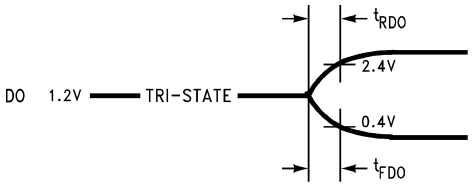

Figure 44. DO "TRI-STATE" Falling and Rising Edge

Copyright © 1999–2013, Texas Instruments Incorporated

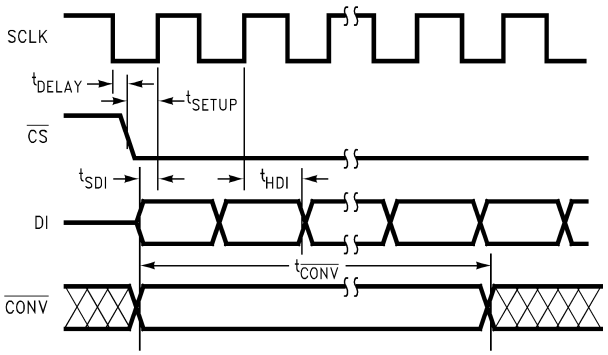

Figure 45. DI Data Input Timing

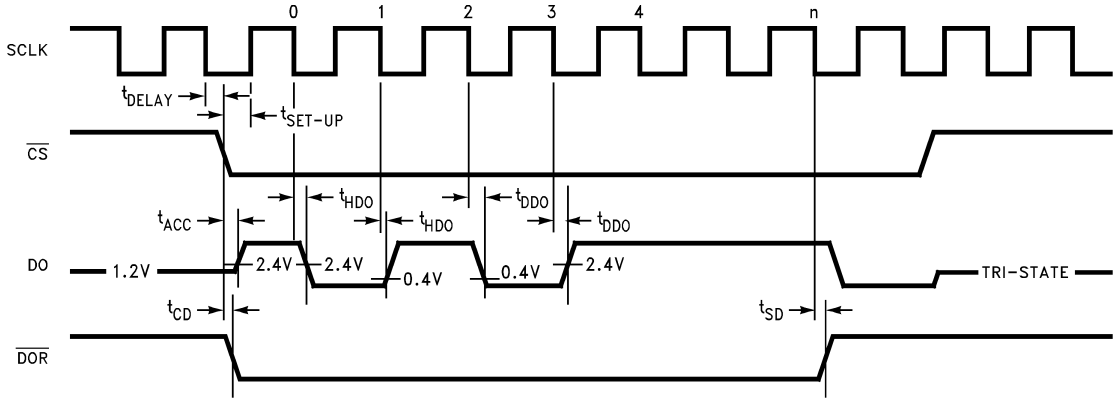

Figure 46. DO Data Output Timing Using $\overline{CS}$

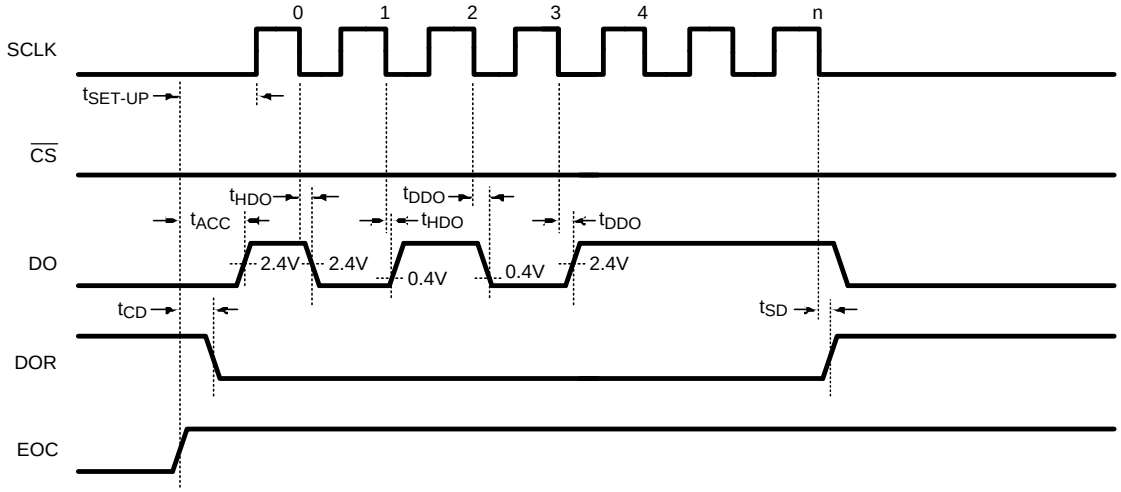

Figure 47. DO Data Output Timing with $\overline{CS}$ Continuously Low

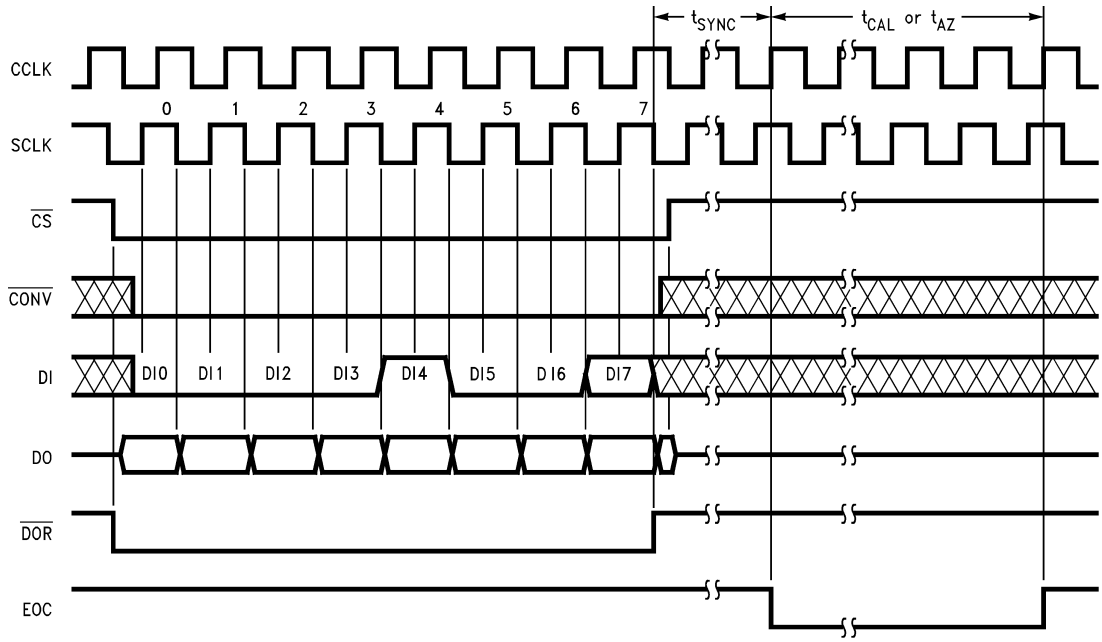

Note: DO output data is not valid during this cycle.

Figure 48. ADC12038 Auto Cal or Auto Zero

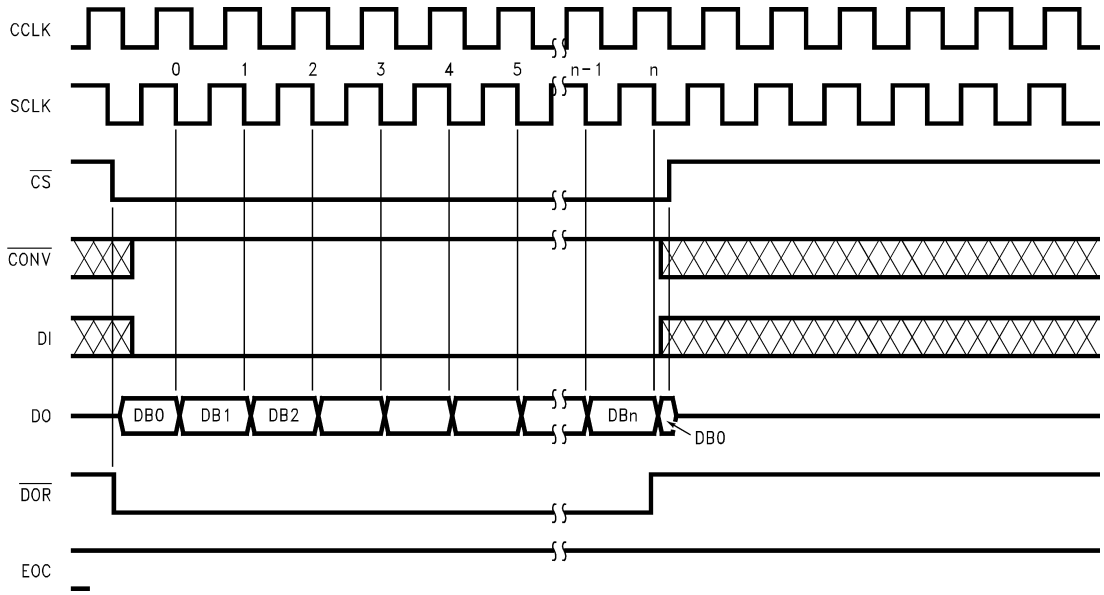

Figure 49. ADC12038 Read Data without Starting a Conversion Using $\overline{CS}$

Copyright © 1999–2013, Texas Instruments Incorporated

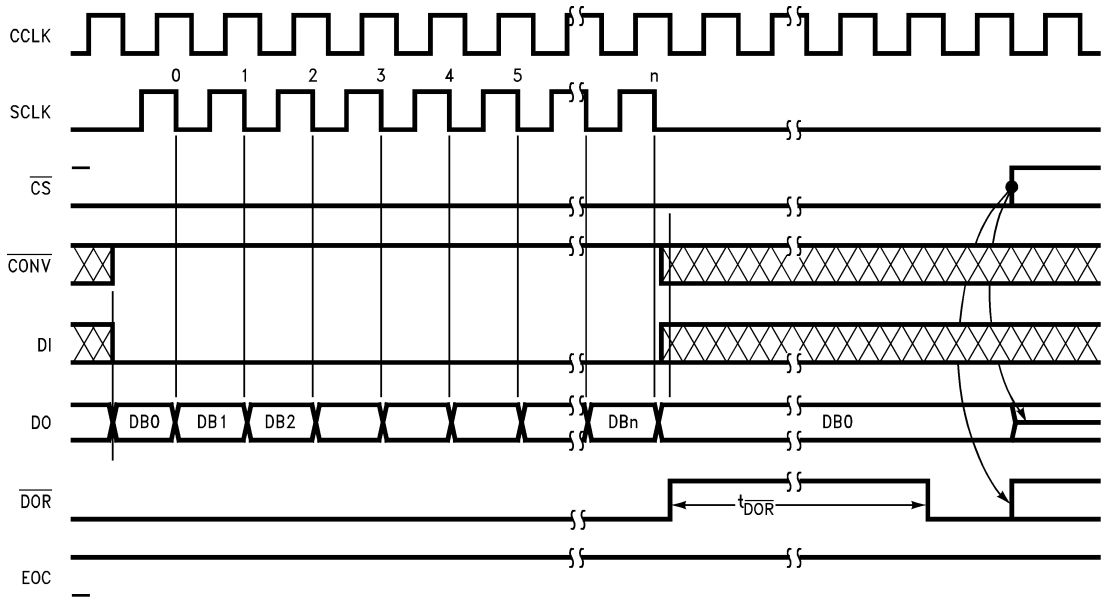

Figure 50. ADC12038 Read Data without Starting a Conversion with $\overline{CS}$ Continuously Low

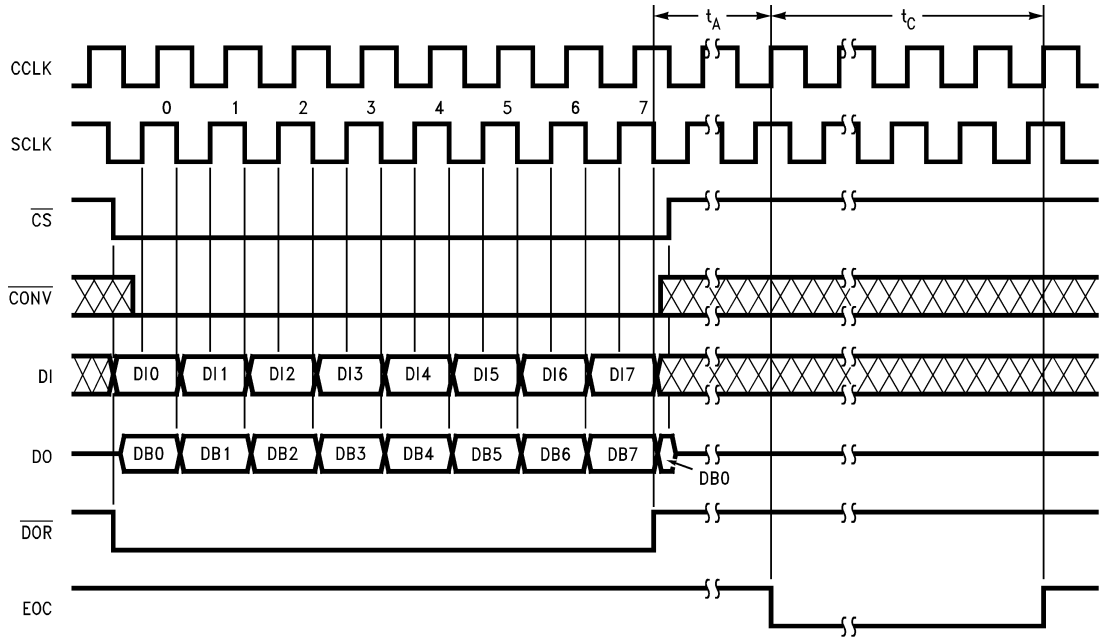

Figure 51. ADC12038 Conversion Using $\overline{CS}$ with 8-Bit Digital Output Format

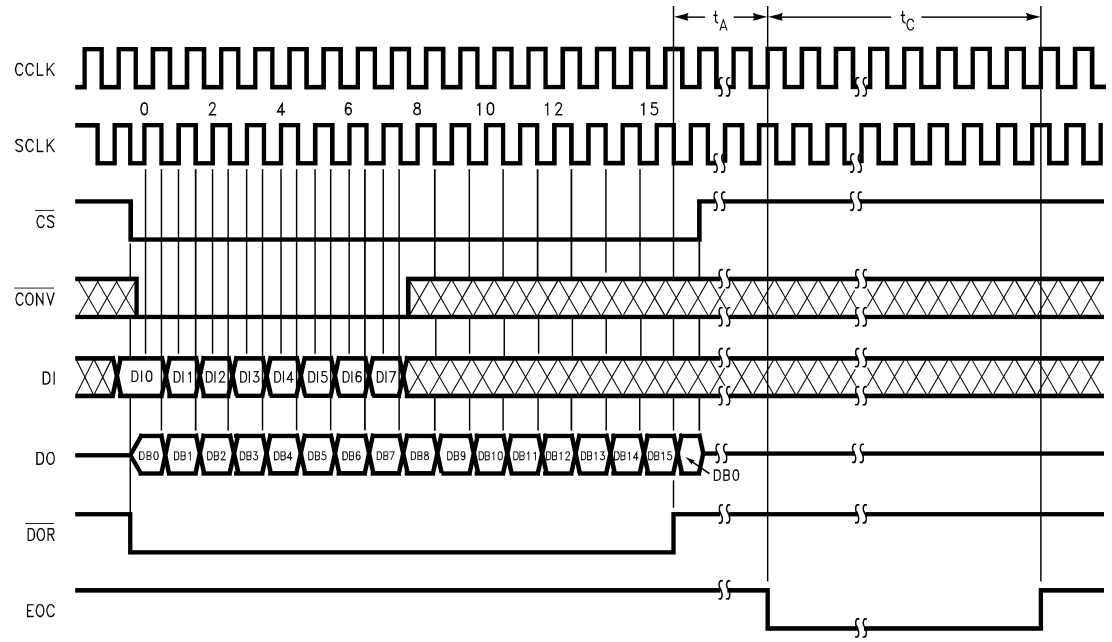

Figure 52. ADC12038 Conversion Using $\overline{CS}$ with 16-Bit Digital Output Format

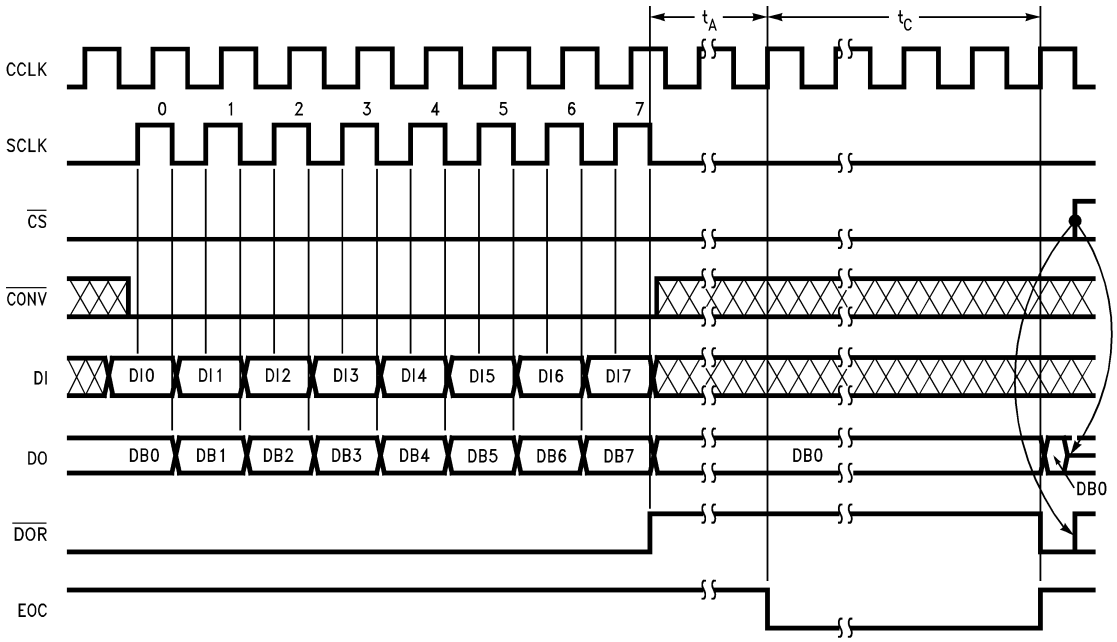

Figure 53. ADC12038 Conversion with $\overline{CS}$ Continuously Low and 8-Bit Digital Output Format

Copyright © 1999–2013, Texas Instruments Incorporated

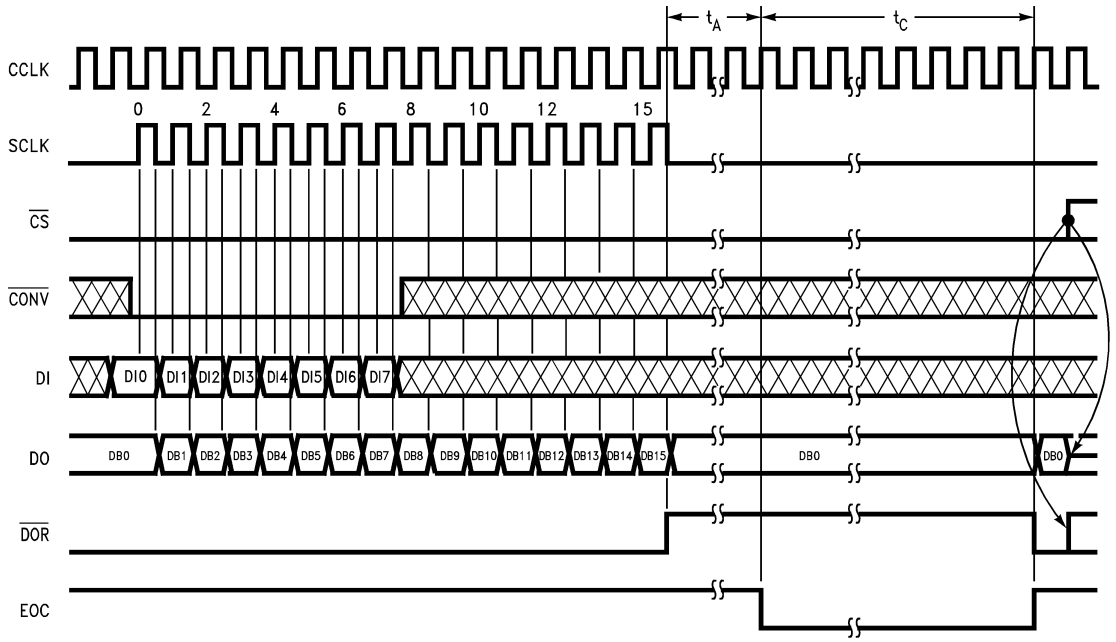

Figure 54. ADC12038 Conversion with $\overline{CS}$ Continuously Low and 16-Bit Digital Output Format

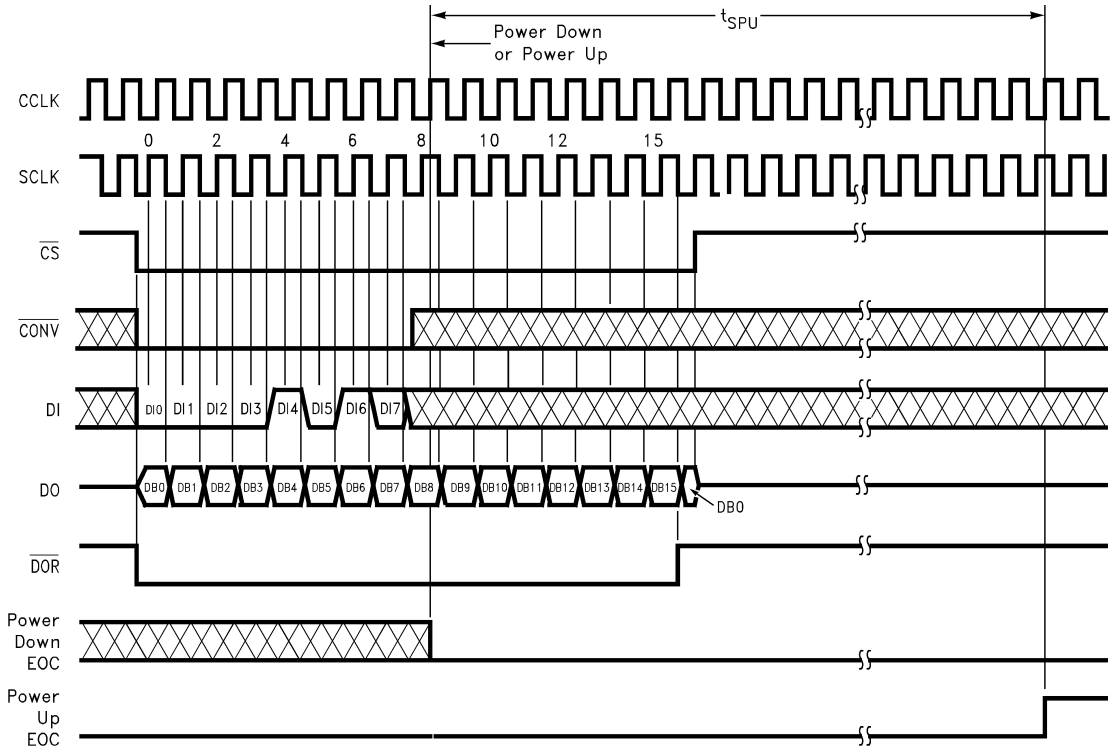

Figure 55. ADC12038 Software Power Up/Down Using $\overline{CS}$ with 16-Bit Digital Output Format

Copyright © 1999–2013, Texas Instruments Incorporated

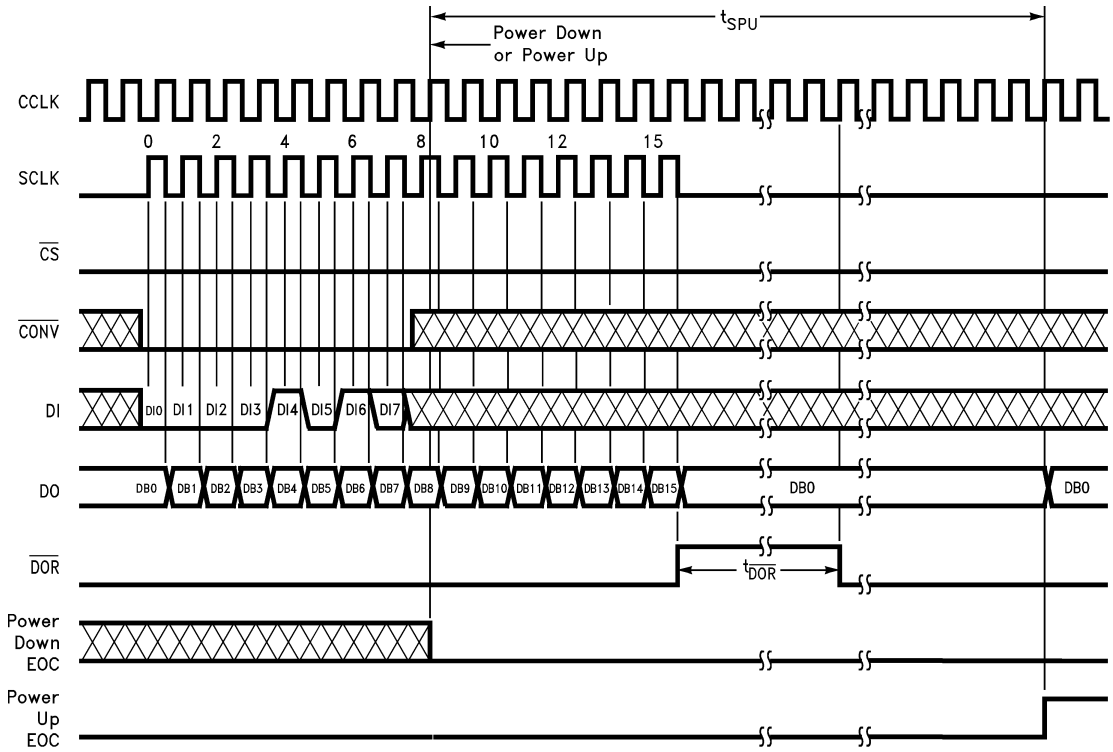

Figure 56. ADC12038 Software Power Up/Down with $\overline{CS}$ Continuously Low and 16-Bit Digital Output Format

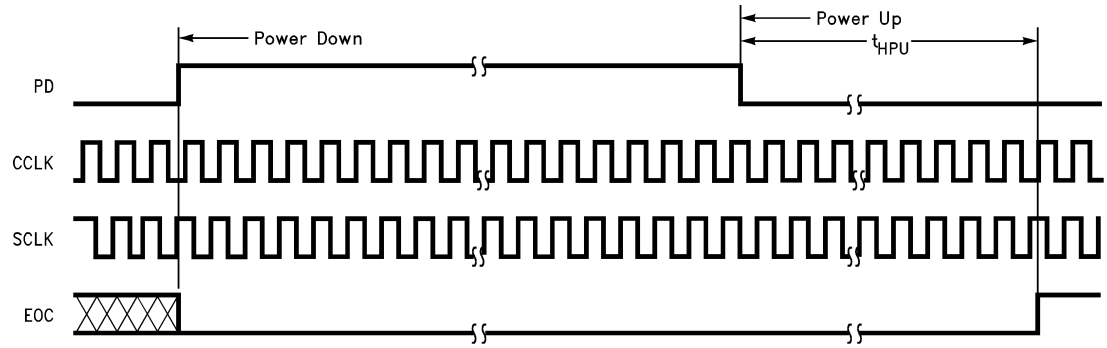

Note: Hardware power up/down may occur at any time. If PD is high while a conversion is in progress that conversion will be corrupted and erroneous data will be stored in the output shift register.

Figure 57. ADC12038 Hardware Power Up/Down

Copyright © 1999–2013, Texas Instruments Incorporated

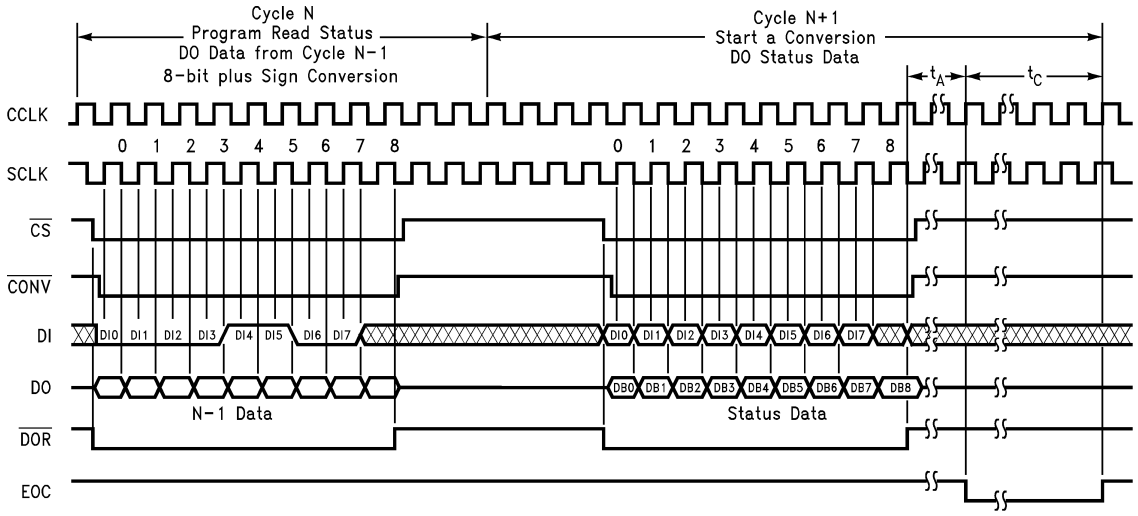

Note: In order for all 9 bits of Status Information to be accessible, the last conversion programmed before Cycle N needs to have a resolution of 8 bits plus sign, 12 bits, 12 bits plus sign, or greater.

Figure 58. ADC12038 Configuration Modification—Example of a Status Read

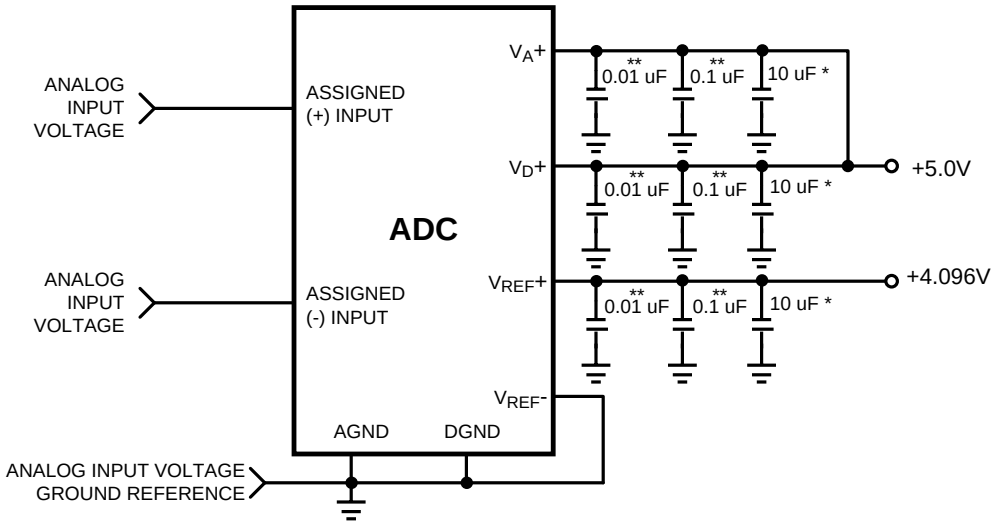

*Tantalum
**Monolithic Ceramic or better

Figure 59. Recommended Power Supply Bypassing and Grounding

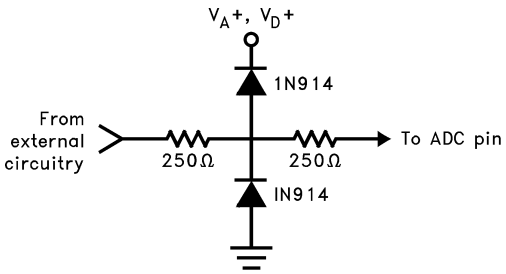

Figure 60. Protecting the MUXOUT1, MUXOUT2, A/DIN1 and A/DIN2 Analog Pins

Copyright © 1999–2013, Texas Instruments Incorporated

Format and Set-Up Tables

Table 1. Data Out Formats(1)

DO Formats			DB0	DB1	DB2	DB3	DB4	DB5	DB6	DB7	DB8	DB9	DB10	DB11	DB12	DB13	DB14	DB15	DB16
with Sign	MSB First	17 Bits	X	X	X	X	Sign	MSB	10	9	8	7	6	5	4	3	2	1	LSB
		13 Bits	Sign	MSB	10	9	8	7	6	5	4	3	2	1	LSB				
		9 Bits	Sign	MSB	6	5	4	3	2	1	LSB								
	LSB First	17 Bits	LSB	1	2	3	4	5	6	7	8	9	10	MSB	Sign	X	X	X	X
		13 Bits	LSB	1	2	3	4	5	6	7	8	9	10	MSB	Sign				
		9 Bits	LSB	1	2	3	4	5	6	MSB	Sign								
without sign	MSB First	16 Bits	0	0	0	0	MSB	10	9	8	7	6	5	4	3	2	1	LSB	
		12 Bits	MSB	10	9	8	7	6	5	4	3	2	1	LSB					
		8 Bits	MSB	6	5	4	3	2	1	LSB									
	LSB First	16 Bits	LSB	1	2	3	4	5	6	7	8	9	10	MSB	0	0	0		
		12 Bits	LSB	1	2	3	4	5	6	7	8	9	10	MSB					
		8 Bits	LSB	1	2	3	4	5	6	MSB									

(1) X = High or Low state.

Table 2. ADC12038 Multiplexer Addressing

MUX Address				Analog Channel Addressed and Assignment with A/DIN1 tied to MUXOUT1 and A/DIN2 tied to MUXOUT2									ADC Input Polarity Assignment		Multiplexer Output Channel Assignment		Mode
DI0	DI1	DI2	DI3	CH0	CH1	CH2	CH3	CH4	CH5	CH6	CH7	COM	A/DIN1	A/DIN2	MUXOUT1	MUXOUT2	
L	L	L	L	+	−								+	−	CH0	CH1	Differential
L	L	L	H			+	−						+	−	CH2	CH3	
L	L	H	L					+	−				+	−	CH4	CH5	
L	L	H	H							+	−		+	−	CH6	CH7	
L	H	L	L	−	+								−	+	CH0	CH1	
L	H	L	H			−	+						−	+	CH2	CH3	
L	H	H	L					−	+				−	+	CH4	CH5	
L	H	H	H							−	+		−	+	CH6	CH7	
H	L	L	L	+								−	+	−	CH0	COM	Single-Ended
H	L	L	H			+						−	+	−	CH2	COM	
H	L	H	L					+				−	+	−	CH4	COM	
H	L	H	H							+		−	+	−	CH6	COM	
H	H	L	L		+							−	+	−	CH1	COM	
H	H	L	H				+					−	+	−	CH3	COM	
H	H	H	L						+			−	+	−	CH5	COM	
H	H	H	H								+	−	+	−	CH7	COM	

Copyright © 1999–2013, Texas Instruments Incorporated

Table 3. ADC12034 Multiplexer Addressing

MUX Address			Analog Channel Addressed and Assignment with A/DIN1 tied to MUXOUT1 and A/DIN2 tied to MUXOUT2					ADC Input Polarity Assignment		Multiplexer Output Channel Assignment		Mode
DI0	DI1	DI2	CH0	CH1	CH2	CH3	COM	A/DIN1	A/DIN2	MUXOUT1	MUXOUT2	
L	L	L	+	−				+	−	CH0	CH1	Differential
L	L	H			+	−		+	−	CH2	CH3	
L	H	L	−	+				−	+	CH0	CH1	
L	H	H			−	+		−	+	CH2	CH3	
H	L	L	+				−	+	−	CH0	COM	Single-Ended
H	L	H			+		−	+	−	CH2	COM	
H	H	L		+			−	+	−	CH1	COM	
H	H	H				+	−	+	−	CH3	COM	

Table 4. ADC12032 and ADC12030 Multiplexer Addressing

MUX Address		Analog Channel Addressed and Assignment with A/DIN1 tied to MUXOUT1 and A/DIN2 tied to MUXOUT2			ADC Input Polarity Assignment		Multiplexer Output Channel Assignment		Mode
DI0	DI1	CH0	CH1	COM	A/DIN1	A/DIN2	MUXOUT1	MUXOUT2	
L	L	+	−		+	−	CH0	CH1	Differential
L	H	−	+		−	+	CH0	CH1	
H	L	+		−	+	−	CH0	COM	Single-Ended
H	H		+	−	+	−	CH1	COM	

NOTE

ADC12030 and ADC12H030 do not have A/DIN1, A/DIN2, MUXOUT1 and MUXOUT2 pins.

Table 5. Mode Programming (1)

ADC12038	DI0	DI1	DI2	DI3	DI4	DI5	DI6	DI7	Mode Selected (Current)	DO Format (next Conversion Cycle)
ADC12034	DI0	DI1	DI2		DI3	DI4	DI5	DI6		
ADC12030 and ADC12032	DI0	DI1			DI2	DI3	DI4	DI5		
	See Table 2, Table 3, or Table 4				L	L	L	L	12 Bit Conversion	12 or 13 Bit MSB First
	See Table 2, Table 3, or Table 4				L	L	L	H	12 Bit Conversion	16 or 17 Bit MSB First
	See Table 2, Table 3, or Table 4				L	L	H	L	8 Bit Conversion	8 or 9 Bit MSB First
	L	L	L	L	L	L	H	H	12 Bit Conversion of Full-Scale	12 or 13 Bit MSB First
	See Table 2, Table 3, or Table 4				L	H	L	L	12 Bit Conversion	12 or 13 Bit LSB First
	See Table 2, Table 3, or Table 4				L	H	L	H	12 Bit Conversion	16 or 17 Bit LSB First
	See Table 2, Table 3, or Table 4				L	H	H	L	8 Bit Conversion	8 or 9 Bit LSB First

(1) The ADC powers up with no Auto Cal, no Auto Zero, 10 CCLK acquisition time, 12-bit + sign conversion, power up, 12- or 13-bit MSB first, and user mode.
X = Don't Care

Copyright © 1999–2013, Texas Instruments Incorporated

Table 5. Mode Programming[1] (continued)

ADC12038	DI0	DI1	DI2	DI3	DI4	DI5	DI6	DI7	Mode Selected (Current)	DO Format (next Conversion Cycle)
ADC12034	DI0	DI1	DI2		DI3	DI4	DI5	DI6		
ADC12030 and ADC12032	DI0	DI1			DI2	DI3	DI4	DI5		
	L	L	L	L	L	H	H	H	12 Bit Conversion of Offset	12 or 13 Bit LSB First
	L	L	L	L	H	L	L	L	Auto Cal	No Change
	L	L	L	L	H	L	L	H	Auto Zero	No Change
	L	L	L	L	H	L	H	L	Power Up	No Change
	L	L	L	L	H	L	H	H	Power Down	No Change
	L	L	L	L	H	H	L	L	Read Status Register	No Change
	L	L	L	L	H	H	L	H	Data Out without Sign	No Change
	H	L	L	L	H	H	L	H	Data Out with Sign	No Change
	L	L	L	L	H	H	H	L	Acquisition Time—6 CCLK Cycles	No Change
	L	H	L	L	H	H	H	L	Acquisition Time—10 CCLK Cycles	No Change
	H	L	L	L	H	H	H	L	Acquisition Time—18 CCLK Cycles	No Change
	H	H	L	L	H	H	H	L	Acquisition Time—34 CCLK Cycles	No Change
	L	L	L	L	H	H	H	H	User Mode	No Change
	H	X	X	X	H	H	H	H	Test Mode (CH1–CH7 become Active Outputs)	No Change

Table 6. Conversion/Read Data Only Mode Programming

$\overline{CS}$	$\overline{CONV}$	PD	Mode
L	L	L	See Table 5 for Mode
L	H	L	Read Only (Previous DO Format). No Conversion.
H	X	L	Idle
X	X	H	Power Down

Table 7. Status Register

Status Bit Location	DB0	DB1	DB2	DB3	DB4	DB5	DB6	DB7	DB8
Status Bit	PU	PD	Cal	8 or 9	12 or 13	16 or 17	Sign	Justification	Test Mode
	Device Status			DO Output Format Status					
Function	"High" indicates a Power Up Sequence is in progress	"High" indicates a Power Down Sequence is in progress	"High" indicates an Auto Cal Sequence is in progress	"High" indicates an 8 or 9 bit format	"High" indicates a 12 or 13 bit format	"High" indicates a 16 or 17 bit format	"High" indicates that the sign bit is included. When "Low" the sign bit is not included.	When "High" the conversion result will be output MSB first. When "Low" the result will be output LSB first.	When "High" the device is in test mode. When "Low" the device is in user mode.

Copyright © 1999–2013, Texas Instruments Incorporated

APPLICATIONS INFORMATION

1.0 DIGITAL INTERFACE

1.1 Interface Concepts

The example in Figure 61 shows a typical sequence of events after the power is applied to the ADC12030/2/4/8:

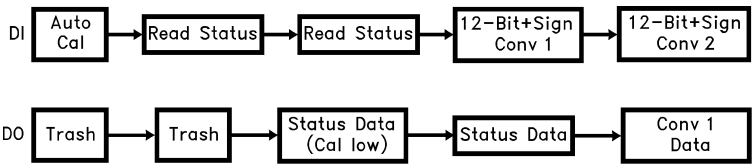

Figure 61. Typical Power Supply Power Up Sequence

The first instruction input to the ADC via DI initiates Auto Cal. The data output on DO at that time is meaningless and is completely random. To determine whether the Auto Cal has been completed, a read status instruction should be issued to the ADC. Again the data output at that time has no significance since the Auto Cal procedure modifies the data in the output shift register. To retrieve the status information, an additional read status instruction should be issued to the ADC. At this time the status data is available on DO. If the Cal signal in the status word is low, Auto Cal has been completed. Therefore, the next instruction issued can start a conversion. The data output at this time is again status information.

To keep noise from corrupting the conversion, status can not be read during a conversion. If $\overline{CS}$ is strobed and is brought low during a conversion, that conversion is prematurely ended. EOC can be used to determine the end of a conversion or the ADC controller can keep track in software of when it would be appropriate to communicate to the ADC again. Once it has been determined that a conversion has completed, another instruction can be transmitted to the ADC. The data from this conversion can be accessed when the next instruction is issued to the ADC.

Note, when $\overline{CS}$ is low continuously it is important to transmit the exact number of SCLK cycles, as shown in the timing diagrams. Not doing so will desynchronize the serial communication to the ADC. (See *Section* 1.3 $\overline{CS}$ Low Continuously Considerations.)

1.2 Changing Configuration

The configuration of the ADC12030/2/4/8 on power up defaults to 12-bit plus sign resolution, 12- or 13-bit MSB First, 10 CCLK acquisition time, user mode, no Auto Cal, no Auto Zero, and power up mode. Changing the acquisition time and turning the sign bit on and off requires an 8-bit instruction to be issued to the ADC. This instruction will not start a conversion. The instructions that select a multiplexer address and format the output data do start a conversion. Figure 62 describes an example of changing the configuration of the ADC12030/2/4/8.

During I/O sequence 1, the instruction at DI configures the ADC12030/2/4/8 to do a conversion with 12-bit +sign resolution. Notice that when the 6 CCLK Acquisition and Data Out without Sign instructions are issued to the ADC, I/O sequences 2 and 3, a new conversion is not started. The data output during these instructions is from conversion N which was started during I/O sequence 1. Figure 58 in detail the sequence of events necessary for a Data Out without Sign, Data Out with Sign, or 6/10/18/34 CCLK Acquisition time mode selection. Table 5 describes the actual data necessary to be input to the ADC to accomplish this configuration modification. The next instruction issued to the ADC, shown in Figure 62, starts conversion N+1 with 8 bits of resolution formatted MSB first. Again the data output during this I/O cycle is the data from conversion N.

The number of SCLKs applied to the ADC during any conversion I/O sequence should vary in accord with the data out word format chosen during the previous conversion I/O sequence. The various formats and resolutions available are shown in Table 1. In Figure 62, since 8-bit without sign, MSB first format was chosen during I/O sequence 4, the number of SCLKs required during I/O sequence 5 is eight. In the following I/O sequence the format changes to 12-bit without sign MSB first; therefore the number of SCLKs required during I/O sequence 6 changes accordingly to 12.

Copyright © 1999–2013, Texas Instruments Incorporated

1.3 $\overline{CS}$ Low Continuously Considerations

When $\overline{CS}$ is continuously low, it is important to transmit the exact number of SCLK pulses that the ADC expects. Not doing so will desynchronize the serial communications to the ADC. When the supply power is first applied to the ADC, it will expect to see **13 SCLK pulses** for each I/O transmission. The number of SCLK pulses that the ADC expects to see is the same as the digital output word length. The digital output word length is controlled by the Data Out (DO) format. The DO format maybe changed any time a conversion is started or when the sign bit is turned on or off. The table below details out the number of clock periods required for different DO formats:

DO Format		Number of SCLKs Expected
8-Bit MSB or LSB First	SIGN OFF	8
	SIGN ON	9
12-Bit MSB or LSB First	SIGN OFF	12
	SIGN ON	13
16-Bit MSB or LSB first	SIGN OFF	16
	SIGN ON	17

If erroneous SCLK pulses desynchronize communications, the simplest way to recover is by cycling the power supply to the device. Not being able to easily resynchronize the device is a shortcoming of leaving $\overline{CS}$ low continuously.

The number of clock pulses required for an I/O exchange may be different for the case when $\overline{CS}$ is left low continuously vs. the case when $\overline{CS}$ is cycled. Take the I/O sequence detailed in Figure 61 (Typical Power Supply Sequence) as an example. The table below lists the number of SCLK pulses required for each instruction:

Instruction	$\overline{CS}$ Low Continuously	$\overline{CS}$ Strobed
Auto Cal	13 SCLKs	8 SCLKs
Read Status	13 SCLKs	8 SCLKs
Read Status	13 SCLKs	8 SCLKs
12-Bit + Sign Conv 1	13 SCLKs	8 SCLKs
12-Bit + Sign Conv 2	13 SCLKs	13 SCLKs

1.4 Analog Input Channel Selection

The data input at DI also selects the channel configuration (see Table 2, Table 3, Table 4, and Table 5). In Figure 62 the only times when the channel configuration could be modified is during I/O sequences 1, 4, 5 and 6. Input channels are reselected before the start of each new conversion. Shown below is the data bit stream required at DI, during I/O sequence number 4 in Figure 62, to set CH1 as the positive input and CH0 as the negative input for the different versions of ADCs:

Part	DI Data(1)							
Number	DI0	DI1	DI2	DI3	DI4	DI5	DI6	DI7
ADC12H030ADC12030	L	H	L	L	H	L	X	X
ADC12H032ADC12032	L	H	L	L	H	L	X	X
ADC12H034ADC12034	L	H	L	L	L	H	L	X
ADC12H038ADC12038	L	H	L	L	L	L	H	L

(1) X can be a logic high (H) or low (L).

1.5 Power Up/Down

The ADC may be powered down by taking the PD pin HIGH or by the instruction input at DI (see Table 5 and Table 6, and the Power Up/Down timing diagrams). When the ADC is powered down in this way, the ADC conversion circuitry is deactivated but the digital I/O circuitry is kept active.

Copyright © 1999–2013, Texas Instruments Incorporated

Hardware power up/down is controlled by the state of the PD pin. Software power-up/down is controlled by the instruction issued to the ADC. If a software power up instruction is issued to the ADC while a hardware power down is in effect (PD pin high) the device will remain in the power-down state. If a software power down instruction is issued to the ADC while a hardware power up is in effect (PD pin low), the device will power down. When the device is powered down by software, it may be powered up by either issuing a software power up instruction or by taking PD pin high and then low. If the power down command is issued during a conversion, that conversion is interrupted, so the data output after power up cannot be relied upon.

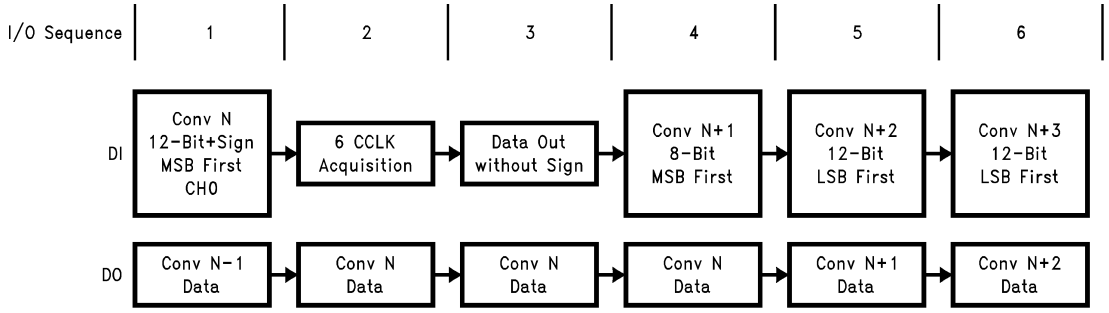

Figure 62. Changing the ADC's Conversion Configuration

1.6 User Mode and Test Mode

An instruction may be issued to the ADC to put it into test mode, which is used by the manufacturer to verify complete functionality of the device. During test mode CH0–CH7 become active outputs. If the device is inadvertently put into the test mode with $\overline{CS}$ continuously low, the serial communications may be desynchronized. Synchronization may be regained by cycling the power supply voltage to the device. Cycling the power supply voltage will also set the device into user mode. If $\overline{CS}$ is used in the serial interface, the ADC may be queried to see what mode it is in. This is done by issuing a "read STATUS register" instruction to the ADC. When bit 9 of the status register is high, the ADC is in test mode; when bit 9 is low the ADC, is in user mode. As an alternative to cycling the power supply, an instruction sequence may be used to return the device to user mode. This instruction sequence must be issued to the ADC using $\overline{CS}$. The following table lists the instructions required to return the device to user mode. Note that this **entire sequence**, including both Test Mode and User Mode values, should be sent to recover from the test mode.

Instruction	DI Data(1)							
	DI0	DI1	DI2	DI3	DI4	DI5	DI6	D17
TEST MODE	H	X	X	X	H	H	H	H
Reset Test Mode Instructions	L	L	L	L	H	H	H	L
	L	L	L	L	H	L	H	L
	L	L	L	L	H	L	H	H
USER MODE	L	L	L	L	H	H	H	H
Power Up	L	L	L	L	H	L	H	L
Set DO with or without Sign	H or L	L	L	L	H	H	L	H
Set Acquisition Time	H or L	H or L	L	L	H	H	H	L
Start a Conversion	H or L	H or L	H or L	H or L	L	H or L	H or L	H or L

(1) X = Don't Care

The power up, data with or without sign, and acquisition time instructions should be resent after returning to the user mode. This is to ensure that the ADC is in the required state before a conversion is started.

1.7 Reading the Data Without Starting a Conversion

The data from a particular conversion may be accessed without starting a new conversion by ensuring that the $\overline{CONV}$ line is taken high during the I/O sequence. See Figure 49 and Figure 50. Table 6 describes the operation of the $\overline{CONV}$ pin. It is not necessary to read the data as soon as $\overline{DOR}$ goes low. The data will remain in the output register *if* $\overline{CS}$ is brought high right after $\overline{DOR}$ goes high. A single conversion may be read as many times as desired before $\overline{CS}$ is brought low.

Copyright © 1999–2013, Texas Instruments Incorporated

1.8 Brown Out Conditions

When the supply voltage dips below about 2.7V, the internal registers, including the calibration coefficients and all of the other registers, may lose their contents. When this happens the ADC will not perform as expected or not at all after power is fully restored. While writing the desired information to all registers and performing a calibration *might sometimes* cause recovery to full operation, the only sure recovery method is to reduce the supply voltage to below 0.5V, then reprogram the ADC and perform a calibration after power is fully restored.

2.0 THE ANALOG MULTIPLEXER

For the ADC12038, the analog input multiplexer can be configured with 4 differential channels or 8 single ended channels with the COM input as the zero reference or any combination thereof (see Figure 63). The difference between the voltages at the V_{REF}^+ and V_{REF}^- pins determines the input voltage span (V_{REF}). The analog input voltage range is 0 to V_A^+. Negative digital output codes result when $V_{IN}^- > V_{IN}^+$. The actual voltage at V_{IN}^- or V_{IN}^+ cannot go below AGND.



Figure 63. Input Multiplexer Options



A/DIN1 and A/DIN2 can be assigned as the + or − input

A/DIN1 is + input
A/DIN2 is − input

Figure 64. MUXOUT connections for multiplexer option

CH0, CH2, CH4, and CH6 can be assigned to the MUXOUT1 pin in the differential configuration, while CH1, CH3, CH5, and CH7 can be assigned to the MUXOUT2 pin. In the differential configuration, the analog inputs are paired as follows: CH0 with CH1, CH2 with CH3, CH4 with CH5 and CH6 with CH7. The A/DIN1 and A/DIN2 pins can be assigned positive or negative polarity.

With the single-ended multiplexer configuration, CH0 through CH7 can be assigned to the MUXOUT1 pin. The COM pin is always assigned to the MUXOUT2 pin. A/DIN1 is assigned as the positive input; A/DIN2 is assigned as the negative input. (See Figure 64).

The Multiplexer assignment tables for these ADCs (Table 2,Table 3, andTable 4) summarize the aforementioned functions for the different versions of ADCs.

Copyright © 1999–2013, Texas Instruments Incorporated

2.1 Biasing for Various Multiplexer Configurations

Figure 65 is an example of device connections for single-ended operation. The sign bit is always low. The digital output range is 0 0000 0000 0000 to 0 1111 1111 1111. One LSB is equal to 1 mV (4.1V/4096 LSBs).

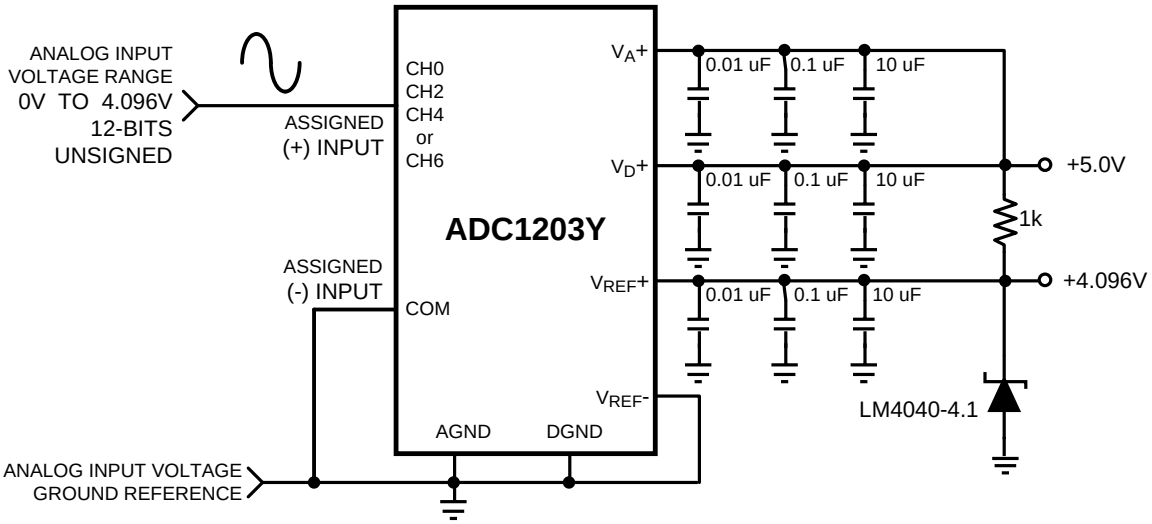

Figure 65. Single-Ended Biasing

For pseudo-differential signed operation, the circuit of Figure 66 shows a signal AC coupled to the ADC. This gives a digital output range of −4096 to +4095. With a 2.5V reference, 1 LSB is equal to 610 µV. Although the ADC is not production tested with a 2.5V reference, when V_A^+ and V_D^+ are +5.0V, linearity error typically will not change more than 0.1 LSB (see the curves in the Typical Electrical Characteristics Section). With the ADC set to an acquisition time of 10 clock periods, the input biasing resistor needs to be 600Ω or less. Notice though that the input coupling capacitor needs to be made fairly large to bring down the high pass corner. Increasing the acquisition time to 34 clock periods (with a 5 MHz CCLK frequency) would allow the 600Ω to increase to 6k, which with a 1 µF coupling capacitor would set the high pass corner at 26 Hz. Increasing R, to 6k would allow R_2 to be 2k.

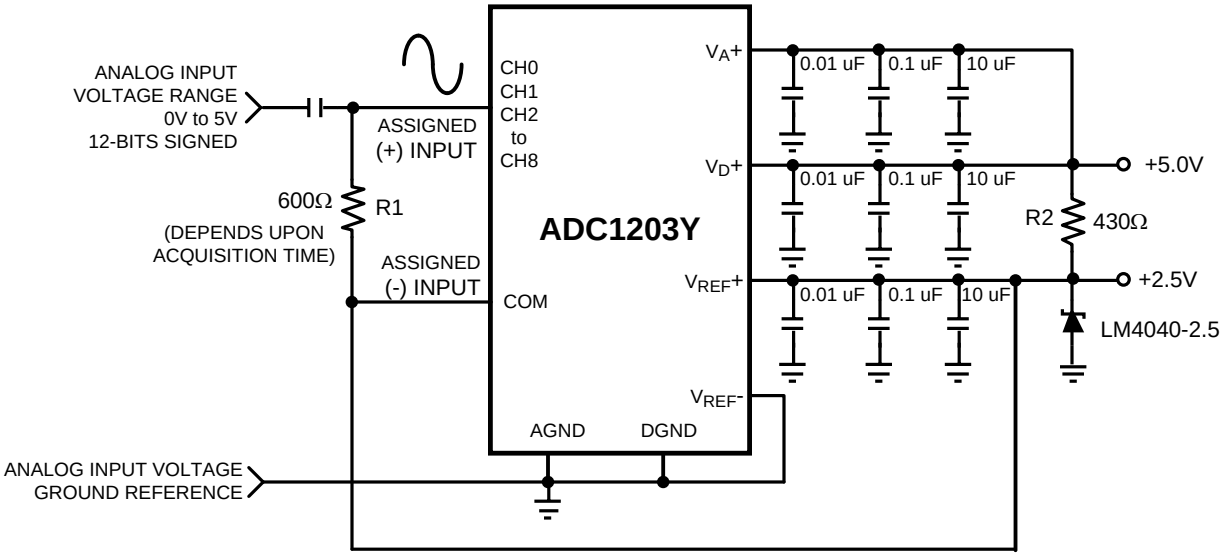

Figure 66. Pseudo-Differential Biasing with the Signal Source AC Coupled Directly into the ADC

An alternative method for biasing pseudo-differential operation is to use the +2.5V from the LM4040 to bias any amplifier circuits driving the ADC as shown in Figure 67. The value of the resistor pull-up biasing the LM4040-2.5 will depend upon the current required by the op amp biasing circuitry.

Copyright © 1999–2013, Texas Instruments Incorporated

In the circuit of Figure 67, some voltage range is lost since the amplifier will not be able to swing to +5V and GND with a single +5V supply. Using an adjustable version of the LM4041 to set the full scale voltage at exactly 2.048V and a lower grade LM4040D-2.5 to bias up everything to 2.5V as shown in Figure 68 will allow the use of all the ADC's digital output range of −4096 to +4095 while leaving plenty of head room for the amplifier.

Fully differential operation is shown in Figure 69. One LSB for this case is equal to (4.1V/4096) = 1 mV.

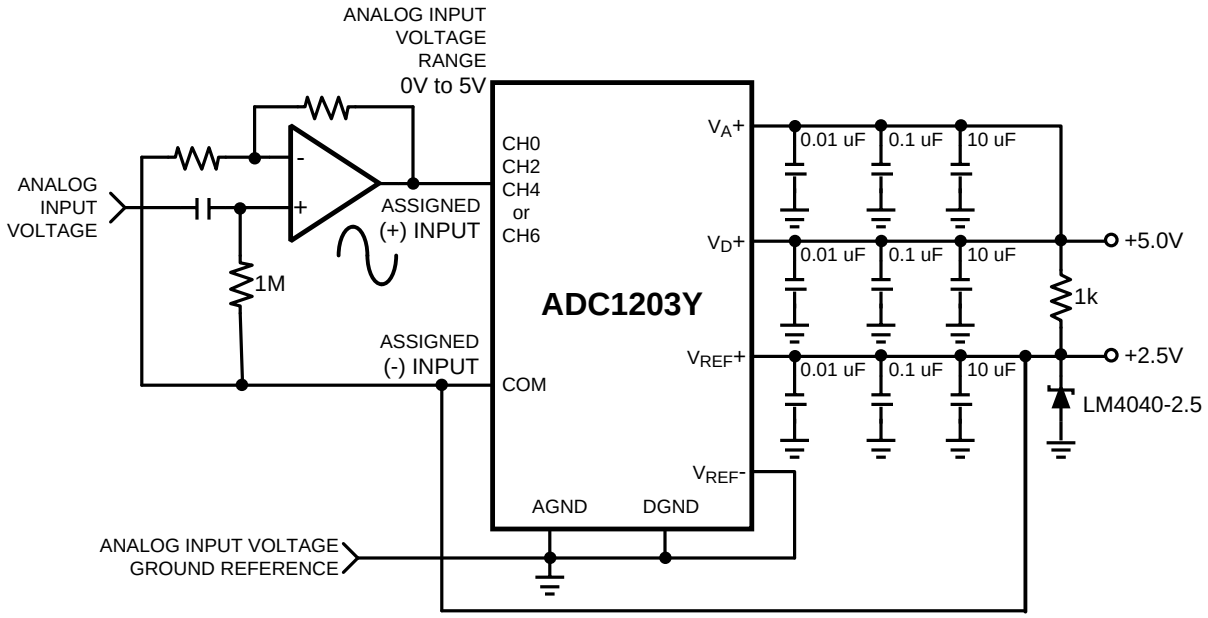

Figure 67. Alternative Pseudo-Differential Biasing

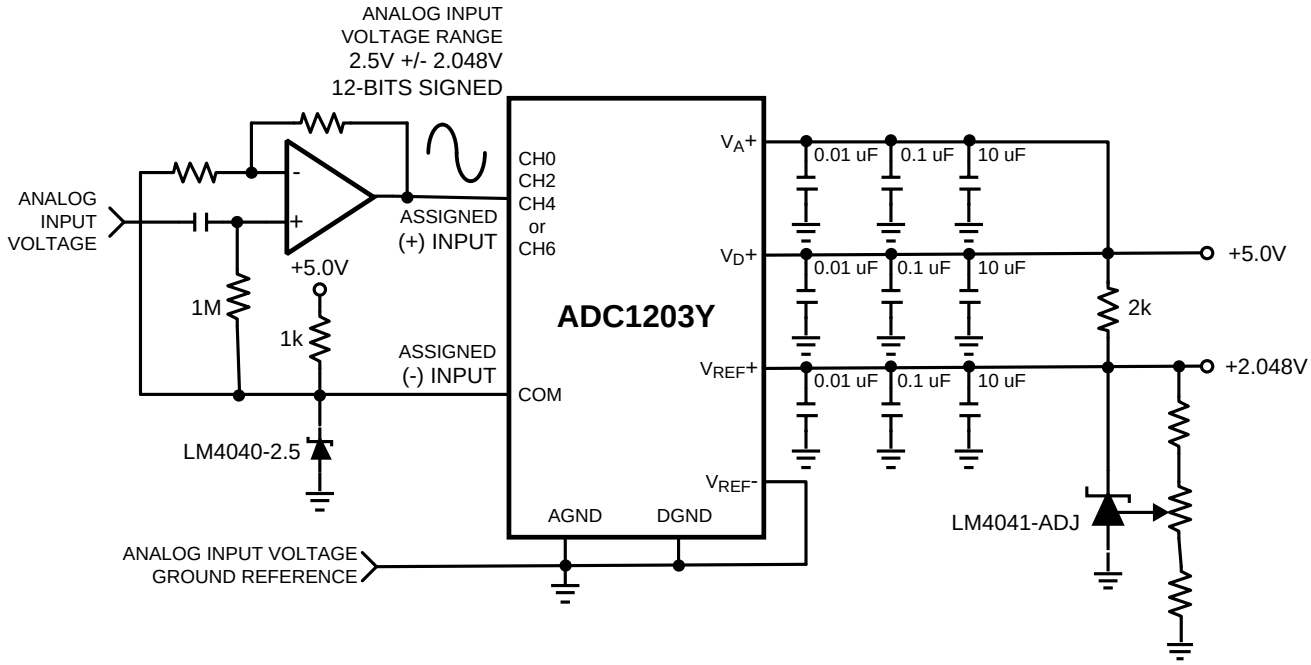

Figure 68. Pseudo-Differential Biasing without the Loss of Digital Output Range

Copyright © 1999–2013, Texas Instruments Incorporated

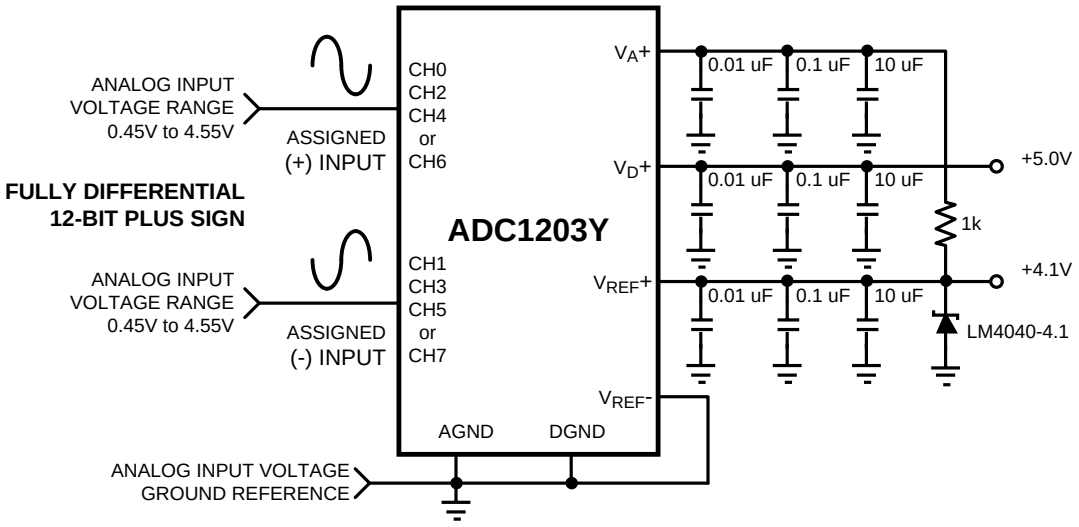

Figure 69. Fully Differential Biasing

3.0 REFERENCE VOLTAGE

The difference in the voltages applied to the V_{REF}^+ and V_{REF}^- defines the analog input span (the difference between the voltage applied between two multiplexer inputs or the voltage applied to one of the multiplexer inputs and analog ground) over which 4095 positive and 4096 negative codes exist. The voltage sources driving V_{REF}^+ and V_{REF}^- must have very low output impedance and noise. The circuit in Figure 70 is an example of a very stable reference appropriate for use with the device.

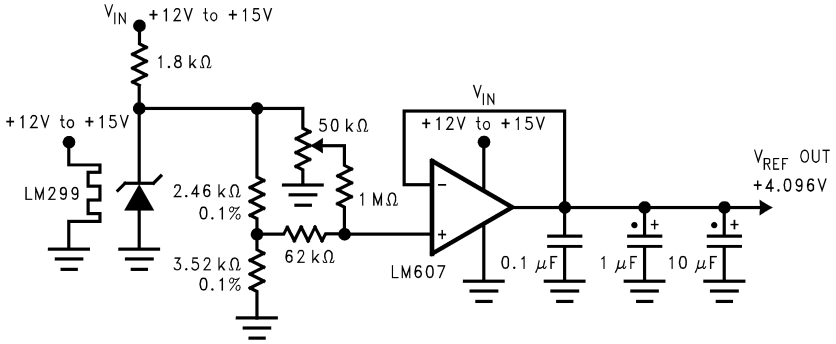

*Tantalum

Figure 70. Low Drift Extremely Stable Reference Circuit

The ADC12030/2/4/8 can be used in either ratiometric or absolute reference applications. In ratiometric systems, the analog input voltage is proportional to the voltage used for the ADC's reference voltage. When this voltage is the system power supply, the V_{REF}^+ pin is connected to V_A^+ and V_{REF}^- is connected to ground. This technique relaxes the system reference stability requirements because the analog input voltage and the ADC reference voltage move together. This maintains the same output code for given input conditions. For absolute accuracy, where the analog input voltage varies between very specific voltage limits, a time and temperature stable voltage source can be connected to the reference inputs. Typically, the reference voltage magnitude will require an initial adjustment to null reference voltage induced full-scale errors.

Below are recommended references along with some key specifications.

Copyright © 1999–2013, Texas Instruments Incorporated

Part Number	Output Voltage Tolerance	Temperature Coefficient
LM4041CI-Adj	±0.5%	±100ppm/°C
LM4040AI-4.1	±0.1%	±100ppm/°C
LM4120AI-4.1	±0.2%	±50ppm/°C
LM4121AI-4.1	±0.2%	±50ppm/°C
LM4050AI-4.1	±0.1%	±50ppm/°C
LM4030AI-4.1	±0.05%	±10ppm/°C
LM4140AC-4.1	±0.1%	±3.0ppm/°C
Circuit of Figure 70	Adjustable	±2ppm/°C

The reference voltage inputs are not fully differential. The ADC12030/2/4/8 will not generate correct conversions or comparisons if V_{REF}^+ is taken below V_{REF}^-. Correct conversions result when V_{REF}^+ and V_{REF}^- differ by 1V or more and remain at all times between ground and V_A^+. The V_{REF} common mode range, $(V_{REF}^+ + V_{REF}^-)/2$, is restricted to $(0.1 \times V_A^+)$ to $(0.6 \times V_A^+)$. Therefore, with $V_A^+ = 5V$ the center of the reference ladder should not go below 0.5V or above 3.0V. Figure 71 is a graphic representation of the voltage restrictions on V_{REF}^+ and V_{REF}^-.

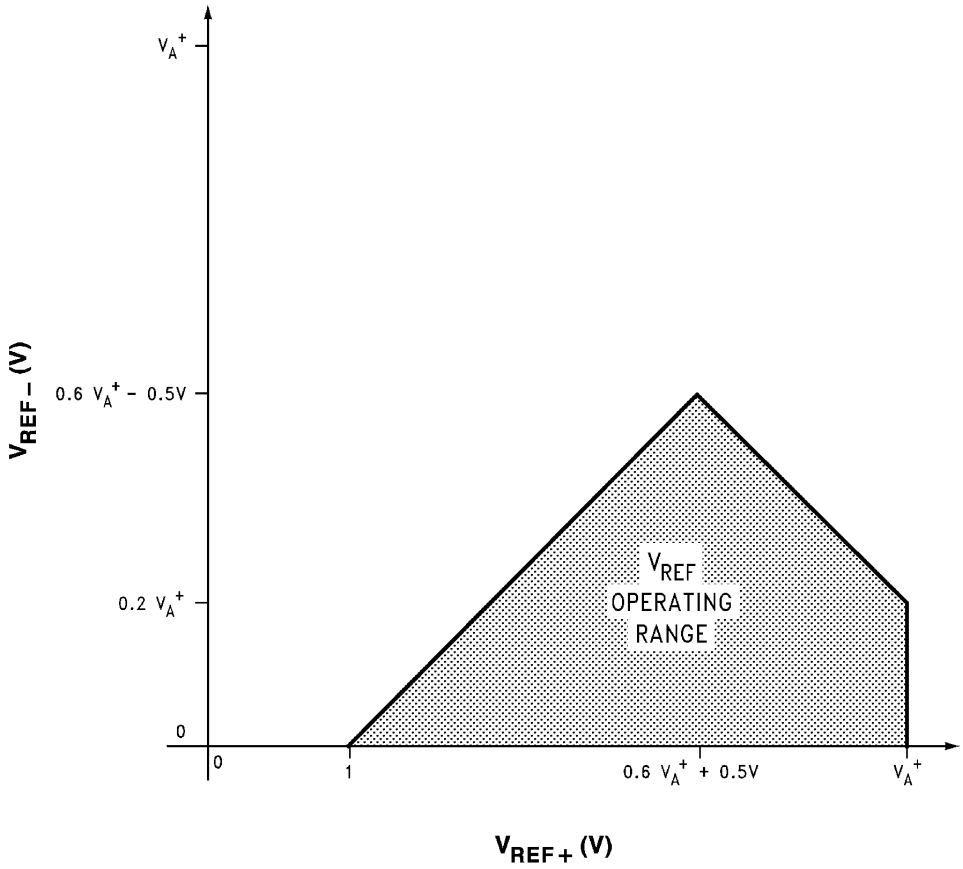

Figure 71. V_{REF} Operating Range

4.0 ANALOG INPUT VOLTAGE RANGE

The ADC12030/2/4/8's fully differential ADC generate a two's complement output that is found by using the equations shown below:

for (12-bit) resolution the Output Code =

$$\frac{(V_{IN}^+ - V_{IN}^-)\,(4096)}{(V_{REF}^+ - V_{REF}^-)} \quad (1)$$

Copyright © 1999–2013, Texas Instruments Incorporated

for (8-bit) resolution the Output Code =

$$\frac{(V_{IN}^{+} - V_{IN}^{-})\,(256)}{(V_{REF}^{+} - V_{REF}^{-})} \quad (2)$$

Round off to the nearest integer value between −4096 to 4095 for 12-bit resolution and between −256 to 255 for 8-bit resolution if the result of the above equation is not a whole number.

Examples are shown in the table below:

V_{REF}^{+}	V_{REF}^{-}	V_{IN}^{+}	V_{IN}^{-}	Digital Output Code
+2.5V	+1V	+1.5V	0V	0,1111,1111,1111
+4.096V	0V	+3V	0V	0,1011,1011,1000
+4.096V	0V	+2.499V	+2.500V	1,1111,1111,1111
+4.096V	0V	0V	+4.096V	1,0000,0000,0000

5.0 INPUT CURRENT

At the start of the acquisition window (t_A) a charging current flows into or out of the analog input pins (A/DIN1 and A/DIN2) depending upon the input voltage polarity. The analog input pins are CH0–CH7 and COM when A/DIN1 is tied to MUXOUT1 and A/DIN2 is tied to MUXOUT2. The peak value of this input current will depend upon the actual input voltage applied, the source impedance and the internal multiplexer switch on resistance. With MUXOUT1 tied to A/DIN1 and MUXOUT2 tied to A/DIN2 the internal multiplexer switch on resistance is typically 1.6 kΩ. The A/DIN1 and A/DIN2 mux on resistance is typically 750Ω.

6.0 INPUT SOURCE RESISTANCE

For low impedance voltage sources (<600Ω), the input charging current will decay before the end of the S/H's acquisition time of 2 µs (10 CCLK periods with f_C = 5 MHz), to a value that will not introduce any conversion errors. For high source impedances, the S/H's acquisition time can be increased to 18 or 34 CCLK periods. For less ADC resolution and/or slower CCLK frequencies the S/H's acquisition time may be decreased to 6 CCLK periods. To determine the number of clock periods (N_c) required for the acquisition time with a specific source impedance for the various resolutions the following equations can be used:

12 Bit + Sign $N_C = [R_S + 2.3] \times f_C \times 0.824$

8 Bit + Sign $N_C = [R_S + 2.3] \times f_C \times 0.57$

where

- f_C is the conversion clock (CCLK) frequency in MHz
- R_S is the external source resistance in kΩ (3)

As an example, operating with a resolution of 12 Bits+sign, a 5 MHz clock frequency and maximum acquisition time of 34 conversion clock periods the ADC's analog inputs can handle a source impedance as high as 6 kΩ. The acquisition time may also be extended to compensate for the settling or response time of external circuitry connected between the MUXOUT and A/DIN pins.

An acquisition starts at a falling edge of SCLK and ends at a rising edge of CCLK (see timing diagrams). If SCLK and CCLK are asynchronous, one extra CCLK clock period may be inserted into the programmed acquisition time for synchronization. Therefore, with asynchronous SCLK and CCLKs the acquisition time will change from conversion to conversion.

7.0 INPUT BYPASS CAPACITANCE

External capacitors (0.01 µF–0.1 µF) can be connected between the analog input pins, CH0–CH7, and analog ground to filter any noise caused by inductive pickup associated with long input leads. These capacitors will not degrade the conversion accuracy.

8.0 NOISE

The leads to each of the analog multiplexer input pins should be kept as short as possible. This will minimize input noise and clock frequency coupling that can cause conversion errors. Input filtering can be used to reduce the effects of the noise sources.

Copyright © 1999–2013, Texas Instruments Incorporated

9.0 POWER SUPPLIES

Noise spikes on the V_A^+ and V_D^+ supply lines can cause conversion errors; the comparator will respond to the noise. The ADC is especially sensitive to any power supply spikes that occur during the Auto Zero or linearity correction. The minimum power supply bypassing capacitors recommended are low inductance tantalum capacitors of 10 µF or greater paralleled with 0.1 µF monolithic ceramic capacitors. More or different bypassing may be necessary depending upon the overall system requirements. Separate bypass capacitors should be used for the V_A^+ and V_D^+ supplies and placed as close as possible to these pins.

10.0 GROUNDING

The ADC12030/2/4/8's performance can be maximized through proper grounding techniques. These include the use of separate analog and digital areas of the board with analog and digital components and traces located only in their respective areas. Bypass capacitors of 0.01 µF and 0.1 µF surface mount capacitors and a 10 µF are recommended at each of the power supply pins for best performance. These capacitors should be located as close to the bypassed pin as practical, especially the smaller value capacitors.

11.0 CLOCK SIGNAL LINE ISOLATION

The ADC12030/2/4/8's performance is optimized by routing the analog input/output and reference signal conductors as far as possible from the conductors that carry the clock signals to the CCLK and SCLK pins. Maintaining a separation of at least 7 to 10 times the height of the clock trace above its reference plane is recommended.

12.0 THE CALIBRATION CYCLE

A calibration cycle needs to be started after the power supplies, reference, and clock have been given enough time to stabilize after initial turn-on. During the calibration cycle, correction values are determined for the offset voltage of the sampled data comparator and any linearity and gain errors. These values are stored in internal RAM and used during an analog-to-digital conversion to bring the overall full-scale, offset, and linearity errors down to the specified limits. Full-scale error typically changes ±0.4 LSB over temperature and linearity error changes even less; therefore it should be necessary to go through the calibration cycle only once after power up if the Power Supply Voltage and the ambient temperature do not change significantly (see the curves in Typical Performance Characteristics).

13.0 THE Auto Zero CYCLE

To correct for any change in the zero (offset) error of the ADC, the Auto Zero cycle can be used. It may be necessary to do an Auto Zero cycle whenever the ambient temperature or the power supply voltage change significantly. (See the curves, Figure 18 and Figure 20, in Typical Performance Characteristics.)

14.0 DYNAMIC PERFORMANCE

Many applications require the converter to digitize AC signals, but the standard DC integral and differential nonlinearity specifications will not accurately predict the ADC's performance with AC input signals. The important specifications for AC applications reflect the converter's ability to digitize AC signals without significant spectral errors and without adding noise to the digitized signal. Dynamic characteristics such as signal-to-noise (S/N), signal-to-noise + distortion ratio (S/(N + D)), effective bits, full power bandwidth, aperture time and aperture jitter are quantitative measures of the ADC's capability.

An ADC's AC performance can be measured using Fast Fourier Transform (FFT) methods. A sinusoidal waveform is applied to the ADC's input, and the transform is then performed on the digitized waveform. S/(N + D) and S/N are calculated from the resulting FFT data, and a spectral plot may also be obtained. Typical values for S/N are shown in Converter Electrical Characteristics, and spectral plots of S/(N + D) are included in Typical Performance Characteristics.

The ADC's noise and distortion levels will change with the frequency of the input signal, with more distortion and noise occurring at higher signal frequencies. This can be seen in the S/(N + D) versus frequency curves.

Effective number of bits can also be useful in describing the ADC's noise and distortion performance. An ideal ADC will have some amount of quantization noise, determined by its resolution, and no distortion, which will yield an optimum S/(N + D) ratio given by the following equation:

$$S/(N + D) = (6.02 \times n + 1.76)\ dB$$

Copyright © 1999–2013, Texas Instruments Incorporated

where

- "n" is the ADC's resolution in bits (4)

The effective bits of an actual ADC is found to be:

n(effective) = ENOB = (S/(N + D) - 1.76 / 6.02 (5)

As an example, this device with a differential signed 5V, 1 kHz sine wave input signal will typically have a S/(N + D) of 77 dB, which is equivalent to 12.5 effective bits.

15.0 AN RS232 SERIAL INTERFACE

Shown on the following page is a schematic for an RS232 interface to any IBM and compatible PCs. The DTR, RTS, and CTS RS232 signal lines are buffered via level translators and connected to the ADC12038's DI, SCLK, and DO pins, respectively. The D flip flop drives the $\overline{CS}$ control line.

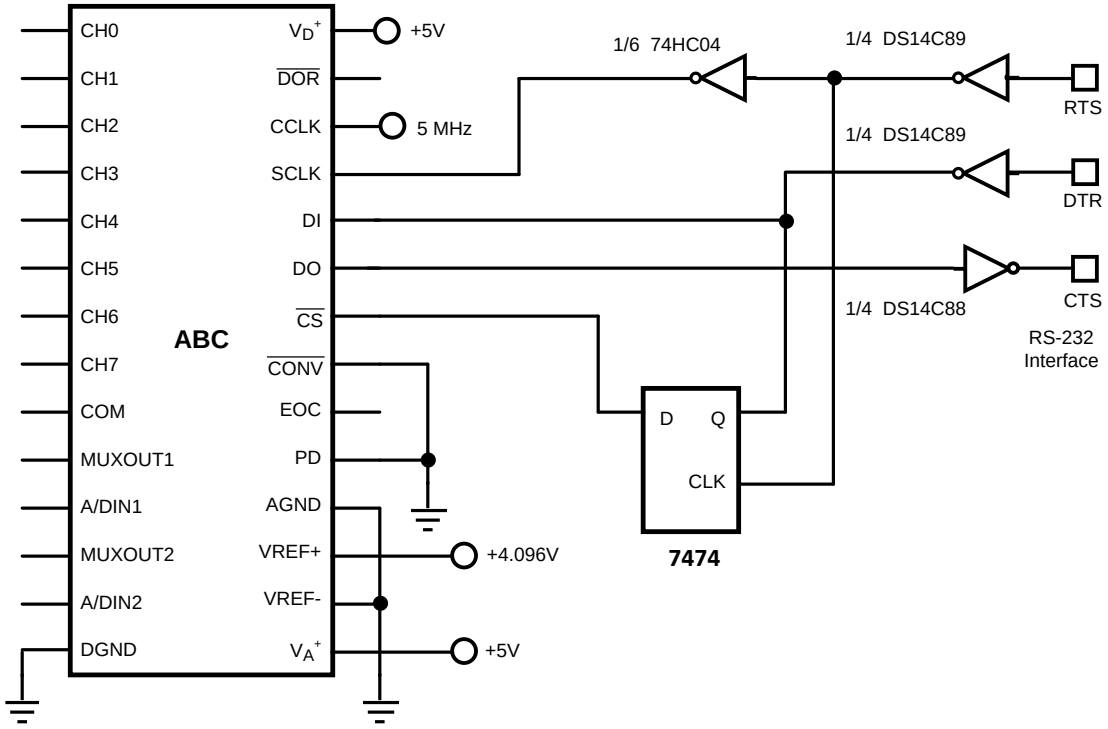

Note: V_A^+, V_D^+, and V_{REF}^+ on the ADC12038 each have 0.01 µF and 0.1 µF chip caps, and 10 µF tantalum caps. All logic devices are bypassed with 0.1 µF caps.

Figure 72. Schematic for an RS232 Interface to any IBM and Compatible PCs

The assignment of the RS-232 port is shown below

			B7	B6	B5	B4	B3	B2	B1	B0
COM1	Input Address	3FE	X	X	X	CTS	X	X	X	X
	Output Address	3FC	X	X	X	0	X	X	RTS	DTR

A sample program, written in Microsoft QuickBasic, is shown on the next page. The program prompts for data mode select instruction to be sent to the ADC. This can be found from the Mode Programming table shown earlier. The data should be entered in “1”s and “0”s as shown in the table with DI0 first. Next, the program prompts for the number of SCLK cycles required for the programmed mode select instruction. For instance, to send all “0”s to the ADC, selects CH0 as the +input, CH1 as the −input, 12-bit conversion, and 13-bit MSB first data output format (if the sign bit was not turned off by a previous instruction). This would require 13 SCLK periods since the output data format is 13 bits.

Copyright © 1999–2013, Texas Instruments Incorporated

The ADC powers up with No Auto Cal, No Auto Zero, 10 CCLK Acquisition Time, 12-bit conversion, data out with sign, power up, 12- or 13-bit MSB first, and user mode. Auto Cal, Auto Zero, Power Up and Power Down instructions do not change these default settings. The following power up sequence should be followed:

1. Run the program
2. Prior to responding to the prompt apply the power to the ADC12038
3. Respond to the program prompts

It is recommended that the first instruction issued to the ADC12038 be Auto Cal (see *Section* 1.1 Interface Concepts).

```
Code Listing:'variables  DOL=Data Out word length, DI=Data string for ADC DI input,
 '           DO=ADC result string
 'SET CS# HIGH
 OUT   &H3FC, (&H2 OR INP (&H3FC))       'set RTS HIGH
 OUT   &H3FC, (&HFE AND INP(&H3FC))      'set DTR LOW
 OUT   &H3FC, (&HFD AND INP(&H3FC))      'set RTS LOW
 OUT   &H3FC, (&HEF AND INP(&H3FC))      'set B4 low
 10
 LINE INPUT “DI data for ADC12038 (see Mode Table on data sheet)”; DI$
 INPUT “ADC12038 output word length (8,9,12,13,16 or 17)”; DOL
 20
 'SET CS# HIGH
 OUT   &H3FC, (&H2 OR INP (&H3FC))       'set RTS HIGH
 OUT   &H3FC, (&HFE AND INP(&H3FC))      'set DTR LOW
 OUT   &H3FC, (&HFD AND INP(&H3FC))      'set RTS LOW
 'SET CS# LOW
 OUT   &H3FC, (&H2 OR INP (&H3FC))       'set RTS HIGH
 OUT   &H3FC, (&H1 OR INP(&H3FC))        'set DTR HIGH
 OUT   &H3FC, (&HFD AND INP(&H3FC))      'set RTS LOW
 DO$=   “ ”                               'reset DO variable
   OUT &H3FC, (&H1 OR INP(&H3FC))        'SET DTR HIGH
   OUT &H3FC, (&HFD AND INP(&H3FC))      'SCLK low
 FOR N=1 TO 8
   Temp$=MID$(DI$,N,1)
   IF Temp$=“0” THEN
     OUT &H3FC,(&H1 OR INP(&H3FC))
   ELSE OUT &H3FC, (&HFE AND INP(&H3FC))
   END IF                                'out DI
   OUT &H3FC, (&H2 OR INP(&H3FC))        'SCLK high
   IF  (INP(&H3FE) AND 16)=16 THEN
     DO$=DO$+“0”
     ELSE
     DO$=DO$+“1”
   END IF                                'input DO
   OUT &H3FC, (&H1 OR INP(&H3FC))        'SET DTR HIGH
   OUT &H3FC, (&HFD AND INP(&H3FC))      'SCLK low
 NEXT N
 IF DOL>8 THEN
   FOR N=9 TO DOL
   OUT &H3FC, (&H1 OR INP(&H3FC))        'SET DTR HIGH
   OUT &H3FC, (&HFD AND INP(&H3FC))      'SCLK low
   OUT &H3FC, (&H2 OR INP(&H3FC))        'SCLK high
   IF (INP(&H3FE) AND &H10)=&H10 THEN
     DO$=DO$+“0”
   ELSE
     DO$=DO$+“1”
   END IF
   NEXT N
 END IF
 OUT   &H3FC, (&HFA AND INP(&H3FC))      'SCLK low and DI high
 FOR N=1 TO 500
 NEXT N
 PRINT DO$
 INPUT “Enter “C” to convert else “RETURN” to alter DI data”; s$
```


Copyright © 1999–2013, Texas Instruments Incorporated

```
IF s$=“C” OR s$=“c” THEN
  GOTO 20
ELSE
  GOTO 10
END IF
END
```

Copyright © 1999–2013, Texas Instruments Incorporated

REVISION HISTORY

Changes from Revision J (March 2013) to Revision K	Page
• Changed layout of National Data Sheet to TI format	42

Copyright © 1999–2013, Texas Instruments Incorporated

PACKAGING INFORMATION

Orderable Device	Status (1)	Package Type	Package Drawing	Pins	Package Qty	Eco Plan (2)	Lead/Ball Finish (6)	MSL Peak Temp (3)	Op Temp (°C)	Device Marking (4/5)	Samples
ADC12030CIWM/NOPB	ACTIVE	SOIC	DW	16	45	Green (RoHS & no Sb/Br)	CU SN	Level-3-260C-168 HR	-40 to 85	ADC12030 CIWM	Samples
ADC12030CIWMX/NOPB	ACTIVE	SOIC	DW	16	1000	Green (RoHS & no Sb/Br)	CU SN	Level-3-260C-168 HR	-40 to 85	ADC12030 CIWM	Samples
ADC12038CIWM	NRND	SOIC	DW	28	26	TBD	Call TI	Call TI	-40 to 85	ADC12038 CIWM	
ADC12038CIWM/NOPB	ACTIVE	SOIC	DW	28	26	Green (RoHS & no Sb/Br)	CU SN	Level-3-260C-168 HR	-40 to 85	ADC12038 CIWM	Samples
ADC12038CIWMX/NOPB	ACTIVE	SOIC	DW	28	1000	Green (RoHS & no Sb/Br)	CU SN	Level-3-260C-168 HR	-40 to 85	ADC12038 CIWM	Samples
ADC12H034CIMSA/NOPB	NRND	SSOP	DB	24	58	Green (RoHS & no Sb/Br)	CU SN	Level-3-260C-168 HR		ADC12H034 CIMSA	
ADC12H034CIMSAX/NOPB	NRND	SSOP	DB	24	2000	Green (RoHS & no Sb/Br)	CU SN	Level-3-260C-168 HR		ADC12H034 CIMSA	

(1) The marketing status values are defined as follows:
ACTIVE: Product device recommended for new designs.
LIFEBUY: TI has announced that the device will be discontinued, and a lifetime-buy period is in effect.
NRND: Not recommended for new designs. Device is in production to support existing customers, but TI does not recommend using this part in a new design.
PREVIEW: Device has been announced but is not in production. Samples may or may not be available.
OBSOLETE: TI has discontinued the production of the device.

(2) Eco Plan - The planned eco-friendly classification: Pb-Free (RoHS), Pb-Free (RoHS Exempt), or Green (RoHS & no Sb/Br) - please check http://www.ti.com/productcontent for the latest availability information and additional product content details.
TBD: The Pb-Free/Green conversion plan has not been defined.
Pb-Free (RoHS): TI's terms "Lead-Free" or "Pb-Free" mean semiconductor products that are compatible with the current RoHS requirements for all 6 substances, including the requirement that lead not exceed 0.1% by weight in homogeneous materials. Where designed to be soldered at high temperatures, TI Pb-Free products are suitable for use in specified lead-free processes.
Pb-Free (RoHS Exempt): This component has a RoHS exemption for either 1) lead-based flip-chip solder bumps used between the die and package, or 2) lead-based die adhesive used between the die and leadframe. The component is otherwise considered Pb-Free (RoHS compatible) as defined above.
Green (RoHS & no Sb/Br): TI defines "Green" to mean Pb-Free (RoHS compatible), and free of Bromine (Br) and Antimony (Sb) based flame retardants (Br or Sb do not exceed 0.1% by weight in homogeneous material)

(3) MSL, Peak Temp. - The Moisture Sensitivity Level rating according to the JEDEC industry standard classifications, and peak solder temperature.

(4) There may be additional marking, which relates to the logo, the lot trace code information, or the environmental category on the device.

(5) Multiple Device Markings will be inside parentheses. Only one Device Marking contained in parentheses and separated by a "~" will appear on a device. If a line is indented then it is a continuation of the previous line and the two combined represent the entire Device Marking for that device.

(6) Lead/Ball Finish - Orderable Devices may have multiple material finish options. Finish options are separated by a vertical ruled line. Lead/Ball Finish values may wrap to two lines if the finish value exceeds the maximum column width.

Important Information and Disclaimer: The information provided on this page represents TI's knowledge and belief as of the date that it is provided. TI bases its knowledge and belief on information provided by third parties, and makes no representation or warranty as to the accuracy of such information. Efforts are underway to better integrate information from third parties. TI has taken and continues to take reasonable steps to provide representative and accurate information but may not have conducted destructive testing or chemical analysis on incoming materials and chemicals. TI and TI suppliers consider certain information to be proprietary, and thus CAS numbers and other limited information may not be available for release.

In no event shall TI's liability arising out of such information exceed the total purchase price of the TI part(s) at issue in this document sold by TI to Customer on an annual basis.

TAPE AND REEL INFORMATION

REEL DIMENSIONS

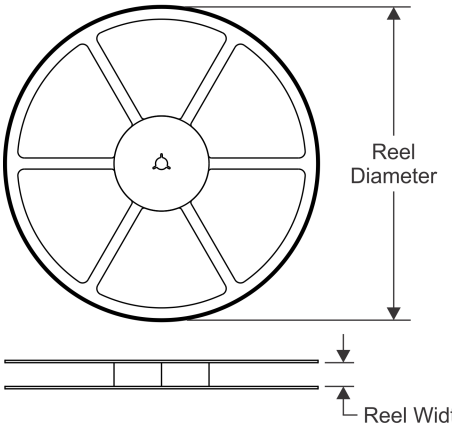

TAPE DIMENSIONS

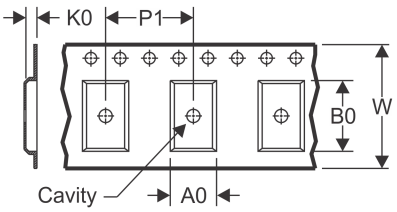

A0	Dimension designed to accommodate the component width
B0	Dimension designed to accommodate the component length
K0	Dimension designed to accommodate the component thickness
W	Overall width of the carrier tape
P1	Pitch between successive cavity centers

QUADRANT ASSIGNMENTS FOR PIN 1 ORIENTATION IN TAPE

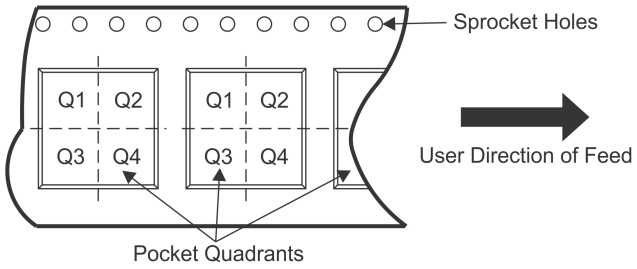

*All dimensions are nominal

Device	Package Type	Package Drawing	Pins	SPQ	Reel Diameter (mm)	Reel Width W1 (mm)	A0 (mm)	B0 (mm)	K0 (mm)	P1 (mm)	W (mm)	Pin1 Quadrant
ADC12030CIWMX/NOPB	SOIC	DW	16	1000	330.0	16.4	10.9	10.7	3.2	12.0	16.0	Q1
ADC12038CIWMX/NOPB	SOIC	DW	28	1000	330.0	24.4	10.8	18.4	3.2	12.0	24.0	Q1
ADC12H034CIMSAX/NOPB	SSOP	DB	24	2000	330.0	16.4	8.6	8.9	2.5	12.0	16.0	Q1

TAPE AND REEL BOX DIMENSIONS

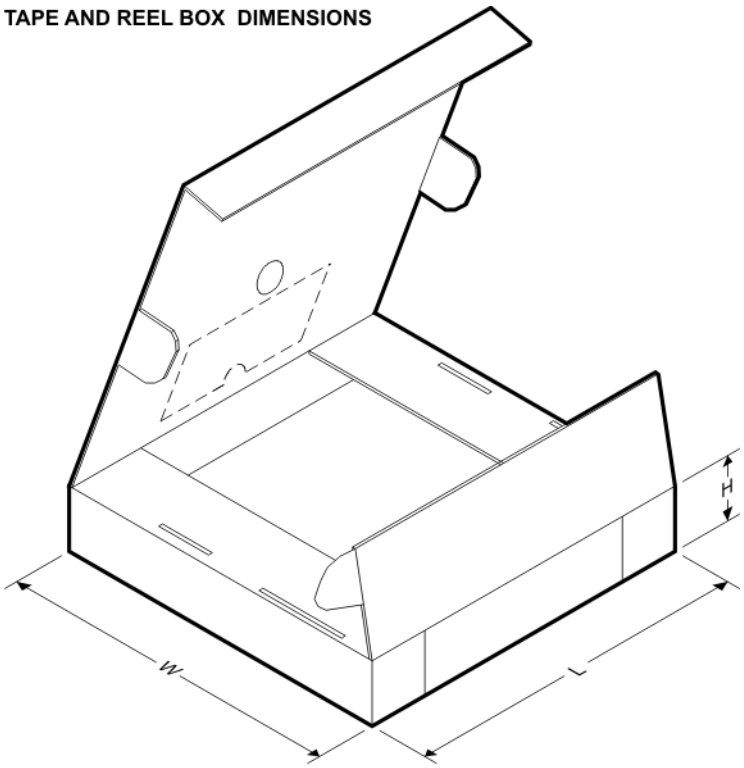

*All dimensions are nominal

Device	Package Type	Package Drawing	Pins	SPQ	Length (mm)	Width (mm)	Height (mm)
ADC12030CIWMX/NOPB	SOIC	DW	16	1000	367.0	367.0	38.0
ADC12038CIWMX/NOPB	SOIC	DW	28	1000	367.0	367.0	45.0
ADC12H034CIMSAX/NOPB	SSOP	DB	24	2000	367.0	367.0	38.0

DW (R–PDSO–G28) PLASTIC SMALL OUTLINE

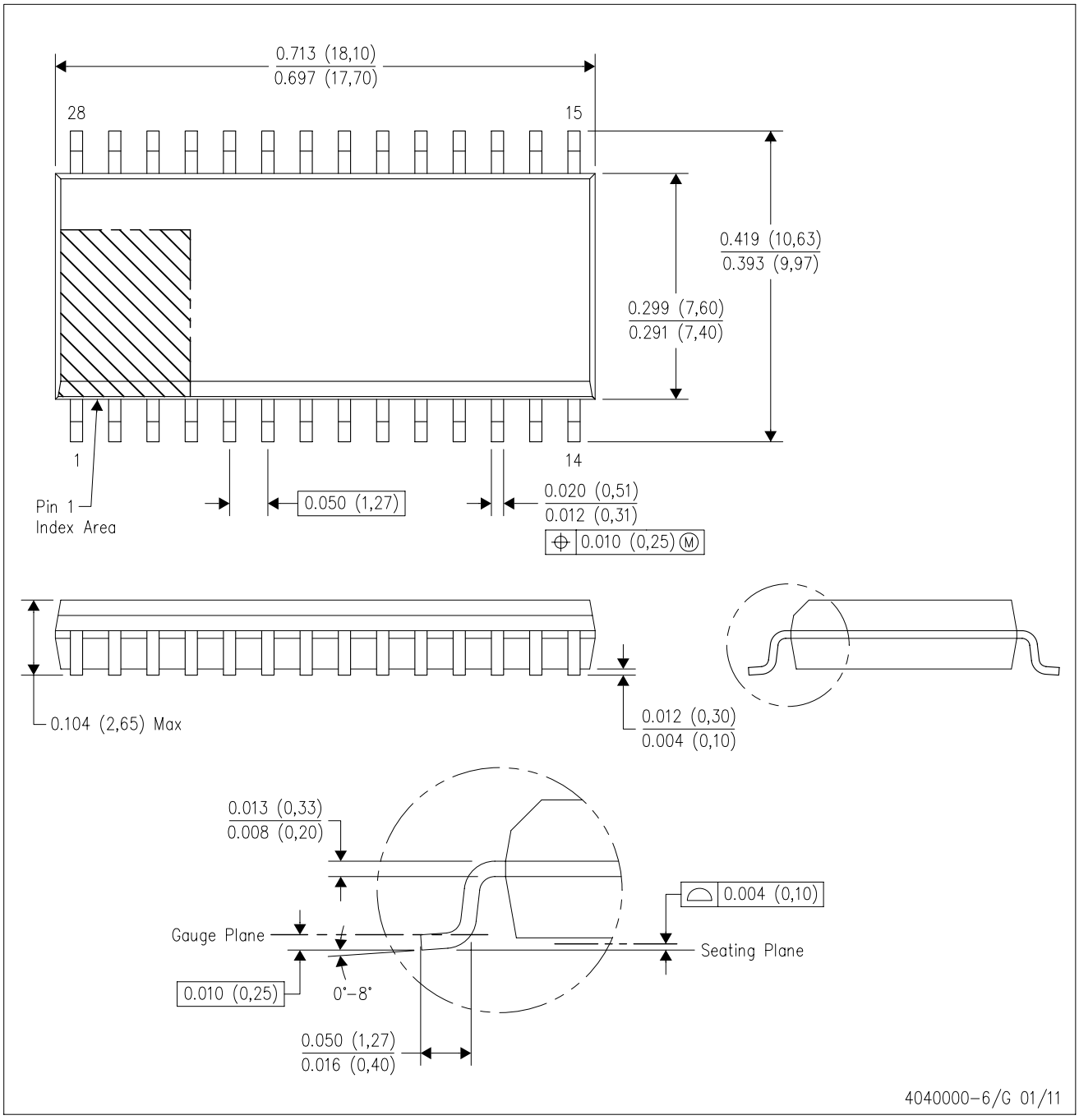

NOTES:
A. All linear dimensions are in inches (millimeters). Dimensioning and tolerancing per ASME Y14.5M–1994.
B. This drawing is subject to change without notice.
C. Body dimensions do not include mold flash or protrusion not to exceed 0.006 (0,15).
D. Falls within JEDEC MS–013 variation AE.

MSSO002E – JANUARY 1995 – REVISED DECEMBER 2001

DB (R-PDSO-G)** **PLASTIC SMALL-OUTLINE**

28 PINS SHOWN

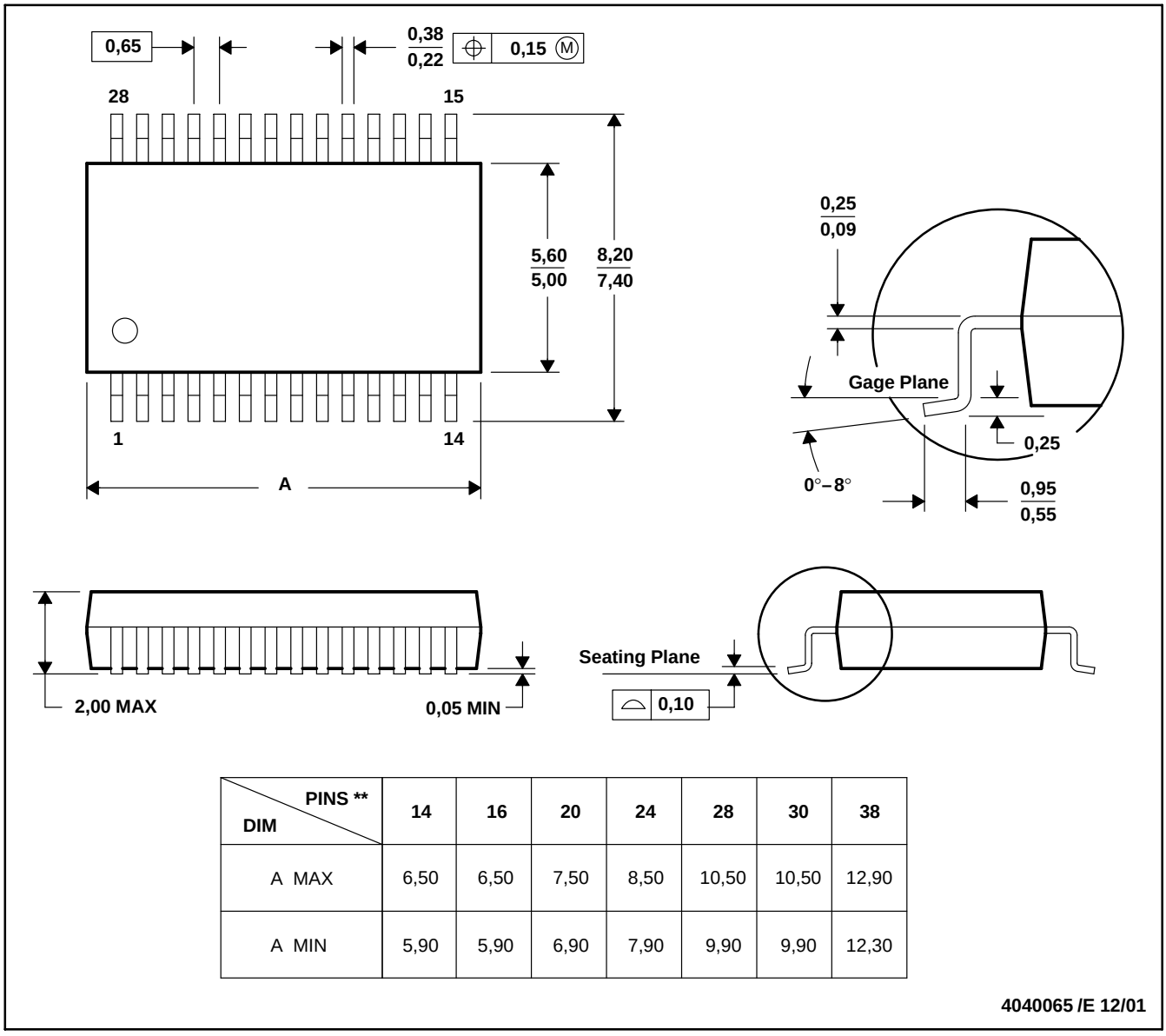

DIM \ PINS **	14	16	20	24	28	30	38
A MAX	6,50	6,50	7,50	8,50	10,50	10,50	12,90
A MIN	5,90	5,90	6,90	7,90	9,90	9,90	12,30

4040065 /E 12/01

NOTES: A. All linear dimensions are in millimeters.
B. This drawing is subject to change without notice.
C. Body dimensions do not include mold flash or protrusion not to exceed 0,15.
D. Falls within JEDEC MO-150

DW (R–PDSO–G16) PLASTIC SMALL OUTLINE

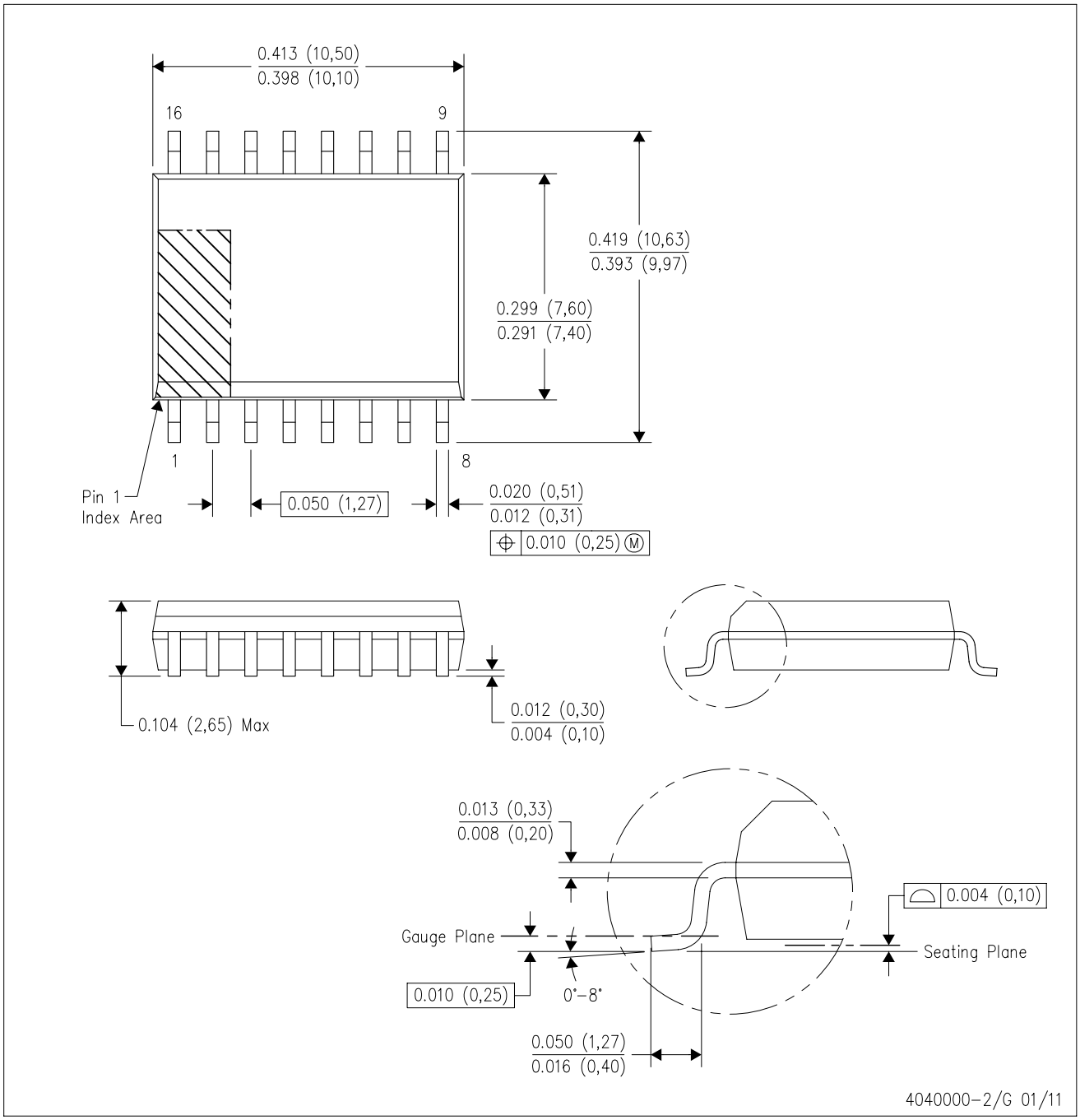

NOTES:
A. All linear dimensions are in inches (millimeters). Dimensioning and tolerancing per ASME Y14.5M–1994.
B. This drawing is subject to change without notice.
C. Body dimensions do not include mold flash or protrusion not to exceed 0.006 (0,15).
D. Falls within JEDEC MS–013 variation AA.

IMPORTANT NOTICE

Texas Instruments Incorporated and its subsidiaries (TI) reserve the right to make corrections, enhancements, improvements and other changes to its semiconductor products and services per JESD46, latest issue, and to discontinue any product or service per JESD48, latest issue. Buyers should obtain the latest relevant information before placing orders and should verify that such information is current and complete. All semiconductor products (also referred to herein as “components”) are sold subject to TI’s terms and conditions of sale supplied at the time of order acknowledgment.

TI warrants performance of its components to the specifications applicable at the time of sale, in accordance with the warranty in TI’s terms and conditions of sale of semiconductor products. Testing and other quality control techniques are used to the extent TI deems necessary to support this warranty. Except where mandated by applicable law, testing of all parameters of each component is not necessarily performed.

TI assumes no liability for applications assistance or the design of Buyers’ products. Buyers are responsible for their products and applications using TI components. To minimize the risks associated with Buyers’ products and applications, Buyers should provide adequate design and operating safeguards.

TI does not warrant or represent that any license, either express or implied, is granted under any patent right, copyright, mask work right, or other intellectual property right relating to any combination, machine, or process in which TI components or services are used. Information published by TI regarding third-party products or services does not constitute a license to use such products or services or a warranty or endorsement thereof. Use of such information may require a license from a third party under the patents or other intellectual property of the third party, or a license from TI under the patents or other intellectual property of TI.

Reproduction of significant portions of TI information in TI data books or data sheets is permissible only if reproduction is without alteration and is accompanied by all associated warranties, conditions, limitations, and notices. TI is not responsible or liable for such altered documentation. Information of third parties may be subject to additional restrictions.

Resale of TI components or services with statements different from or beyond the parameters stated by TI for that component or service voids all express and any implied warranties for the associated TI component or service and is an unfair and deceptive business practice. TI is not responsible or liable for any such statements.

Buyer acknowledges and agrees that it is solely responsible for compliance with all legal, regulatory and safety-related requirements concerning its products, and any use of TI components in its applications, notwithstanding any applications-related information or support that may be provided by TI. Buyer represents and agrees that it has all the necessary expertise to create and implement safeguards which anticipate dangerous consequences of failures, monitor failures and their consequences, lessen the likelihood of failures that might cause harm and take appropriate remedial actions. Buyer will fully indemnify TI and its representatives against any damages arising out of the use of any TI components in safety-critical applications.

In some cases, TI components may be promoted specifically to facilitate safety-related applications. With such components, TI’s goal is to help enable customers to design and create their own end-product solutions that meet applicable functional safety standards and requirements. Nonetheless, such components are subject to these terms.

No TI components are authorized for use in FDA Class III (or similar life-critical medical equipment) unless authorized officers of the parties have executed a special agreement specifically governing such use.

Only those TI components which TI has specifically designated as military grade or “enhanced plastic” are designed and intended for use in military/aerospace applications or environments. Buyer acknowledges and agrees that any military or aerospace use of TI components which have ***not*** been so designated is solely at the Buyer's risk, and that Buyer is solely responsible for compliance with all legal and regulatory requirements in connection with such use.

TI has specifically designated certain components as meeting ISO/TS16949 requirements, mainly for automotive use. In any case of use of non-designated products, TI will not be responsible for any failure to meet ISO/TS16949.

Products		**Applications**	
Audio	www.ti.com/audio	Automotive and Transportation	www.ti.com/automotive
Amplifiers	amplifier.ti.com	Communications and Telecom	www.ti.com/communications
Data Converters	dataconverter.ti.com	Computers and Peripherals	www.ti.com/computers
DLP® Products	www.dlp.com	Consumer Electronics	www.ti.com/consumer-apps
DSP	dsp.ti.com	Energy and Lighting	www.ti.com/energy
Clocks and Timers	www.ti.com/clocks	Industrial	www.ti.com/industrial
Interface	interface.ti.com	Medical	www.ti.com/medical
Logic	logic.ti.com	Security	www.ti.com/security
Power Mgmt	power.ti.com	Space, Avionics and Defense	www.ti.com/space-avionics-defense
Microcontrollers	microcontroller.ti.com	Video and Imaging	www.ti.com/video
RFID	www.ti-rfid.com		
OMAP Applications Processors	www.ti.com/omap	**TI E2E Community**	e2e.ti.com
Wireless Connectivity	www.ti.com/wirelessconnectivity		

Mailing Address: Texas Instruments, Post Office Box 655303, Dallas, Texas 75265
Copyright © 2015, Texas Instruments Incorporated