ADC084S101 4 Channel, 500 ksps to 1 Msps, 8-Bit A/D Converter

Check for Samples: ADC084S101

FEATURES

- **Specified Over a Range of Sample Rates**
- **Four Input Channels**
- **Variable Power Management**
- **Single Power Supply with 2.7V - 5.25V Range**

KEY SPECIFICATIONS

- **DNL: ±0.10 LSB (Typ)**
- **INL: ± 0.13 LSB (Typ)**
- **SNR: 49.6 dB (Typ)**
- **Power Consumption:**
  - **3V Supply: 3.2 mW (Typ)**
  - **5V Supply: 9.6 mW (Typ)**

APPLICATIONS

- **Portable Systems**
- **Remote Data Acquisition**
- **Instrumentation and Control Systems**

DESCRIPTION

The ADC084S101 is a low-power, four-channel CMOS 8-bit analog-to-digital converter with a high-speed serial interface. Unlike the conventional practice of specifying performance at a single sample rate only, the ADC084S101 is fully specified over a sample rate range of 500 ksps to 1 Msps. The converter is based on a successive-approximation register architecture with an internal track-and-hold circuit. It can be configured to accept up to four input signals at inputs IN1 through IN4.

The output serial data is straight binary, and is compatible with several standards, such as SPI™, QSPI™, MICROWIRE and many common DSP serial interfaces.

The ADC084S101 operates with a single supply, that can range from +2.7V to +5.25V. Normal power consumption using a +3V or +5V supply is 3.2 mW and 9.6 mW, respectively. The power-down feature reduces the power consumption to just 0.12 µW using a +3V supply, or 0.35 µW using a +5V supply.

The ADC084S101 is packaged in a 10-lead VSSOP package. Operation over the industrial temperature range of −40°C to +85°C is ensured.

Table 1. Pin-Compatible Alternatives by Resolution and Speed(1)

Resolution	Specified for Sample Rate Range of:		
	50 to 200 ksps	200 to 500 ksps	500 ksps to 1 Msps
12-bit	ADC124S021	ADC124S051	ADC124S101
10-bit	ADC104S021	ADC104S051	ADC104S101
8-bit	ADC084S021	ADC084S051	**ADC084S101**

(1) All devices are fully pin and function compatible.

Connection Diagram

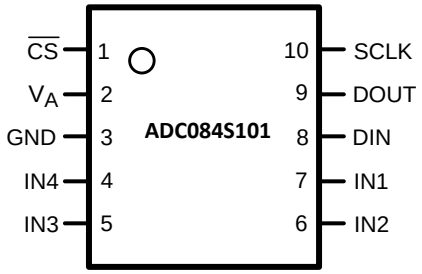

Figure 1. 10-Lead VSSOP
See DGS Package

Please be aware that an important notice concerning availability, standard warranty, and use in critical applications of Texas Instruments semiconductor products and disclaimers thereto appears at the end of this data sheet.

All trademarks are the property of their respective owners.

PRODUCTION DATA information is current as of publication date. Products conform to specifications per the terms of the Texas Instruments standard warranty. Production processing does not necessarily include testing of all parameters.

Copyright © 2005–2013, Texas Instruments Incorporated

Block Diagram

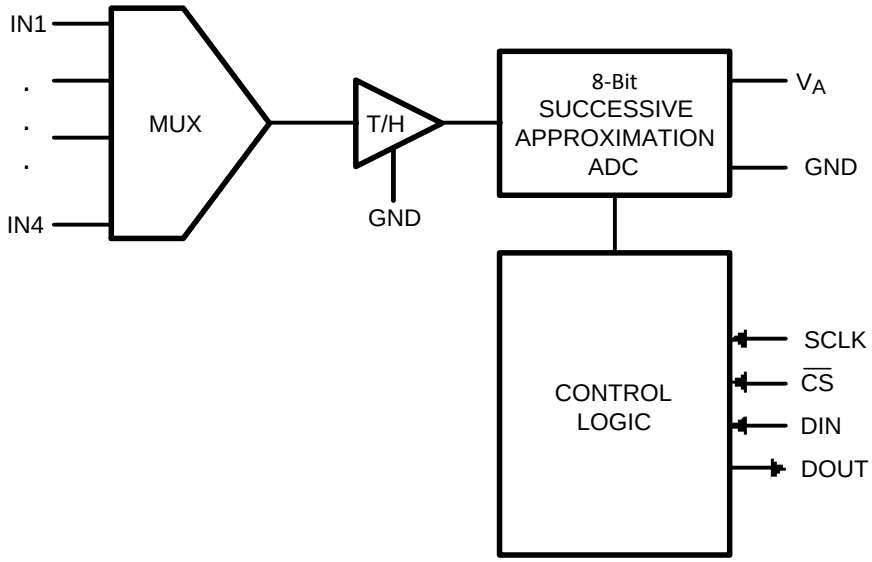

PIN DESCRIPTIONS and EQUIVALENT CIRCUITS

Pin No.	Symbol	Description
ANALOG I/O		
4-7	IN1 to IN4	Analog inputs. These signals can range from 0V to V_A.
DIGITAL I/O		
10	SCLK	Digital clock input. This clock directly controls the conversion and readout processes.
9	DOUT	Digital data output. The output samples are clocked out of this pin on falling edges of the SCLK pin.
8	DIN	Digital data input. The ADC084S101's Control Register is loaded through this pin on rising edges of the SCLK pin.
1	$\overline{CS}$	Chip select. On the falling edge of $\overline{CS}$, a conversion process begins. Conversions continue as long as $\overline{CS}$ is held low.
POWER SUPPLY		
2	V_A	Positive supply pin. This pin should be connected to a quiet +2.7V to +5.25V source and bypassed to GND with a 1 µF capacitor and a 0.1 µF monolithic capacitor located within 1 cm of the power pin.
3	GND	The ground return for supply and signals.

Copyright © 2005–2013, Texas Instruments Incorporated

These devices have limited built-in ESD protection. The leads should be shorted together or the device placed in conductive foam during storage or handling to prevent electrostatic damage to the MOS gates.

Absolute Maximum Ratings[1][2][3]

Supply Voltage V_A		−0.3V to 6.5V
Voltage on Any Pin to GND		−0.3V to V_A +0.3V
Input Current at Any Pin[4]		±10 mA
Package Input Current[4]		±20 mA
Power Consumption at T_A = 25°C		See[5]
ESD Susceptibility[6]	Human Body Model	2500V
	Machine Model	250V
Junction Temperature		+150°C
Storage Temperature		−65°C to +150°C

(1) Absolute Maximum Ratings indicate limits beyond which damage to the device may occur. Operating Ratings indicate conditions for which the device is functional, but do not ensure specific performance limits. For guaranteed specifications and test conditions, see the Electrical Characteristics. The specified specifications apply only for the test conditions listed. Some performance characteristics may degrade when the device is not operated under the listed test conditions.
(2) All voltages are measured with respect to GND = 0V, unless otherwise specified.
(3) If Military/Aerospace specified devices are required, please contact the Texas Instruments Sales Office/ Distributors for availability and specifications.
(4) When the input voltage at any pin exceeds the power supply (that is, V_{IN} < GND or V_{IN} > V_A), the current at that pin should be limited to 10 mA. The 20 mA maximum package input current rating limits the number of pins that can safely exceed the power supplies with an input current of 10 mA to two. The Absolute Maximum Rating specification does not apply to the V_A pin. The current into the V_A pin is limited by the Analog Supply Voltage specification.
(5) The absolute maximum junction temperature ($T_J$max) for this device is 150°C. The maximum allowable power dissipation is dictated by $T_J$max, the junction-to-ambient thermal resistance (θ_{JA}), and the ambient temperature (T_A), and can be calculated using the formula $P_D MAX = (T_J max - T_A)/\theta_{JA}$. The values for maximum power dissipation listed above will be reached only when the device is operated in a severe fault condition (e.g. when input or output pins are driven beyond the power supply voltages, or the power supply polarity is reversed). Obviously, such conditions should always be avoided.
(6) Human body model is 100 pF capacitor discharged through a 1.5 kΩ resistor. Machine model is 220 pF discharged through zero ohms.

Operating Ratings[1][2]

Operating Temperature Range	−40°C ≤ T_A ≤ +85°C
V_A Supply Voltage	+2.7V to +5.25V
Digital Input Pins Voltage Range	−0.3V to V_A
Clock Frequency	50 kHz to 16 MHz
Analog Input Voltage	0V to V_A

(1) Absolute Maximum Ratings indicate limits beyond which damage to the device may occur. Operating Ratings indicate conditions for which the device is functional, but do not ensure specific performance limits. For guaranteed specifications and test conditions, see the Electrical Characteristics. The specified specifications apply only for the test conditions listed. Some performance characteristics may degrade when the device is not operated under the listed test conditions.
(2) All voltages are measured with respect to GND = 0V, unless otherwise specified.

Package Thermal Resistance[1]

Package	θ_{JA}
10-lead VSSOP	190°C / W

(1) Soldering process must comply with Reflow Temperature Profile specifications. Refer to www.ti.com/packaging. Reflow temperature profiles are different for lead-free and non-lead-free packages.

Copyright © 2005–2013, Texas Instruments Incorporated

ADC084S101 Converter Electrical Characteristics(1)

The following specifications apply for V_A = +2.7V to 5.25V, GND = 0V, f_{SCLK} = 8 MHz to 16 MHz, f_{SAMPLE} = 500 ksps to 1 Msps, C_L = 50 pF, unless otherwise noted. **Boldface limits apply for $T_A = T_{MIN}$ to T_{MAX}**: all other limits T_A = 25°C.

Symbol	Parameter	Conditions	Typical	Limits(2)	Units
STATIC CONVERTER CHARACTERISTICS					
	Resolution with No Missing Codes			**8**	Bits
INL	Integral Non-Linearity		±0.13	**±0.4**	LSB (max)
DNL	Differential Non-Linearity		±0.10	**±0.4**	LSB (max)
V_{OFF}	Offset Error		+0.53	**±0.7**	LSB (max)
OEM	Channel to Channel Offset Error Match		0.005	**±0.3**	LSB (max)
FSE	Full Scale Error		0.52	**±0.7**	LSB (max)
FSEM	Channel to Channel Full Scale Error Match		0.005	**±0.3**	LSB (max)
DYNAMIC CONVERTER CHARACTERISTICS					
SINAD	Signal-to-Noise Plus Distortion Ratio	V_A = +2.7V to 5.25V f_{IN} = 40.3 kHz, −0.02 dBFS	49.6	**49.1**	dB (min)
SNR	Signal-to-Noise Ratio	V_A = +2.7V to 5.25V f_{IN} = 40.3 kHz, −0.02 dBFS	49.6	**49.2**	dB (min)
THD	Total Harmonic Distortion	V_A = +2.7V to 5.25V f_{IN} = 40.3 kHz, −0.02 dBFS	−75	**−62**	dB (max)
SFDR	Spurious-Free Dynamic Range	V_A = +2.7V to 5.25V f_{IN} = 40.3 kHz, −0.02 dBFS	67	**63**	dB (min)
ENOB	Effective Number of Bits	V_A = +2.7V to 5.25V f_{IN} = 40.3 kHz, −0.02 dBFS	7.9	**7.9**	Bits (min)
	Channel-to-Channel Crosstalk	V_A = +5.25V f_{IN} = 40.3 kHz	−73		dB
IMD	Intermodulation Distortion, Second Order Terms	V_A = +5.25V f_a = 40.161 kHz, f_b = 41.015 kHz	−78		dB
	Intermodulation Distortion, Third Order Terms	V_A = +5.25V f_a = 40.161 kHz, f_b = 41.015 kHz	−73		dB
FPBW	-3 dB Full Power Bandwidth	V_A = +5V	11		MHz
		V_A = +3V	8		MHz
ANALOG INPUT CHARACTERISTICS					
V_{IN}	Input Range		0 to V_A		V
I_{DCL}	DC Leakage Current			**±1**	µA (max)
C_{INA}	Input Capacitance	Track Mode	33		pF
		Hold Mode	3		pF
DIGITAL INPUT CHARACTERISTICS					
V_{IH}	Input High Voltage	V_A = +5.25V		**2.4**	V (min)
		V_A = +3.6V		**2.1**	V (min)
V_{IL}	Input Low Voltage			**0.8**	V (max)
I_{IN}	Input Current	V_{IN} = 0V or V_A		**±10**	µA (max)
C_{IND}	Digital Input Capacitance		2	**4**	pF (max)
DIGITAL OUTPUT CHARACTERISTICS					
V_{OH}	Output High Voltage	I_{SOURCE} = 200 µA	V_A − 0.03	**V_A − 0.5**	V (min)
		I_{SOURCE} = 1 mA	V_A − 0.1		V
V_{OL}	Output Low Voltage	I_{SINK} = 200 µA	0.03	**0.4**	V (max)
		I_{SINK} = 1 mA	0.1		V
I_{OZH}, I_{OZL}	TRI-STATE Leakage Current		±0.01	**±1**	µA (max)
C_{OUT}	TRI-STATE Output Capacitance		2	**4**	pF (max)
	Output Coding		Straight (Natural) Binary		

(1) Min/max specification limits are specified by design, test, or statistical analysis.
(2) Tested limits are ensured to AOQL (Average Outgoing Quality Level).

Copyright © 2005–2013, Texas Instruments Incorporated

ADC084S101 Converter Electrical Characteristics(1) (continued)

The following specifications apply for V_A = +2.7V to 5.25V, GND = 0V, f_{SCLK} = 8 MHz to 16 MHz, f_{SAMPLE} = 500 ksps to 1 Msps, C_L = 50 pF, unless otherwise noted. **Boldface limits apply for $T_A = T_{MIN}$ to T_{MAX}**: all other limits T_A = 25°C.

Symbol	Parameter	Conditions	Typical	Limits(2)	Units
POWER SUPPLY CHARACTERISTICS (C_L = 10 pF)					
V_A	Supply Voltage			**2.7**	V (min)
				5.25	V (max)
I_A	Supply Current, Normal Mode (Operational, $\overline{CS}$ low)	V_A = +5.25V, f_{SAMPLE} = 1 Msps, f_{IN} = 40 kHz	1.82	**2.4**	mA (max)
		V_A = +3.6V, f_{SAMPLE} = 1 Msps, f_{IN} = 40 kHz	0.9	**1.2**	mA (max)
	Supply Current, Shutdown ($\overline{CS}$ high)	V_A = +5.25V, f_{SAMPLE} = 0 ksps	200		nA
		V_A = +3.6V, f_{SAMPLE} = 0 ksps	200		nA
P_D	Power Consumption, Normal Mode (Operational, $\overline{CS}$ low)	V_A = +5.25V	9.6	**12.6**	mW (max)
		V_A = +3.6V	3.2	**4.3**	mW (max)
	Power Consumption, Shutdown ($\overline{CS}$ high)	V_A = +5.25V	0.35		µW
		V_A = +3.6V	0.12		µW
AC ELECTRICAL CHARACTERISTICS					
f_{SCLK}	Clock Frequency	See(3)		**8**	MHz (min)
				16	MHz (max)
f_S	Sample Rate	See(3)		**500**	ksps (min)
				1	Msps (max)
t_{CONV}	Conversion Time			**13**	SCLK cycles
DC	SCLK Duty Cycle	f_{SCLK} = 16 MHz	50	**30**	% (min)
				70	% (max)
t_{ACQ}	Track/Hold Acquisition Time	Full-Scale Step Input		**3**	SCLK cycles
	Throughput Time	Acquisition Time + Conversion Time		**16**	SCLK cycles

(3) This is the frequency range over which the electrical performance is ensured. The device is functional over a wider range which is specified under Operating Ratings.

Copyright © 2005–2013, Texas Instruments Incorporated

ADC084S101 Timing Specifications

The following specifications apply for V_A = +2.7V to 5.25V, GND = 0V, f_{SCLK} = 8 MHz to 16 MHz, f_{SAMPLE} = 500 ksps to 1 Msps, C_L = 50 pF, **Boldface limits apply for $T_A = T_{MIN}$ to T_{MAX}**: all other limits T_A = 25°C.

Symbol	Parameter	Conditions		Typical	Limits[1]	Units
t_{CSU}	Setup Time SCLK High to $\overline{CS}$ Falling Edge	See[2]	V_A = +3.0V	−3.5	**10**	ns (min)
			V_A = +5.0V	−0.5		
t_{CLH}	Hold time SCLK Low to $\overline{CS}$ Falling Edge	See[2]	V_A = +3.0V	+4.5	**10**	ns (min)
			V_A = +5.0V	+1.5		
t_{EN}	Delay from $\overline{CS}$ Until DOUT active		V_A = +3.0V	+4	**30**	ns (max)
			V_A = +5.0V	+2		
t_{ACC}	Data Access Time after SCLK Falling Edge		V_A = +3.0V	+16.5	**30**	ns (max)
			V_A = +5.0V	+15		
t_{SU}	Data Setup Time Prior to SCLK Rising Edge			+3	**10**	ns (min)
t_H	Data Valid SCLK Hold Time			+3	**10**	ns (min)
t_{CH}	SCLK High Pulse Width			0.5 x t_{SCLK}	**0.3 x t_{SCLK}**	ns (min)
t_{CL}	SCLK Low Pulse Width			0.5 x t_{SCLK}	**0.3 x t_{SCLK}**	ns (min)
t_{DIS}	$\overline{CS}$ Rising Edge to DOUT High-Impedance	Output Falling	V_A = +3.0V	1.7	**20**	ns (max)
			V_A = +5.0V	1.2		
		Output Rising	V_A = +3.0V	1.0		
			V_A = +5.0V	1.0		

(1) Tested limits are ensured to AOQL (Average Outgoing Quality Level).
(2) Clock may be either high or low when $\overline{CS}$ is asserted as long as setup and hold times t_{CSU} and t_{CLH} are strictly observed..

Copyright © 2005–2013, Texas Instruments Incorporated

Timing Diagrams

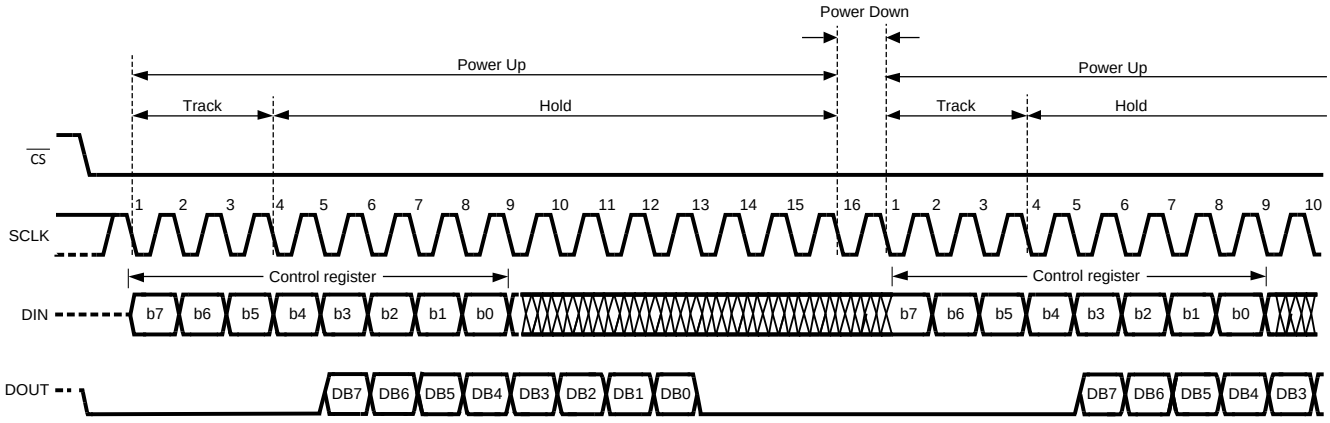

Figure 2. ADC084S101 Operational Timing Diagram

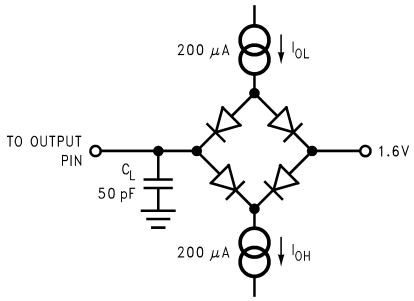

Figure 3. Timing Test Circuit

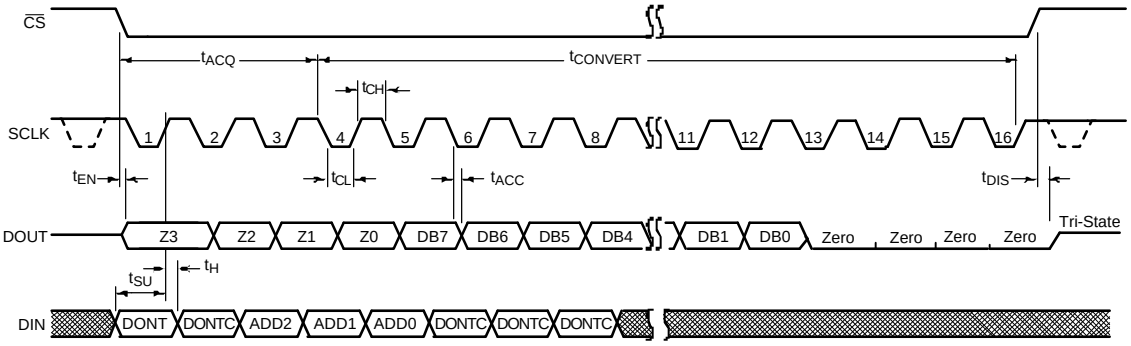

Figure 4. ADC084S101 Serial Timing Diagram

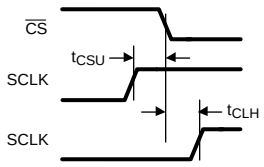

Figure 5. SCLK and $\overline{CS}$ Timing Parameters

Specification Definitions

ACQUISITION TIME is the time required to acquire the input voltage. That is, it is time required for the hold capacitor to charge up to the input voltage.

APERTURE DELAY is the time between the fourth falling SCLK edge of a conversion and the time when the input signal is acquired or held for conversion.

CONVERSION TIME is the time required, after the input voltage is acquired, for the ADC to convert the input voltage to a digital word.

CROSSTALK is the coupling of energy from one channel into the other channel, or the amount of signal energy from one analog input that appears at the measured analog input.

DIFFERENTIAL NON-LINEARITY (DNL) is the measure of the maximum deviation from the ideal step size of 1 LSB.

DUTY CYCLE is the ratio of the time that a repetitive digital waveform is high to the total time of one period. The specification here refers to the SCLK.

EFFECTIVE NUMBER OF BITS (ENOB, or EFFECTIVE BITS) is another method of specifying Signal-to-Noise and Distortion or SINAD. ENOB is defined as (SINAD − 1.76) / 6.02 and says that the converter is equivalent to a perfect ADC of this (ENOB) number of bits.

FULL POWER BANDWIDTH is a measure of the frequency at which the reconstructed output fundamental drops 3 dB below its low frequency value for a full scale input.

FULL SCALE ERROR (FSE) is a measure of how far the last code transition is from the ideal 1½ LSB below V_{REF^+} and is defined as:

$$V_{FSE} = V_{max} + 1.5\ LSB - V_{REF^+} \quad (1)$$

where

- **GAIN ERROR** is the deviation of the last code transition (111...110) to (111...111) from the ideal (V_{REF} − 1.5 LSB), after adjusting for offset error.

INTEGRAL NON-LINEARITY (INL) is a measure of the deviation of each individual code from a line drawn from negative full scale (½ LSB below the first code transition) through positive full scale (½ LSB above the last code transition). The deviation of any given code from this straight line is measured from the center of that code value.

INTERMODULATION DISTORTION (IMD) is the creation of additional spectral components as a result of two sinusoidal frequencies being applied to the ADC input at the same time. It is defined as the ratio of the power in the second and third order intermodulation products to the sum of the power in both of the original frequencies. IMD is usually expressed in dB.

MISSING CODES are those output codes that will never appear at the ADC outputs. These codes cannot be reached with any input value. The ADC084S101 is ensured not to have any missing codes.

OFFSET ERROR is the deviation of the first code transition (000...000) to (000...001) from the ideal (i.e. GND + 0.5 LSB).

SIGNAL TO NOISE RATIO (SNR) is the ratio, expressed in dB, of the rms value of the input signal to the rms value of the sum of all other spectral components below one-half the sampling frequency, not including harmonics or d.c.

SIGNAL TO NOISE PLUS DISTORTION (S/N+D or SINAD) Is the ratio, expressed in dB, of the rms value of the input signal to the rms value of all of the other spectral components below half the clock frequency, including harmonics but excluding d.c.

SPURIOUS FREE DYNAMIC RANGE (SFDR) is the difference, expressed in dB, between the rms values of the input signal and the peak spurious signal where a spurious signal is any signal present in the output spectrum that is not present at the input, excluding d.c.

Copyright © 2005–2013, Texas Instruments Incorporated

TOTAL HARMONIC DISTORTION (THD) is the ratio, expressed in dB or dBc, of the rms total of the first five harmonic components at the output to the rms level of the input signal frequency as seen at the output. THD is calculated as

$$THD = 20 \cdot \log_{10} \sqrt{\frac{A_{f2}^2 + \cdots + A_{f6}^2}{A_{f1}^2}} \quad (2)$$

where

- Af_1 is the RMS power of the input frequency at the output and Af_2 through Af_6 are the RMS power in the first 5 harmonic frequencies.

THROUGHPUT TIME is the minimum time required between the start of two successive conversion. It is the acquisition time plus the conversion and read out times. In the case of the ADC084S101, this is 16 SCLK periods.

Copyright © 2005–2013, Texas Instruments Incorporated

Typical Performance Characteristics

T_A = +25°C, f_{SAMPLE} = 500 ksps to 1 Msps, f_{SCLK} = 8 MHz to 16 MHz, f_{IN} = 40.3 kHz unless otherwise stated.

DNL - V_A = 3.0V

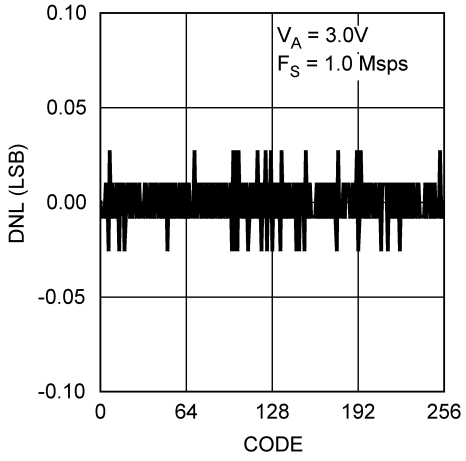

Figure 6.

INL - V_A = 3.0V

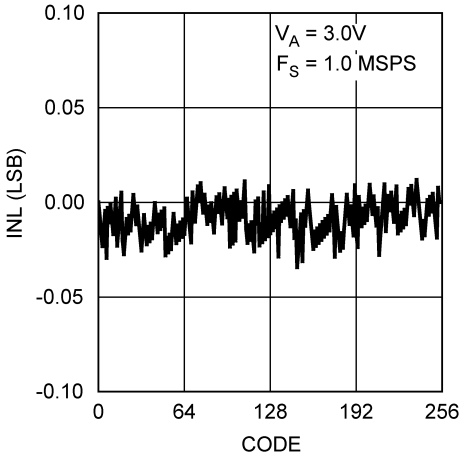

Figure 7.

DNL - V_A = 5.0V

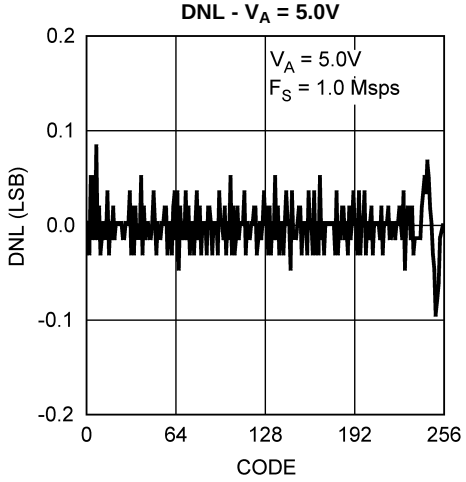

Figure 8.

INL - V_A = 5.0V

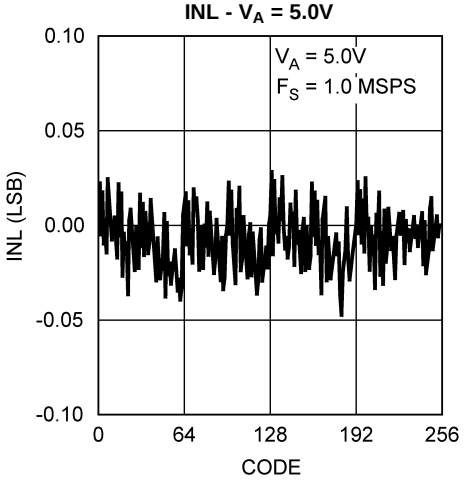

Figure 9.

DNL vs. Supply

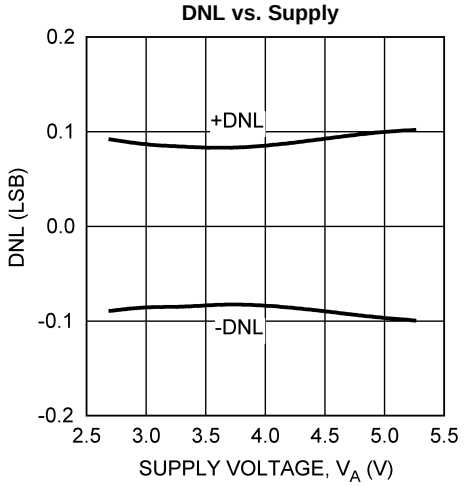

Figure 10.

INL vs. Supply

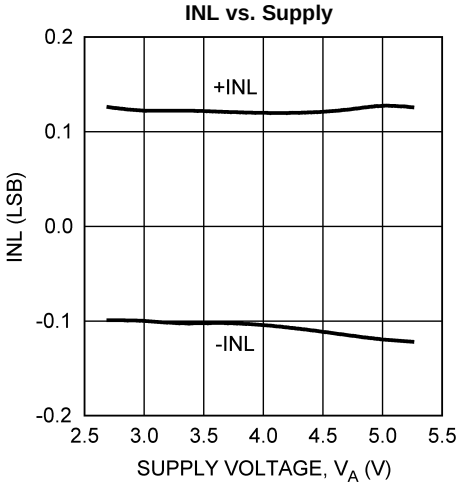

Figure 11.

Copyright © 2005–2013, Texas Instruments Incorporated

Typical Performance Characteristics (continued)

T_A = +25°C, f_{SAMPLE} = 500 ksps to 1 Msps, f_{SCLK} = 8 MHz to 16 MHz, f_{IN} = 40.3 kHz unless otherwise stated.

DNL vs. Clock Frequency

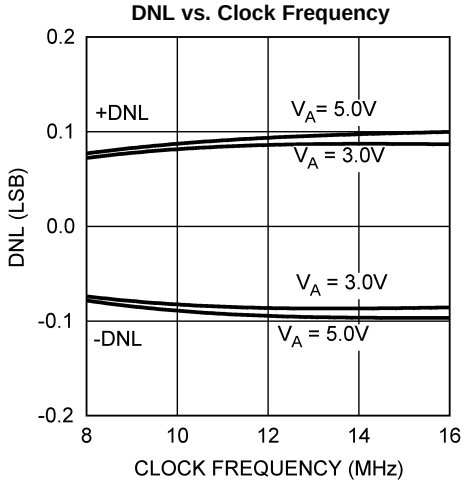

Figure 12.

INL vs. Clock Frequency

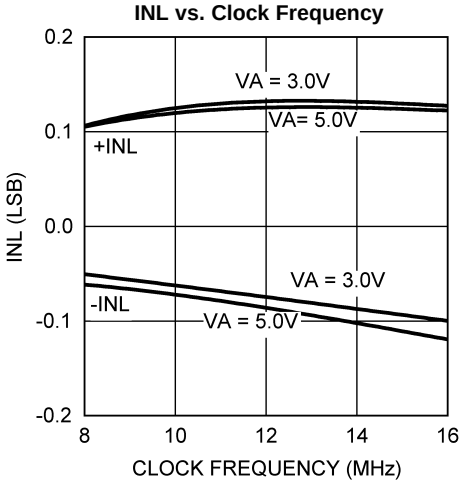

Figure 13.

DNL vs. Clock Duty Cycle

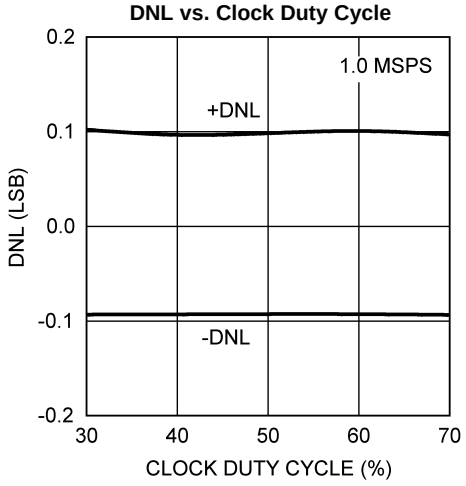

Figure 14.

INL vs. Clock Duty Cycle

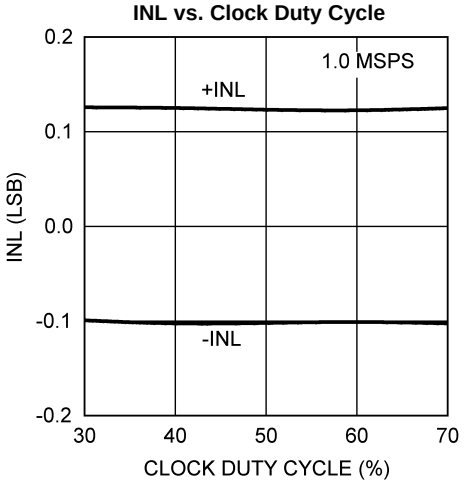

Figure 15.

DNL vs. Temperature

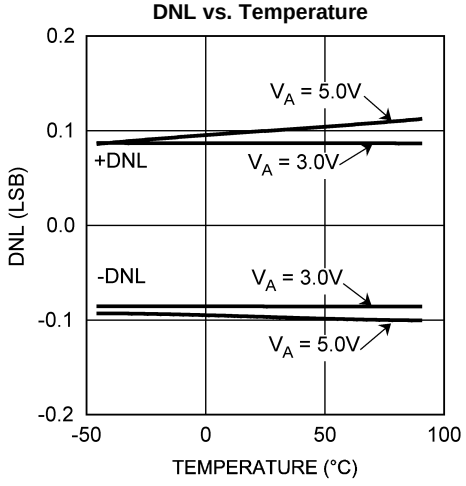

Figure 16.

INL vs. Temperature

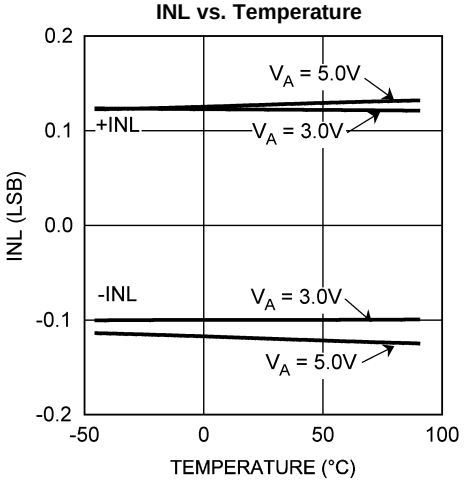

Figure 17.

Copyright © 2005–2013, Texas Instruments Incorporated

Typical Performance Characteristics (continued)

T_A = +25°C, f_{SAMPLE} = 500 ksps to 1 Msps, f_{SCLK} = 8 MHz to 16 MHz, f_{IN} = 40.3 kHz unless otherwise stated.

SNR vs. Supply

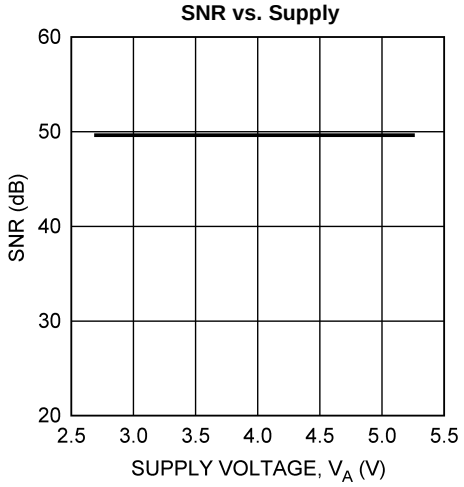

Figure 18.

THD vs. Supply

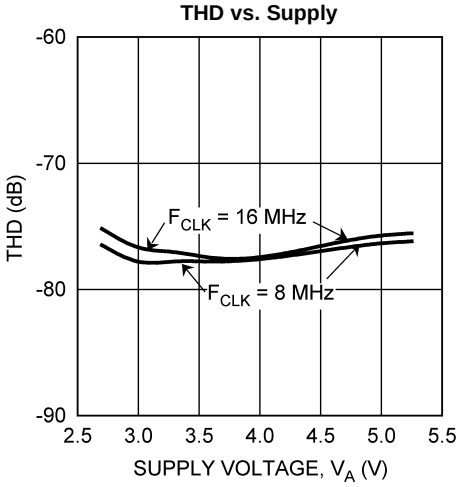

Figure 19.

SNR vs. Clock Frequency

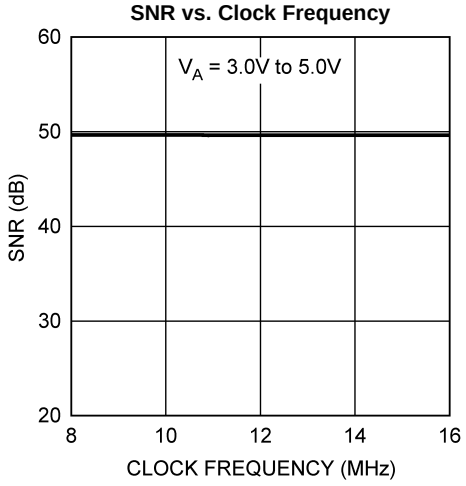

Figure 20.

THD vs. Clock Frequency

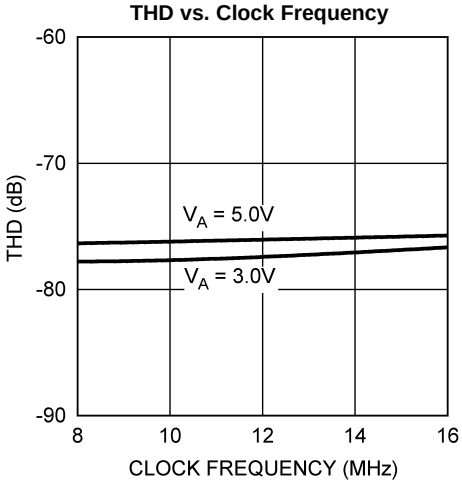

Figure 21.

SNR vs. Clock Duty Cycle

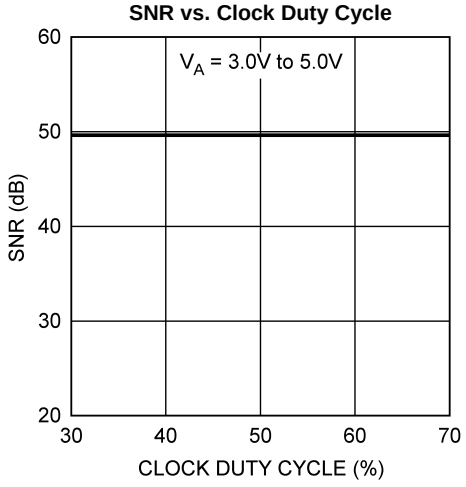

Figure 22.

THD vs. Clock Duty Cycle

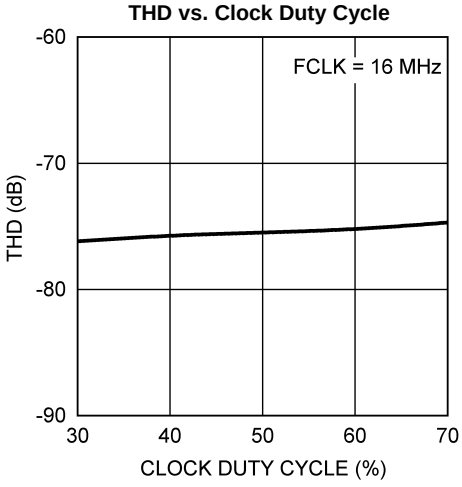

Figure 23.

Copyright © 2005–2013, Texas Instruments Incorporated

Typical Performance Characteristics (continued)

T_A = +25°C, f_{SAMPLE} = 500 ksps to 1 Msps, f_{SCLK} = 8 MHz to 16 MHz, f_{IN} = 40.3 kHz unless otherwise stated.

SNR vs. Input Frequency

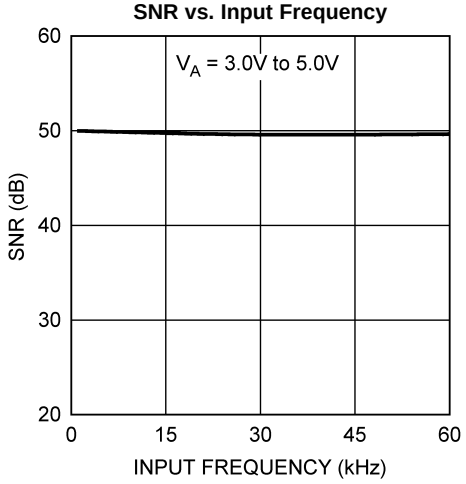

Figure 24.

THD vs. Input Frequency

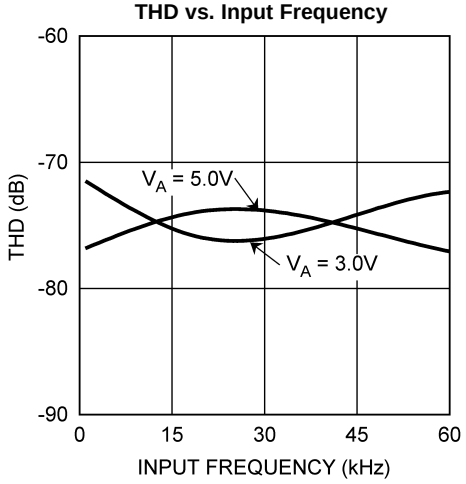

Figure 25.

SNR vs. Temperature

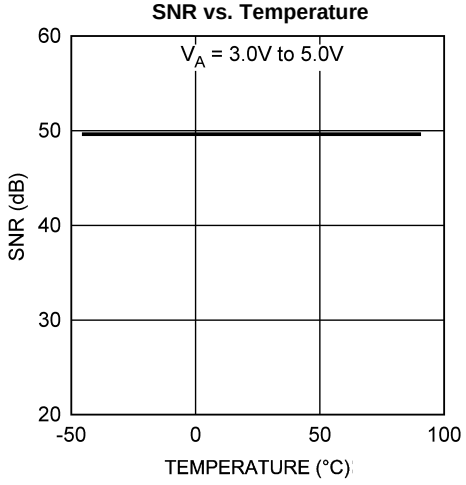

Figure 26.

THD vs. Temperature

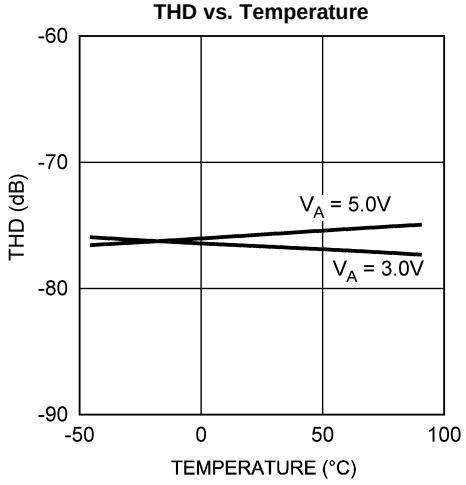

Figure 27.

SFDR vs. Supply

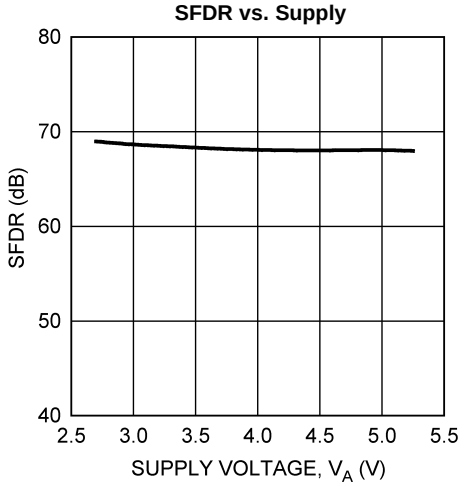

Figure 28.

SINAD vs. Supply

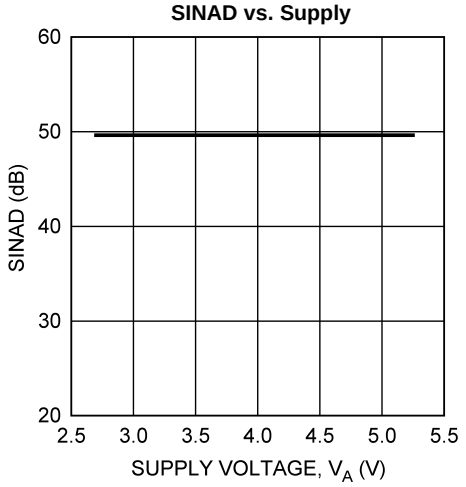

Figure 29.

Copyright © 2005–2013, Texas Instruments Incorporated

Typical Performance Characteristics (continued)

T_A = +25°C, f_{SAMPLE} = 500 ksps to 1 Msps, f_{SCLK} = 8 MHz to 16 MHz, f_{IN} = 40.3 kHz unless otherwise stated.

SFDR vs. Clock Frequency

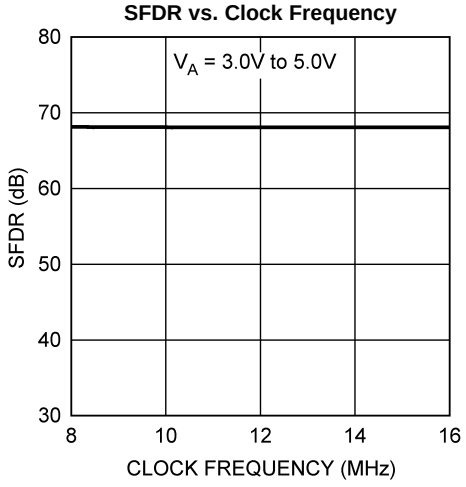

Figure 30.

SINAD vs. Clock Frequency

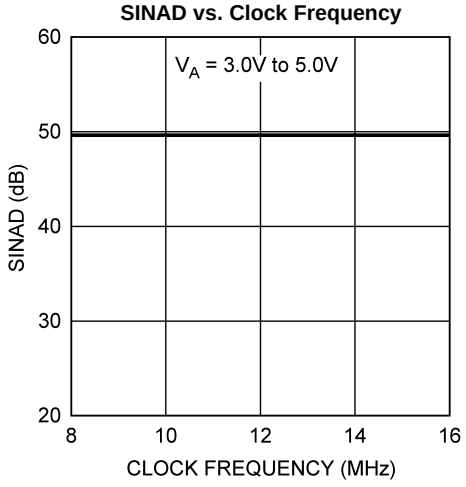

Figure 31.

SFDR vs. Clock Duty Cycle

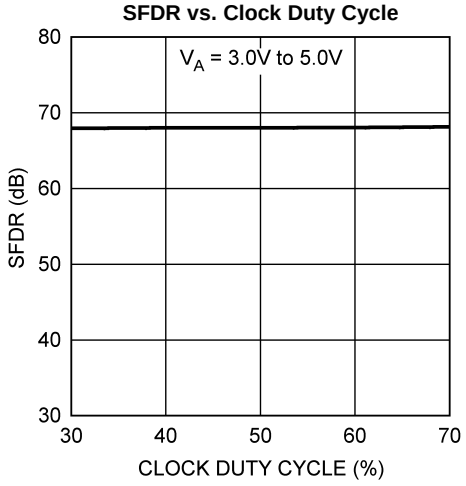

Figure 32.

SINAD vs. Clock Duty Cycle

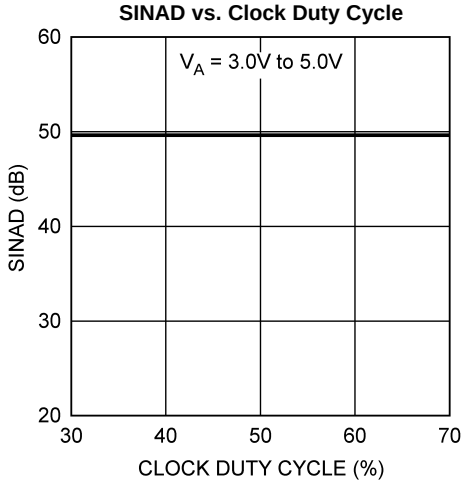

Figure 33.

SFDR vs. Input Frequency

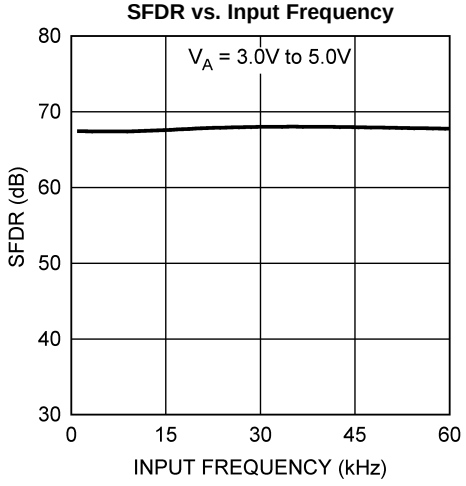

Figure 34.

SINAD vs. Input Frequency

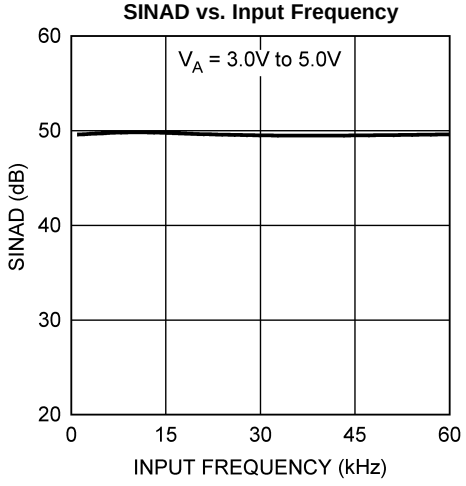

Figure 35.

Copyright © 2005–2013, Texas Instruments Incorporated

Typical Performance Characteristics (continued)

T_A = +25°C, f_{SAMPLE} = 500 ksps to 1 Msps, f_{SCLK} = 8 MHz to 16 MHz, f_{IN} = 40.3 kHz unless otherwise stated.

SFDR vs. Temperature

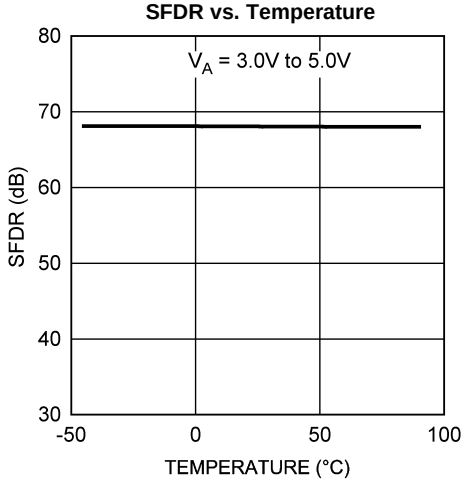

Figure 36.

SINAD vs. Temperature

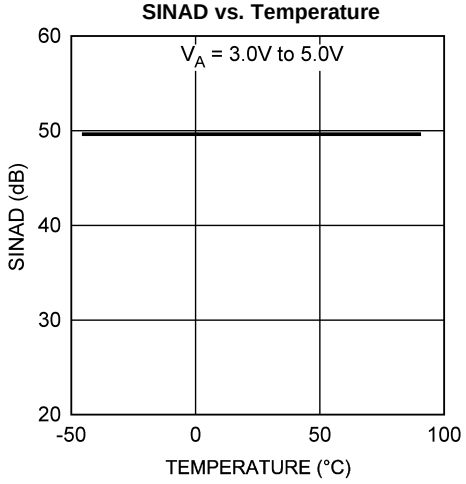

Figure 37.

ENOB vs. Supply

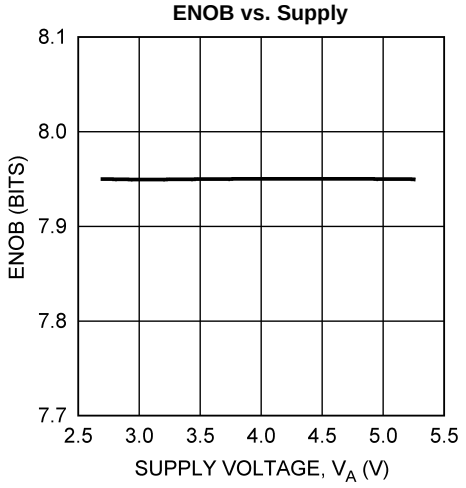

Figure 38.

ENOB vs. Clock Frequency

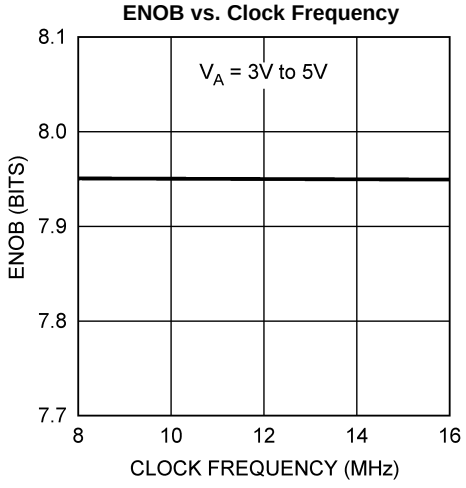

Figure 39.

ENOB vs. Clock Duty Cycle

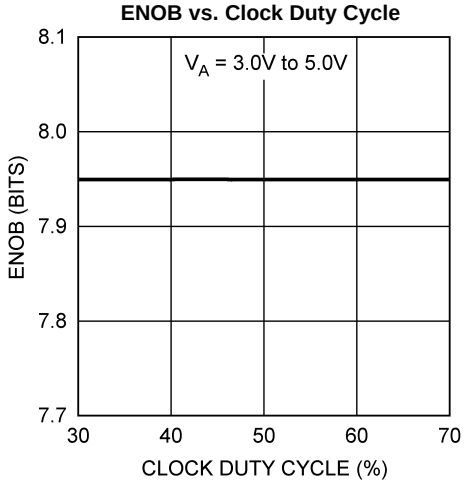

Figure 40.

ENOB vs. Input Frequency

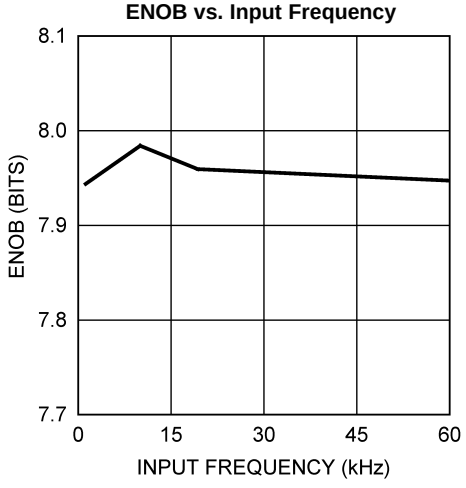

Figure 41.

Copyright © 2005–2013, Texas Instruments Incorporated

Typical Performance Characteristics (continued)

T_A = +25°C, f_{SAMPLE} = 500 ksps to 1 Msps, f_{SCLK} = 8 MHz to 16 MHz, f_{IN} = 40.3 kHz unless otherwise stated.

ENOB vs. Temperature

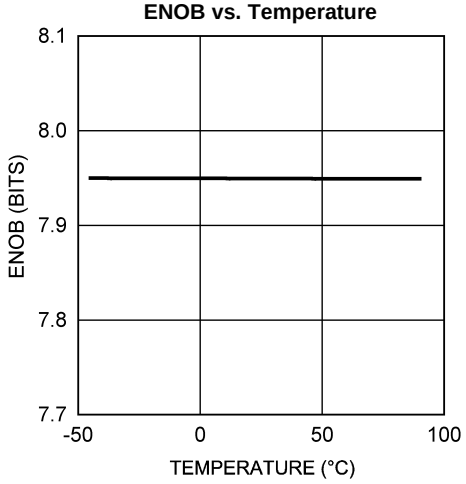

Figure 42.

Spectral Response - 3V, 1 Msps

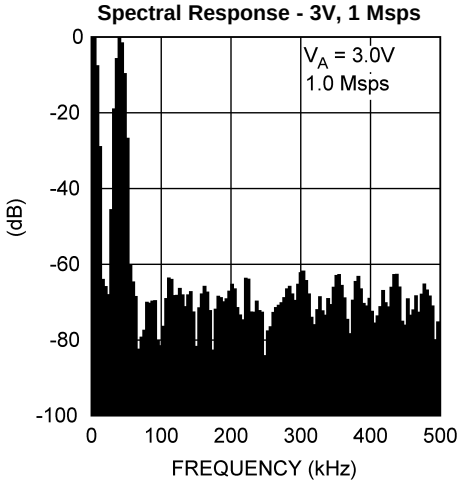

Figure 43.

Spectral Response - 5V, 1 Msps

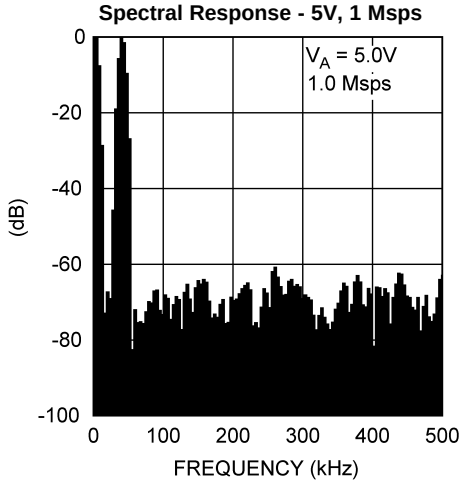

Figure 44.

Spectral Response - 3V, 500 ksps

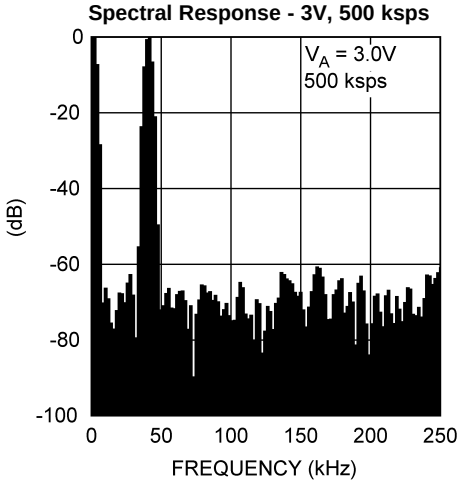

Figure 45.

Spectral Response - 5V, 500 ksps

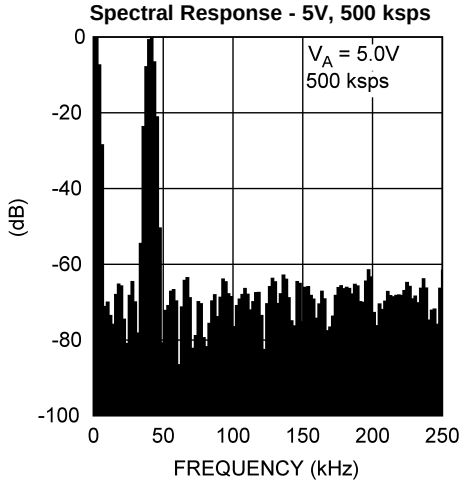

Figure 46.

Power Consumption vs. Throughput

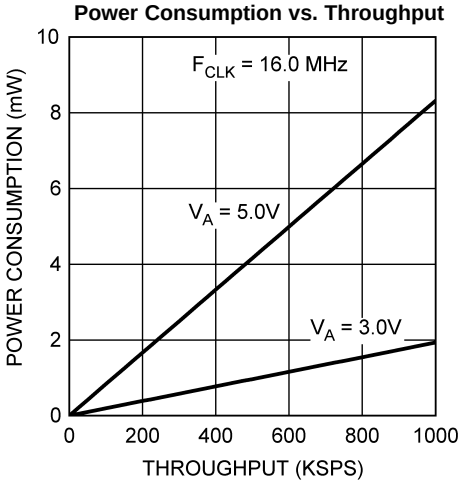

Figure 47.

Copyright © 2005–2013, Texas Instruments Incorporated

APPLICATIONS INFORMATION

ADC084S101 OPERATION

The ADC084S101 is a successive-approximation analog-to-digital converter designed around a charge-redistribution digital-to-analog converter. Simplified schematics of the ADC084S101 in both track and hold modes are shown in Figure 48 and Figure 49, respectively. In Figure 48, the ADC084S101 is in track mode: switch SW1 connects the sampling capacitor to one of four analog input channels through the multiplexer, and SW2 balances the comparator inputs. The ADC084S101 is in this state for the first three SCLK cycles after $\overline{CS}$ is brought low.

Figure 49 shows the ADC084S101 in hold mode: switch SW1 connects the sampling capacitor to ground, maintaining the sampled voltage, and switch SW2 unbalances the comparator. The control logic then instructs the charge-redistribution DAC to add fixed amounts of charge to the sampling capacitor until the comparator is balanced. When the comparator is balanced, the digital word supplied to the DAC is the digital representation of the analog input voltage. The ADC084S101 is in this state for the fourth through sixteenth SCLK cycles after $\overline{CS}$ is brought low.

The time when $\overline{CS}$ is low is considered a serial frame. Each of these frames should contain an integer multiple of 16 SCLK cycles, during which time a conversion is performed and clocked out at the DOUT pin and data is clocked into the DIN pin to indicate the multiplexer address for the next conversion.

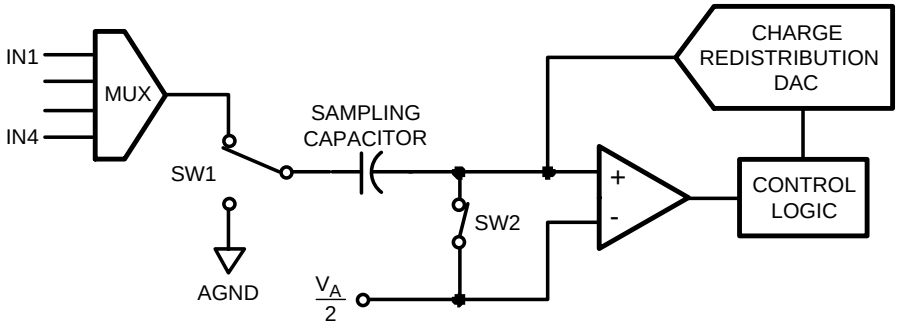

Figure 48. ADC084S101 in Track Mode

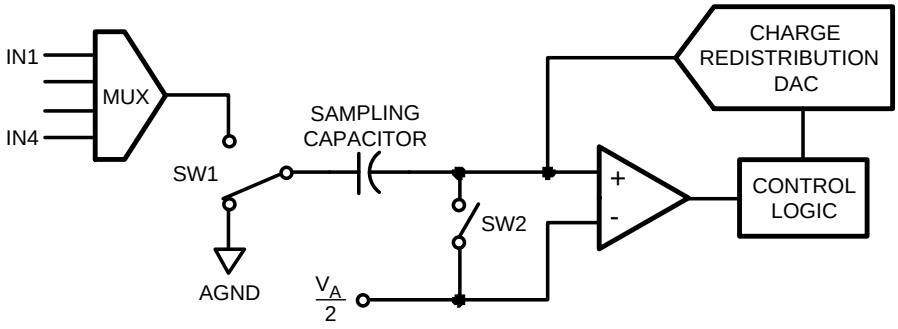

Figure 49. ADC084S101 in Hold Mode

USING THE ADC084S101

An ADC084S101 timing diagram and a serial interface timing diagram for the ADC084S101 are shown in the Timing Diagrams section. $\overline{CS}$ is chip select, which initiates conversions and frames the serial data transfers. SCLK (serial clock) controls both the conversion process and the timing of serial data. DOUT is the serial data output pin, where a conversion result is sent as a serial data stream, MSB first. Data to be written to the ADC084S101's Control Register is placed on DIN, the serial data input pin. New data is written to the ADC at DIN with each conversion.

A serial frame is initiated on the falling edge of $\overline{CS}$ and ends on the rising edge of $\overline{CS}$. Each frame must contain an integer multiple of 16 rising SCLK edges. The ADC output data (DOUT) is in a high impedance state when $\overline{CS}$ is high and is active when $\overline{CS}$ is low. Thus, $\overline{CS}$ acts as an output enable. Additionally, the device goes into a power down state when $\overline{CS}$ is high, and also between continuous conversion cycles.

During the first 3 cycles of SCLK, the ADC is in the track mode, acquiring the input voltage. For the next 13 SCLK cycles the conversion is accomplished and the data is clocked out, MSB first, starting on the 5th clock. If there is more than one conversion in a frame, the ADC will re-enter the track mode on the falling edge of SCLK after the N*16th rising edge of SCLK, and re-enter the hold/convert mode on the N*16+4th falling edge of SCLK, where "N" is an integer.

When $\overline{CS}$ is brought high, SCLK is internally gated off. If SCLK is stopped in the low state while $\overline{CS}$ is high, the subsequent fall of $\overline{CS}$ will generate a falling edge of the internal version of SCLK, putting the ADC into the track mode. This is seen by the ADC as the first falling edge of SCLK. If SCLK is stopped with SCLK high, the ADC enters the track mode on the first falling edge of SCLK after the falling edge of $\overline{CS}$.

During each conversion, data is clocked into the DIN pin on the first 8 rising edges of SCLK after the fall of $\overline{CS}$. For each conversion, it is necessary to clock in the data indicating the input that is selected for the conversion after the current one. See Table 2, Table 3, and Table 4.

If $\overline{CS}$ and SCLK go low within the times defined by t_{CSU} and t_{CLH}, the rising edge of SCLK that begins clocking data in at DIN may be one clock cycle later than expected. It is, therefore, best to strictly observe the minimum t_{CSU} and t_{CLH} times given in the Timing Specifications.

There are no power-up delays or dummy conversions required with the ADC084S101. The ADC is able to sample and convert an input to full conversion immediately following power up. The first conversion result after power-up will be that of IN1.

Table 2. Control Register Bits

Bit 7 (MSB)	Bit 6	Bit 5	Bit 4	Bit 3	Bit 2	Bit 1	Bit 0
DONTC	**DONTC**	**ADD2**	**ADD1**	**ADD0**	**DONTC**	**DONTC**	**DONTC**

Table 3. Control Register Bit Descriptions

Bit #:	Symbol:	Description
7 - 6, 2 - 0	DONTC	Don't care. The value of these bits do not affect device operation.
5	ADD2	These three bits determine which input channel will be sampled and converted in the next track/hold cycle. The mapping between codes and channels is shown in Table 4.
4	ADD1	
3	ADD0	

Table 4. Input Channel Selection

ADD2	ADD1	ADD0	Input Channel
x	0	0	IN1 (Default)
x	0	1	IN2
x	1	0	IN3
x	1	1	IN4

Copyright © 2005–2013, Texas Instruments Incorporated

ADC084S101 TRANSFER FUNCTION

The output format of the ADC084S101 is straight binary. Code transitions occur midway between successive integer LSB values. The LSB width for the ADC084S101 is V_A/256. The ideal transfer characteristic is shown in Figure 50. The transition from an output code of 0000 0000 to a code of 0000 0001 is at 1/2 LSB, or a voltage of V_A/512. Other code transitions occur at steps of one LSB.

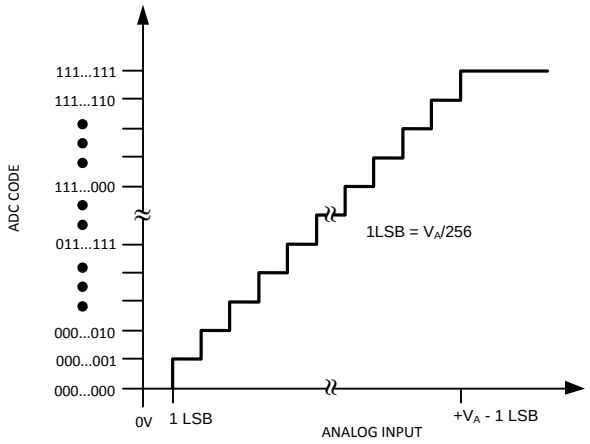

Figure 50. Ideal Transfer Characteristic

TYPICAL APPLICATION CIRCUIT

A typical application of the ADC084S101 is shown in Figure 51. Power is provided in this example by the Texas Instruments LP2950 low-dropout voltage regulator, available in a variety of fixed and adjustable output voltages. The power supply pin is bypassed with a capacitor network located close to the ADC084S101.

Because the reference for the ADC084S101 is the supply voltage, any noise on the supply will degrade device noise performance. To keep noise off the supply, use a dedicated linear regulator for this device, or provide sufficient decoupling from other circuitry to keep noise off the ADC084S101 supply pin. Because of the ADC084S101's low power requirements, it is also possible to use a precision reference as a power supply to maximize performance. Because of the ADC084S101's low power requirements, it is also possible to use a precision reference as a power supply to maximize performance. The four-wire interface is also shown connected to a microprocessor or DSP.

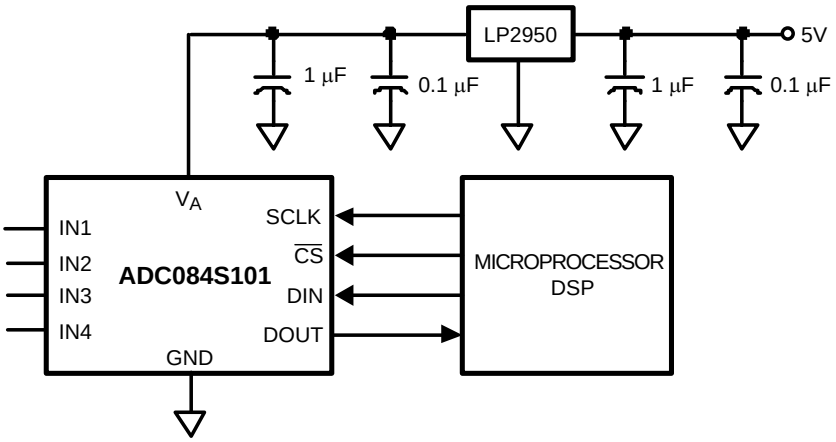

Figure 51. Typical Application Circuit

ANALOG INPUTS

An equivalent circuit for one of the ADC084S101's input channels is shown in Figure 52. Diodes D1 and D2 provide ESD protection for the analog inputs. At no time should any input go beyond (V_A + 300 mV) or (GND − 300 mV), as these ESD diodes will begin conducting, which could result in erratic operation. For this reason, these ESD diodes should NOT be used to clamp the input signal.

The capacitor C1 in Figure 52 has a typical value of 3 pF, and is mainly the package pin capacitance. Resistor R1 is the on resistance of the multiplexer and track / hold switch, and is typically 500 ohms. Capacitor C2 is the ADC084S101 sampling capacitor, and is typically 30 pF. The ADC084S101 will deliver best performance when driven by a low-impedance source to eliminate distortion caused by the charging of the sampling capacitance. This is especially important when using the ADC084S101 to sample AC signals. Also important when sampling dynamic signals is a band-pass or low-pass filter to reduce harmonics and noise, improving dynamic performance.

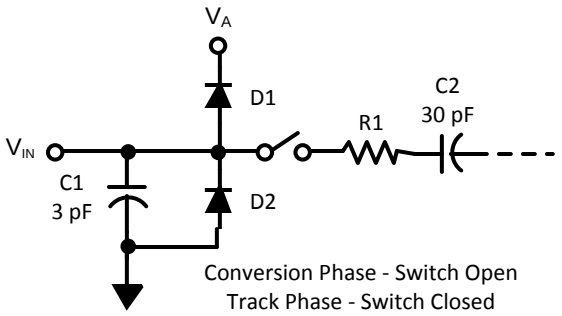

Figure 52. Equivalent Input Circuit

Copyright © 2005–2013, Texas Instruments Incorporated

DIGITAL INPUTS AND OUTPUTS

The ADC084S101's digital output DOUT is limited by, and cannot exceed, the supply voltage, V_A. The digital input pins are not prone to latch-up and, and although not recommended, SCLK, $\overline{CS}$ and DIN may be asserted before V_A without any latchup risk.

POWER SUPPLY CONSIDERATIONS

The ADC084S101 is fully powered-up whenever $\overline{CS}$ is low, and fully powered-down whenever $\overline{CS}$ is high, with one exception: the ADC084S101 automatically enters power-down mode between the 16th falling edge of a conversion and the 1st falling edge of the subsequent conversion (see Timing Diagrams).

The ADC084S101 can perform multiple conversions back to back; each conversion requires 16 SCLK cycles. The ADC084S101 will perform conversions continuously as long as $\overline{CS}$ is held low.

The user may trade off throughput for power consumption by simply performing fewer conversions per unit time. The Power Consumption vs. Sample Rate curve in the Typical Performance Characteristics section shows the typical power consumption of the ADC084S101 versus throughput. To calculate the power consumption, simply multiply the fraction of time spent in the normal mode by the normal mode power consumption , and add the fraction of time spent in shutdown mode multiplied by the shutdown mode power dissipation.

Power Management

When the ADC084S101 is operated continuously in normal mode, the maximum throughput is $f_{SCLK}/16$. Throughput may be traded for power consumption by running f_{SCLK} at its maximum 16 MHz and performing fewer conversions per unit time, putting the ADC084S101 into shutdown mode between conversions. A plot of typical power consumption versus throughput is shown in the Typical Performance Characteristics section. To calculate the power consumption for a given throughput, multiply the fraction of time spent in the normal mode by the normal mode power consumption and add the fraction of time spent in shutdown mode multiplied by the shutdown mode power consumption. Generally, the user will put the part into normal mode and then put the part back into shutdown mode. Note that the curve of power consumption vs. throughput is nearly linear. This is because the power consumption in the shutdown mode is so small that it can be ignored for all practical purposes.

Power Supply Noise Considerations

The charging of any output load capacitance requires current from the power supply, V_A. The current pulses required from the supply to charge the output capacitance will cause voltage variations on the supply. If these variations are large enough, they could degrade SNR and SINAD performance of the ADC. Furthermore, discharging the output capacitance when the digital output goes from a logic high to a logic low will dump current into the die substrate, which is resistive. Load discharge currents will cause "ground bounce" noise in the substrate that will degrade noise performance if that current is large enough. The larger is the output capacitance, the more current flows through the die substrate and the greater is the noise coupled into the analog channel, degrading noise performance.

To keep noise out of the power supply, keep the output load capacitance as small as practical. If the load capacitance is greater than 50 pF, use a 100 Ω series resistor at the ADC output, located as close to the ADC output pin as practical. This will limit the charge and discharge current of the output capacitance and improve noise performance.

Copyright © 2005–2013, Texas Instruments Incorporated

REVISION HISTORY

Changes from Revision C (March 2013) to Revision D	Page
• Changed layout of National Data Sheet to TI format	21

Copyright © 2005–2013, Texas Instruments Incorporated

PACKAGING INFORMATION

Orderable Device	Status (1)	Package Type	Package Drawing	Pins	Package Qty	Eco Plan (2)	Lead/Ball Finish	MSL Peak Temp (3)	Op Temp (°C)	Device Marking (4/5)	Samples
ADC084S101CIMM/NOPB	ACTIVE	VSSOP	DGS	10	1000	Green (RoHS & no Sb/Br)	CU SN	Level-1-260C-UNLIM	-40 to 85	X25C	Samples
ADC084S101CIMMX/NOPB	ACTIVE	VSSOP	DGS	10	3500	Green (RoHS & no Sb/Br)	CU SN	Level-1-260C-UNLIM	-40 to 85	X25C	Samples

(1) The marketing status values are defined as follows:
ACTIVE: Product device recommended for new designs.
LIFEBUY: TI has announced that the device will be discontinued, and a lifetime-buy period is in effect.
NRND: Not recommended for new designs. Device is in production to support existing customers, but TI does not recommend using this part in a new design.
PREVIEW: Device has been announced but is not in production. Samples may or may not be available.
OBSOLETE: TI has discontinued the production of the device.

(2) Eco Plan - The planned eco-friendly classification: Pb-Free (RoHS), Pb-Free (RoHS Exempt), or Green (RoHS & no Sb/Br) - please check http://www.ti.com/productcontent for the latest availability information and additional product content details.
TBD: The Pb-Free/Green conversion plan has not been defined.
Pb-Free (RoHS): TI's terms "Lead-Free" or "Pb-Free" mean semiconductor products that are compatible with the current RoHS requirements for all 6 substances, including the requirement that lead not exceed 0.1% by weight in homogeneous materials. Where designed to be soldered at high temperatures, TI Pb-Free products are suitable for use in specified lead-free processes.
Pb-Free (RoHS Exempt): This component has a RoHS exemption for either 1) lead-based flip-chip solder bumps used between the die and package, or 2) lead-based die adhesive used between the die and leadframe. The component is otherwise considered Pb-Free (RoHS compatible) as defined above.
Green (RoHS & no Sb/Br): TI defines "Green" to mean Pb-Free (RoHS compatible), and free of Bromine (Br) and Antimony (Sb) based flame retardants (Br or Sb do not exceed 0.1% by weight in homogeneous material)

(3) MSL, Peak Temp. -- The Moisture Sensitivity Level rating according to the JEDEC industry standard classifications, and peak solder temperature.

(4) There may be additional marking, which relates to the logo, the lot trace code information, or the environmental category on the device.

(5) Multiple Device Markings will be inside parentheses. Only one Device Marking contained in parentheses and separated by a "~" will appear on a device. If a line is indented then it is a continuation of the previous line and the two combined represent the entire Device Marking for that device.

Important Information and Disclaimer: The information provided on this page represents TI's knowledge and belief as of the date that it is provided. TI bases its knowledge and belief on information provided by third parties, and makes no representation or warranty as to the accuracy of such information. Efforts are underway to better integrate information from third parties. TI has taken and continues to take reasonable steps to provide representative and accurate information but may not have conducted destructive testing or chemical analysis on incoming materials and chemicals. TI and TI suppliers consider certain information to be proprietary, and thus CAS numbers and other limited information may not be available for release.

In no event shall TI's liability arising out of such information exceed the total purchase price of the TI part(s) at issue in this document sold by TI to Customer on an annual basis.

TAPE AND REEL INFORMATION

REEL DIMENSIONS

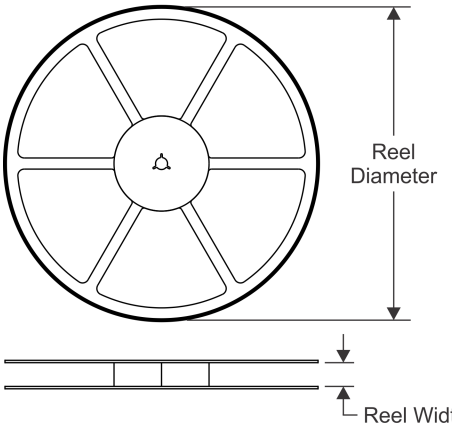

TAPE DIMENSIONS

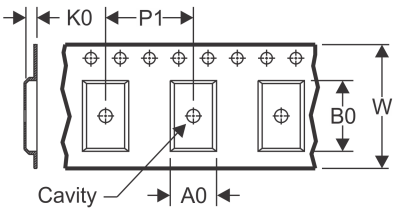

A0	Dimension designed to accommodate the component width
B0	Dimension designed to accommodate the component length
K0	Dimension designed to accommodate the component thickness
W	Overall width of the carrier tape
P1	Pitch between successive cavity centers

QUADRANT ASSIGNMENTS FOR PIN 1 ORIENTATION IN TAPE

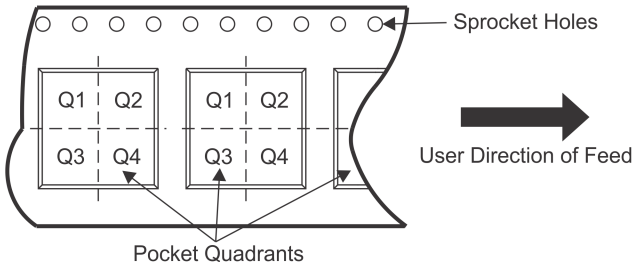

*All dimensions are nominal

Device	Package Type	Package Drawing	Pins	SPQ	Reel Diameter (mm)	Reel Width W1 (mm)	A0 (mm)	B0 (mm)	K0 (mm)	P1 (mm)	W (mm)	Pin1 Quadrant
ADC084S101CIMM/NOPB	VSSOP	DGS	10	1000	178.0	12.4	5.3	3.4	1.4	8.0	12.0	Q1
ADC084S101CIMMX/NOPB	VSSOP	DGS	10	3500	330.0	12.4	5.3	3.4	1.4	8.0	12.0	Q1

TAPE AND REEL BOX DIMENSIONS

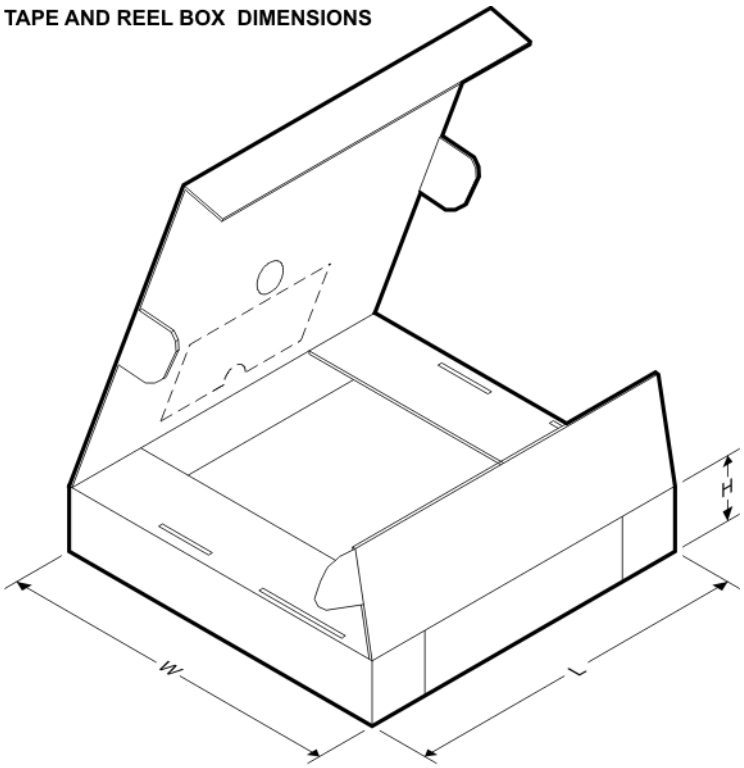

*All dimensions are nominal

Device	Package Type	Package Drawing	Pins	SPQ	Length (mm)	Width (mm)	Height (mm)
ADC084S101CIMM/NOPB	VSSOP	DGS	10	1000	210.0	185.0	35.0
ADC084S101CIMMX/NOPB	VSSOP	DGS	10	3500	367.0	367.0	35.0

DGS (S–PDSO–G10) PLASTIC SMALL–OUTLINE PACKAGE

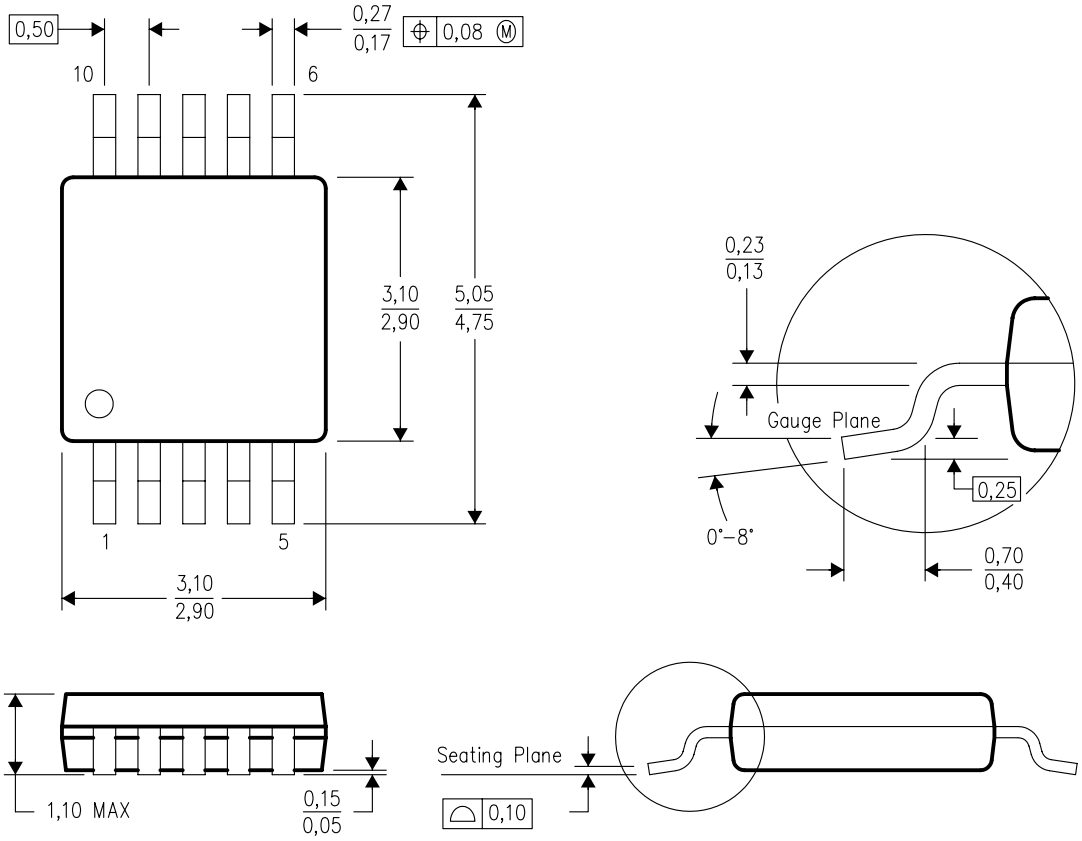

4073272/C 02/04

NOTES:
A. All linear dimensions are in millimeters.
B. This drawing is subject to change without notice.
C. Body dimensions do not include mold flash or protrusion.
D. Falls within JEDEC MO–187 variation BA.

IMPORTANT NOTICE

Texas Instruments Incorporated and its subsidiaries (TI) reserve the right to make corrections, enhancements, improvements and other changes to its semiconductor products and services per JESD46, latest issue, and to discontinue any product or service per JESD48, latest issue. Buyers should obtain the latest relevant information before placing orders and should verify that such information is current and complete. All semiconductor products (also referred to herein as “components”) are sold subject to TI’s terms and conditions of sale supplied at the time of order acknowledgment.

TI warrants performance of its components to the specifications applicable at the time of sale, in accordance with the warranty in TI’s terms and conditions of sale of semiconductor products. Testing and other quality control techniques are used to the extent TI deems necessary to support this warranty. Except where mandated by applicable law, testing of all parameters of each component is not necessarily performed.

TI assumes no liability for applications assistance or the design of Buyers’ products. Buyers are responsible for their products and applications using TI components. To minimize the risks associated with Buyers’ products and applications, Buyers should provide adequate design and operating safeguards.

TI does not warrant or represent that any license, either express or implied, is granted under any patent right, copyright, mask work right, or other intellectual property right relating to any combination, machine, or process in which TI components or services are used. Information published by TI regarding third-party products or services does not constitute a license to use such products or services or a warranty or endorsement thereof. Use of such information may require a license from a third party under the patents or other intellectual property of the third party, or a license from TI under the patents or other intellectual property of TI.

Reproduction of significant portions of TI information in TI data books or data sheets is permissible only if reproduction is without alteration and is accompanied by all associated warranties, conditions, limitations, and notices. TI is not responsible or liable for such altered documentation. Information of third parties may be subject to additional restrictions.

Resale of TI components or services with statements different from or beyond the parameters stated by TI for that component or service voids all express and any implied warranties for the associated TI component or service and is an unfair and deceptive business practice. TI is not responsible or liable for any such statements.

Buyer acknowledges and agrees that it is solely responsible for compliance with all legal, regulatory and safety-related requirements concerning its products, and any use of TI components in its applications, notwithstanding any applications-related information or support that may be provided by TI. Buyer represents and agrees that it has all the necessary expertise to create and implement safeguards which anticipate dangerous consequences of failures, monitor failures and their consequences, lessen the likelihood of failures that might cause harm and take appropriate remedial actions. Buyer will fully indemnify TI and its representatives against any damages arising out of the use of any TI components in safety-critical applications.

In some cases, TI components may be promoted specifically to facilitate safety-related applications. With such components, TI’s goal is to help enable customers to design and create their own end-product solutions that meet applicable functional safety standards and requirements. Nonetheless, such components are subject to these terms.

No TI components are authorized for use in FDA Class III (or similar life-critical medical equipment) unless authorized officers of the parties have executed a special agreement specifically governing such use.

Only those TI components which TI has specifically designated as military grade or “enhanced plastic” are designed and intended for use in military/aerospace applications or environments. Buyer acknowledges and agrees that any military or aerospace use of TI components which have ***not*** been so designated is solely at the Buyer's risk, and that Buyer is solely responsible for compliance with all legal and regulatory requirements in connection with such use.

TI has specifically designated certain components as meeting ISO/TS16949 requirements, mainly for automotive use. In any case of use of non-designated products, TI will not be responsible for any failure to meet ISO/TS16949.

Products		**Applications**	
Audio	www.ti.com/audio	Automotive and Transportation	www.ti.com/automotive
Amplifiers	amplifier.ti.com	Communications and Telecom	www.ti.com/communications
Data Converters	dataconverter.ti.com	Computers and Peripherals	www.ti.com/computers
DLP® Products	www.dlp.com	Consumer Electronics	www.ti.com/consumer-apps
DSP	dsp.ti.com	Energy and Lighting	www.ti.com/energy
Clocks and Timers	www.ti.com/clocks	Industrial	www.ti.com/industrial
Interface	interface.ti.com	Medical	www.ti.com/medical
Logic	logic.ti.com	Security	www.ti.com/security
Power Mgmt	power.ti.com	Space, Avionics and Defense	www.ti.com/space-avionics-defense
Microcontrollers	microcontroller.ti.com	Video and Imaging	www.ti.com/video
RFID	www.ti-rfid.com		
OMAP Applications Processors	www.ti.com/omap	**TI E2E Community**	e2e.ti.com
Wireless Connectivity	www.ti.com/wirelessconnectivity		

Mailing Address: Texas Instruments, Post Office Box 655303, Dallas, Texas 75265
Copyright © 2013, Texas Instruments Incorporated

Mouser Electronics

Authorized Distributor

Click to View Pricing, Inventory, Delivery & Lifecycle Information:

Texas Instruments:

ADC084S101CIMM ADC084S101CIMM/NOPB ADC084S101CIMMX ADC084S101CIMMX/NOPB